Service Kit Catalogue

2022



GRUNDFOS

Table of contents

1. Introduction 8
Grundfos Product Center 8
Shaft seal 9
Overview of service offerings 10
Introduction to recommended spare parts 10

2. AC 11
50 Hz 11

3. AP, APG 13
AP10 13
AP30 16
AP51 19
AP65 21
AP70 24
AP80 28
AP100 32
AP130 36
APG 38
APG 42

4. BMP 44
50/60 Hz 44

5. BMS 53
BMShs system 53
BMShs 17 pump 55
BMShs 30 pump 57
BMShs 46/60 pump 59

6. Booster modules 61
BM, BMB 4" 61
BM, BMB 6", 8" 63
BME, BMET, BMEX 69

7. CH, CHN, CHI, CHIU, CHIE 73
CH, CHN 2, CH, CHN 4 73
CH 8, CH 12 75
CHI, CHIE 2, 4 77
CHI, CHIE 8, 10, 12 79
CHIU 2, 4 81
CHI 15, 20 83

8. CHK, CHV 85
CHK 2 85
CHK 4 87
CHV 2 89
CHV 4 91

9. CLM, CDM, CLP 93
CLM, CDM, CLP 93

10. CM, CME and Boosters 96
CM, CME 96
CM Self priming 102
CME Booster 104
CM Booster PT, PS 106
CMB PM1, CMB PM2 106

11. CMV 109
50/60 Hz 109

12. CP 111
CP 2 111
CP 3 113
CP 8 115

13. CR 117
CR, CRI, CRN 1, 3 117
CR 2 121
CR 4 124
CR, CRI, CRN 5 127
CR 8 133
CR, CRI, CRN 10 135
CR, CRI, CRN 15 141
CR 16 147
CR, CRI, CRN 20 149
CR 30 155
CRN 30 160
CR, CRN 32 162
CR, CRN 32, model B 166
CR, CRN 32, model B 170
CR, CRN 45 173
CR, CRN 45, model B 177
CRN 60 184
CR 60 186
CR, CRN 64 190
CR, CRN 64, model B 194
CR, CRN 90 199
CR, CRN 90, model B 203
CR, CRN 120, 150 208

14. CR Air-cooled top 214
50/60 Hz 214
CR, CRI, CRN 1, 3, 5 214
CR, CRI, CRN 10, 15, 20 216
CR, CRI, CRN 32, 45, 64, 90 219
CR, CRI, CRN 32, 45, 64, 90, model B 222
CR, CRI, CRN 32, 45, 64, 90, model B 225

15. CR Back to back 227
50/60 Hz 227
CR, CRI, CRN 1, 3, 5 227
CR, CRI, CRN 10, 15, 20 229
CR, CRI, CRN 32, 45, 64, 90 231
CR, CRI, CRN 32, 45, 64, 90, model B 233

16. CR CRT 238
CRT 2 238
CRT 4 242
CRT 8 246
CRT 16 251

17. CR HS 256
CRNE 1, 3-23 HS 256

18. CR MAGdrive 258
CR, CRI, CRN 1-90 258

19. CR (S) 263
CR, CRI, CRN 1 (S) 263
CR, CRI, CRN 2 (S) 266
CRN 4 (S) 268
CRN 8 (S) 270
CRN 16 (S) 272

20. CR SF 274
CRN 2 SF 274
CRN 4 SF 276
CRN 5 SF 278
CRN 8 SF 280
CRN 10 SF 282
CRN 15, 20 SF 284
CRN 16 SF 287
CR, CRN 90 SF 289

21. CR Tandem 291
CR, CRI, CRN 1, 3, 5 291
CR, CRI, CRN 10, 15, 20 293
CR, CRI, CRN 32, 45, 64, 90 295
CR, CRI, CRN 32, 45, 64, 90, model B 297

22. CRK, CRKI 300
CRK, CRKI 2 300
CRK, CRKI 4 303
CRK 8 306
CRK 16 308
CRK 30 310
CRK 60 312

23. Dosing and disinfection. 314
SMART Digital S 314
SMART Digital XL 317
DME 321
DDI 334
DMI 341
DMH 345
DMX 351
Accessories for dosing pumps 357
Service tools for dosing pumps 358
Vaccuperm system 359
Oxiperm Pro OCD-162 363
Oxiperm system 367
Selcoperm system 372
Polydos 376
Measurement & control 377

24. DP, EF 383
50/60 Hz 383

25. DP, EF AUTOADAPT. 392
50 Hz 392

26. DW (APB) 401
50 Hz 401

27. DWK 413
DWK.O 413
DWK.E 422
DWK.H 428
DPK 434
DPK.V 441

28. GT Tanks. 450
GT-U 10 bar, coated steel flange 450
GT-U 16 bar, coated steel flange 450
GT-U 25 bar, coated steel flange 450
GT-U 10 bar, stainless steel flange 450
GT-U 16 bar, stainless steel flange 450

29. HS 452
HS, with sleeve 452
HS, without sleeve 470

30. HSX 483
50/60 Hz 483

31. Hydro Multi-B 494
50/60 Hz 494

32. Hydro Multi-E 496
50/60 Hz 496

33. Hydro Solo E / S 498
50 Hz 498

34. Jet pumps & boosters 500
JP pumps 500
JP Boosters 502
JP 5, JP 6 504
JP 5, JP 6 507
JP 5, JP 6 Booster 510
JPC, JPC PM 513
JPBasic, JPBasic Boosters, JPA, JPA PT, JPA PM 515
JDBasic, JDBasic Boosters, JPD, JPD PT 519
JP PS USA (new models) 521
Jet booster USA (previous models) 523

35. KPC 530
KPC 24/7, 300A, 600A 530

36. KPL KWM 534
50/60 Hz 534
KPL 500 534

KPL 600 537
KPL 650 539
KPL 700 542
KPL 800 546
KPL 900 550
KPL 1000 555
KPL 1200 560
KPL 1400 564
KPL 1500 569
KWM 600 574
KWM 700 577
KWM 800 582
KWM 900 586
KWM 1000 590
KWM 1200 595

37. LM, LME, LMD, LMDE 601
50/60 Hz, Models C, D 601
50/60 Hz, Models C, D 604

38. LP, LPE, LPD, LPDE 606
50/60 Hz, Models C, D 606

39. LS 612
LS, with sleeve 612
LS, without sleeve 641
LS, double-stage 666

40. MAGNA 671
MAGNA1 plug-connected versions 671
NAMREG MAGNA1 677
MAGNA1 terminal-connected versions 679
NAMREG MAGNA1 terminal-connected versions 685
MAGNA3 plug-connected versions 687
NAMREG MAGNA3 w. conduit box 691
MAGNA3 terminal-connected versions 693
NAMREG MAGNA3 terminal-connected versions 703
Model E 706

41. MG, ML 710
Model F/H 710

42. MGE model H/I 717
MGE 71, MGE 80, MGE 90 717

43. MGE model J 727
MGE 100, MGE 112, MGE 132, MGE 160 727

44. MGE, MLE 737
Model F 737

45. Mixers and flowmakers 739
AMD 739
AMG 757
AFG 789
SMD 826
SMG 833
SFG 858

46. MMS 888
MMS 6 888
MMS 6000 894
MMS 8000 902
MMS 10000 908
MMS 12000 912

47. MQ, RMQ 915
MQ 915
RMQ 923

48. MS 925
MS 402 925
MS6 927
MS 4000 933
MS 6000 935

49. MTA, MTAD 937
MTA 30, 60, 90, 120, 200, 20H, 40H, 70H, 100H 937

50. MTB 940
50/60 Hz 940

51. MTH/MTC 942
MTH/MTC 2, 4 942
MTH, MTC 8, 12, 16 944

52. MTR 946
MTR 1s, 1, 2, 3, 4, 5 and 8 (50/60 Hz) 946
MTR 1s, 1, 2, 3, 4, 5 and 8 with drainage back to tank(50/60 Hz) 950
MTR 10, 15 and 20 954
MTR 10, 15 and 20 with drainage back to tank . 957
MTR 32, 45 and 64 960

53. MTS 968
MTS, model A 968
MTS, model C 972

54. MULTILIFT 974
M 974
MD 976
MSS 978
MLD 980

55. NB 982
Model B 982

56. NBG 1016
Model B 1016

57. NBS, NBSE (60 Hz) 1053
Overview of service kits and spares 1053
Nameplate 1053
Type key 1054

58. Service kits and spares 1058
Kit - Pump housing 1058
Kit/spare - Wear ring 1060
Kit - Nut, washer and key for impeller 1062
Spare - Impeller 1064
Spare/bulk - Shaft seal and spacer 1072
Spare/bulk - O-ring for cover and seal cover . . . 1075
Kit/spare - Cover 1078
Kit - Seal cover 1080
Kit - Flushing line 1082
Spare - Flow control adapter 1082
Kit - Shaft 1083
Spare - Key, coupling (pump side) 1085
Kit - Split coupling 1085
Kit - Motor stool 1087
Kit - Coupling guards 1088
Pump nameplate 1090
Kit - Plugs for seal cover and motor stool 1090
Kit - Fork tool (positioning tool for pump shaft) . 1091
Kit - Loose flange 1091
Kit - Support rails under pump 1092
Kit - Support rails under motor 1094
Kit - Sensor for NBSE Series 2000 1096

59. Exploded drawings 1097

60. NK 1100
Model A 1100
Model B 1102
Shaft seal 1103
Shaft seal 1106
Spacer ring for shaft seal 1109
Spacer ring 1109
O-ring 1111
Stuffing box, shaft sleeve and gland 1114
Stuffing box, shaft guard and pipe 1118
Shaft, bearings, spacer ring and V-ring 1120
Wear ring 1124
Impeller 1128
Nut, washer and key for impeller 1128
Coupling 1130
Flender standard coupling 1152
Sensor for NKE Series 2000 1167

61. NKG 1169
Model B 1169

62. NKX 1232
50/60 Hz 1232

63. NM, NME, DNM, DNME 1237
Model A, 50 Hz 1237

64. NP, NPE, DNP, DNPE 1241
Model A, 50/60 Hz 1241

65. NS, PF 1246
NS 1246
PF 1254

66. PM, PM Rain 1256
Pressure Manager 1256
PM Rain 1258

67. RC 1260
50/60 Hz 1260

68. RCME 1263
50/60 Hz 1263

69. S pumps 1265
Ranges 34 and 42 1265
Range 46 1269
Ranges 50 and 54 1272
Ranges 58 and 62 1280
Ranges 66 and 70 1287
Range 72 1297
Ranges 74 and 78 1301

70. SB, SBA 1307
SB 1307
SBA 1309

71. SCALA1 1311
230 V 50/60 Hz 1311

72. SCALA2 1316
50/60 Hz 1316

73. SE, SL 1318
50/60 Hz (DIN and US) 1318

74. SE 1328
SE1, SEV 1328

75. SEG 1340
50 Hz/ 60 Hz / 60 Hz US 1340

76. SEG Autoadapt 1352
50 Hz 1352

77. SEN 1360
Ranges 34 and 42 1360

Ranges 50 and 54 1366

78. Sensor 1372
Grundfos Direct Sensor 1372

79. SL 1374
SL1, SLV 1374
SL 1, SLV AUTOADAPT 1384

80. Sololift+ 1388
WC, WC-1, WC-3 1388
CWC-3, C-3 1392
D-3, PWC-3 1395

81. Sololift2 1398
50 Hz 1398
WC-1, WC-3, CWC-3 1398
C-3, D-2 1402

82. SP 1406
SP 1A, 2A model A 1406
SP 1A, 1.5A, 2A model A 1408
SP 3A, 5A model A 1410
SP 8A (N) (NE) (R) model A 1414
SP 11A, 14A model A 1416
SP 7, 9, 11, 14 1418
SP 17 model A 1420
SP 17 model B 1422
SP 30 model A 1424
SP 30 model B 1426
SP 46 model A 1428
SP 46 model B 1430
SP 60 model A 1432
SP 60 model B 1434
SP 77 model C, SP 95 model B 1436
SP 125 model C, D 1438
SP 160 model A, B 1440
SP 215 model B, C 1442

83. SPK 1444
SPK 1, 2, 4 1444
SPK 8 1446

84. SPO 1448
SPO 3, SPO 5 1448

85. SQ, SQE 1452
SQ, SQE, SQE-NE 1452

86. SQFlex 1458
SQF 3A (N), 16 SQF 1458
SQF 5A, 8A (N), 25, 40 SQF 1460
SQF 14A (N), 75 SQF 1464

87. SRG 1472
SRG.xx.30 and SRG.35.50 (50/60 Hz) - SRG.xx.12 and SRG.48.20 (60 Hz, North America) 1472
SRG.50 - 100.50/80 and SRG.130.80 (50 Hz), SRG.50 - 130.50/80 (60 Hz SI), SRG.68 - 175.20/32 (60 Hz, North America) 1478
SRG.120.80.323.11.5.1B and SRG.150 - 240.80 (50/60 Hz) and SRG.200 - 320.32 (60 Hz North America) 1484

88. SRP 1488
Impeller diameter 30/12 1488
Impeller diameter 50/20 1495
Impeller diameter 80/32 1507

89. TP, TPE, TPD, TPED 1521
TP Series 100 and 200 1521
TP Series 300 1526
TP Series 400 1538
TP Series 400 1544

90. TPE2, TPE2 D, TPE3, TPE3 D 1546
50/60 Hz 1546

91. UMT, UMTD, UPT, UPTD 1550
UMT, UPT 1550
UMTD, UPTD 1552

92. Unilift 1554
Unilift AP12, 35, 50 1554
Unilift AP35B, AP50B 1556
Unilift CC 5, 7, 9 1558
Unilift KP 1563

93. UPE, UPED 1568
UPE small 1568
Models A, B, C 1570
Model E 1572

94. WL, SWL 1574
50/60 Hz 1574

95. Recommended spare parts: AMD, AMG, AFG, SRP 1585
50/60 Hz 1585

96. Recommended spare parts: AP, APG . . . 1586
50/60 Hz 1586

97. Recommended spare parts: BM, BME, BMET 1587
BM 1587
BME, BMET 1588

98. Recommended spare parts: CM, CME . . 1589
50/60 Hz 1589
Pump and motor 1589

99. Recommended spare parts: CR, CRI, CRN 1 to 150 1590
50/60 Hz 1590

100. Recommended spare parts: DP, EF AUTOADAPT 1591
50/60 Hz 1591

101. Recommended spare parts: DW 1592
50/60 Hz 1592

102. Recommended spare parts: DWK, DPK 1593
50/60 Hz 1593

103. Recommended spare parts: KPL, KWM 1594
50/60 Hz 1594

104. Recommended spare parts: LS. 1595
50/60 Hz 1595

105. Recommended spare parts: NB, NBG, NK, NKG 1596

106. Recommended spare parts: S pumps . . 1598
50/60 Hz 1598

107. Recommended spare parts: SE, SL 9-30 kW 1599
50/60 Hz 1599

108. Recommended spare parts: SEG 1600
50/60 Hz 1600

109. Recommended spare parts: SE1/SEV and SL1/SLV 1.1 to 11 kW 1601
Recommended spare parts 1601

110. Recommended spare parts: SL1, SLV 0.9-1.5 kW 1602
50/60 Hz 1602

111. Recommended spare parts: SMD, SMG, SFG, SRG 1603
50/60 Hz 1603

112. Recommended spare parts: SP 17, 30, 46, 60, 77, 95, 125, 160, 215 1604
50/60 Hz, Model B 1604

113. Recommended spare parts: SRP 1606
50/60 Hz 1606

114. Recommended spare parts: TP, TPE, TPD, TPED 1607
50/60 Hz, Series 100/200 1607
50/60 Hz, Series 300 1608

115. Recommended spare parts: TPE2, TPE2 D, TPE3, TPE3 D 1609
50/60 Hz 1609

1. Introduction

Grundfos Product Center

Online search and sizing tool to help you make the right choice.
From the international view, you can select your specific country to view the product range available to you.
International view: *https://product-selection.grundfos.com*

All the information you need in one place

Performance curves, technical specifications, pictures, dimensional drawings, motor curves, wiring diagrams, spare parts, service kits, 3D drawings, documents, system parts. The Product Center displays any recent and saved items - including complete projects - right on the main page.

Downloads

On the product pages, you can download installation and operating instructions, data booklets, service instructions, etc., in PDF format.



When you select your country, you will see the menus below. Note that some menus may not be available depending on the country.
Example: *https://product-selection.grundfos.com/uk*

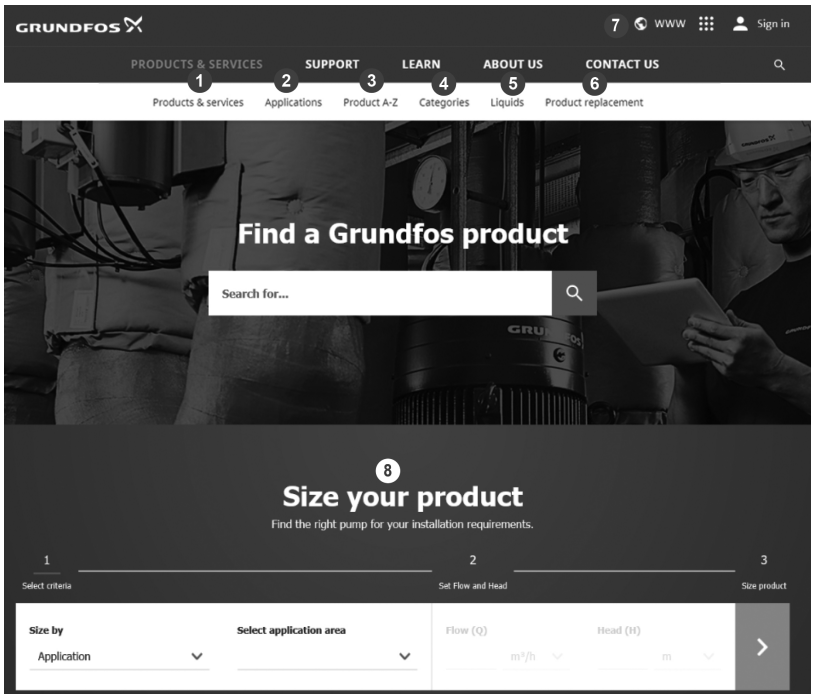

Pos.	Description
1	**Products & services** enables you to find products and documents by typing a product number or name into the search field.
2	**Applications** enables you to choose an application to see how Grundfos can help you design and optimise your system.
3	**Products A-Z** enables you to look through a list of all the Grundfos products.
4	**Categories** enables you to look for a product category.
5	**Liquids** enables you to find pumps designed for aggressive, flammable or other special liquids.
6	**Product replacement** enables you to find a suitable replacement.
7	**WWW** enables you to select the country, which changes the language, the available product range and the structure of the website.
8	**Sizing** enables you to size a product based on your application and operating conditions.

Shaft seal

The stamping code (variant code) of mechanical shaft seals is stamped on the pump nameplate. Indicated in the last position of the type designation, the stamping code consists of four letters.

Example	
Grundfos type designation (1)	A
Material of rotating face (2)	U
Material of stationary seat (3)	U
Material of secondary seal (4)	E

Position 1 codes

Position 1 of the mechanical shaft seal variant code shows the Grundfos type designation.

The following codes can be shown in position 1:

Code	Designation
A	O-ring seal with fixed seal driver
B	Bellows seal, rubber
C	O-ring seal with spring as seal driver
D	O-ring seal, balanced
E	O-ring seal, type A, cartridge
F	Bellows seal, type B, cartridge
G	Bellows seal, type B, with reduced seal faces
H	O-ring seal, type D, cartridge
K	Bellows seal, metal, type M, cartridge
M	Bellows seal, metal
O	Double seal, back-to-back
P	Double seal, tandem
Q	Seal with flush, quench seal
R	O-ring seal, type A, with reduced seal faces
S	Stuffing box
T	Floating gap seal
X	Miscellaneous

Positions 2 and 3 codes

Positions 2 and 3 of the mechanical shaft seal variant code show materials of rotating face and stationary seat.

The following codes can be shown in positions 2 and 3:

Code	Material	
A	Synthetic carbon	Carbon, metal-impregnated
B		Carbon, resin-impregnated
H (B/U)		Carbon with embedded tungsten carbide (hybrid)
C		Other carbons
D	Metals	Steel
N		Bronze
S		Cast chromium steel
U	Carbides	Tungsten carbide, chromium-nickel-molybdenum-bonded
Q		Q_1^S: Dense, sintered, fine-grained silicon carbide (SiC)
		Q_1^P: Porous, sintered, fine-grained silicon carbide (SiC)
		Q_1^G: Graphite-containing, sintered silicon carbide (SiC)
V	Metal oxides	Ceramic (aluminium oxide)

Position 4 codes

Position 4 of the mechanical shaft seal variant code shows the secondary seal material.

The following codes can be shown in position 4:

Code	Material
E	EPDM
F	FXM (Fluoraz®)
V	FKM (Viton®)
K	FFKM (Kalrez®)
M	PTFE-sheathed O-ring
P	NBR (nitrile rubber)
S	Q (silicone rubber)
T	PTFE (Teflon®)
X	Other elastomers

Overview of service offerings

To provide an easy and logical overview of our service products, we have divided them into five portfolios. Each portfolio contains relevant service solutions and individual service products.

All of the service products included under the portfolios below may be purchased individually as and when needed from Grundfos Service & Solutions locally. Furthermore, our Authorised Service Partner network helps us to secure a dependable and global delivery of Service Products.

Spare Parts & Service Kits



Includes recommended spare parts and service kits for all Grundfos products as well as various logistics options. It is the perfect one-stop solution for customers who want to perform pump repair and maintenance work themselves.

Repair & Maintenance



Includes analysis, maintenance, repair, and adjustment offerings that keep pump installations running at peak performance.

Installation & Operation



Includes solutions that ensure trouble-free and correct installation, commissioning, and operation of pump systems including 3 levels of service contracts.

Optimisation & Consultancy



Includes optimisation and consultancy services that help our customers save energy, thereby reducing their operational costs and benefitting the environment. They provide a strong foundation for making decisions about installation optimisation measures and/or pump replacement.

Surveillance & Mobility



Includes monitoring solutions that provide the customer with up to date and accurate information on pump installation performance and facilitate early detection of potential problems and opportunities for optimisation and improvement.

Introduction to recommended spare parts

Spare parts are the best way of prolonging pump service life and saving money. Based on our considerable experience of what parts will be needed to ensure optimal pump reliability in the short and long term, they are available for most Grundfos pumps.

In the back of this catalogue you will find what spare parts we recommend for 2 & 5 years of operation to keep your system running.

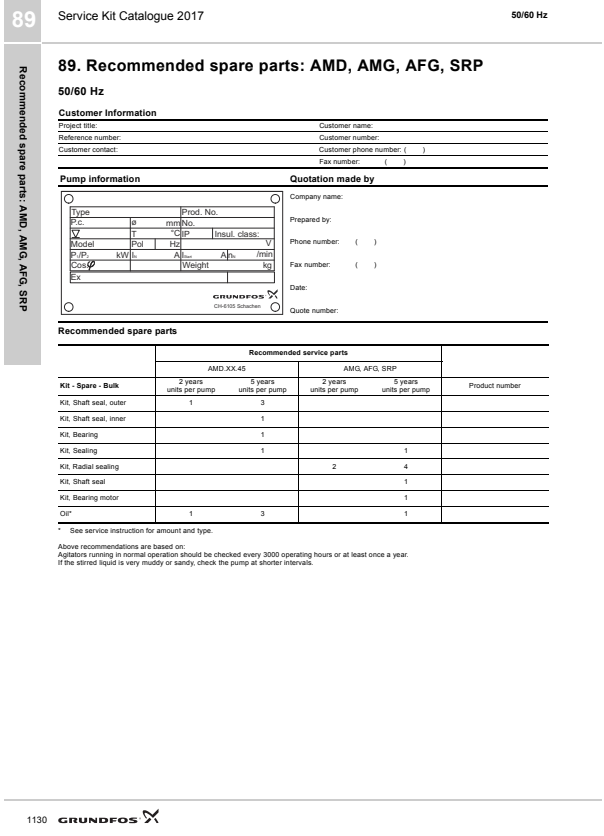

89 Service Kit Catalogue 2017 50/60 Hz

Recommended spare parts: AMD, AMG, AFG, SRP

89. Recommended spare parts: AMD, AMG, AFG, SRP

50/60 Hz

Customer Information

Project title:	Customer name:
Reference number:	Customer number:
Customer contact:	Customer phone number: ( )
	Fax number: ( )

Pump information

Type			Prod. No.		
P.c.	ø	mm	No.		
V	T	°C	IP	Insul. class:	
Model	Pol	Hz			V
P_1/P_2	kW	I_n	A	I_{Ch} A	h_n /min
Cos φ			Weight		kg
Ex					

GRUNDFOS CH-6105 Schachen

Quotation made by

Company name:

Prepared by:

Phone number: ( )

Fax number: ( )

Date:

Quote number:

Recommended spare parts

	Recommended service parts				
	AMD.XX.45		AMG, AFG, SRP		
Kit - Spare - Bulk	2 years units per pump	5 years units per pump	2 years units per pump	5 years units per pump	Product number
Kit, Shaft seal, outer	1	3			
Kit, Shaft seal, inner		1			
Kit, Bearing		1			
Kit, Sealing		1		1	
Kit, Radial sealing			2	4	
Kit, Shaft seal				1	
Kit, Bearing motor				1	
Oil*	1	3		1	

* See service instruction for amount and type.

Above recommendations are based on:
Agitators running in normal operation should be checked every 3000 operating hours or at least once a year.
If the stirred liquid is very muddy or sandy, check the pump at shorter intervals.

1130 GRUNDFOS

TM067997

2. AC

50 Hz

Drain plug

Pos.	Pump type		AC 15, 20, 25, 30
	Kit No		*97637332*
	Description	Material	
7	Drain plug	Composite PP 30 % GF	4
11a	O-ring	EPDM	4

Shaft seal

Pos.		Pump type		AC 15, 20, 25	AC 30
		Kit No		*97637299*	*97637300*
		Description	Material	BBQE	
105	105d	Shaft seal, rotating part	Carbon graphite, stainless steel, EPDM	1	1
	105e	Shaft seal, stationary part	Silicon carbide, EPDM	1	1
	105f	Washer	Stainless steel	1	1

AC

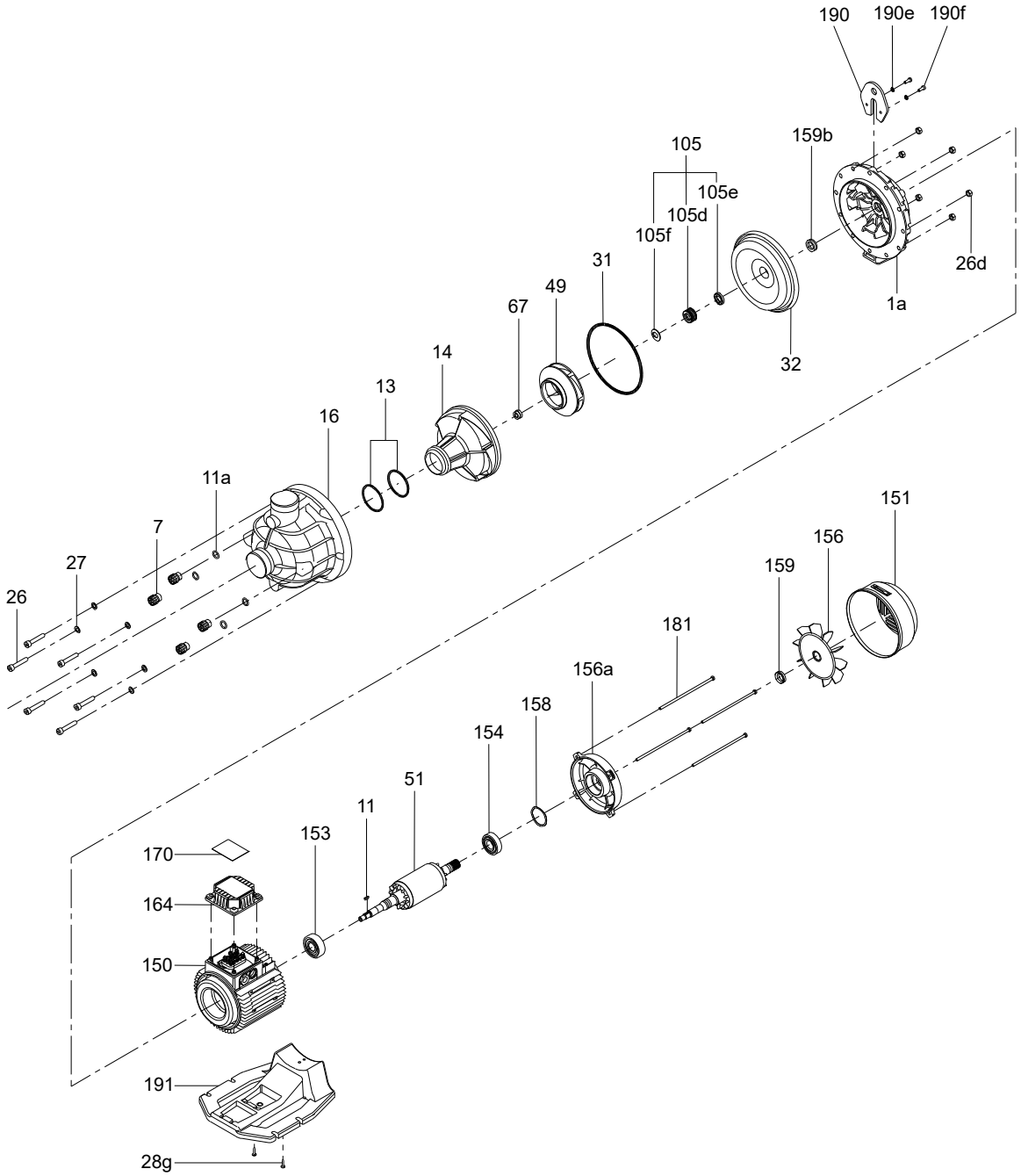
190
190e
190f
159b
105
105e
105d
105f
31
49
67
14
13
16
11a
7
27
26
1a
26d
32
151
156
159
181
156a
158
154
51
11
153
170
164
150
191
28g
TM046307

3. AP, APG

AP10

50 Hz, Models A and B

Wear parts

Pos.	Description
42V/433	1 shaft seal kit complete
412	1 O-ring kit
826	1 cable entry kit

Pump type	Model A	Model B
AP10.50.12.Ex	96003696	96007178
AP10.65.21	96003302	96007164

Oil	
1 litre non-toxic oil, type Shell Ondina 15	96586753

Model A

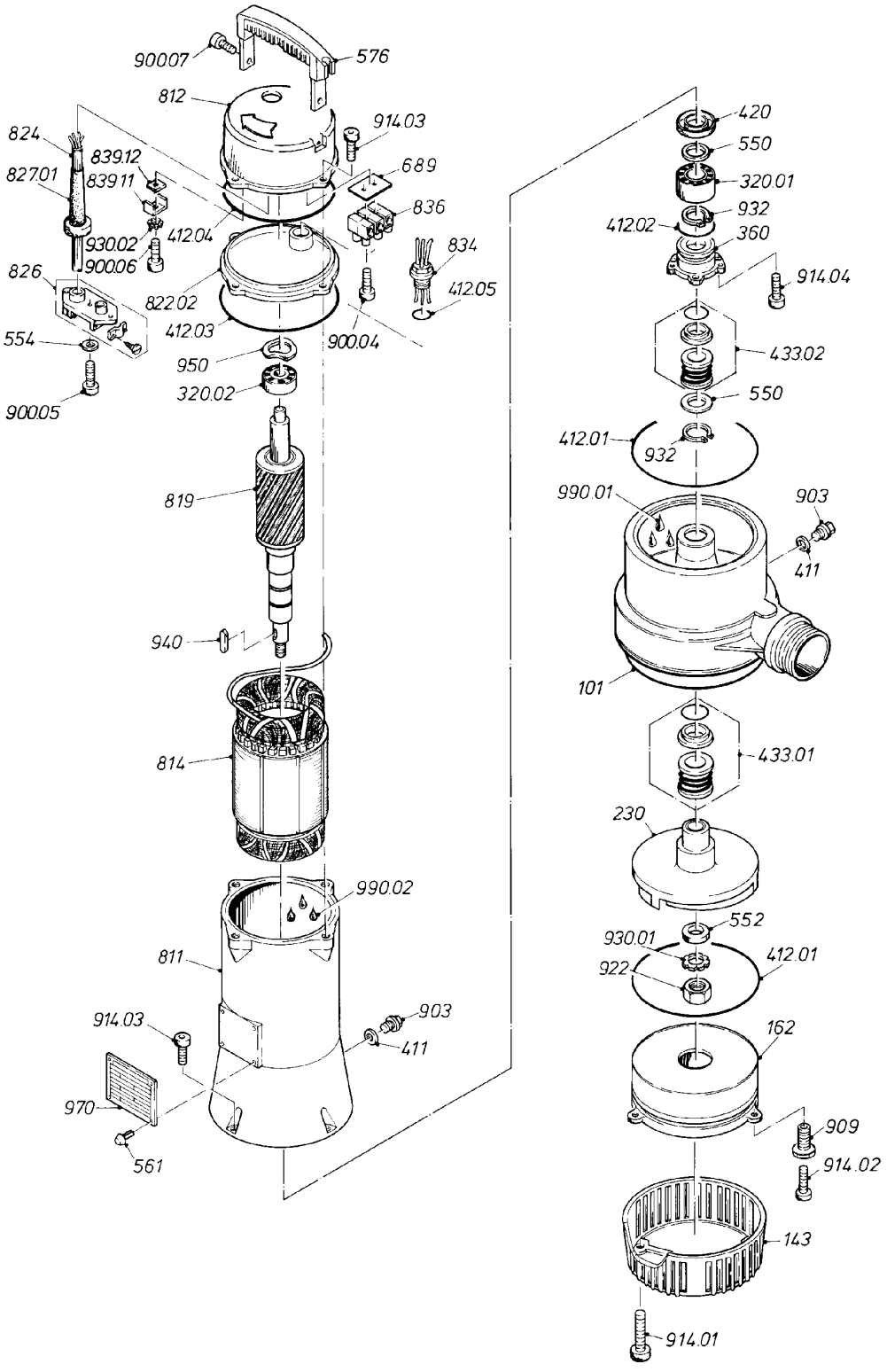
90007
576
812
914.03
824
839.12
827.01
839.11
689
836
930.02
412.04
834
90006
826
822.02
412.05
412.03
900.04
554
950
320.02
90005
819
940
814
990.02
811
914.03
903
411
970
561
420
550
320.01
932
412.02
360
914.04
433.02
550
412.01
932
990.01
903
411
101
433.01
230
552
930.01
412.01
922
162
909
914.02
143
914.01
TM001961

Model B

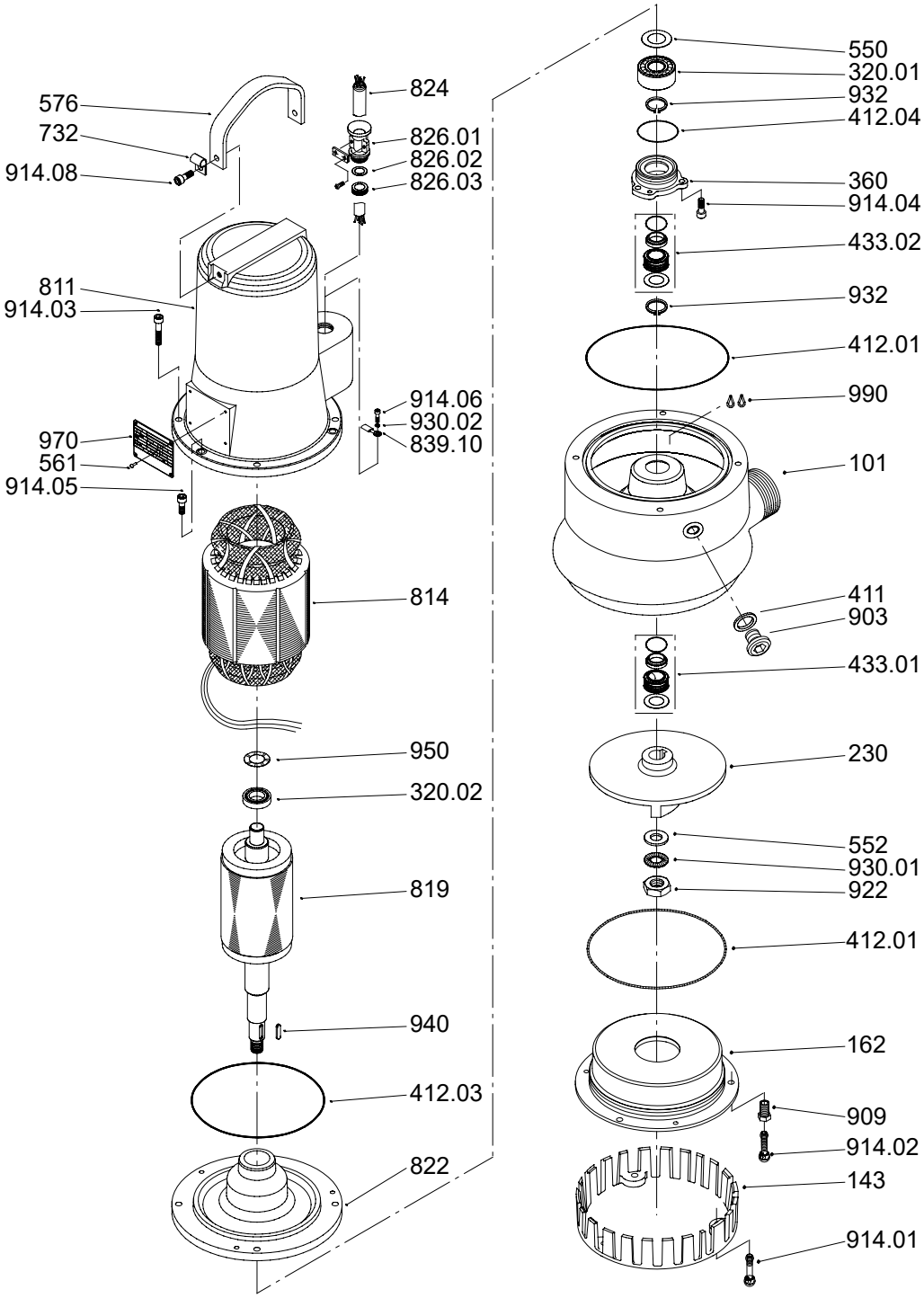

TM012537

AP30

50/60 Hz, Models A and B

Wear parts

Pos.	Description
420/433	1 shaft seal kit complete
412	1 O-ring kit
826	1 cable entry kit

Pump type	Model A	Model B
Non-explosion-proof pumps, 50 Hz	96003300	96003300
Explosion-proof pumps, 50 Hz	96003696	96007178
Non-explosion-proof pumps, 60 Hz	96003300	96003300

Oil	
1 litre non-toxic oil, type Shell Ondina 15	96586753

Model A

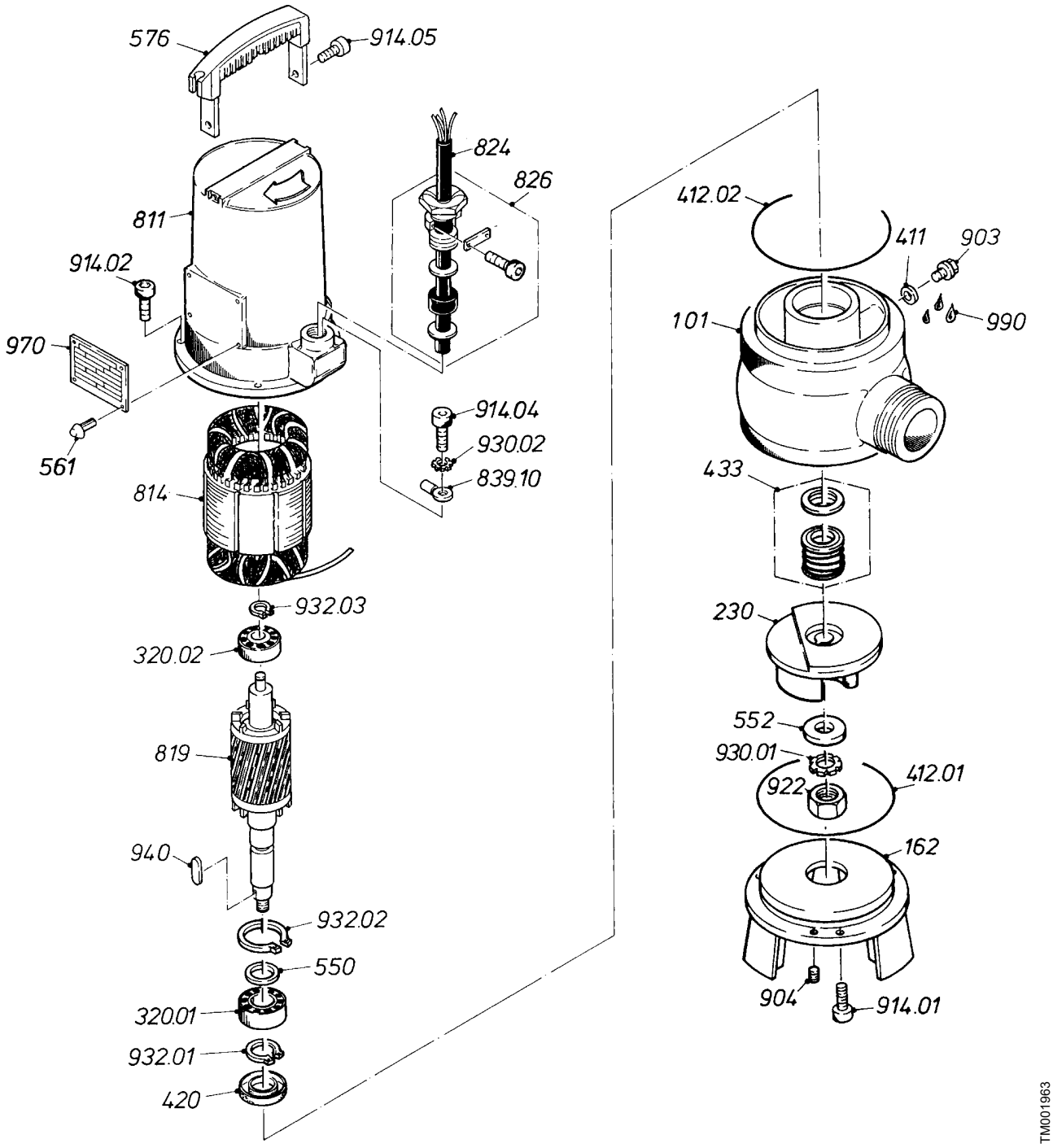
576
914.05
824
826
811
914.02
970
561
914.04
930.02
839.10
814
932.03
320.02
819
940
932.02
550
320.01
932.01
420
412.02
411
903
990
101
433
230
552
930.01
922
412.01
162
904
914.01
TM001963

Model B

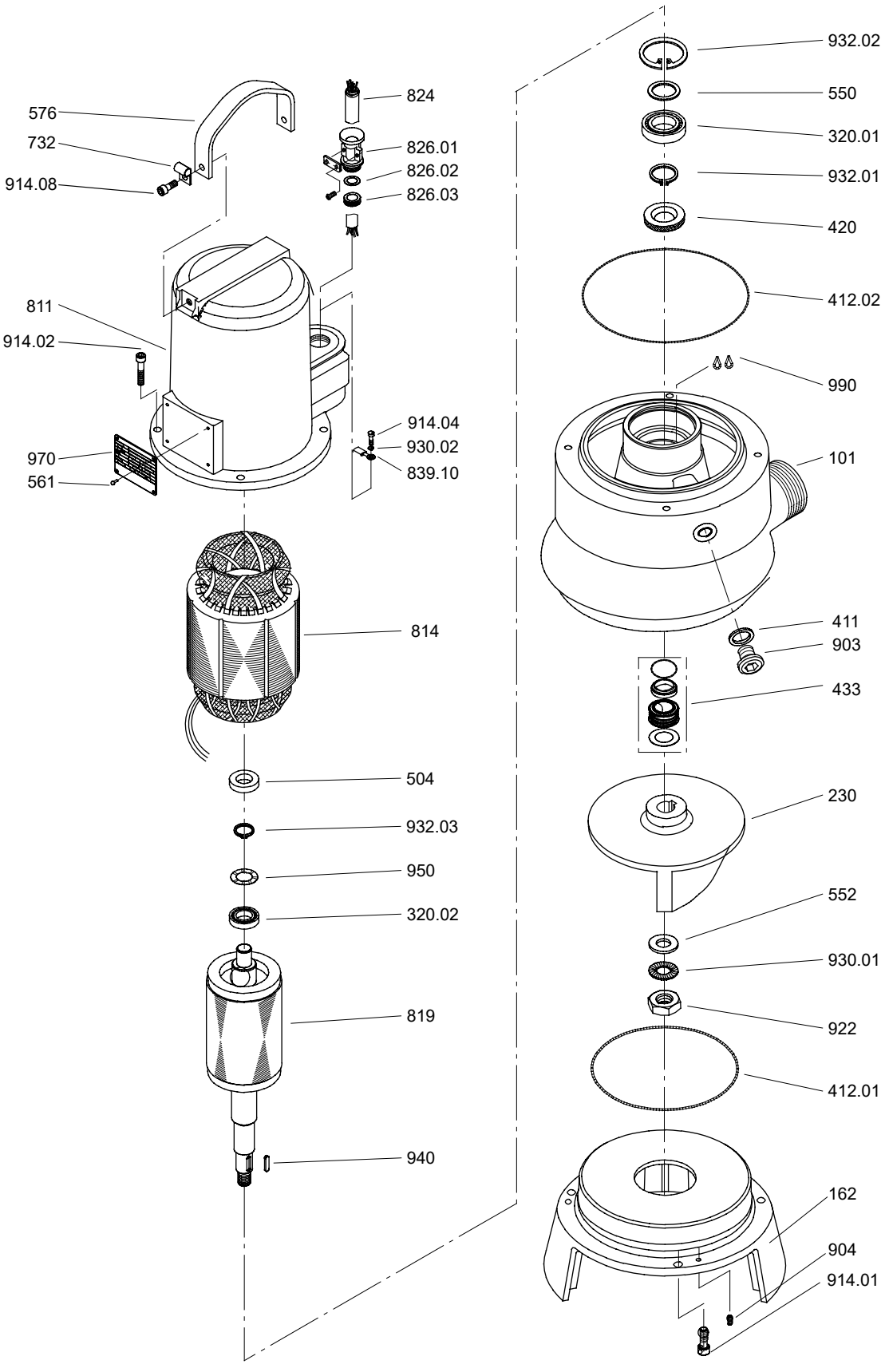
576
732
914.08
824
826.01
826.02
826.03
811
914.02
914.04
930.02
839.10
970
561
814
504
932.03
950
320.02
819
940
932.02
550
320.01
932.01
420
412.02
990
101
411
903
433
230
552
930.01
922
412.01
162
904
914.01
TM012549

AP51

50 Hz

Wear parts

Pos.	Description
420/433	1 shaft seal kit complete
412	1 O-ring kit
826	1 cable entry kit

Pump type	Model A	Model B
50 Hz		
AP51.65.07	96003300	96003300
AP51.65.12	96003300	96003300
AP51.65.17	96003302	96007164
AP51.65.17.3 *	96003692	96007175
AP51.65.22.3	96003302	96007164
AP51.65.22.3 *	96003692	96007175
AP51.65.22.3.EX	96003303	96007165
60 Hz		
AP51.65.09	96003300	96003300
AP51.65.13	96003300	96003300
AP51.65.14	96003300	96003300
AP51.65.15.3	96003300	96003300
AP51.65.15.3 V	96003302	96007164
AP51.65.22	96003302	96007164
AP51.65.23	96003302	96007164
AP51.65.34	96003691	96007164
AP51.65.35	96003691	96007164
AP51.65.36	96003691	96007164

* With temperature sensors in the motor windings.

Oil	
1 litre non-toxic oil, type Shell Ondina 15	96586753

Thermal contact for three-phase motors	
Thermal contact	96005389

Including three thermal switches for 140 °C and tape (class F)

Control box

Product numbers for control boxes include these parts:

AP51.xx.xx.xA:	1 control box
	10 m cable for float switch
	1 float switch.
Other pumps:	1 control box
	(without relays for float switch).

Pump type	Voltage (V)	Control box	Schuko plug	CEE plug
AP51.65.07	1 x 230			
AP51.65.07.A1	1 x 230			
AP51.65.07.A1	1 x 230		•	
AP51.65.07.A3	3 x 400			
AP51.65.07.A3	3 x 230			
AP51.65.07.A3	3 x 400			•
AP51.65.09.1	1 x 230			
AP51.65.09.A1	1 x 230			
AP51.65.12.1	1 x 230			
AP51.65.12.A1	1 x 230			
AP51.65.12.A1	1 x 230		•	
AP51.65.12.A3	3 x 400			
AP51.65.12.A3	3 x 230			
AP51.65.12.A3	3 x 400			•
AP51.65.13.1	1 x 230			
AP51.65.13.A1	1 x 230			
AP51.65.14.1V	1 x 230			
AP51.65.14.A1V	1 x 230			

AP51.65.17-23, model A

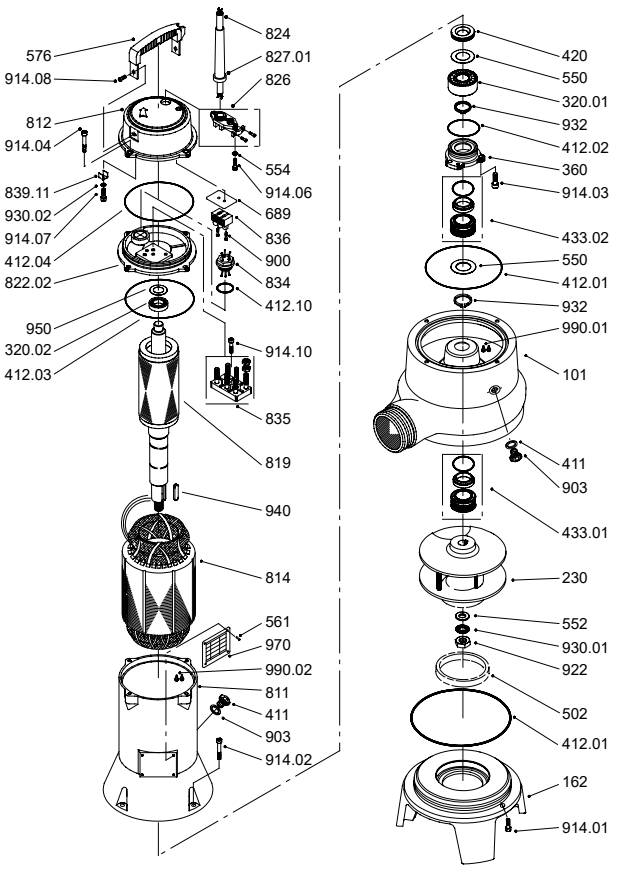

AP51.65.07-12, model B

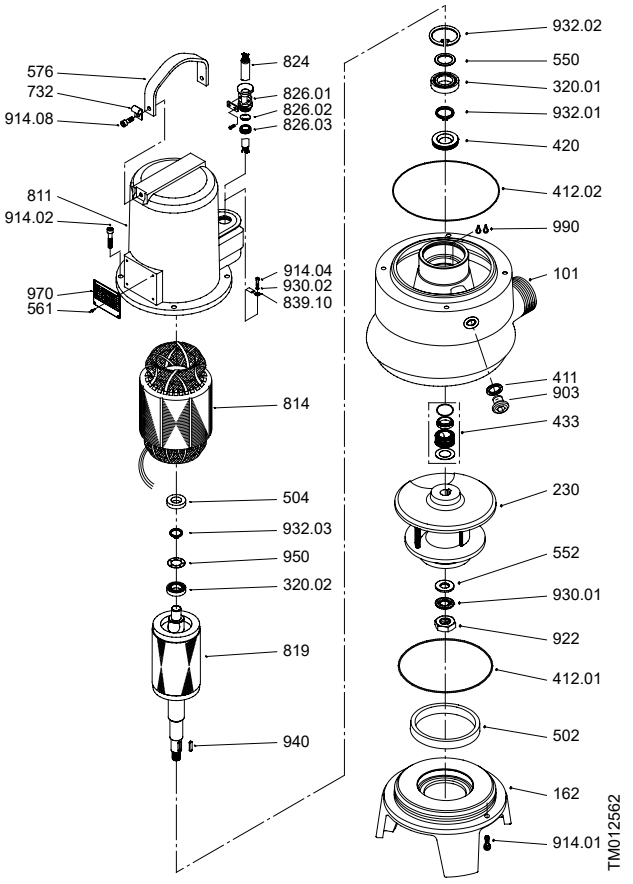

AP51.65.17-22, model B

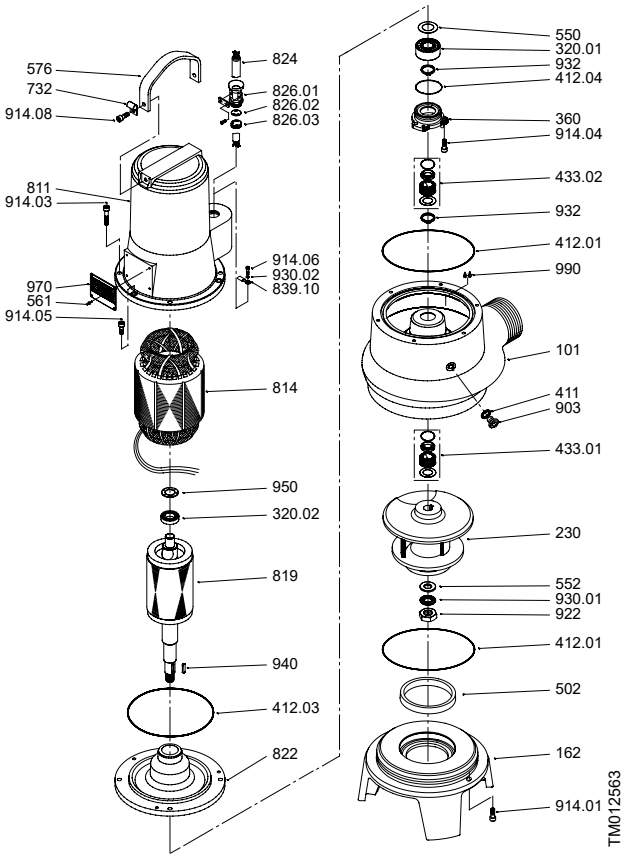

AP65

Wear parts

Pos.	Description
433	1 shaft seal kit complete
412	1 O-ring kit
826	1 cable entry kit

Pump type	Wear parts	
AP65.65.09.1.V	96003300	
AP65.65.09.3.V	96003300	
AP65.65.12.3.V	96003300	
AP65.65.12.1.V	96003300	
	With moisture sensors	**Without moisture sensors**
AP65.100.24.V	96007162	96007162
AP65.100.32.V	96007162	96007162
AP65.100.45.V	96007162	96007162
AP65.100.61.V	96007162	96007162
AP65.100.130.V	96003818	96003817
AP65.100.24.V.Ex	96007162	96007162
AP65.100.32.V.Ex	96007162	96007162
AP65.100.45.V.Ex	96007162	96007162
AP65.100.61.V.Ex	96007162	96007162
AP65.100.130.V.Ex	96003821	96003820

Oil	
1 litre non-toxic oil, type Shell Ondina 15	96586753

Thermal contact for three-phase motors	
Thermal contact	96005389

Including three thermal switches for 140 °C and tape (class F)

Control box

Product numbers of control boxes include these parts:

- 1 control box
- 10 m cable for float switch
- 1 float switch.

Pump type	Voltage (V)	Control box	Schuko plug	CEE plug
AP65.65.09.A1.V	1 x 230		•	
AP65.65.09.A3.V	3 x 230			•
AP65.65.09.A3.V	3 x 400			•
AP65.65.12.A1.V	1 x 230		•	
AP65.65.12.A3.V	3 x 230			•
AP65.65.12.A3.V	3 x 400			•

AP65

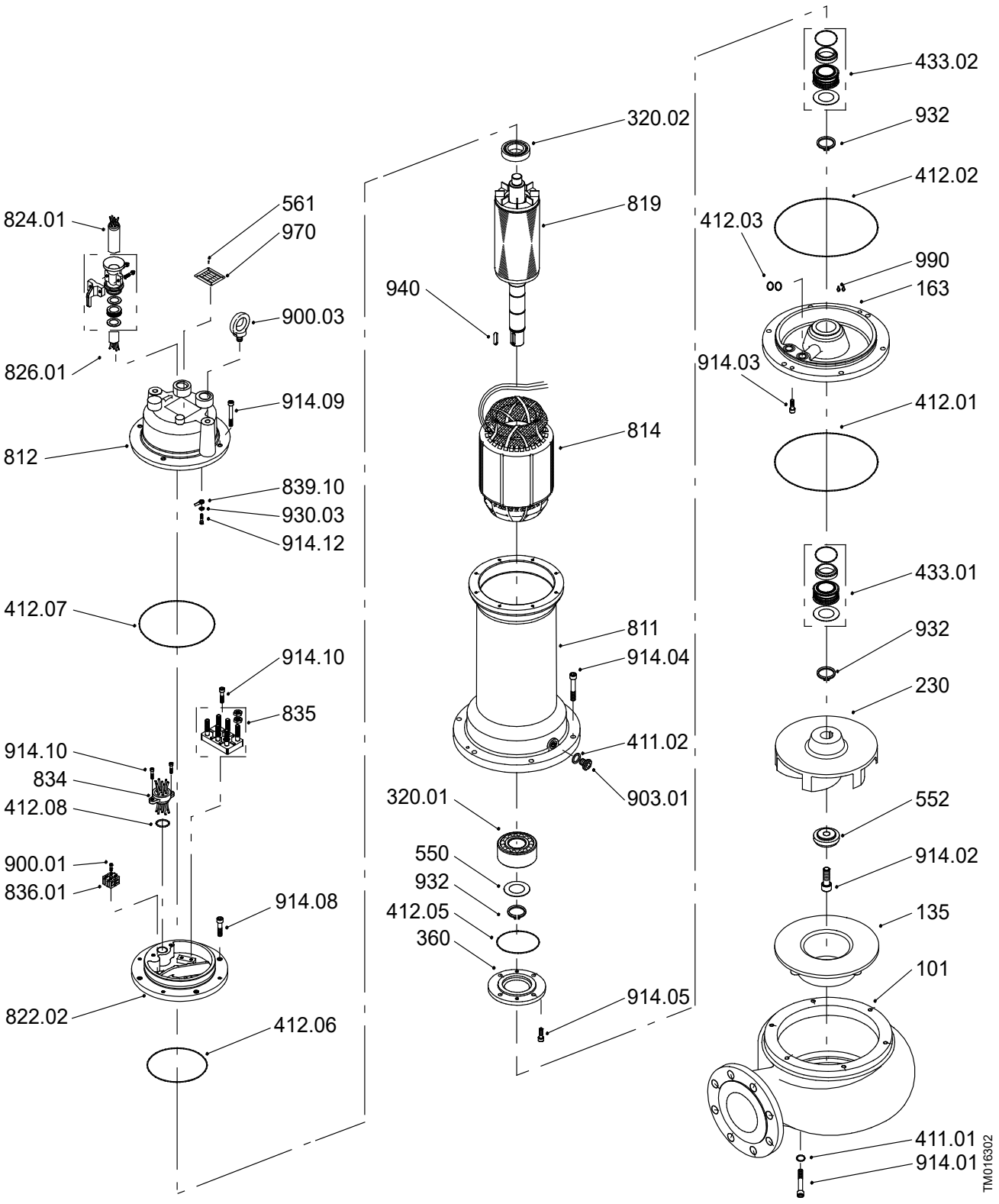
824.01
561
970
900.03
826.01
914.09
812
839.10
930.03
914.12
412.07
914.10
835
914.10
834
412.08
900.01
836.01
914.08
822.02
412.06
320.02
819
940
814
811
914.04
411.02
903.01
320.01
550
932
412.05
360
914.05
433.02
932
412.02
412.03
990
163
914.03
412.01
433.01
932
230
552
914.02
135
101
411.01
914.01
TM016302

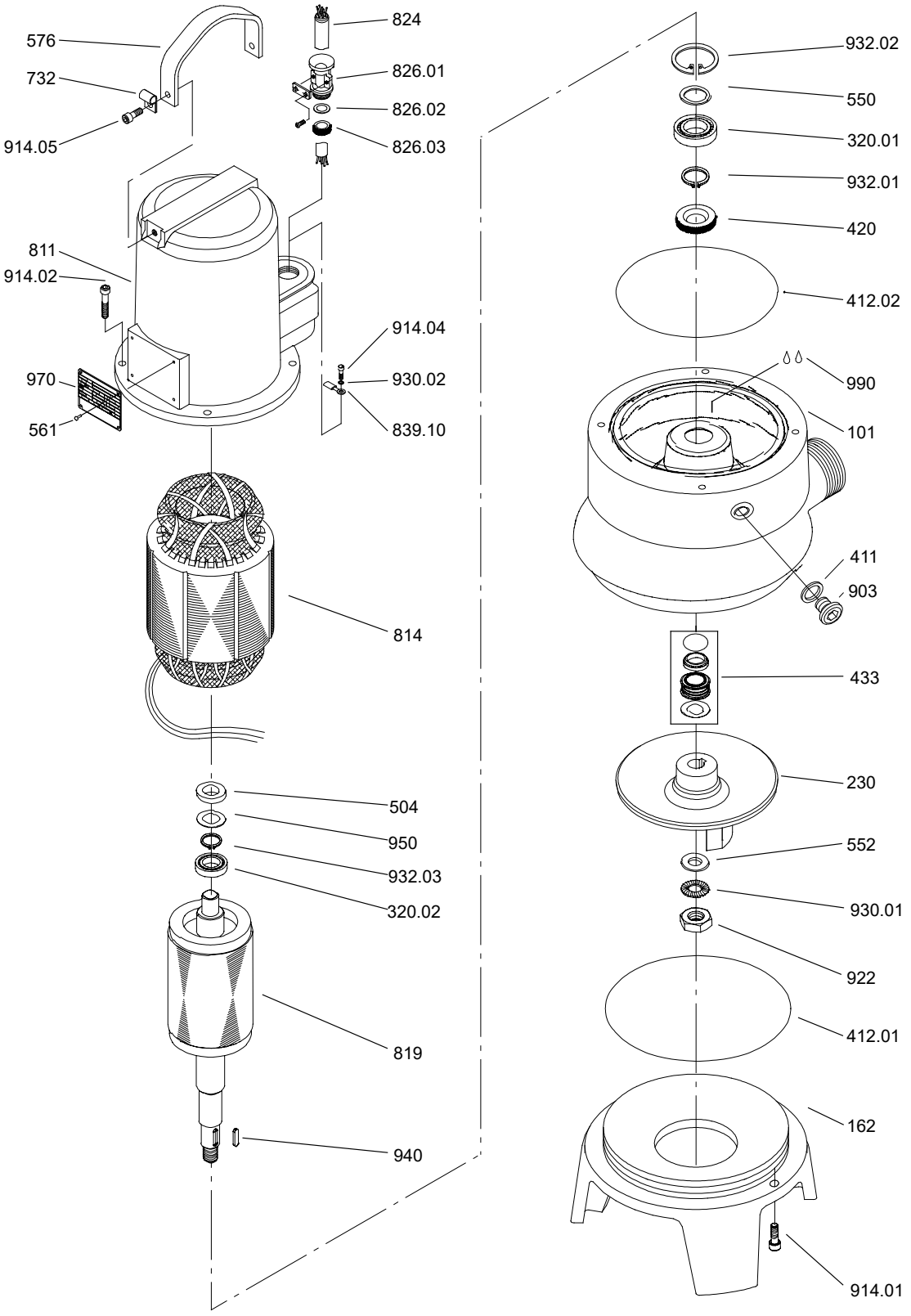
576
732
914.05
824
826.01
826.02
826.03
811
914.02
914.04
930.02
839.10
970
561
814
504
950
932.03
320.02
819
940
932.02
550
320.01
932.01
420
412.02
990
101
411
903
433
230
552
930.01
922
412.01
162
914.01
TM012134

AP70

50 Hz, Models A and B

Wear parts

Pos.	Description
433	1 shaft seal kit complete
412	1 O-ring kit
826	1 cable entry kit

Pump type	Model A	Model B
AP70.80.09.3	96003304	96007166
AP70.80.09.3 *	96003693	96007176
AP70.80.09.3.Ex	96003305	96007167
AP70.80.13.3	96003304	96007166
AP70.80.13.3 *	96003693	96007176
AP70.80.13.3.Ex	96003305	96007167
AP70.80.19.3	96003306	96007168
AP70.80.19.3*	96003694	96007177
AP70.80.19.3.Ex	96003307	96007163
AP70.80.24.3	96003306	96007168
AP70.80.24.3 *	96003694	96007177
AP70.80.24.3.Ex	96003307	96007163

* With temperature sensors in the motor windings.

Oil	
1 litre non-toxic oil, type Shell Ondina 15	96586753

Thermal contact for three-phase motors	
Thermal contact	96005389

Including three thermal switches for 140 °C and tape (class F)

AP70.80.09-13, model A

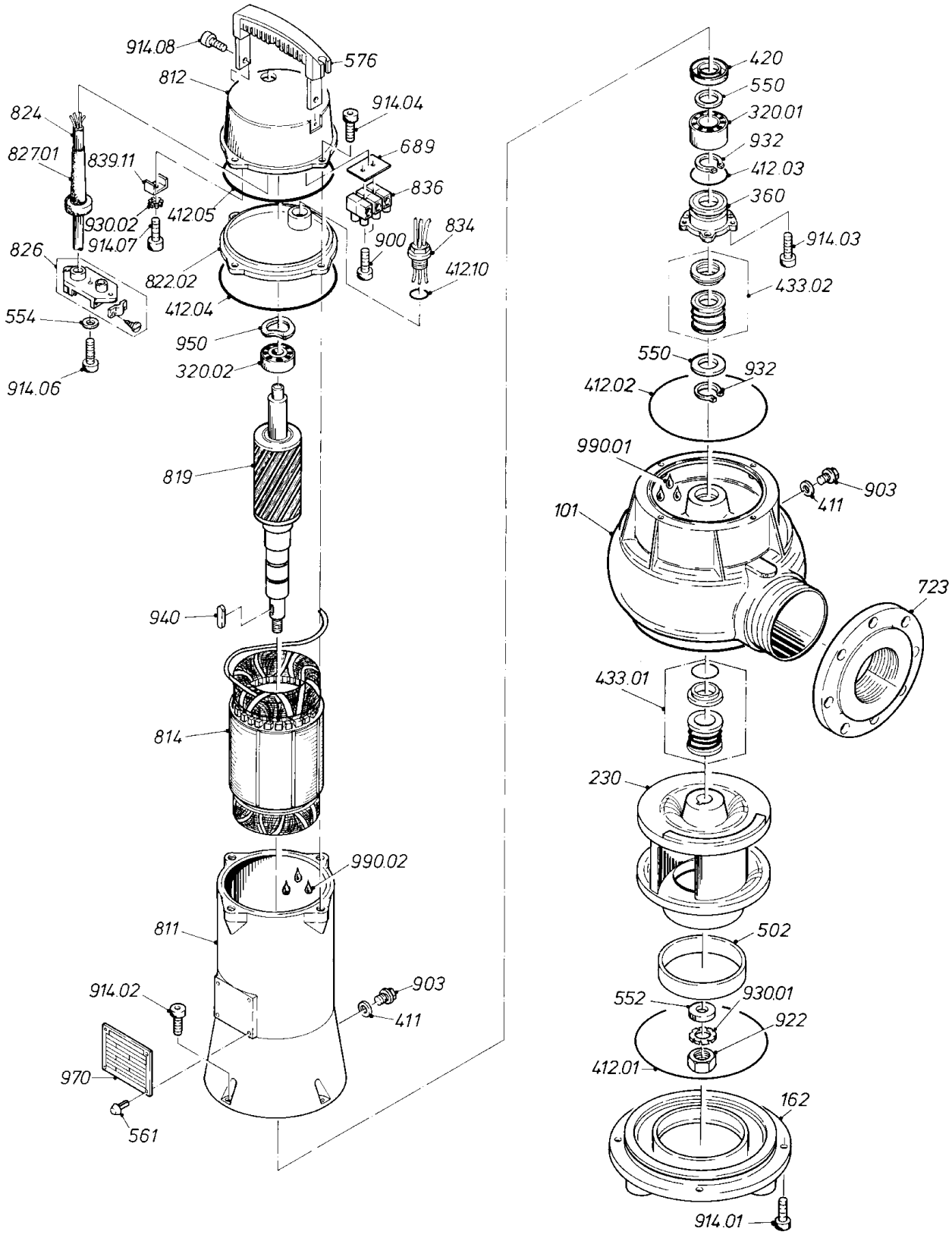

AP70.80.09-13, model B

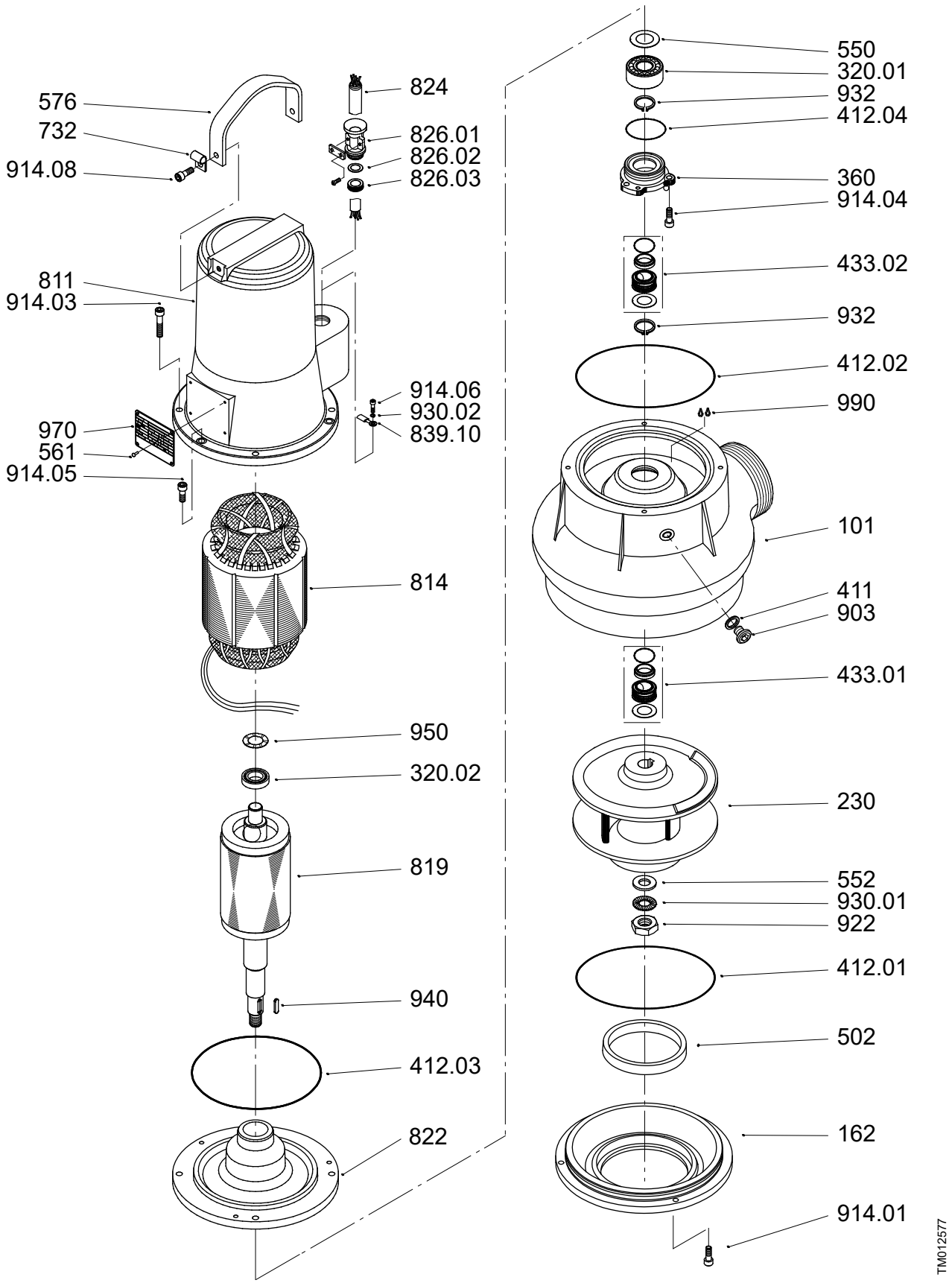

AP70.80.19-24, model B

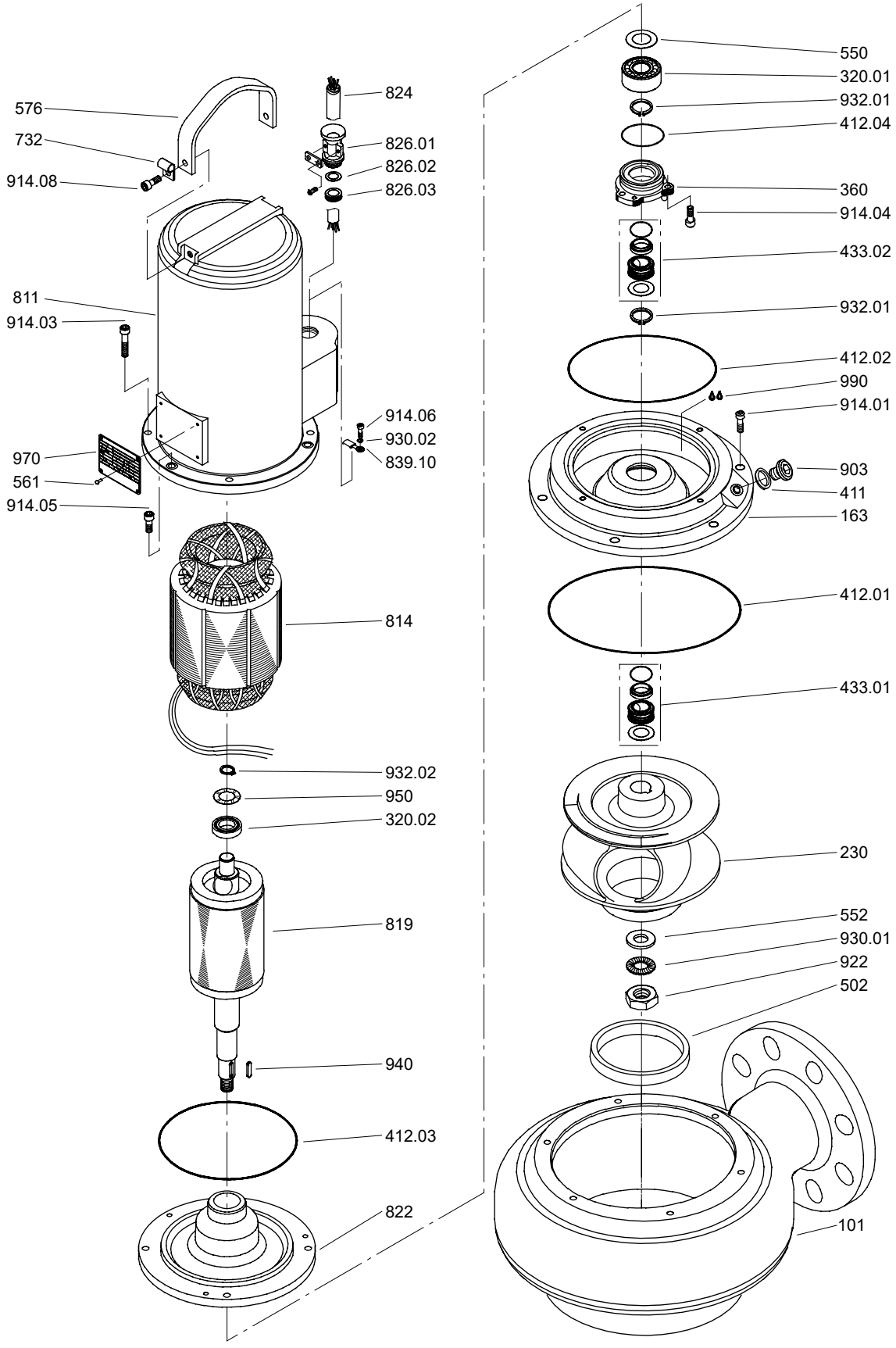

AP80

50/60 Hz

Wear parts

Pos.	Description
411	Cable entry
412	O-rings
433	Shaft seal
502	Neck ring
826	Cable entry (only 60 Hz)
903	Oil-filling screw (only 50 Hz)

50 Hz

Pump type	With moisture sensors	Without moisture sensors	Dry installation D	Dry horizontal installation DH
AP80.100.107	96005378	96005377	96005379	96005379
AP80.150.250	96004008	96004008	96004009	96004009
AP80.150.300	96004008	96004008	96004009	96004009
AP80.150.330	96004008	96004008	96004009	96004009
AP80.150.350	96004014	96004014	96004015	96004015
AP80.150.370	96004014	96004014	96004015	96004015
AP80.150.450	96004014	96004014	96004015	96004015
AP80.100.107.Ex	96005380	96005377	96005381	96005381
AP80.150.250.Ex	96004008	96004008	96004009	96004009
AP80.150.300.Ex	96004008	96004008	96004009	96004009
AP80.150.330.Ex	96004008	96004008	96004009	96004009
AP80.150.350.Ex	96004014	96004014	96004015	96004015
AP80.150.370.Ex	96004014	96004014	96004015	96004015
AP80.150.450.Ex	96004014	96004014	96004015	96004015

60 Hz

Pump type	3 x 230 V	3 x 380 V	3 x 440 V	3 x 460 V
AP80.100.15	96005368	96005368	96005368	96005368
AP80.100.21	96005368	96005368	96005368	96005368
AP80.100.27	96005368	96005368	96005368	96005368
AP80.100.35	96005368	96005368	96005368	96005368
AP80.100.47	96005368	96005368	96005368	96005368
AP80.100.65	96005369	96005370	96005370	96005370
AP80.100.74	96005369	96005370	96005370	96005370
AP80.100.87	96005371	96005372	96005372	96005372
AP80.100.107	96005373	96005371	96005372	96005372

AP80

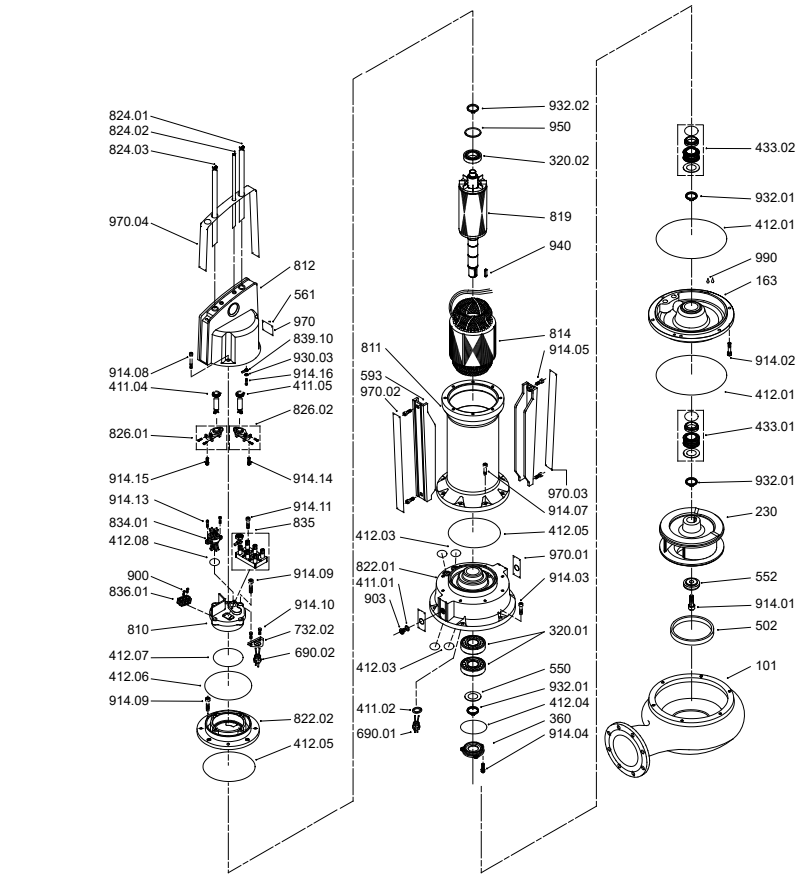

TM011734

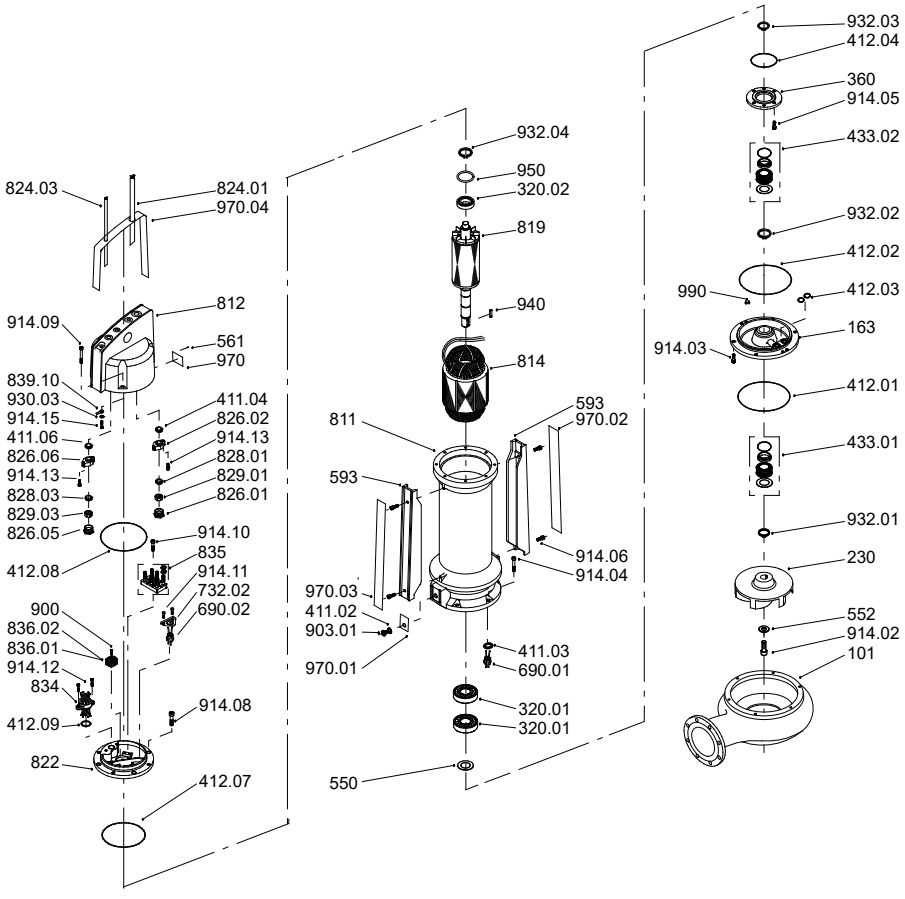

TM016184

With vortex impeller

Pos.	Description
411	Cable entry
412	O-rings
433	shaft seal
826	Cable entry
828	Sealing ring (only: 96005382 - 88)

50 Hz

Pump type	Non-explosion-proof version		Explosion-proof version	
AP80.80.10.V	96005375		96005376	
AP80.80.13.V	96005375		96005376	
AP80.80.20.V	96005375		96005376	
AP80.80.26.V	96005375		96005376	
Pump type	**With moisture sensors**	**Without moisture sensors**	**Dry installation D**	**Dry horizontal installation DH**
AP80.80.48.V	96005378	96005377	96005379	96005379
AP80.80.65.V	96005378	96005377	96005379	96005379
AP80.80.92.V	96005378	96005377	96005379	96005379
AP80.80.107.V	96005378	96005377	96005379	96005379
AP80.80.160.V	96005383	96005382	96005385	96005385
AP80.80.190.V	96005383	96005382	96005385	96005385
AP80.80.250.V	96005384	96005382	96005386	96005386
AP80.80.48.V.Ex	96005380	96005377	96005381	96005381
AP80.80.65.V.Ex	96005380	96005377	96005381	96005381
AP80.80.92.V.Ex	96005380	96005377	96005381	96005381
AP80.80.107.V.Ex	96005380	96005377	96005381	96005381
AP80.80.160.V.Ex	96005387	96005387	96005388	96005388
AP80.80.190.V.Ex	96005387	96005387	96005388	96005388
AP80.80.250.V.Ex	96005387	96005387	96005388	96005388

Oil	
1 litre non-toxic oil, type Shell Ondina 15	96586753

Thermal contact for three-phase motors	
Thermal contact	96005389

Including three thermal switches for 140 °C and tape (class F)

AP80

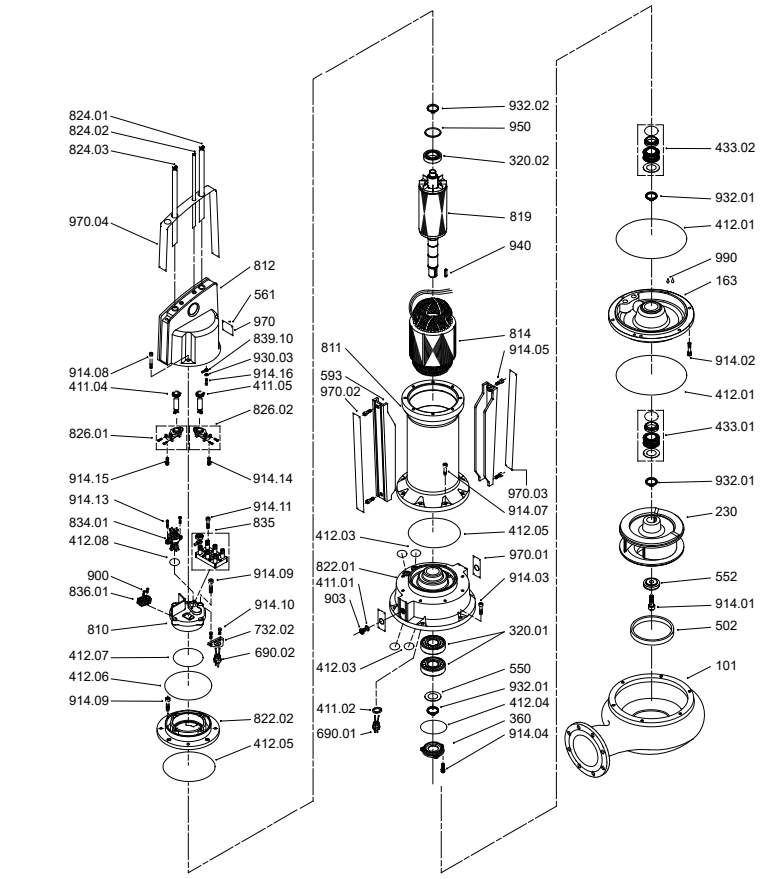

TM011734

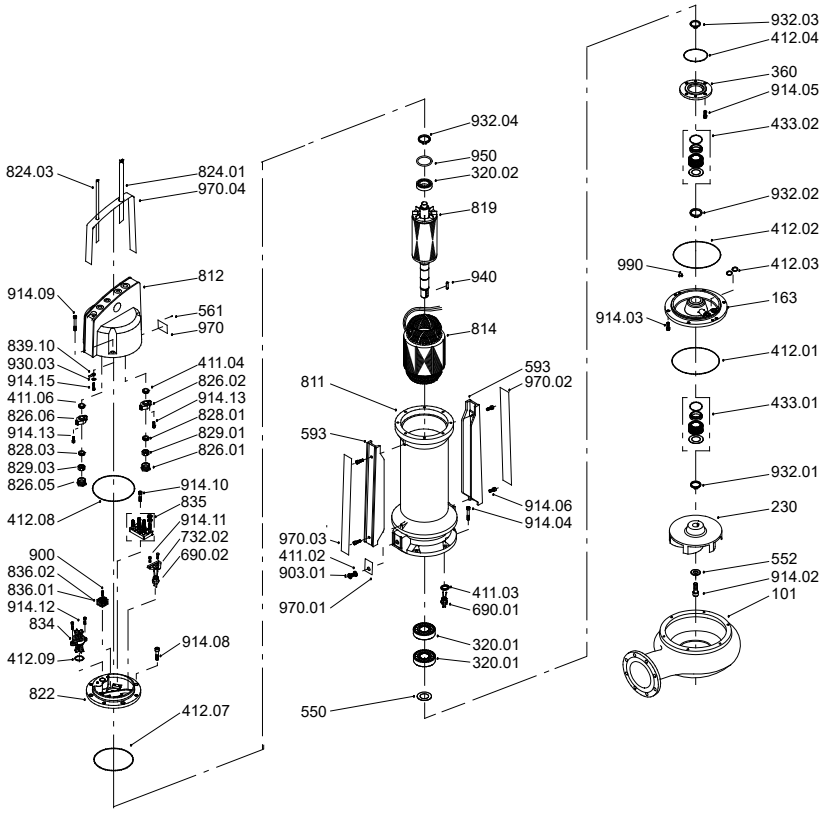

TM016184

AP100

50 Hz

Wear parts

Up to: AP100.150.170		From: AP100.150.220	
Pos.	Description	Pos.	Description
412	1 O-ring kit	411	1 rubber bush for cable entry
433.01	1 shaft seal kit complete	412	1 O-ring kit
433.02	1 secondary shaft seal kit	433	1 shaft seal kit complete
502	Neck ring	433	1 secondary shaft seal kit
826	1 cable entry	502	1 neck ring
		903	1 oil-filling screw

Pump type	With moisture sensors	Without moisture sensors	Dry installation D	Dry horizontal installation DH
AP100.100.24	96007162	96007162	96002277	96002277
AP100.100.32	96007162	96007162	96002278	96002278
AP100.100.45	96007162	96007162	96002278	96002278
AP100.100.54	96007162	96007162	96002278	96002278
AP100.100.61	96007162	96007162	96002278	96002278
AP100.100.80	96003818	96003816	96003819	96003819
AP100.100.115	96003818	96003817	96003819	96003819
AP100.100.130	96003818	96003817	96003819	96003819
AP100.100.135	96003818	96003817	96003819	96003819
AP100.150.80	96003818	96003816	96003819	96003819
AP100.150.115	96003818	96003817	96003819	96003819
AP100.150.130	96003818	96003817	96003819	96003819
AP100.150.170	96003818	96003817	96003819	96003819
AP100.150.220	96004008	96004008	96004009	96004009
AP100.150.260	96004008	96004008	96004009	96004009
AP100.150.300	96004008	96004008	96004009	96004009
AP100.150.330	96004008	96004008	96004009	96004009
AP100.200.170	96004010	96004010	96004011	96004011
AP100.200.200	96004010	96004010	96004011	96004011
AP100.200.220	96004010	96004010	96004011	96004011
AP100.200.250	96004010	96004010	96004011	96004011
AP100.100.24.Ex	96007162	96007162	96002279	96002279
AP100.100.32.Ex	96007162	96007162	96002280	96002280
AP100.100.45.Ex	96007162	96007162	96002280	96002280
AP100.100.54.Ex	96007162	96007162	96002280	96002280
AP100.100.61.Ex	96007162	96007162	96002280	96002280
AP100.100.80.Ex	96003821	96003820	96003822	96003822
AP100.100.115.Ex	96003821	96003820	96003822	96003822
AP100.100.130.Ex	96003821	96003820	96003822	96003822
AP100.100.135.Ex	96003821	96003820	96003822	96003822
AP100.150.80.Ex	96003821	96003820	96003822	96003822
AP100.150.115.Ex	96003821	96003820	96003822	96003822
AP100.150.130.Ex	96003821	96003820	96003822	96003822
AP100.150.170.Ex	96003821	96003820	96003822	96003822
AP100.150.220.Ex	96004008	96004008	96004009	96004009
AP100.150.260.Ex	96004008	96004008	96004009	96004009
AP100.150.300.Ex	96004008	96004008	96004009	96004009
AP100.150.330.Ex	96004008	96004008	96004009	96004009

Pump type	With moisture sensors	Without moisture sensors	Dry installation D	Dry horizontal installation DH
AP100.200.170.Ex	96004010	96004010	96004011	96004011
AP100.200.200.Ex	96004010	96004010	96004011	96004011
AP100.200.220.Ex	96004010	96004010	96004011	96004011
AP100.200.250.Ex	96004010	96004010	96004011	96004011

Oil	
1 litre non-toxic oil, type Shell Ondina 15	96586753

Thermal contact for three-phase motors	
Thermal contact	96005389

Including three thermal switches for 140 °C and tape (class F)

AP100.200/130.250xxx

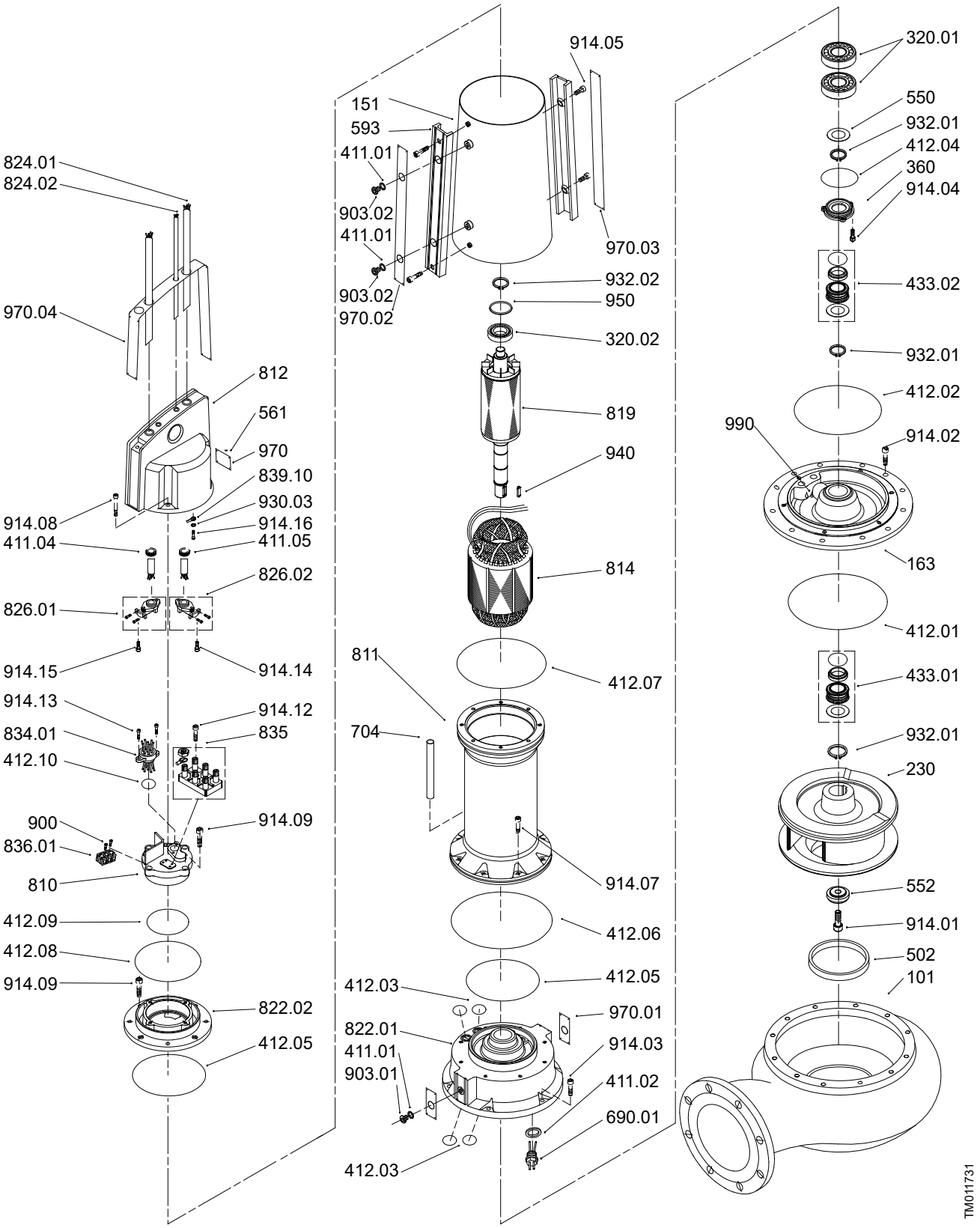

AP100

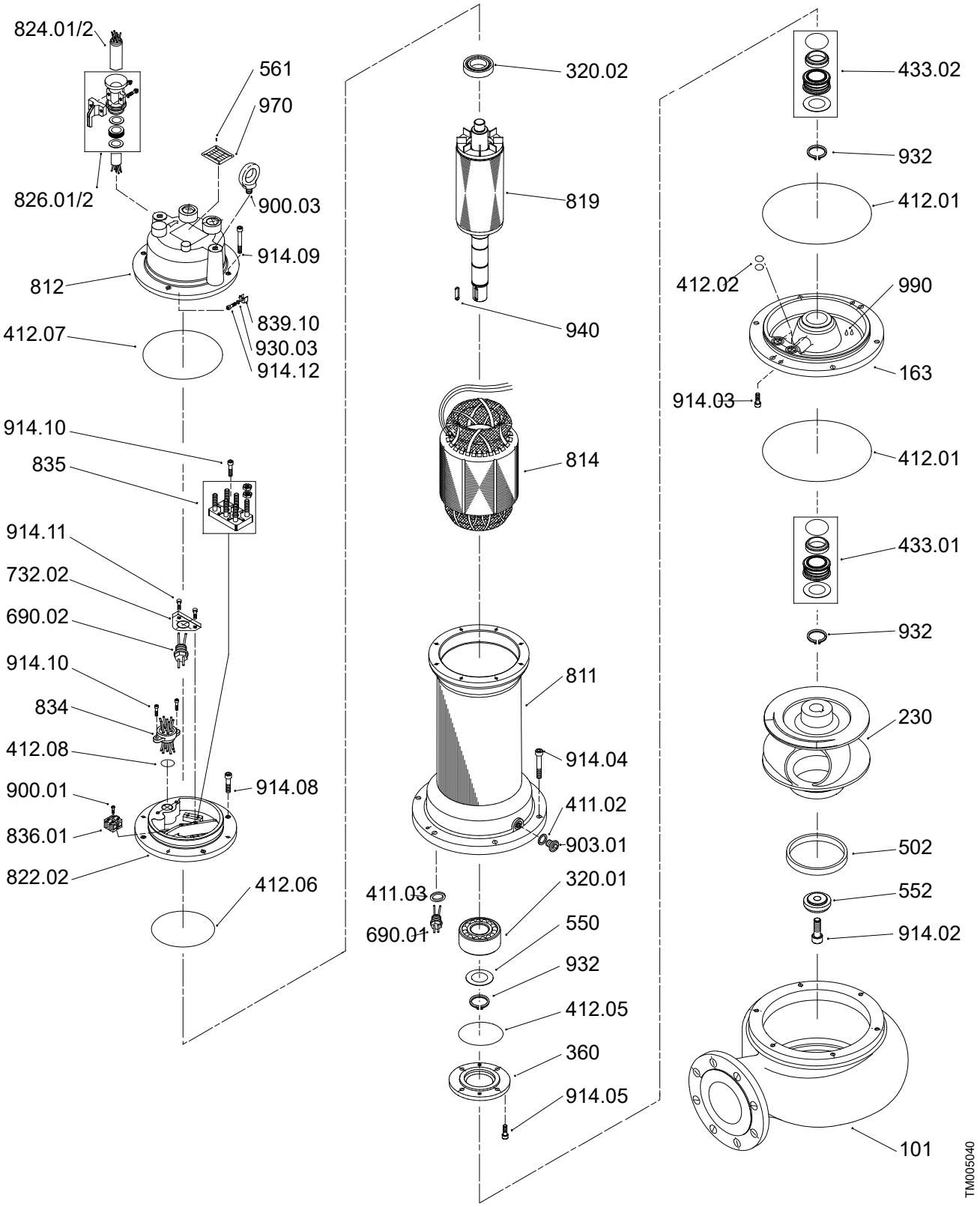
824.01/2
561
970
826.01/2
900.03
914.09
812
839.10
930.03
914.12
412.07
914.10
835
914.11
732.02
690.02
914.10
834
412.08
900.01
914.08
836.01
822.02
412.06
320.02
819
940
814
811
914.04
411.02
903.01
411.03
320.01
690.01
550
932
412.05
360
914.05
433.02
932
412.01
412.02
990
163
914.03
412.01
433.01
932
230
502
552
914.02
101
TM005040

AP130

Wear parts

Pos.	Description
411	1 rubber bush for cable entry
412	1 O-ring kit
433.01	1 shaft seal kit complete
433.02	1 secondary shaft seal kit
502	1 neck ring
903	1 oil-filling screw

Pump type	With moisture sensors	Without moisture sensors	Dry installation D	Dry horizontal installation DH
AP130.250.170	96004012	96004012	96004013	96004013
AP130.250.200	96004012	96004012	96004013	96004013
AP130.250.220	96004012	96004012	96004013	96004013
AP130.250.250	96004012	96004012	96004013	96004013
AP130.250.300	96004016	96004016	96004017	96004017
AP130.250.350	96004016	96004016	96004017	96004017
AP130.250.170.Ex	96004012	96004012	96004013	96004013
AP130.250.200.Ex	96004012	96004012	96004013	96004013
AP130.250.220.Ex	96004012	96004012	96004013	96004013
AP130.250.250.Ex	96004012	96004012	96004013	96004013
AP130.250.300.Ex	96004016	96004016	96004017	96004017
AP130.250.350.Ex	96004016	96004016	96004017	96004017

Oil	
1 litre non-toxic oil, type Shell Ondina 15	96586753

Thermal contact for three-phase motors

Thermal contact for three-phase motors	
Thermal contact	96005389

Including three thermal switches for 140 °C and tape (class F)

AP130

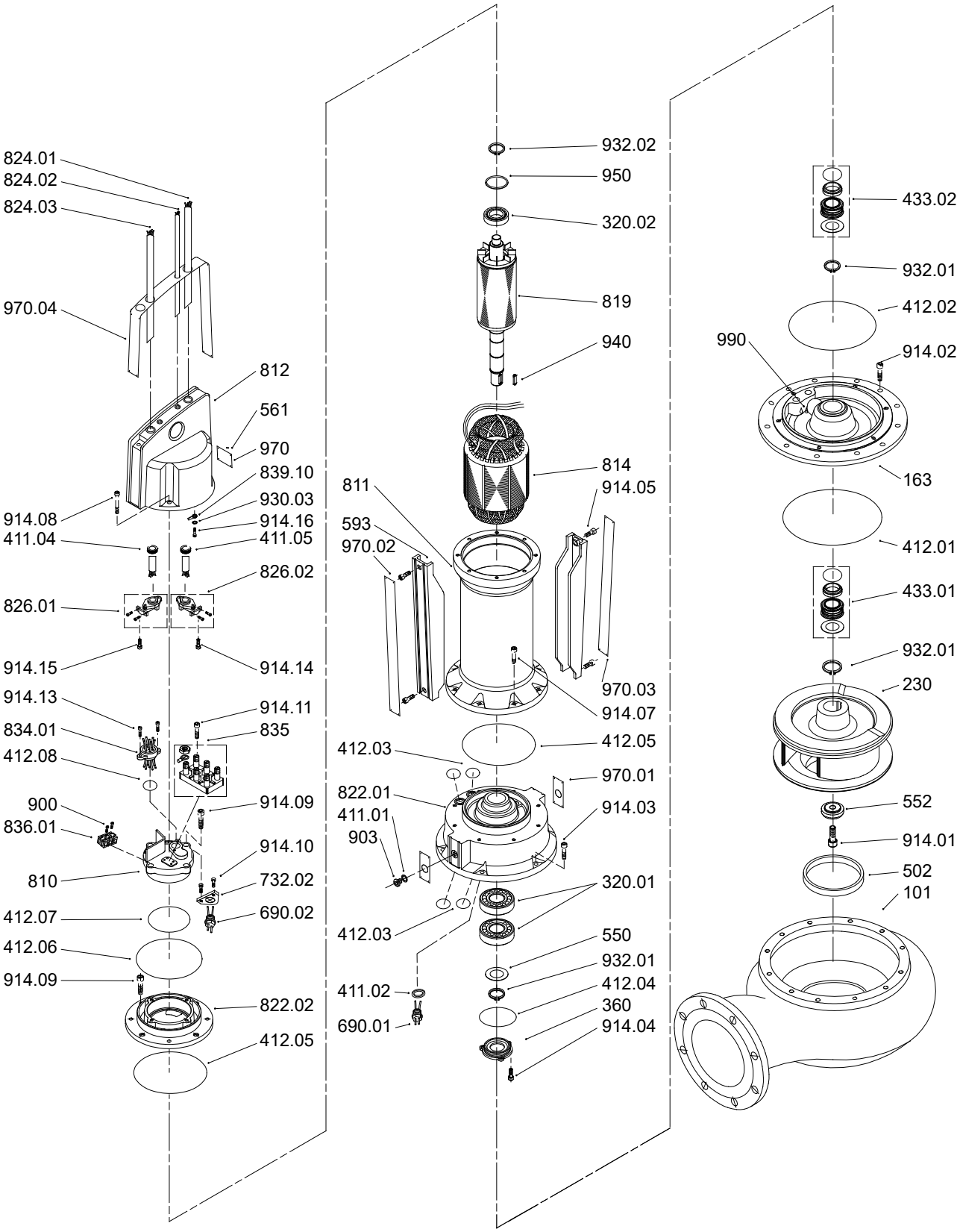
824.01
824.02
824.03
970.04
812
561
970
839.10
930.03
914.16
914.08
411.04
411.05
826.02
826.01
914.15
914.14
914.13
914.11
834.01
835
412.08
900
914.09
836.01
914.10
810
732.02
412.07
690.02
412.06
914.09
822.02
412.05
932.02
950
320.02
819
940
814
811
914.05
593
970.02
970.03
914.07
412.03
412.05
970.01
822.01
914.03
411.01
903
320.01
412.03
550
932.01
411.02
412.04
360
690.01
914.04
433.02
932.01
412.02
990
914.02
163
412.01
433.01
932.01
230
552
914.01
502
101
TM011729

APG

50/60 Hz, Models A and B

Wear parts

Pos.	Description
420/433	1 shaft seal kit complete
412	1 O-ring kit
826	1 cable entry kit

Pump type	Model A	Model B
50 Hz		
APG.50.09	96003308	96007169
APG.50.11	96003308	96003308
APG.50.09.3.Ex, 11.1.Ex	96003696	96007178
APG.50.17, 18, 19	96003309	96007170
APG.50.19.3.Ex	96003310	96007171
APG.50.31	96003311	96007172
APG.50.31.3.Ex	96003307	96007171
60 Hz		
APG.50.11	96003308	96007169
APG.50.12	96003308	96003308
APG.50.18, 19	96003309	96007170
APG.50.29, 33	96003311	96007172

Control box

Product numbers of control boxes include these parts:

AP30.xx.xx.xA:	1 control box
	10 m cable for float switch
	1 float switch.
Other pumps:	1 control box
	(without relays for float switch).

Pump type	Voltage (V)	Control box	Schuko plug	CEE plug
50 Hz				
APG.50.09.A3	3 x 400			•
APG.50.09.A3	3 x 400			
APG.50.09.A3	3 x 230			
APG.50.11.1	1 x 230			
APG.50.11.1.A1	1 x 230			
APG.50.11.1.A1	1 x 230		•	
APG.50.18.1	1 x 230		•	
APG.50.18.1.A1	1 x 230			
APG.50.18.1.A1	1 x 230		•	
60 Hz				
APG.50.12.1	1 x 230			
APG.50.12.1.A1	1 x 230			
APG.50.18.1	1 x 230			
APG.50.18.A1	1 x 230			•
APG.50.30.1	1 x 230			
APG.50.30.A1	1 x 230			
APG.50.33.1	1 x 230			
APG.50.33.A1	1 x 230			

Oil	
1 litre non-toxic oil, type Shell Ondina 15	96586753

Thermal contact for three-phase motors	
Thermal contact	96005389

APG50.29-33, model A

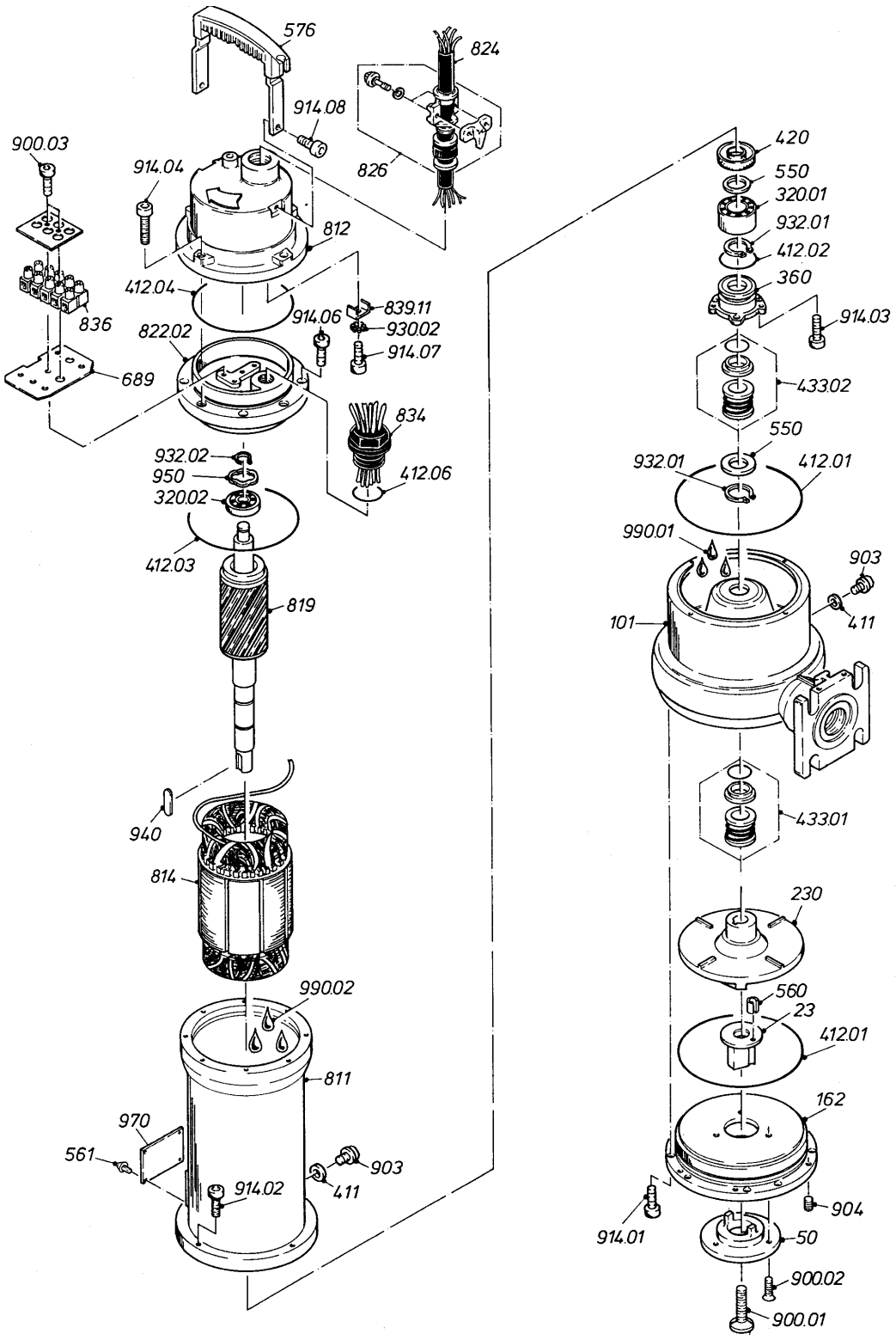

APG50.09-11, model B

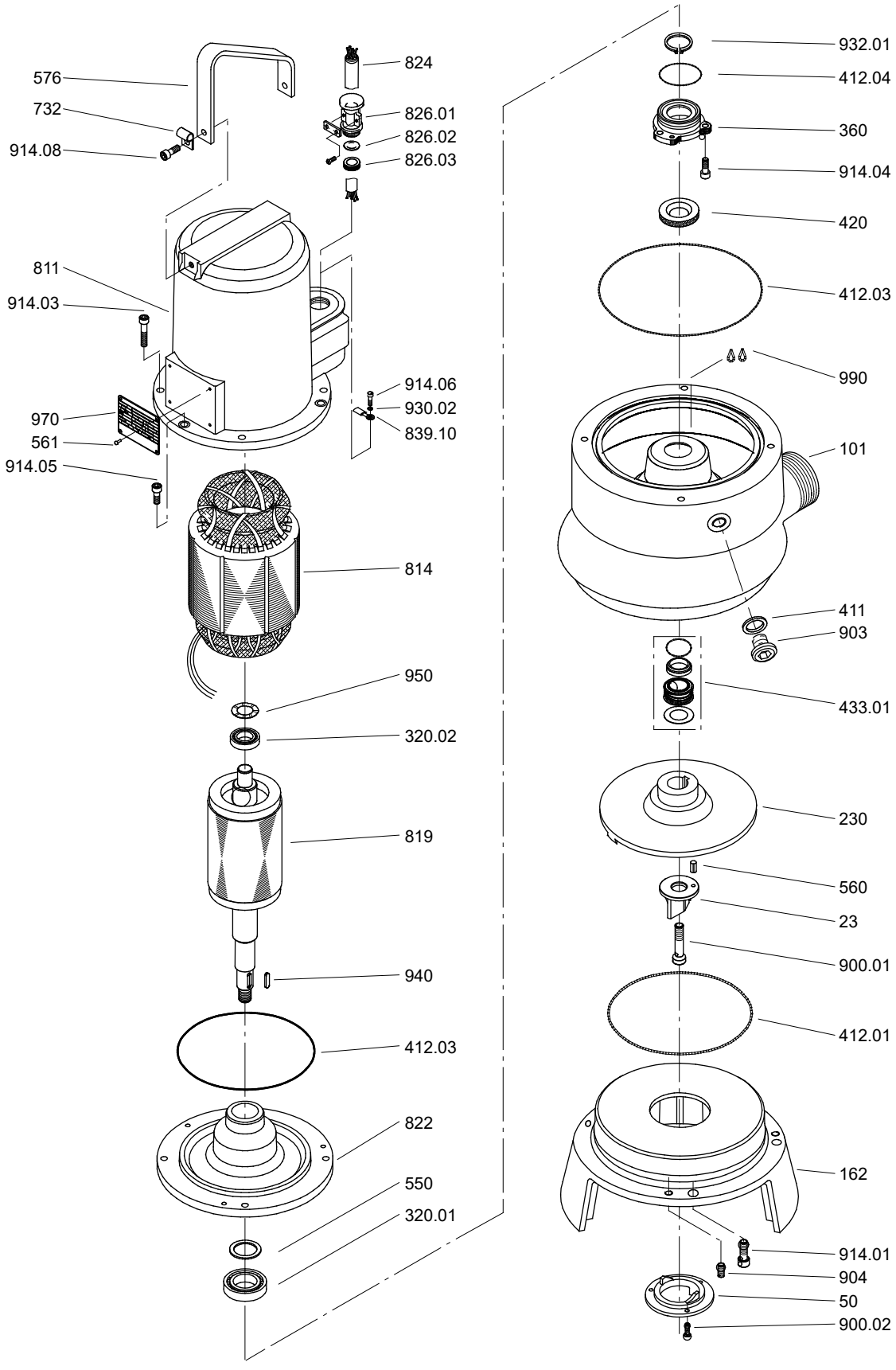

APG50.17-18-19, model B

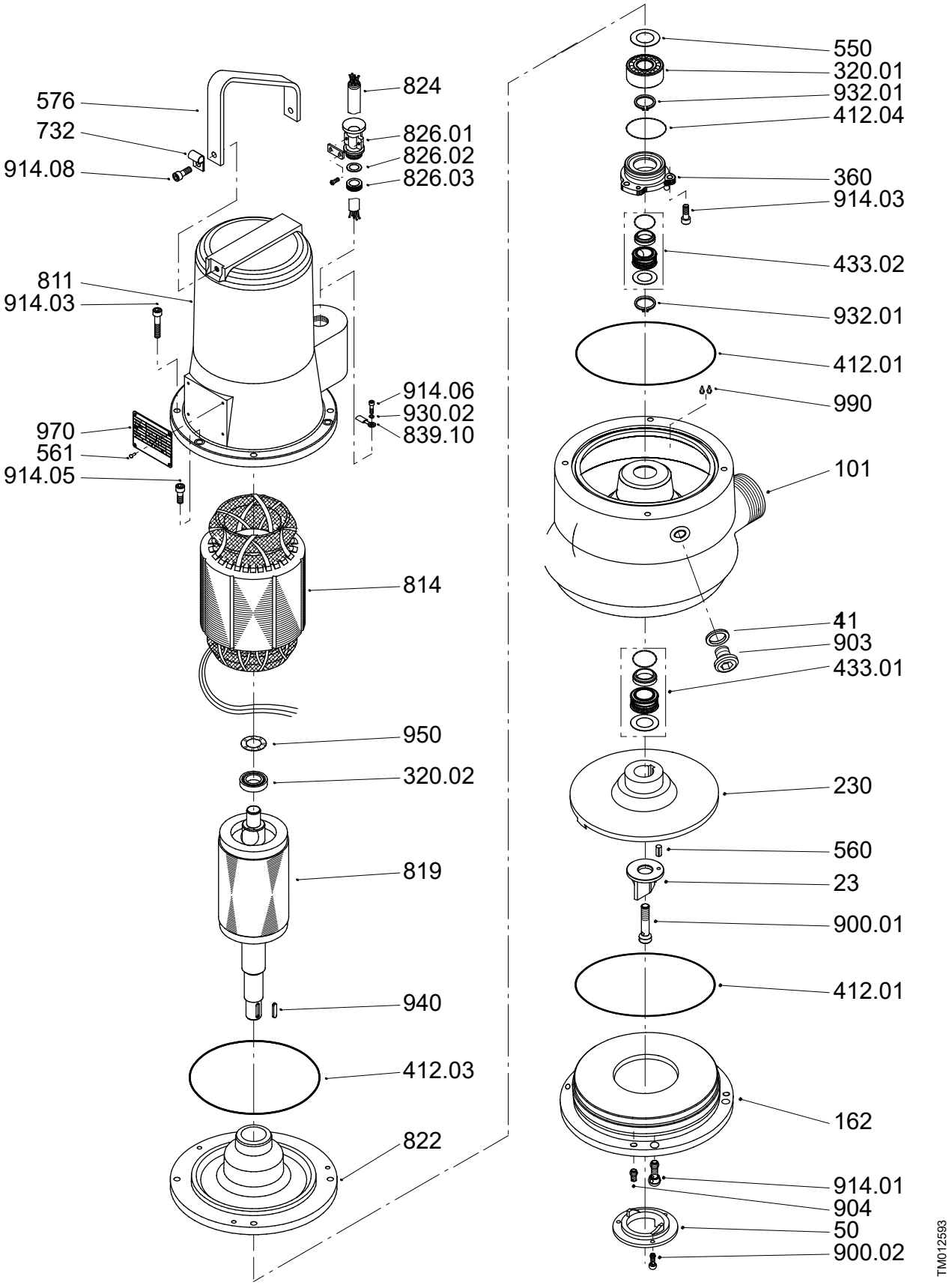

APG

50 Hz

Wear parts

Pos.	Description
23	1 cutter kit
433	1 shaft seal kit complete
412	1 O-ring kit
826	1 cable entry kit

Pump type	
50 Hz	
APG.50.48.3.	96843315
APG.50.48.3.Ex	96843315
APg.50.65.3.	96843315
APG.50.65.3.Ex	96843315
APG.50.92.3.	96843315
APG.50.92.3.Ex	96843315

Moisture relay	
Moisture relay	98123045

Thermistor relay	
Thermistor relay	98123042

Thermal contact for three-phase motors

Thermal contact	96005389

Including three thermal switches for 140 °C and tape (class F)

Oil

1 litre non-toxic oil, type Shell Ondina 15	96586753

APG.50.48-65-92

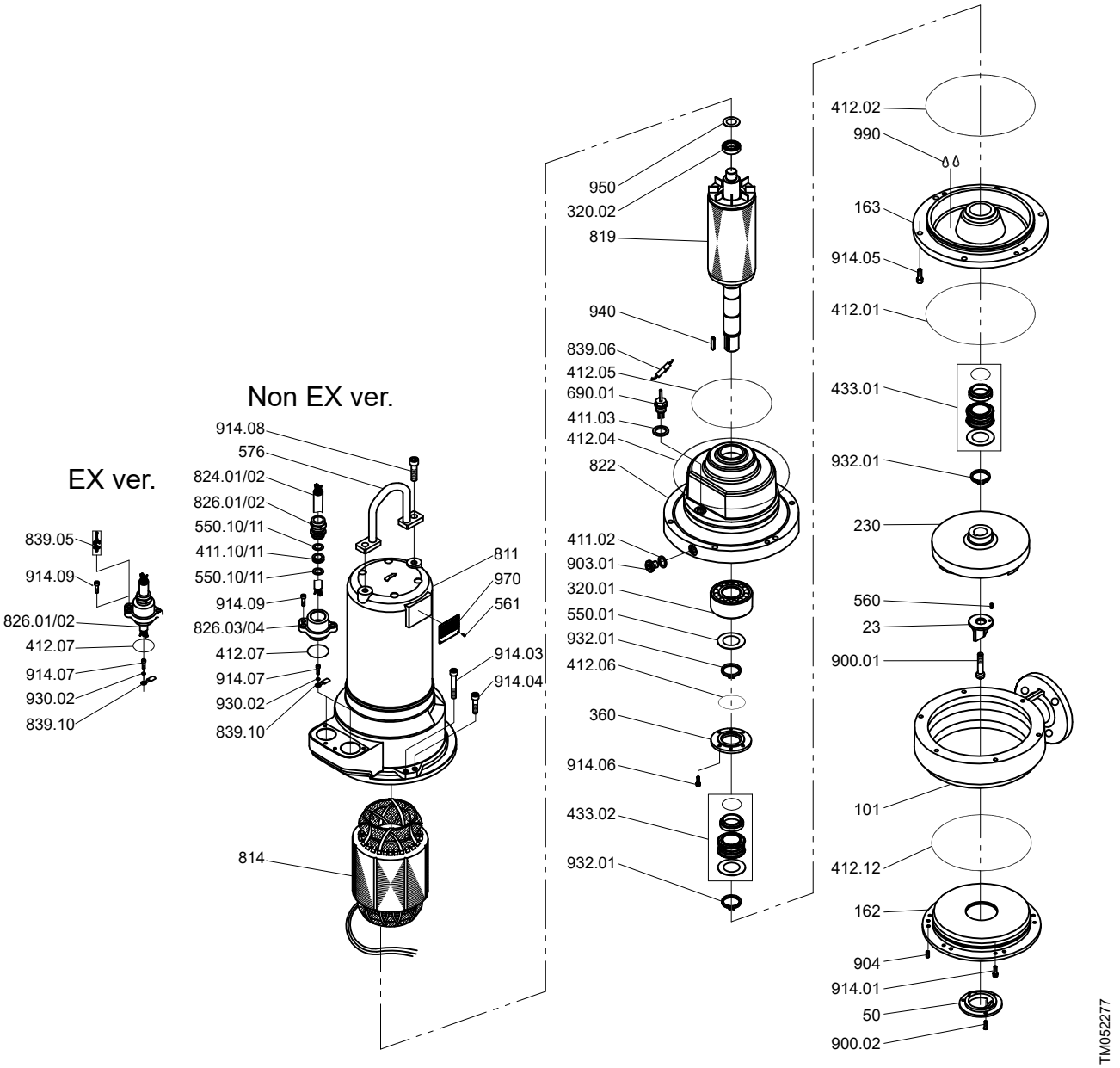

4. BMP

50/60 Hz

Pos.	Pump type	BMP 0.2	BMP 0.4 - 0.6	BMP 1.0 - 1.2	BMP 2.5 - 3.2	BMP 6.2 - 8.0
	Description/kit No	*96577088*	*96577089*	*96577122*	*96605256*	*96605257*
4	Retaining plate	1	1	1	-	-
5	Retaining ball	1	1	1	-	-
7	Spring	1	1	1	-	-
10	Retaining plate	-	-	-	1	1
11	Piston	-	-	-	9	9
13	O-ring	1	1	1	-	-
17	Screw	2	2	2	-	-
22	Piston	5	5	5	-	-
24	O-ring	-	-	-	1	1
26	Spring guide	1	1	1	-	-
26	Screw	-	-	-	8	8
34	O-ring	1	1	1	-	-
35	O-ring	-	-	-	1	1

Pos.	Pump type	BMP 0.3 N	BMP 0.6 - 1.0 N	BMP 1.7 - 2.1 N	BMP 3.4 - 4.4 N	BMP 6.2 - 8.0 N
	Description/kit No	*96577054*	*96577055*	*96577056*	*96605235*	*96605236*
4	Retaining plate	1	1	1	-	-
5	Retaining ball	1	1	1	-	-
7	Spring	1	1	1	-	-
10	Retaining plate	-	-	-	1	1
11	Piston	5	5	5	-	-
13	O-ring	1	1	1	-	-
17	Screw	2	2	2	-	-
22	Piston	-	-	-	9	9
24	O-ring	-	-	-	1	1
26	Spring guide	1	1	1	-	-
26	Screw	-	-	-	8	8
34	O-ring	1	1	1	-	-
35	O-ring	-	-	-	1	1

Pos.	Pump type	BMP 0.6 - 1.0 R	BMP 1.5 - 2.5 R	BMP 3.0 - 3.5 R	BMP 5.1 - 8.2 R	BMP 10.2 R
	Description/kit No	*96906735*	*96906737*	*96906738*	*96906739*	*96906740*
11	Piston	-	-	-	9	9
13	O-ring	1	1	1	-	-
17	Screw	-	-	2	-	-
18	Screw	6	4	4	-	-
22	Piston	5	5	7	-	-
24	O-ring	1	1	1	1	1
26	Screw	-	-	-	8	8
39	O-ring	1	1	1	-	-
	O-ring for swash plate	-	-	-	1	1

BMP 0.2 to 2.1 and BMP 0.3 to 2.1 N

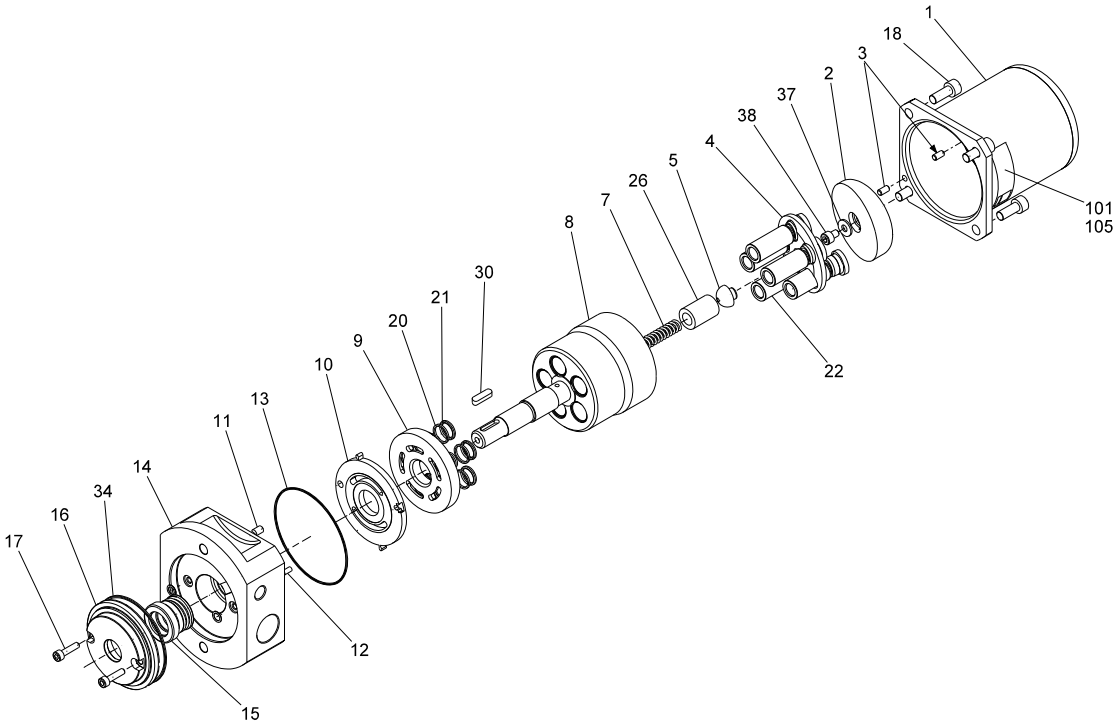

TM029435

BMP 0.6 to 2.2 R

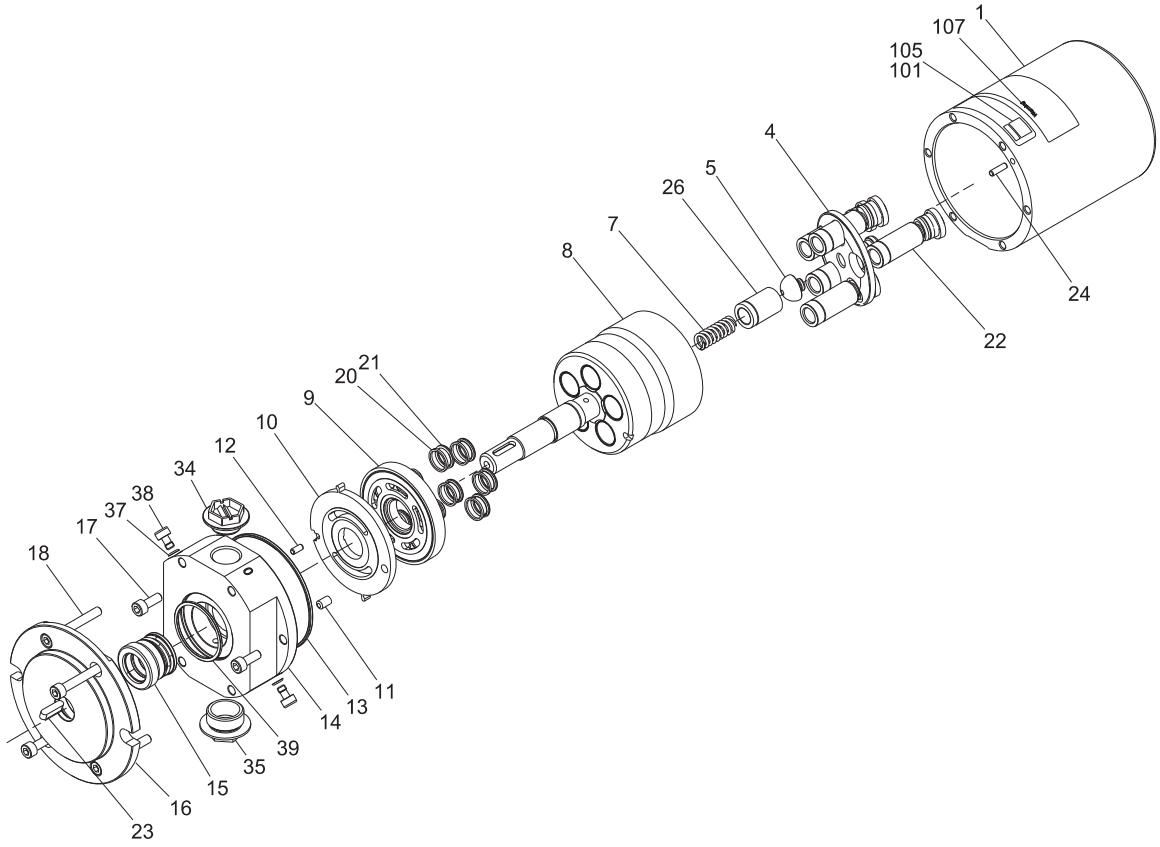

TM032601

Valve plate

Pos.	Pump type	BMP 0.2 - 0.6	BMP 1.0 - 1.2	BMP 2.5 - 3.2	BMP 6.2 - 8.0
	Description/kit No	***96577057***	***96577082***	***96605237***	***96605238***
9	Valve plate	1	1	-	-
10	Port plate	1	1	-	-
12	Guide pin	1	1	-	-
12	O-ring	-	-	9	9
13	Back-up ring	-	-	9	9
13	O-ring	1	1	-	-
14	Valve plate	-	-	1	1
17	Screw	2	2	-	-
20	Back-up ring	5	5	-	-
21	O-ring	5	5	-	-
21	Port plate	-	-	1	1
24	O-ring	-	-	1	1
26	Screw	-	-	16	16
34	O-ring	1	1	-	-
35	O-ring	-	-	1	1

Pos.	Pump type	BMP 0.3 - 1.0 N	BMP 1.7 - 2.1 N	BMP 3.4 - 4.4 N	BMP 6.2 - 8.0 N
	Description/kit No	***96577057***	***96577082***	***96605237***	***96605238***
9	Valve plate	1	1	-	-
10	Port plate	1	1	-	-
11	Guide pin	-	1	-	-
12	Guide pin	1	-	-	-
12	O-ring	-	-	9	9
13	Back-up ring	-	-	9	9
13	O-ring	1	1	-	-
14	Valve plate	-	-	1	1
17	Screw	2	2	-	-
20	Back-up ring	5	5	-	-
21	O-ring	5	5	-	-
21	Port plate	-	-	1	1
24	O-ring	-	-	1	1
26	Screw	-	-	16	16
34	O-ring	1	1	-	-
35	O-ring	-	-	1	1

Pos.	Pump type	BMP 0.6 - 1.0 R	BMP 1.5 - 2.5 R	BMP 3.0 - 3.5 R	BMP 5.1 - 8.2 R	BMP 10.2 R
	Description/kit No	***96906834***	***96906835***	***96906836***	***96906839***	***96906838***
9	Valve plate	1	1	1	-	-
10	Port plate	1	1	1	-	-
12	O-ring	-	-	-	9	9
13	Back-up ring	-	-	-	9	9
14	Valve plate	-	-	-	1	1
20	Back-up ring	5	5	7	-	-
21	O-ring	5	5	7	-	-
21	Port plate	-	-	-	1	1

BMP 2.5 to 8.0 and BMP 3.4 to 8.0 N

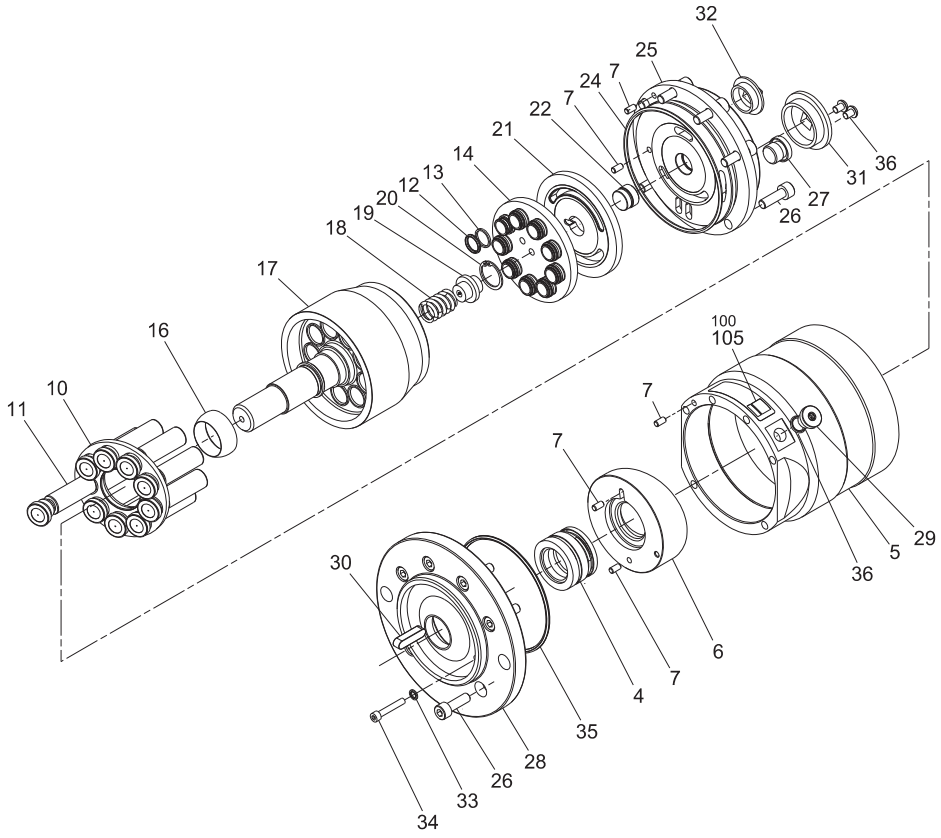

TM032602

BMP 5.1 to 10.2 R

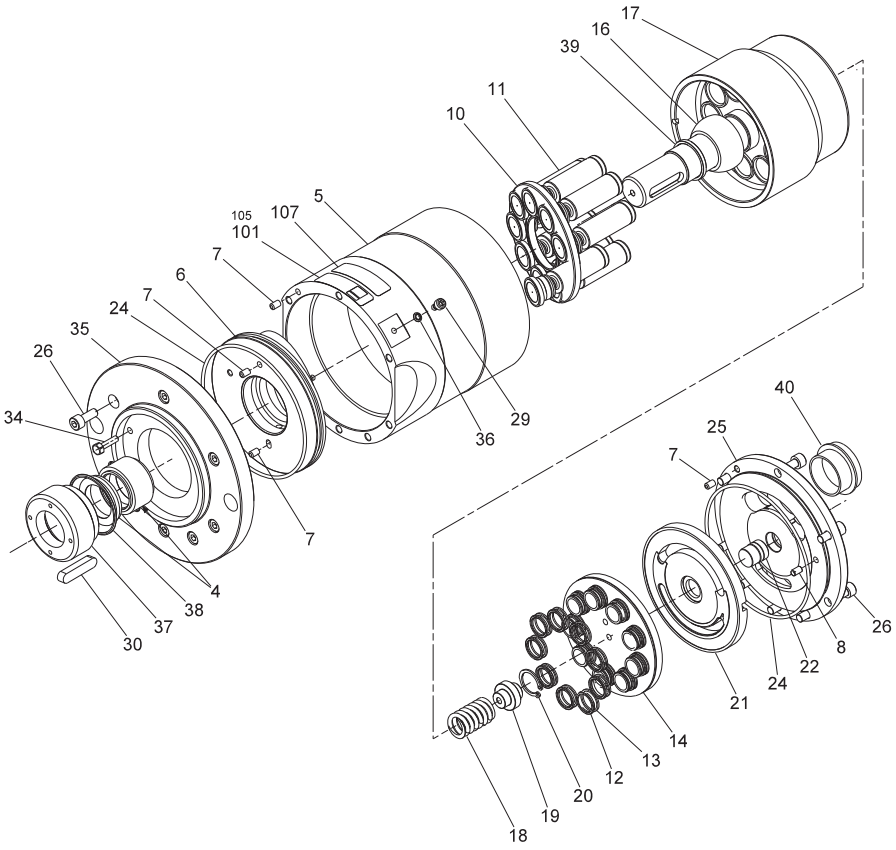

TM029438

Cylinder barrel

Pos.	Pump type	BMP 0.2 - 0.6	BMP 1.0 - 1.2	BMP 2.5 - 3.2	BMP 6.2 - 8.0
	Description/kit No	***96577123***	***96577124***	***96605260***	***96605261***
8	Cylinder barrel	1	1	-	-
13	O-ring	1	1	-	-
17	Screw	2	2	-	-
17	Cylinder barrel	-	-	1	1
24	O-ring	-	-	1	1
26	Screw	-	-	8	8
34	O-ring	1	1	-	-
35	O-ring	-	-	1	1

Pos.	Pump type	BMP 0.3 - 1.0 N	BMP 1.7 - 2.1 N	BMP 3.4 - 4.4 N	BMP 6.2 - 8.0 N
	Description/kit No	***96577083***	***96577084***	***96605239***	***96605250***
8	Cylinder barrel	1	1	1	1
13	O-ring	1	1	-	-
17	Screw	2	2	-	-
17	Cylinder barrel	-	-	1	1
24	O-ring	-	-	1	1
26	Screw	-	-	8	8
34	O-ring	1	1	-	-
35	O-ring	-	-	1	1

Pos.	Pump type	BMP 0.6 - 1.0 R	BMP 1.5 - 2.5 R	BMP 3.0 - 3.5 R	BMP 5.1 - 10.2 R
	Description/kit No	***96906841***	***96906852***	***96906853***	***96906854***
8	Cylinder barrel	1	1	1	1

Retainer

Pos.	Pump type	BMP 0.6 - 1.0 R	BMP 1.5 - 1.8 R	BMP 2.2 - 2.5 R	BMP 3.0 - 3.5 R
	Description/kit No	***96906741***	***96906822***	***96906823***	***96906824***
4	Retainer plate	1	1	1	1
5	Retainer guide	1	1	1	1
7	Spring	1	1	1	1
23	Key	-	1	-	-
26	Spring guide	1	1	1	1

Pos.	Pump type	BMP 5.1 - 8.2 R	BMP 10.2 R
	Description/kit No	***96906826***	***96906825***
10	Retainer plate	1	1
16	Retainer guide	1	1

Swash plate

Pos.	Pump type	BMP 3.0 R	BMP 3.5 R	BMP 5.1 R	BMP 6.5 R	BMP 7.2 R	BMP 8.2 R	BMP 10.2 R
	Description/kit No	***96906833***	***96906832***	***96906831***	***96906830***	***96906829***	***96906828***	***96906827***
2	Swash plate	1	1	-	-	-	-	-
6	Swash plate, plate & O-ring	-	-	1	1	1	1	1
3	Pin	1	1	-	-	-	-	-
7	Pin	-	-	2	2	2	2	2
24	O-ring	-	-	1	1	1	1	1
26	Screw	-	-	8	8	8	8	8
34	Screw	-	-	1	1	1	1	1
38	Screw	1	1	-	-	-	-	-

BMP 0.2 to 2.1 and BMP 0.3 to 2.1 N

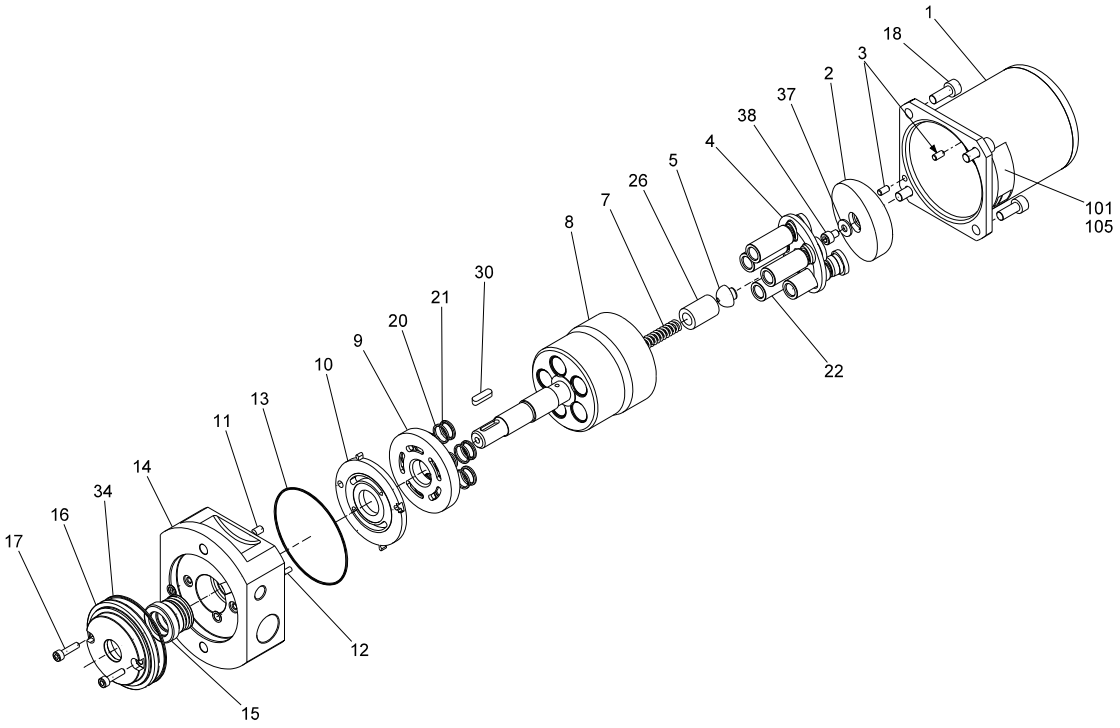

TM029435

BMP 0.6 to 2.2 R

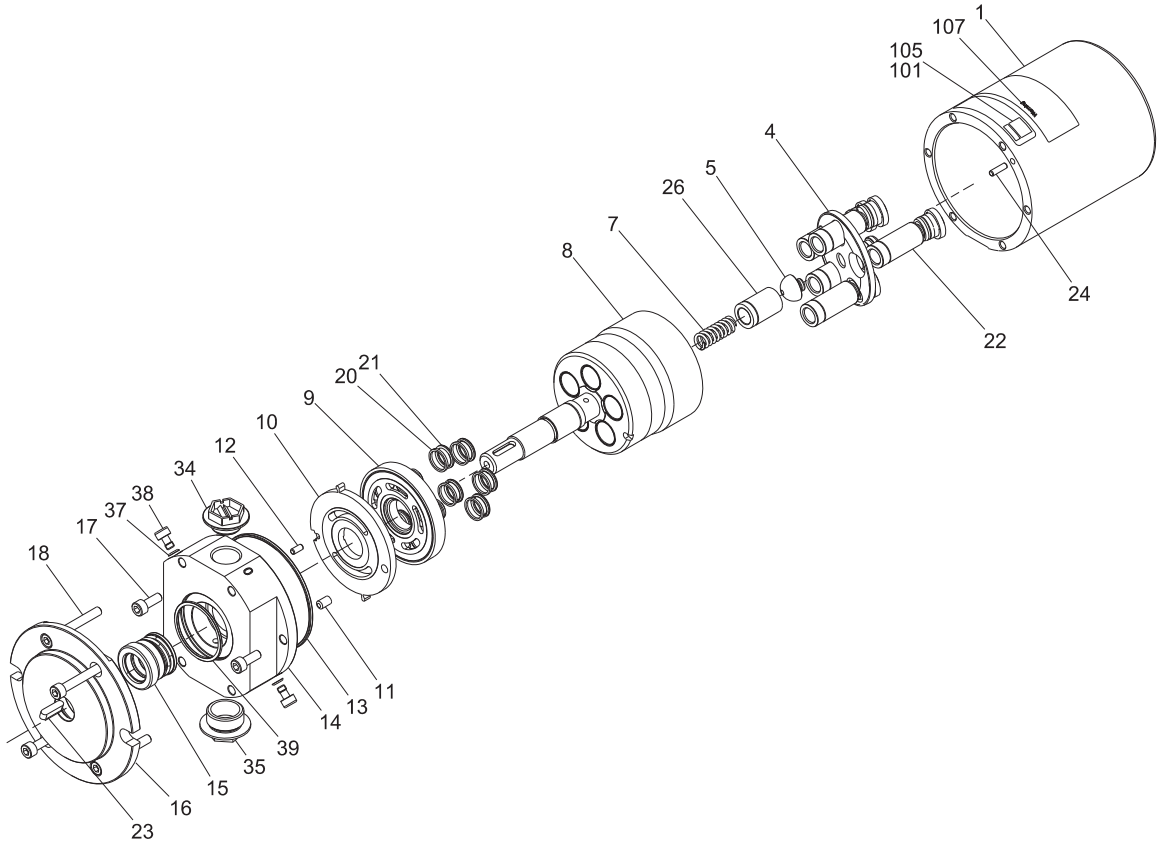

TM032601

Shaft seal

Pos.	Pump type	BMP 0.2 - 0.6	BMP 1.0 - 1.2	BMP 2.5 - 3.2	BMP 6.2 - 8.0
	Description/kit No	***96577051***	***96577053***	***96605231***	***96605233***
4	Shaft seal	-	-	1	1
12	O-ring	-	-	9	9
13	Back-up ring	-	-	9	9
13	O-ring	1	1	-	-
15	Shaft seal	1	1	-	-
20	Back-up ring	5	5	-	-
21	O-ring	5	5	-	-
24	O-ring	-	-	1	1
30	Key	1	1	1	1
34	O-ring	1	1	-	-
35	O-ring	-	-	1	1
36	O-ring	-	-	1	1

Pos.	Pump type	BMP 0.3 - 1.0 N	BMP 1.7 - 2.1 N	BMP 3.4 - 4.4 N	BMP 6.2 - 8.0 N
	Description/kit No	***96577051***	***96577053***	***96605231***	***96605233***
4	Shaft seal	-	-	1	1
12	O-ring	-	-	9	9
13	Back-up ring	-	-	9	9
13	O-ring	1	1	-	-
15	Shaft seal	1	1	-	-
20	Back-up ring	5	5	-	-
21	O-ring	5	5	-	-
24	O-ring	-	-	1	1
30	Key	1	1	1	1
34	O-ring	1	1	-	-
35	O-ring	-	-	1	1
36	O-ring	-	-	1	1

Pos.	Pump type	BMP 0.6 - 1.0 R	BMP 1.5 - 2.5 R	BMP 3.0 - 3.5 R	BMP 5.1 - 10.2 R
	Description/kit No	***96906860***	***96906861***	***96906872***	***96906873***
3	Pin	-	-	1	-
4	Shaft seal	-	-	-	1
7	Pin	-	-	-	4
8	Pin	-	-	-	1
12	Pin	1	1	1	-
12	O-ring	-	-	-	9
13	Back-up ring	-	-	-	9
13	O-ring	1	1	1	-
15	Shaft seal	1	-	1	-
17	Screw	-	2	2	-
18	Screw	6	4	4	-
20	Back-up ring	5	5	7	-
21	O-ring	5	5	7	-
23	Key	1	1	1	-
24	O-ring	-	-	-	2
24	Pin	1	1	1	-
26	Screw	-	-	-	16
29	Bleed screw	-	-	-	2
30	Key	-	-	-	1
34	Screw	-	-	-	1
36	O-ring	-	-	-	2
37	O-ring	2	2	2	-

Pos.	Pump type	BMP 0.6 - 1.0 R	BMP 1.5 - 2.5 R	BMP 3.0 - 3.5 R	BMP 5.1 - 10.2 R
	Description/kit No	***96906860***	***96906861***	***96906872***	***96906873***
38	Bleed screw	2	2	2	-
38	O-ring	-	-	-	1
39	O-ring	1	-	1	-
39	Stop bush	-	-	-	1
	O-ring for swash plate	-	-	-	1

Pump type	BMP 0.6 - 1.0 R	BMP 1.5 - 3.5 R	BMP 5.1 - 10.2 R
Shaft seal tool	*96906875*	*96906876*	*96906877*

BMP 2.5 - 8.0 and BMP 3.4 - 8.0 N

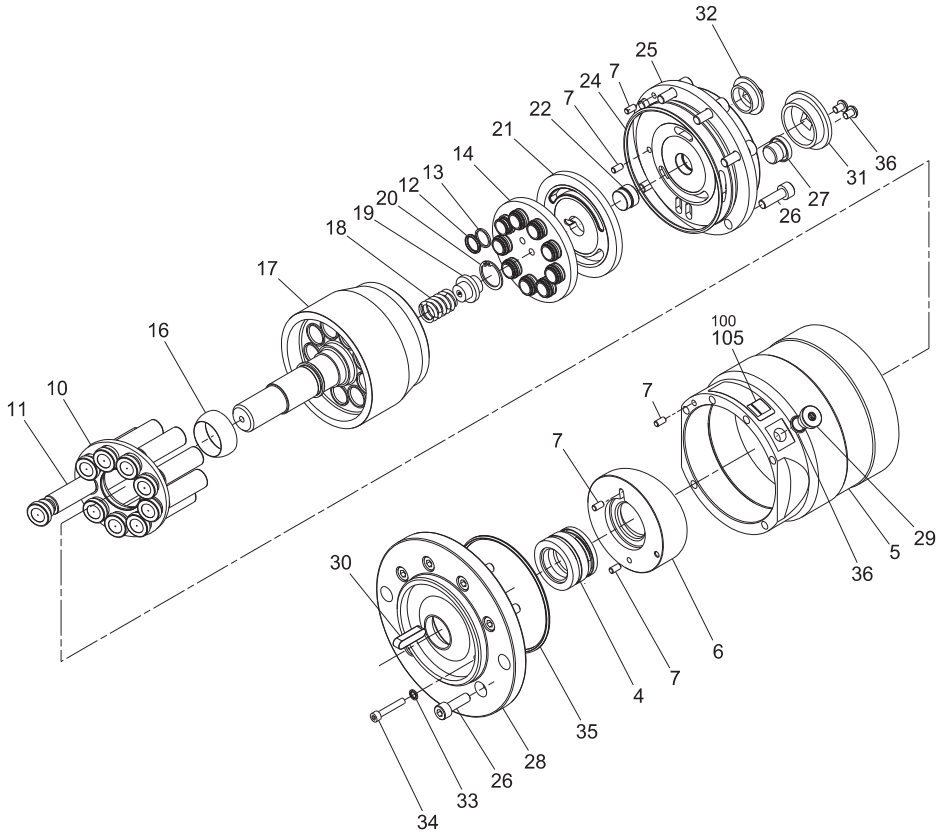

BMP 5.1 - 10.2 R

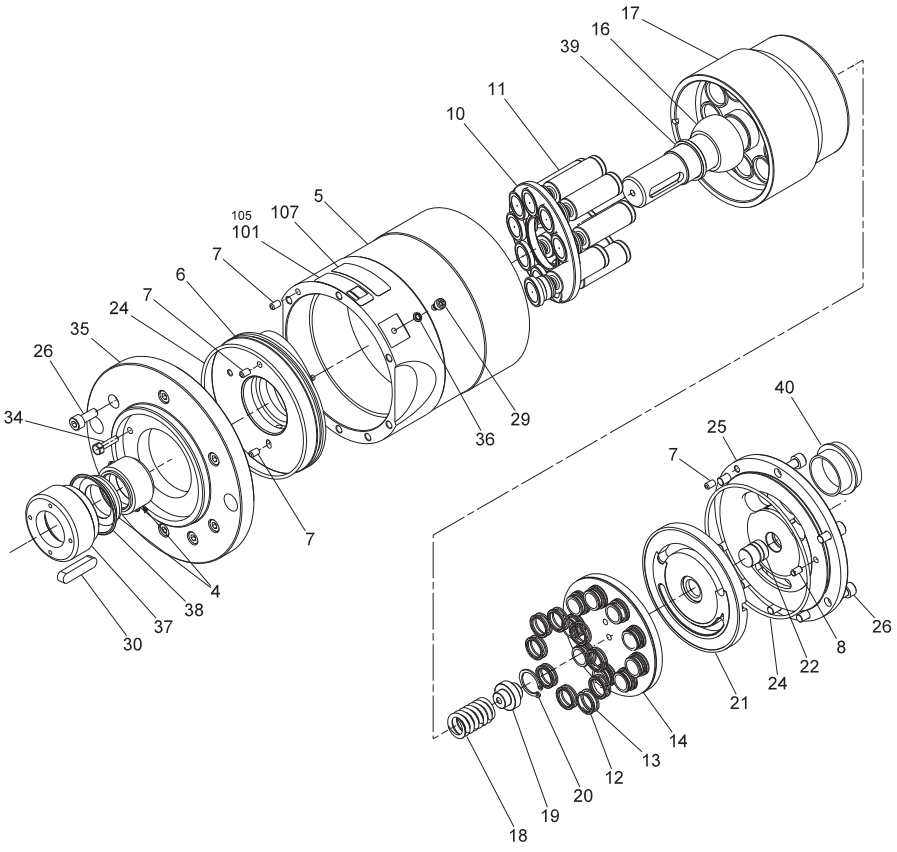

5. BMS

BMShs system

50/60 Hz

Coupling

Pos.	Description/kit No	98546247
379	Spline coupling	1
379b	Screw	6

Control board for VFD

Pos.	Description/kit No	98546341
-	Control board	1

Fan cover for motor

Pos.	Description/kit No	98546338	98580531
	Frame	200	225
-	Fan cover	1	1

Fan for motor

Pos.	Description/kit No	98546337	98580519
	Frame	200	225
-	Fan	1	1

Fan for VFD

Pos.	Description/kit No	98546343
-	Fan	1

Feet

Pos.	Description/kit No	98546222
345	Foot	1
345a	Foot	4

Housing for shaft seal

Pos.	Description/kit No	98546241
374	Housing	1

Housing for thrust bearing

Pos.	Description/kit No	98546229
363	Housing	1

Interface board for VFD

Pos.	Description/kit No	98546345
-	Interface board	1

O-ring sets

Pos.	Description/kit No	98546248
6a	O-ring	1
361a	O-ring	2
365a	O-ring	1
372a	O-ring	1

Power module complete for VFD

Description	Kit No
100T	98546346
120T	98580534
150T	98580537
180T	98580538
220T	98580539

Rectifier module complete for VFD

Description	Kit No
100T/120T	98580541
150T	98580542
180T/220T	98580543

Shaft seal

Pos.	Description/kit No	96586850
371	Shaft seal	1

Shaft with thrust bearing

Pos.	Description/kit No	98546243
367	Shaft	1

Stationary thrust bearing

Pos.	Description/kit No	96586818
368	Thrust bearing	1
369	Support for thrust bearing	1
370a	Pin	4

Thrust bearing housing complete

Pos.	Description/kit No	98546229
361a	O-Ring	2
363a	Screw	4
363	Housing	1
360	Bearing	1
366	Axial bearing	1
367	Shaft with thrust bearing	1
368	Thrust bearing	1
369	Support for thrust bearing	1
371	Shaft seal	1
365a	O-ring	1
372a	O-ring	1
370a	Pin	4
374	Housing for shaft seal	1
374b	Screw	2

BMShs

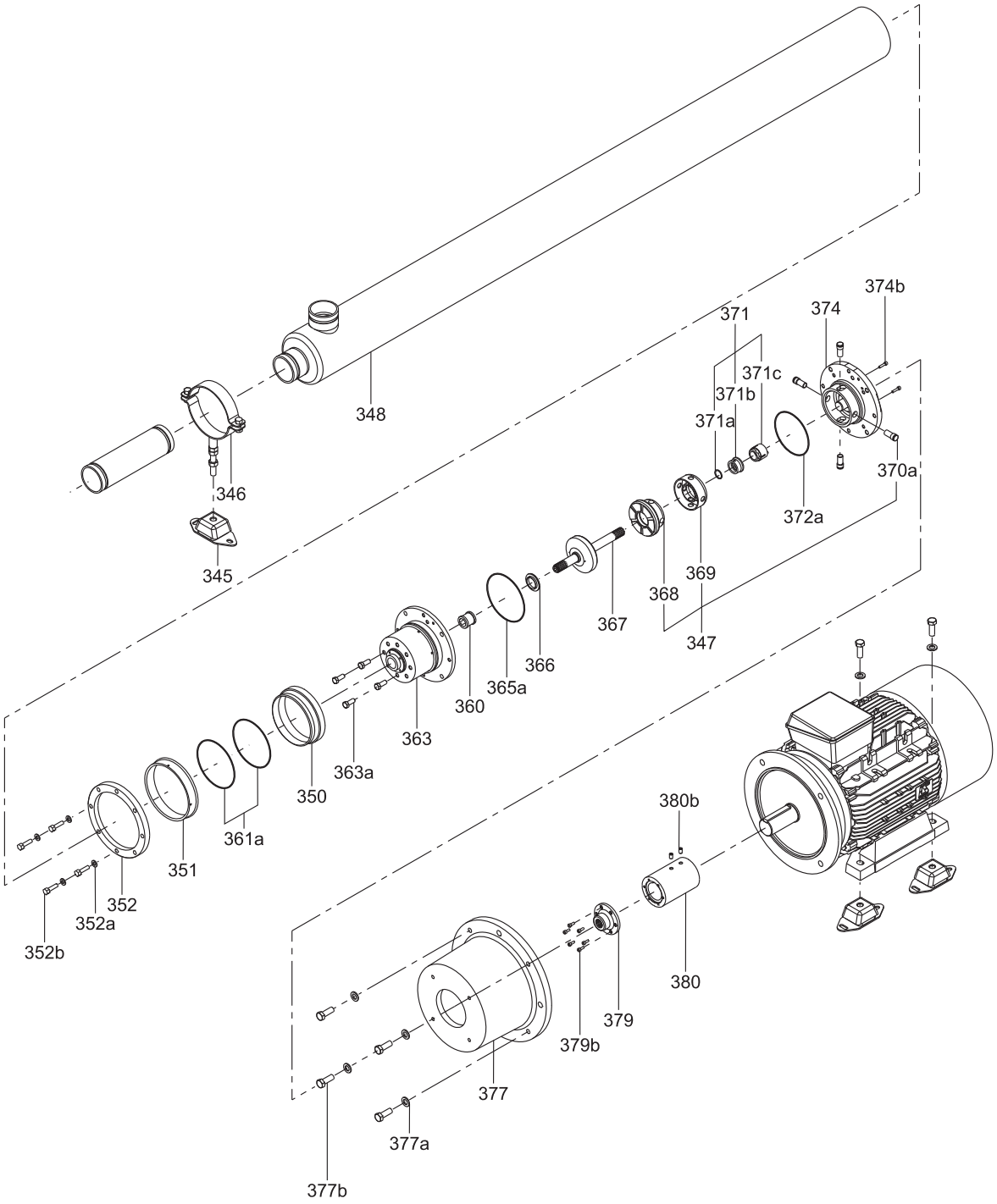
348
346
345
374b
374
371
371c
371b
371a
370a
372a
369
368
367
347
366
365a
360
363
363a
350
361a
351
352
352a
352b
380b
380
379
379b
377
377a
377b
TM059646

BMShs 17 pump

Chamber, intermediate

Pos.	Description/kit No	*96591938*	*97754052*
9	Inlet part	1	5

Chamber, top

Pos.	Description/kit No	*97937784*
4	Chamber, top	1

Impeller set

Pos.	Description/kit No	*96903204*	*96915604*
11	Inlet part	1	5
12	Split cone	1	5
13	Impeller	1	5

Seal ring

Pos.	Description/kit No	*96535344*
7	Seal ring	10

Shaft

Pos.	Description/kit No	*97945231*
16	Shaft	1

Strap

Pos.	Description/kit No	*97937081*
17	Strap	1

Suction interconnector

Pos.	Description/kit No	*97937784*
14	Suction interconnector	1

Valve casing

Pos.	Description/kit No	*97937790*
1	Valve casing	1

Washer for stop ring

Pos.	Description/kit No	*96551283*
8a	Washer	5

BMShs 17 pump

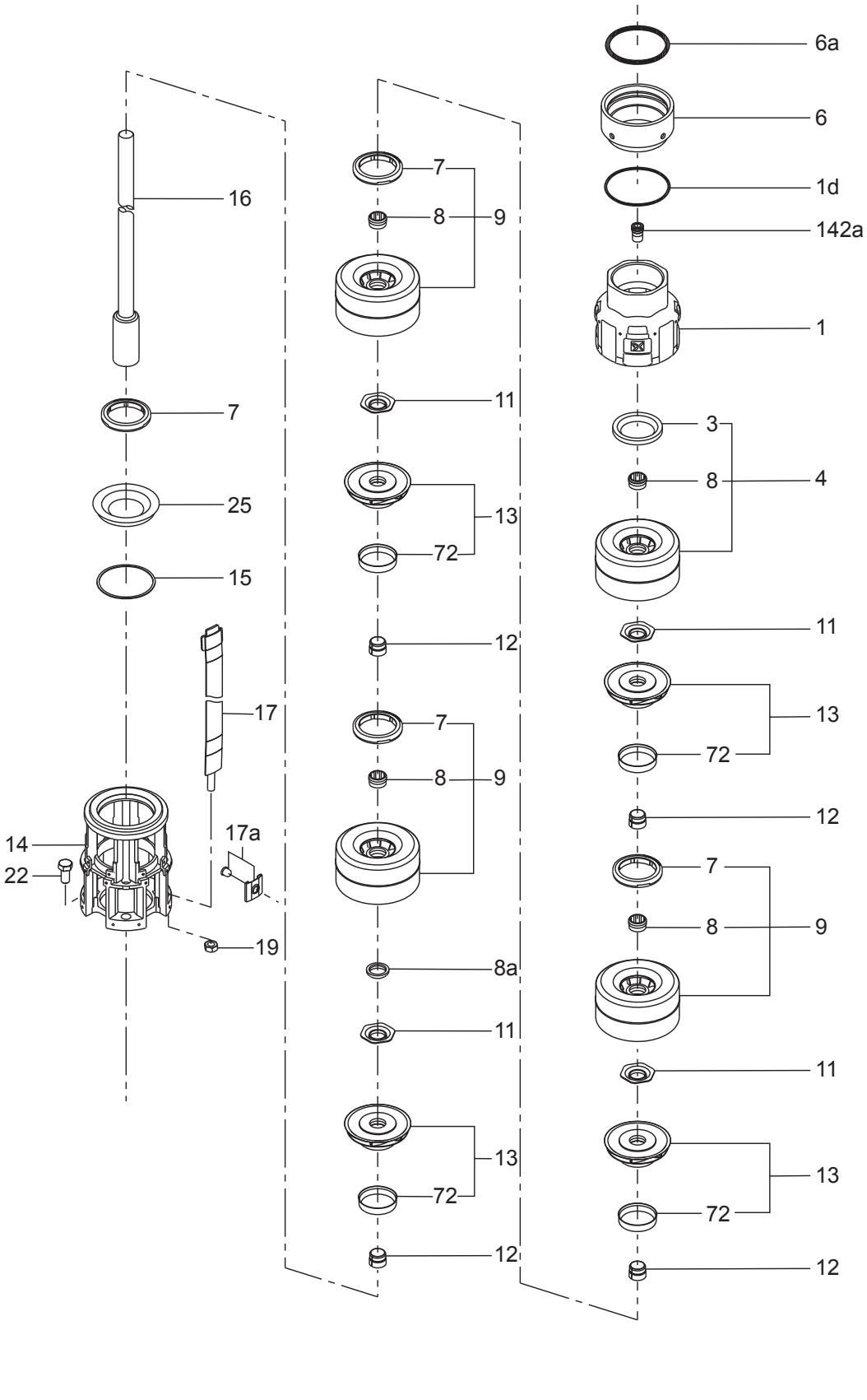

BMShs 30 pump

Chamber, intermediate

Pos.	Description/kit No	96592007	97755615
9	Inlet part	1	5

Chamber, top

Pos.	Description/kit No	97937856
4	Chamber, top	1

Chamber, bottom

Pos.	Description/kit No	96592006
10	Chamber, bottom	1

Impeller set

Pos.	Description/kit No	96903206	96603156
11	Inlet part	1	5
12	Split cone	1	5
13	Impeller	1	5

Retainer for seal ring

Pos.	Description/kit No	96551251
25	Retainer	10

Seal ring

Pos.	Description/kit No	96537825
7	Seal ring	10

Shaft

Pos.	Description/kit No	97945368
16	Shaft	1

Strap

Pos.	Description/kit No	97937177
17	Strap	1

Suction interconnector

Pos.	Description/kit No	97937784
14	Suction interconnector	1

Valve casing

Pos.	Description/kit No	97937790
1	Valve casing	1

BMShs 30 pump

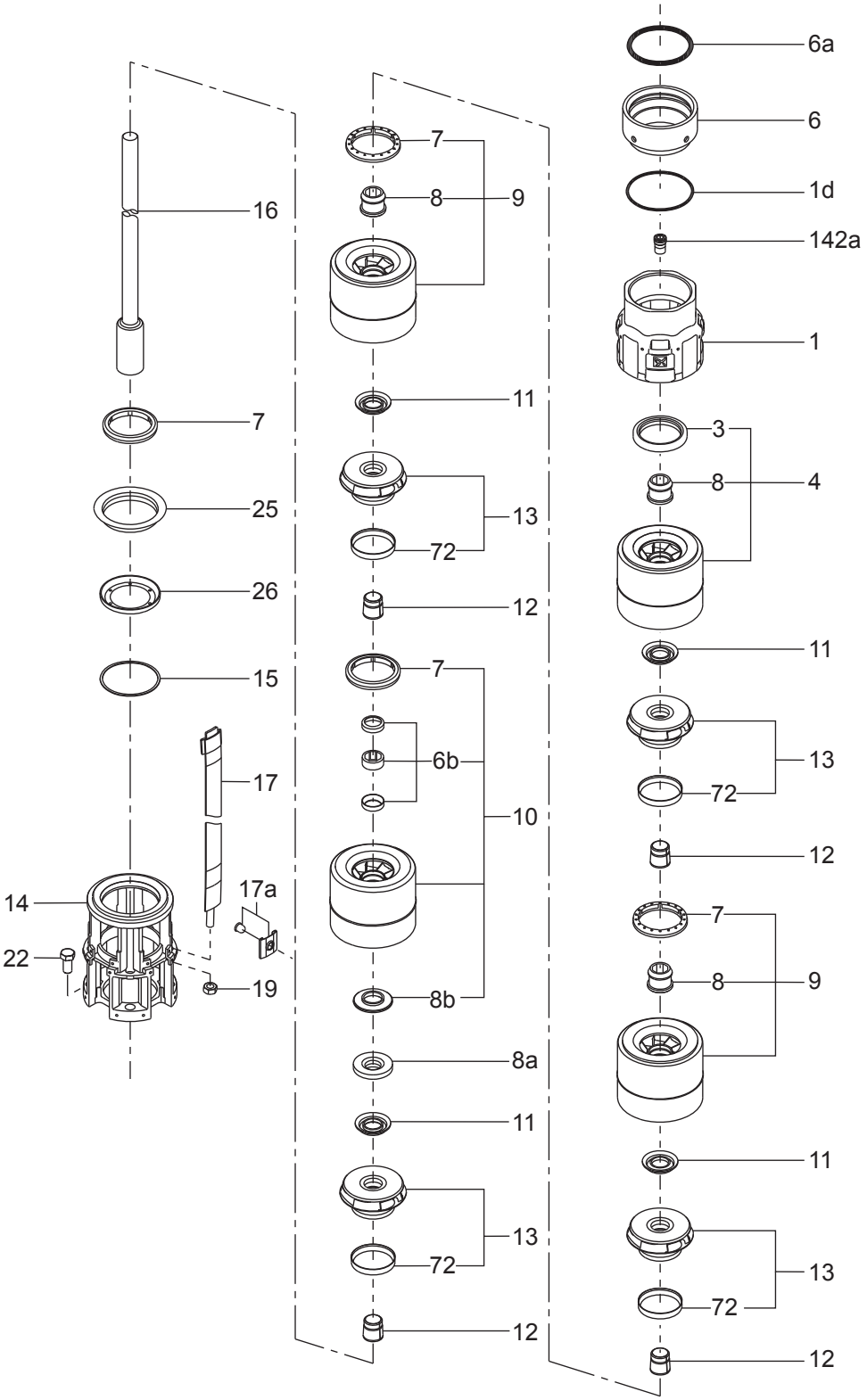

TM060045

BMShs 46/60 pump

Chamber, intermediate

Pos.	Description/kit No	96592007	97755615
9	Inlet part	1	5

Chamber, top

Pos.	Model	46	60
	Description/kit No	97937862	97937868
4	Chamber, top	1	1

Chamber, bottom

Pos.	Model	46	60
	Description/kit No	96592072	97756319
10	Chamber, bottom	1	1

Impeller set

Pos.	Model	46		60	
	Kit No	96903208	96915608	96903216	96903217
	Description				
11	Inlet part	1	5	1	5
12	Split cone	1	5	1	5
13	Impeller	1	5	1	5

Impeller set down

Pos.	Description/kit No	97657587	97657772
11c	Inlet part	1	1
12	Split cone	1	1
13	Impeller	1	1

Seal ring, bottom

Pos.	Description/kit No	96551252
68	Seal ring	1

Shaft

Pos.	Description/kit No	97945483
16	Shaft	1

Strap

Pos.	Description/kit No	97937240
17	Strap	1

Suction interconnector

Pos.	Description/kit No	97937784
14	Suction interconnector	1

Valve casing

Pos.	Description/kit No	97937790
1	Valve casing	1

Washer for stop ring

Pos.	Description/kit No	96551251
88	Washer	1

BMShs 46/60 pump

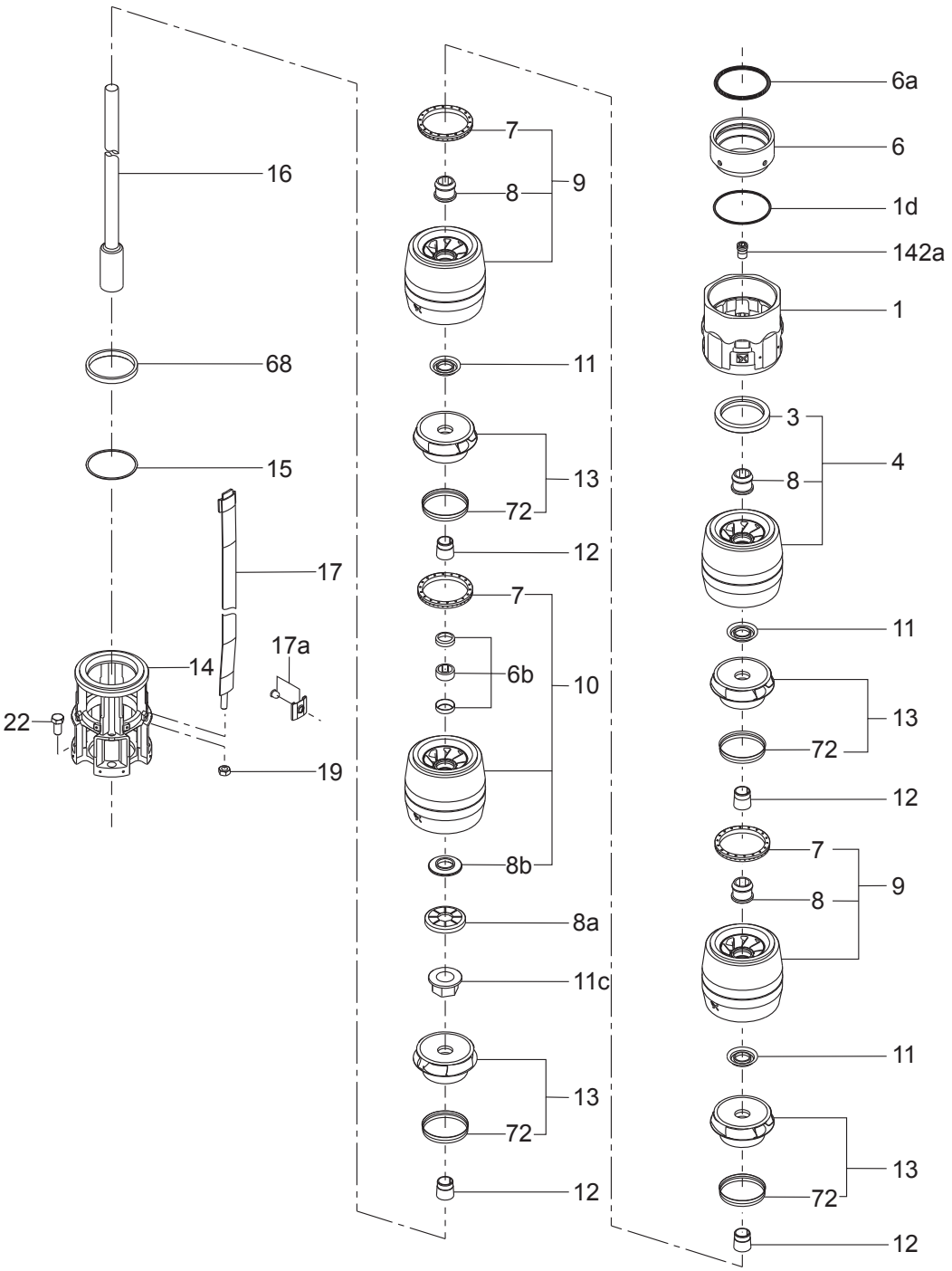

TM060044

6. Booster modules

BM, BMB 4"

BM (model D), BMB (model A) 50/60 Hz

Cable entry

Description	BM 4” with MS4000	BMB 4” with MS4000
Kit No	*96871602*	*96871605*
Cable entry	1	1

Wear parts

Pos.	Pump type	BM, BMB 3A N / BM, BMB 5A N					
	Pump stages	**11-15**	**16-24**	**25-30**	**31-39**	**40-48**	**49-60**
	Description/ Kit No	*055504*	*105546*	*105547*	*105059*	*095059*	*095060*
6	Upper bearing	1	1	1	1	1	1
7	Neck ring	15	24	30	39	48	60
85	Stop ring	2	3	3	3	3	3

Pos.	Pump type	BM, BMB 3A NE / BM, BMB 5A NE				
	Pump stages	**-12**	**-25**	**-33**	**-45**	**-60**
	Description/Kit No	*96440231*	*96440230*	*96440229*	*96440228*	*96440227*
6	Upper bearing	1	1	1	1	1
7	Neck ring	12	25	33	45	60
85	Stop ring	2	3	3	3	3

Pos.	Pump type	BM, BMB 3A R, BM, BMB 5A R							
	Number of stages	**-5**	**6-10**	**11-15**	**16-24**	**25-30**	**31-39**	**40-48**	**49-60**
	Description/ Kit No	*105969*	*105970*	*105971*	*105972*	*105973*	*105974*	*105975*	*105976*
6	Upper bearing	1	1	1	1	1	1	1	1
7	Neck ring	5	10	15	24	30	39	48	60
85	Stop ring	1	2	2	3	3	3	3	3

Pos.	Pump type	BM, BMB 8A R			
	Number of stages	**5-10**	**12-18**	**21-25**	**28-37**
	Description/Kit No	*96428935*	*96428936*	*96428937*	*96428938*
6	Upper bearing	1	1	1	1
7	Neck ring	10	18	25	37
8	Bearing	9	17	24	36

Pos.	Pump type	BM, BMB 8 A N				BM, BMB 8 A NE			
	Pump stages	**-10**	**-18**	**-25**	**-37**	**-10**	**-18**	**-25**	**-37**
	Description/Kit No	*96428935*	*96428936*	*96428937*	*96428938*	*96428939*	*96428940*	*96428941*	*96441561*
6	Upper bearing	1	1	1	1	1	1	1	1
7	Neck ring	10	18	25	37	10	18	25	37
8	Bearing	9	17	24	36	9	17	24	36

BM, BMB 4"

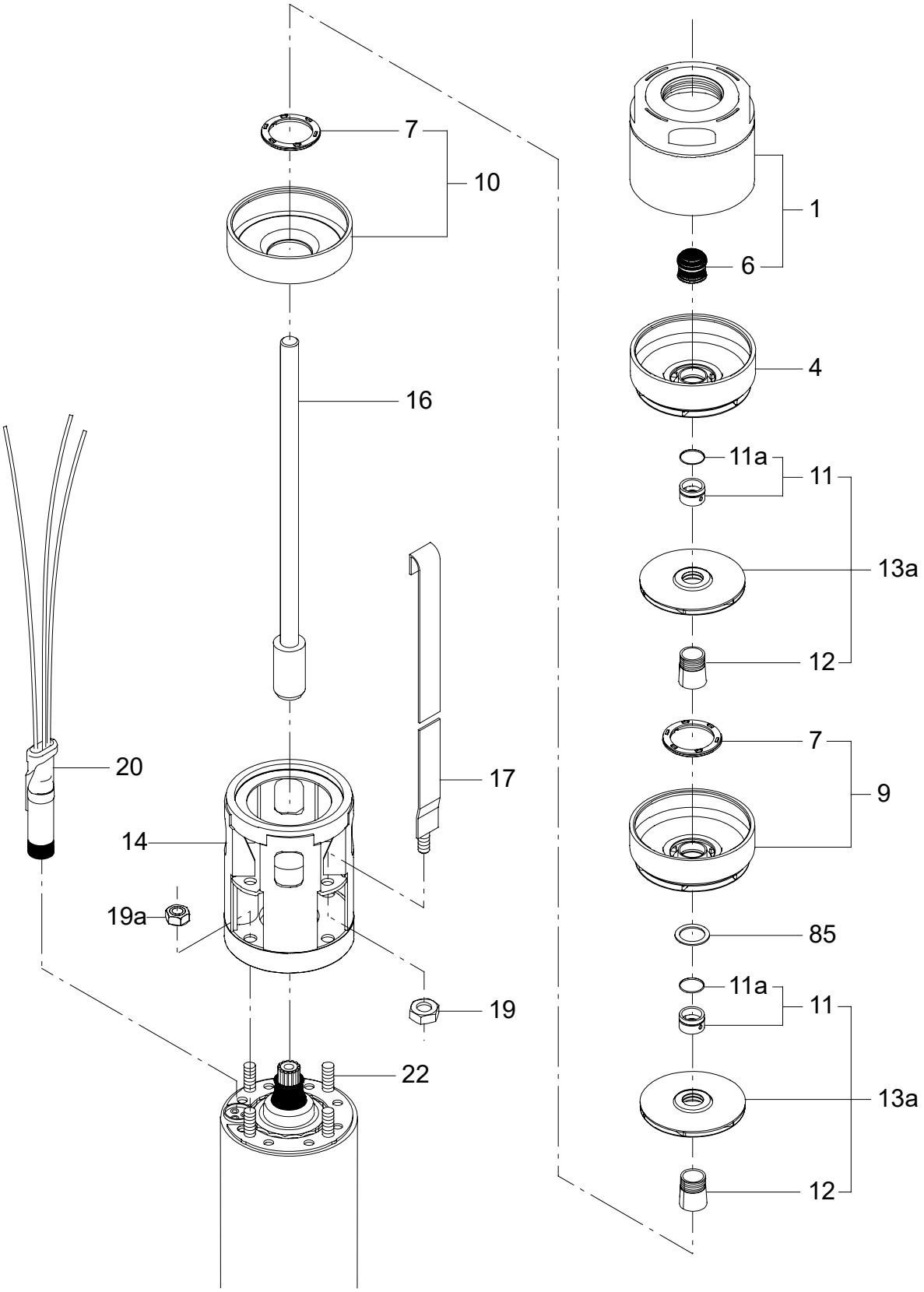
7
10
16
20
14
19a
17
19
22
1
6
4
11a
11
13a
12
7
9
85
11a
11
13a
12
TM032102

BM, BMB 6", 8"

BM (models C and D), BMB (model A) 50/60 Hz

Cable entry

Description	BM 6" - MS 4000	BMB 6" - MS 4000	BM 6" - MS 6000	BMB 6" - MS 6000	BM 8" - MS 6000	BMB 8"- MS 6000
Kit No	*96871603*	*96871606*	*96871604*	*96871607*	*96871604*	*96871607*
Cable entry	1	1	1	1	1	1

Wear parts

Pos.	Pump type	BM, BMB 17 (6")							
	Version	**S, NS, R**				**NES**			
	Pump stages	**-5**	**-16**	**-24**	**-40**	**-5**	**-16**	**-26**	**-40**
	Description/Kit No	*96421723*	*96421724*	*96421725*	*96440238*	*96440235*	*96440233*	*96440237*	*96440239*
7	Neck ring	5	16	26	40	5	16	26	40
8	Bearing	5	16	26	40	5	16	26	40
8a	Spacing washer	1	1	1	1	1	1	1	1
72	Wear ring	5	16	26	40	5	16	26	40

Pos.	Pump type	BM, BMB 30							
	Version	**S, NS, R**				**NES**			
	Pump stages	**-5**	**-16**	**-27**	**-35**	**-5**	**-16**	**-27**	**-35**
	Description/Kit No	*96421732*	*96421733*	*96421734*	*96440246*	*96440241*	*96440243*	*96440245*	*96440247*
6	Upper bearing	1	1	1	1	1	1	1	1
6b	Lower bearing	1	1	1	1	1	1	1	1
7	Neck ring	5	16	27	35	5	16	27	35
8	Bearing	3	14	25	33	3	14	25	33
8a	Spacing washer	1	1	1	1	1	1	1	1
8b	Stop ring	1	1	1	1	1	1	1	1
25	Neck ring retainer	1	1	1	1	1	1	1	1
72	Wear ring	5	16	27	35	5	16	27	35

Pos.	Pump type	BM, BMB 46							
	Version	**S, NS, R**				**NES**			
	Pump stages	**-6**	**-10**	**-16**	**-24**	**-6**	**-10**	**-16**	**-24**
	Description/ Kit No	*96440248*	*96440250*	*96440252*	*96440254*	*96440249*	*96440251*	*96440253*	*96440255*
6	Upper bearing	1	1	1	1	1	1	1	1
6b	Lower bearing	1	1	1	1	1	1	1	1
7	Neck ring	5	9	15	23	5	9	15	23
8	Bearing	4	8	14	22	4	8	14	22
8a	Spacing washer	1	1	1	1	1	1	1	1
8b	Stop ring	1	1	1	1	1	1	1	1
11c	Nut for stop ring	1	1	1	1	1	1	1	1
68	Lower neck ring	1	1	1	1	1	1	1	1
72	Wear ring	6	10	16	24	6	10	16	24

Pos.	Pump type	BM, BMB 60							
	version	**S, NS, R**				**NES**			
	Pump stages	**-6**	**-10**	**-16**	**-22**	**-6**	**-10**	**-16**	**-22**
	Description/Kit No	*96440369*	*96440371*	*96440373*	*96440375*	*96440370*	*96440372*	*96440374*	*96440376*
6	Upper bearing	1	1	1	1	1	1	1	1
6b	Lower bearing	1	1	1	1	1	1	1	1
7	Neck ring	5	9	15	21	5	9	15	21
8	Bearing	4	8	14	20	4	8	14	20
8a	Spacing washer	1	1	1	1	1	1	1	1

Pos.	Pump type	BM, BMB 60							
	version	S, NS, R				NES			
	Pump stages	-6	-10	-16	-22	-6	-10	-16	-22
	Description/Kit No	*96440369*	*96440371*	*96440373*	*96440375*	*96440370*	*96440372*	*96440374*	*96440376*
8b	Stop ring	1	1	1	1	1	1	1	1
11c	Nut for stop ring	1	1	1	1	1	1	1	1
68	Lower neck ring	1	1	1	1	1	1	1	1
72	Wear ring	6	10	16	22	6	10	16	22

BM, BMB 6"

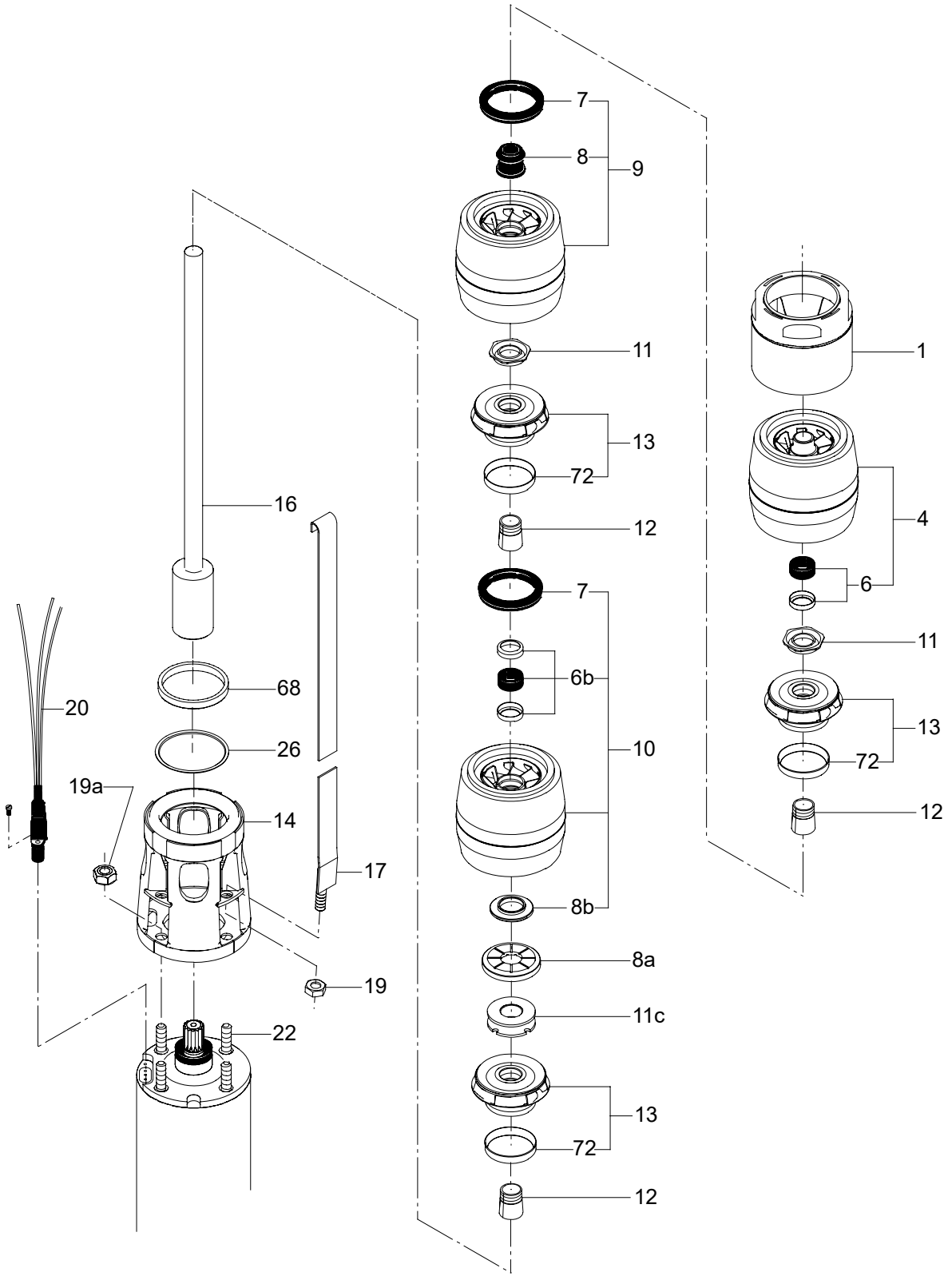
7
8
9
11
13
72
12
7
6b
10
8b
8a
11c
13
72
12
1
4
6
11
13
72
12
16
68
26
20
19a
14
17
19
22
TM014194

Pos.	Pump type	BM, BMB 77 (8")					
	Version	S, NS, R			NES		
	Pump stages	-8	9-14	15-20	-8	9-14	15-20
	Description/ Kit No	*96440256*	*96440258*	*96440260*	*96440257*	*96440259*	*96440261*
1d	O-ring	1	1	1	1	1	1
6b	Lower bearing	1	1	1	1	1	1
7	Neck ring	8	14	20	8	14	20
8	Bearing	4	5	8	4	5	8
8a	Washer for stop ring	1	1	1	1	1	1
8b	Stop ring	1	1	1	1	1	1
11c	Nut for stop ring	1	1	1	1	1	1
72	Wear ring	8	14	20	8	14	20

Pos.	Pump type	BM, BMB 95 (8")					
	Version	S, NS, R			NES		
	Pump stages	-8	9-14	15-20	-8	9-14	15-20
	Description/ Kit No	*96440715*	*96440716*	*96440717*	*96440718*	*96440719*	*96440720*
1d	O-ring	1	1	1	1	1	1
6b	Lower bearing	1	1	1	1	1	1
7	Neck ring	8	14	20	8	14	20
8	Bearing	4	5	8	4	5	8
8a	Washer for stop ring	1	1	1	1	1	1
8b	Stop ring	1	1	1	1	1	1
11c	Nut for stop ring	1	1	1	1	1	1
72	Wear ring	8	14	20	8	14	20

Pos.	Pump type	BM, BMB 125 (8")					
	Version	S, NS, R			NES		
	Pump stages	-4	5-6	7-9	-4	5-6	7-9
	Description/Kit No	*96440262*	*96440264*	*96440266*	*96440263*	*96440265*	*96440267*
1d	O-ring	1	1	1	1	1	1
5	Stop disc	1	1	1	1	1	1
6	Upper bearing	1	1	1	1	1	1
7	Neck ring	4	6	9	4	6	9
8	Bearing	3	5	8	3	5	8
72	Wear ring	4	6	9	4	6	9

Pos.	Pump type	BM 160 (8")			
	Version	S, NS, R		NES	
	Pump stages	-5	6-9	-5	6-9
	Description/ Kit No	*205117*	*205118*	*97891543*	*97891544*
1d	O-ring	1	1	1	1
5	Stop disc	1	1	1	1
6	Upper bearing	1	1	1	1
7	Neck ring	5	9	5	9
8	Bearing	4	8	4	8
72	Wear ring	5	9	5	9

Pos.	Pump type	BM 215 (8")					
	Version	S, NS, R			NES		
	Pump stages	-2	3-4	5-7	-2	3-4	5-7
	Description/ Kit No	*185033*	*185034*	*185035*	*97891545*	*97891546*	*97891547*
1d	O-ring	1	1	1	1	1	1
5	Stop disc	1	1	1	1	1	1
6	Upper bearing	1	1	1	1	1	1
7	Neck ring	2	4	7	2	4	7
8	Bearing	1	3	6	1	3	6
72	Wear ring	2	4	7	2	4	7

BM, BMB 8"

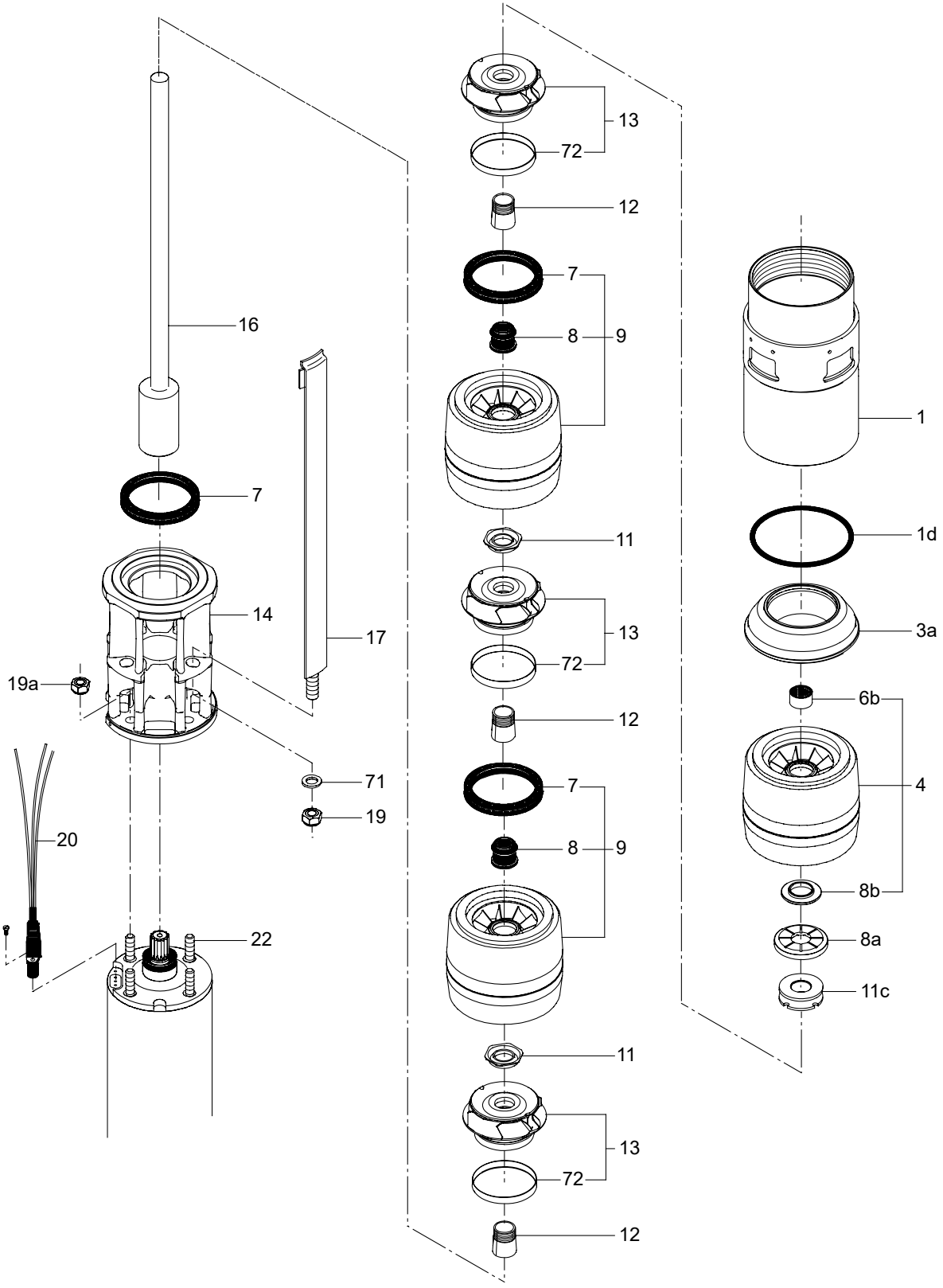
13
72
12
7
8
9
16
1
7
11
1d
14
17
13
3a
19a
72
6b
12
71
7
4
19
20
8
9
8b
22
8a
11c
11
13
72
12
TM013451

BME, BMET, BMEX

50/60 Hz

Grease

Description	Motor	Kit No
Grease Unirex 2N, 400 g cartridge	ABB	*96616737*
Grease Klüberquiet BQ 72-72, 400 g cartridge	VEM	*96616736*
Grease Unirex N3	Siemens	*96741461*

Pulley head complete

Description	Kit No
7 grooves	*96693978*
9 grooves	*96693979*

Pulley head turbine, complete (BMET only)

Description	Quantity	Kit No
Pulley head turbine complete	1	*96863885*

Seal kit

Pos.	Description/Kit No		BME	BMET
			145177	*145178*
360a	Bearing		1	3
361a	O-ring	144.5 x 3	2	2
365a		154.5 x 3	1	1
366a	Axial bearing		1	1
372a	O-ring	139.5 x 3	1	2
376	Seal ring	75 x 61 x 8	1	-
379	V-ring FKM 60 A		1	-
382	O-ring	109.5 x 3	1	-
385	Seal ring	70 x 50 x 10	1	-
386	O-ring	99.5 x 3	1	-
389	Seal ring	35 x 25 x 7	-	2
396	O-ring	42 x 1.6	-	2
397		36.2 x 3	-	2
82 [1]		74.2 x 5.7	1	1
-	Sealing compound		-	1

[1] Position number is from the pump parts list.

Tools

Description	Kit No
V-belt tension tester	*96575457*
V-belt gauge	*96575458*
Grease gun	*96656481*

Pulley head

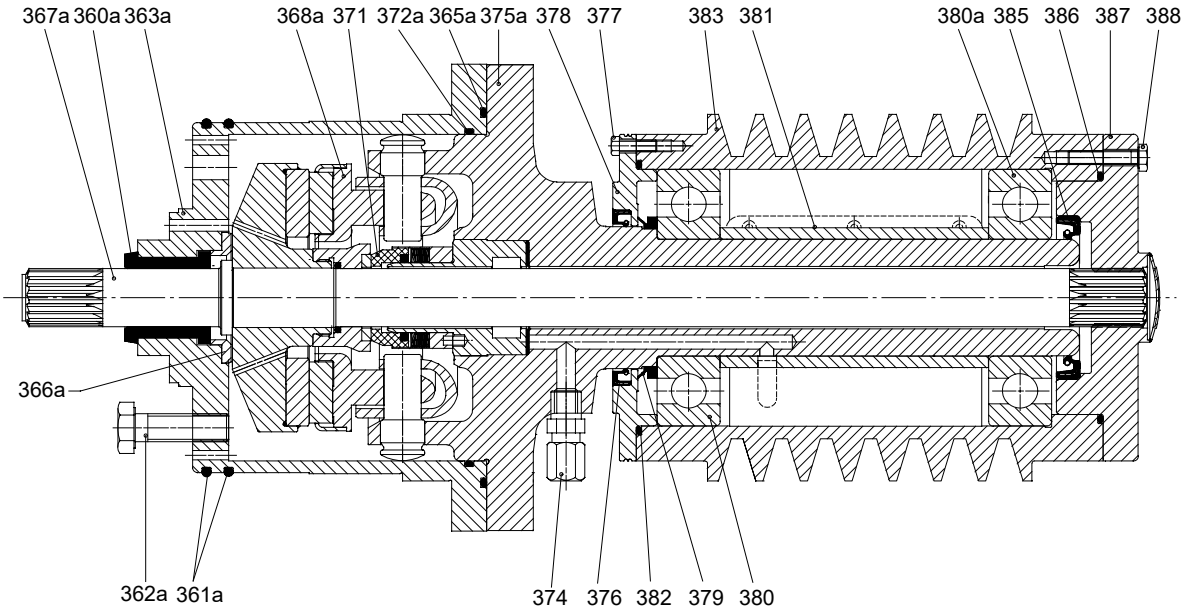

Pulley head, BMT

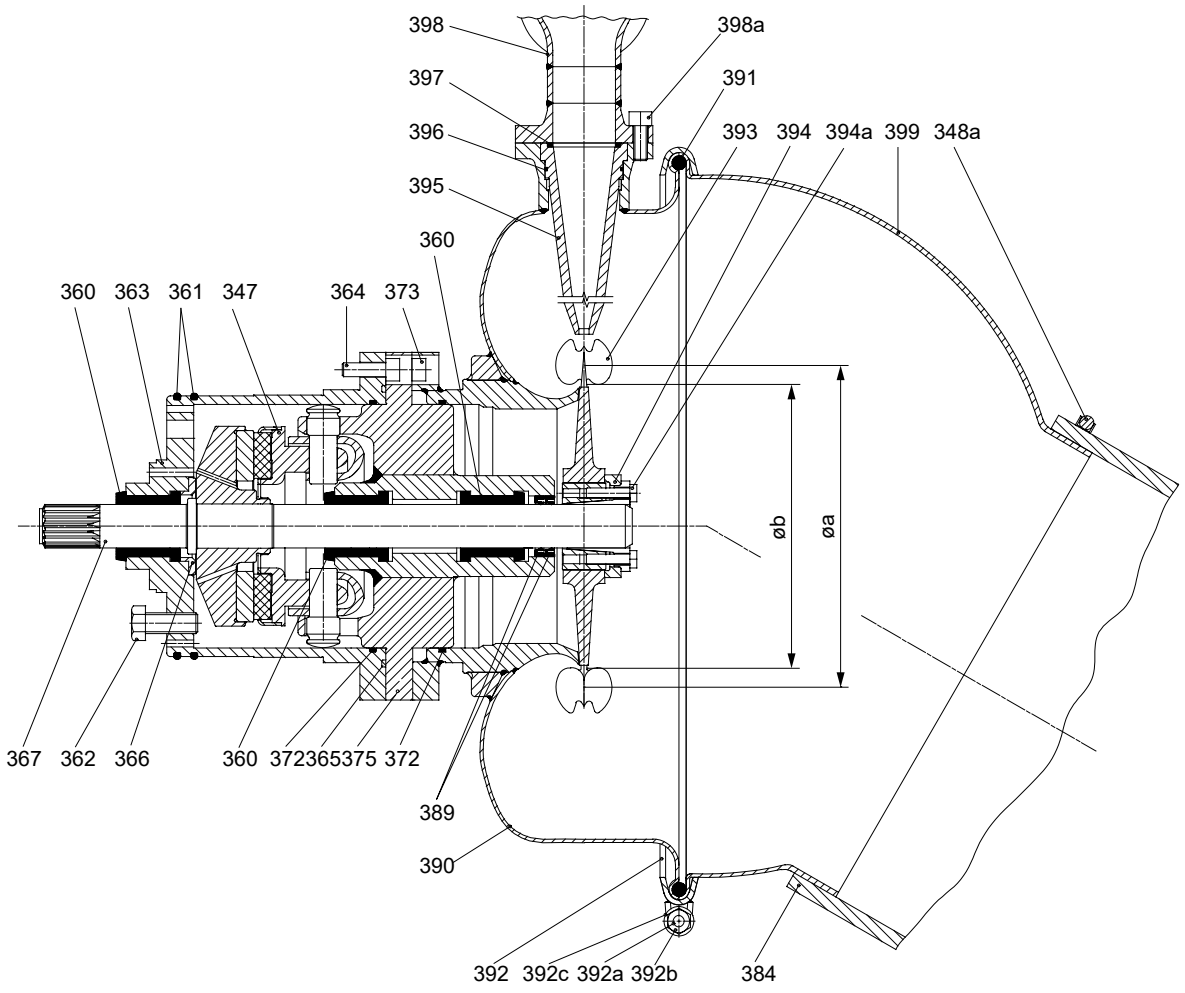

Wear parts

BME, BMET 17

Pos.	Pump type	N, NS, R versions		
	Pump stages	**-10**	**-20**	**-30**
	Kit No	***96604294***	***96604295***	***96604296***
	Description			
6	Top bearing	1	1	1
7	Neck ring	10	20	30
8	Bearing	9	19	29
8a	Spacing washer	1	1	1
72	Wear ring	10	20	30

BME, BMET 30

Pos.	Pump type	N, NS, R versions		
	Pump stages	**-10**	**-18**	**-26**
	Kit No	***96604297***	***96604298***	***96604299***
	Description			
6	Top bearing	1	1	1
6B	Lower bearing	1	1	1
7	Neck ring	10	18	26
8	Bearing	8	16	24
8a	Spacing washer	1	1	1
8b	Stop ring	1	1	1
25	Neck ring retainer	1	1	1
72	Wear ring	10	18	26

BME, BMET 46

Pos.	Pump type	N, NS, R versions		
	Pump stages	**-8**	**-13**	**-17**
	Kit No	***96604330***	***96604331***	***96604333***
	Description			
6	Top bearing	1	1	1
6B	Lower bearing	1	1	1
7	Neck ring	7	12	16
8	Bearing	6	11	15
8a	Spacing washer	1	1	1
8b	Stop ring	1	1	1
11c	Nut for stop ring	1	1	1
68	Lower neck ring	1	1	1
72	Wear ring	8	13	17

BME, BMET 60

Pos.	Pump type	N, NS, R versions		
	Pump stages	**-8**	**-13**	**-17**
	Kit No	***96604334***	***96604335***	***96604336***
	Description			
6	Top bearing	1	1	1
6B	Lower bearing	1	1	1
7	Neck ring	7	12	16
8	Bearing	6	11	15
8a	Spacing washer	1	1	1
8b	Stop ring	1	1	1
11c	Nut for stop ring	1	1	1
68	Lower neck ring	1	1	1
72	Wear ring	8	13	17

Wear parts

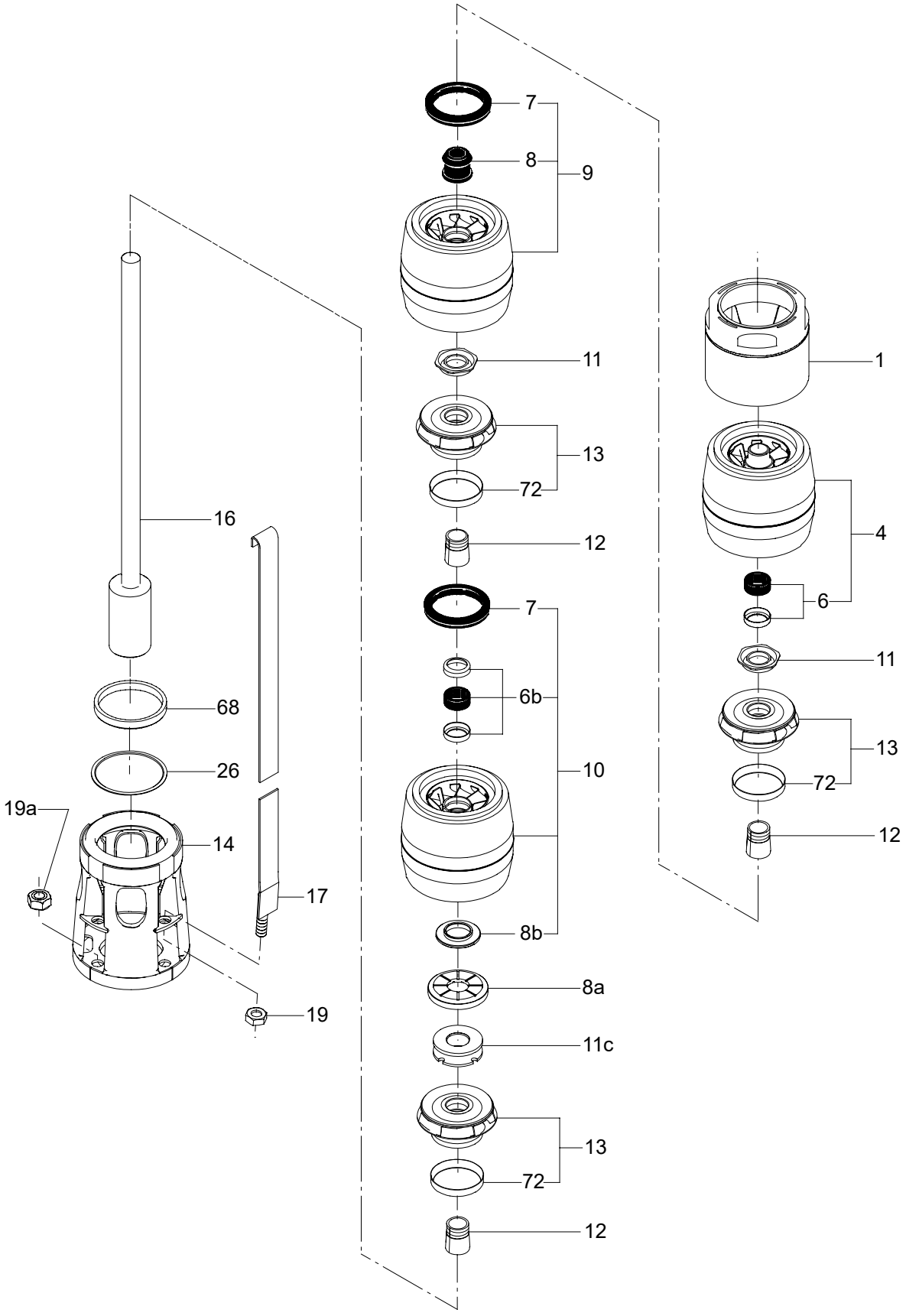
7
8
9
11
13
72
12
7
6b
10
8b
8a
11c
13
72
12
1
4
6
11
13
72
12
16
68
26
19a
14
17
19
TM032943

7. CH, CHN, CHI, CHIU, CHIE

CH, CHN 2, CH, CHN 4

50/60 Hz, Models F, H, I, K

Bearing

Pos.	Pump type	All models
	Kit No	435006
	Description	
26	Screw	4
26	Washer	4
28	Screw	4
37	Gasket	6
62	Stop ring	1
67	Lock nut	1
79	Diverting disc	1
153	Ball bearing	1
154	Ball bearing	1
155	Bearing cover plate	1
158	Corrugated spring	1
159	O-ring	1

Chamber stack

Pos.	Pump type	CH4, CHN4
	Pump stages	5-6
	Kit No	96607936
	Description	
49	Impeller complete	6
4a	Chamber with bearing, polished	1
4	Chamber complete, polished	4

Fan

Pos.	Pump type	CH2, CH4
	Kit No	96904953
	Description	
151	Fan cover	1
152	Screw for fan cover	2
156	Fan	1

Shaft seal

Pos.	Pump type	All models				
	Kit No	985164	985848	985737	985751	96586305
	Description	CVBE/V	AUUE/V	RUUE/V	CVUE/V	AQQE/V
37	Gasket	11	11	11	11	11
62	Stop ring	1	1	1	1	1
67	Lock nut	1	1	1	1	1
105	O-ring (1 FKM + 1 EPDM)	1	1	1	1	1
	Shaft seal	1	1	1	1	1
	O-ring (1 FKM + 1 EPDM)	1	1	1	1	1

Wear parts

Pos.	Pump type	CH2	CH2	CH4	CH4
	Pump stages	2-5	6	2-4	5-6
	Kit No	435002	435039	445004	445017
	Description				
4a	Chamber	-	1	-	1
37	Gasket	5	6	4	6
45	Neck ring	5	6	-	-
47a	Bearing ring	-	1	-	1
49	Impeller	1	1	1	1
62	Stop ring	1	1	1	1
64	Spacing pipe	-	-	2	4
64a	Spacing pipe	-	1	-	-
65	Neck ring retainer	5	6	-	-
66	Washer	1	1	1	1
67	Lock nut	1	1	1	1
79	Diverting disc	1	1	1	1

CH, CHN 2, CH, CHN 4

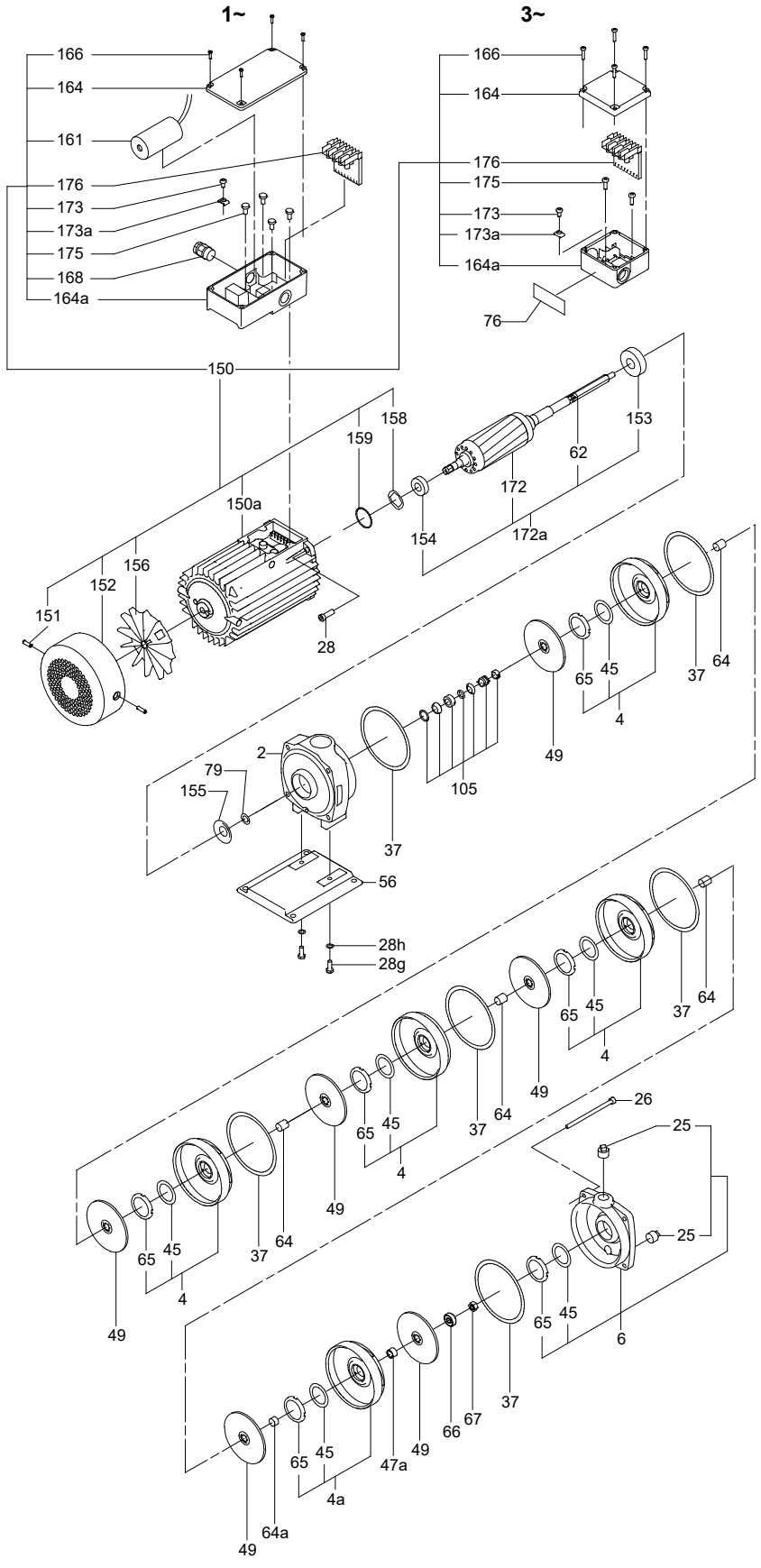

TM032038

CH 8, CH 12

50/60 Hz, Models A, B, C, K

Fan

Pos.	Pump type	CH12-40, -60
	Kit No	*96904958*
	Description	
151	Fan cover	1
152	Screw for fan cover	4
156	Fan	1

Shaft seal

Pos.	Pump type	All models				
	Kit No	*4N5012*	*4N5013*	*96416347*	*96416348*	*96586306*
	Description	CVBE/V	CVBE/V	AUUE/V	RUUE/V	AQQE/V
37	Gasket	2	2	2	2	2
37a	Gasket	1	1	1	1	1
45	Neck ring	-	3	-	-	-
65	Neck ring retainer	-	3	-	-	-
67	Lock nut	1	1	1	1	1
79	Diverting disc	-	1	-	-	-
105	Shaft seal complete	1	1	1	1	1
	O-ring (1 FKM + 1 EPDM)	1	1	1	1	1

Wear parts

Pos.	Pump type	CH8-20/25/30	CH8-40/50/60	CH12-10/20/25/30	CH12-40/50/60
	Kit No	*96604263*	*96604265*	*96604268*	*96604270*
	Description				
49a	Impeller with reduced diameter	2	1	1	1
49	Impeller	1	3	1	3
66	Clamp	1	1	1	1
67	Lock nut	1	1	1	1
37	Gasket	2	2	2	2
37a	Gasket	1	1	1	1
45	Neck ring	3	3	3	3
64	Spacing pipe	1	2	1	2
65	Neck ring retainer	3	3	3	3
79	Diverting disc	1	1	1	1

CH 8, CH 12

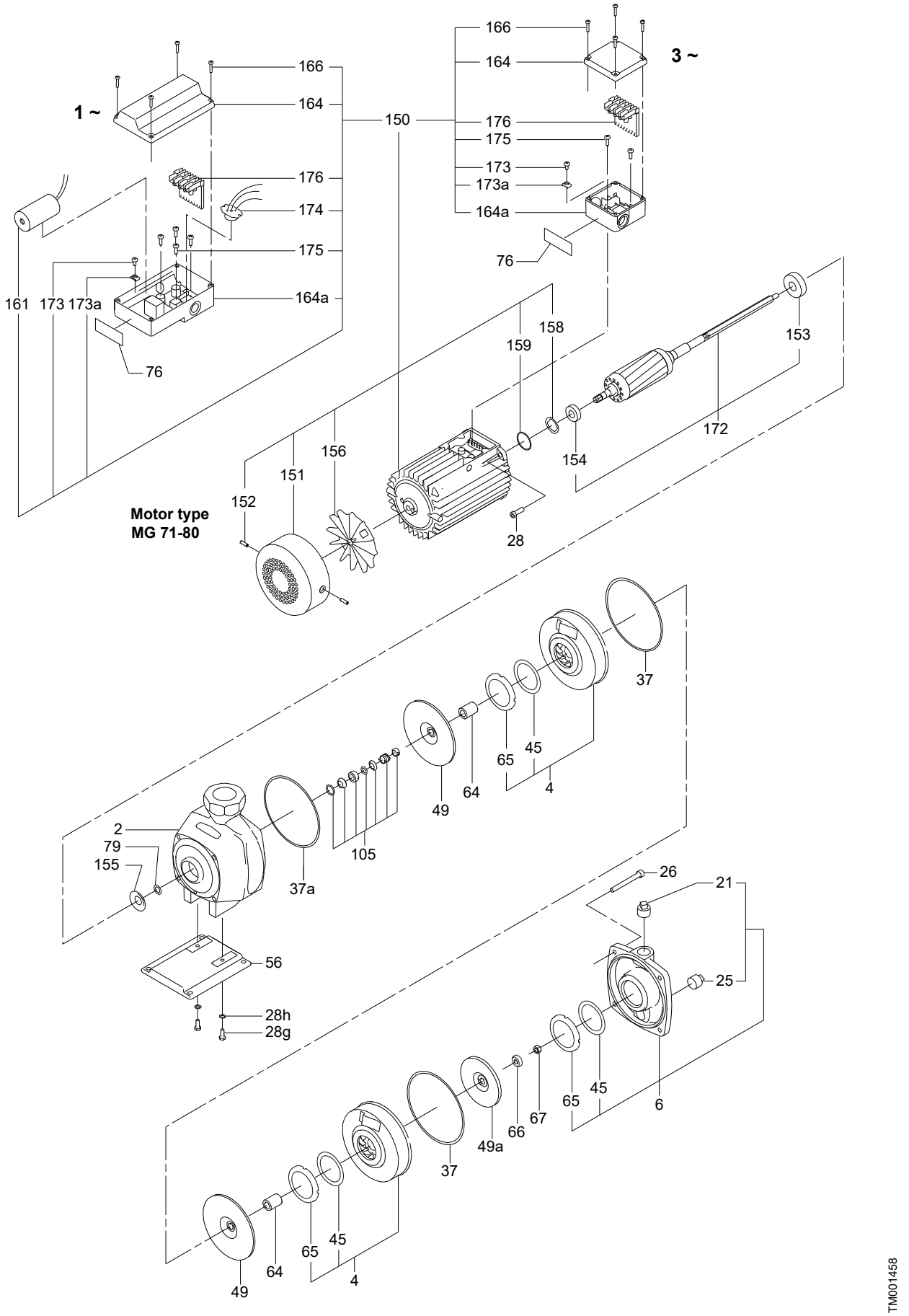
1 ~
3 ~
166
164
150
176
175
173
173a
164a
174
161
173
173a
76
158
159
153
172
154
156
151
152
Motor type
MG 71-80
28
37
65
45
4
49
64
2
79
155
105
37a
26
21
25
56
28h
28g
6
49a
66
67
TM001458

CHI, CHIE 2, 4

50/60 Hz, CHI Models B and C, CHIE model A

Bearing

Pos.	Description/kit No	*96960884*
153	Ball bearing	1
154	Ball bearing	1
157b	O-ring	1

Shaft seal

Pos.	Pump type	All models					
	Kit No	*004H5007*	*004H5008*	*004H5009*	*004H5010*	*96479922*	*96479921*
	Description	**BQQE**	**BQQV**	**BUBE**	**BUBV**	**BUUE**	**BUUV**
6b	O-ring	2	2	2	2	2	2
11	O-ring	1	1	1	1	1	1
11a	O-ring	1	1	1	1	1	1
27a	Nut	2	2	2	2	2	2
45	Neck ring	6	6	6	6	6	6
65	Neck ring retainer	6	6	6	6	6	6
67	Lock nut	1	1	1	1	1	1
72a	O-ring	1	1	1	1	1	1
79	Diverting disc	1	1	1	1	1	1
93	Screw	1	1	1	1	1	1
94	Nut	1	1	1	1	1	1
105	Shaft seal	1	1	1	1	1	1

CHI, CHIE 2, 4

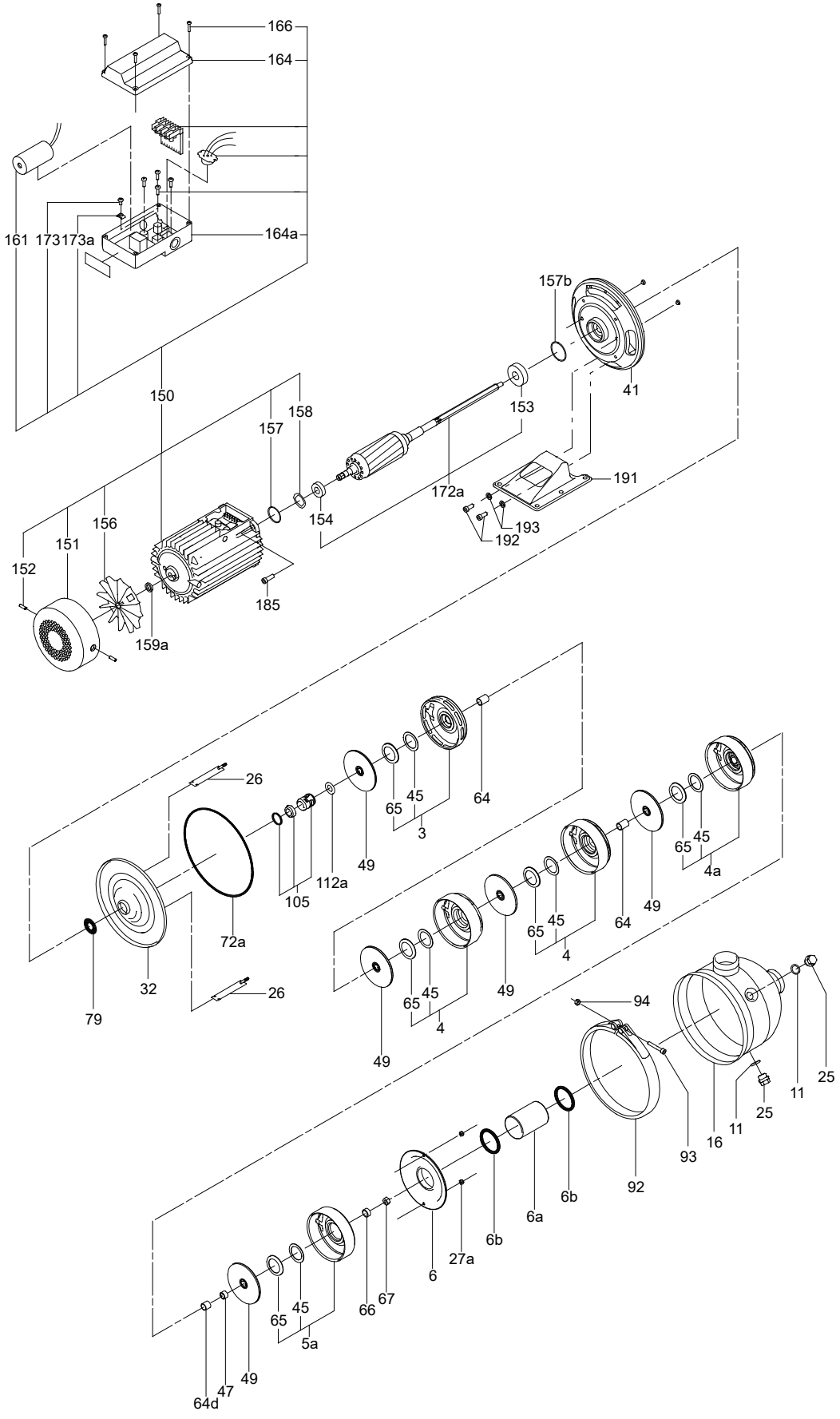

TM025227

CHI, CHIE 8, 10, 12

50/60 Hz, CHI models B, C and D,CHIE model A

Shaft seal

Pos.	Pump type	CHI (E)8 CHI (E)10 CHI (E)12	CHI(E) 8 CHI (E)10 CHI (E)12	CHI (E)8 CHI (E)12	CHI(E) 8 CHI(E) 12	CHI (E)8 CHI (E)10 CHI (E)12	CHI(E) 8 CHI (E)10 CHI(E) 12
	Kit No	***004F5012***	***004F5013***	***004F5019***	***004F5020***	***96481361***	***96481360***
	Description	**BQQE**	**BQQV**	**BUBE**	**BUBV**	**BUUE**	**BUUV**
6b	O-ring	1	1	1	1	1	1
11	O-ring	1	1	1	1	1	1
11a	O-ring	1	1	1	1	1	1
27	Washer	2	2	2	2	2	2
31	O-ring	1	1	1	1	1	1
41b	Plug	1	1	1	1	1	1
41c	Plug	1	1	1	1	1	1
45	Neck ring	3	3	3	3	3	3
65	Neck ring retainer	3	3	3	3	3	3
67	Lock nut	1	1	1	1	1	1
79	Diverting disc	1	1	1	1	1	1
93	Screw	1	1	1	1	1	1
94	Nut	1	1	1	1	1	1
105	Shaft seal	1	1	1	1	1	1

Pos. 41b and 41c have been discontinued in pumps produced after week 13, 1998. The model designation on the pump nameplate shows the production year and week. In the last part, P1YYWW, YY shows the production year and WW the production week.

CHI, CHIE 8, 10, 12

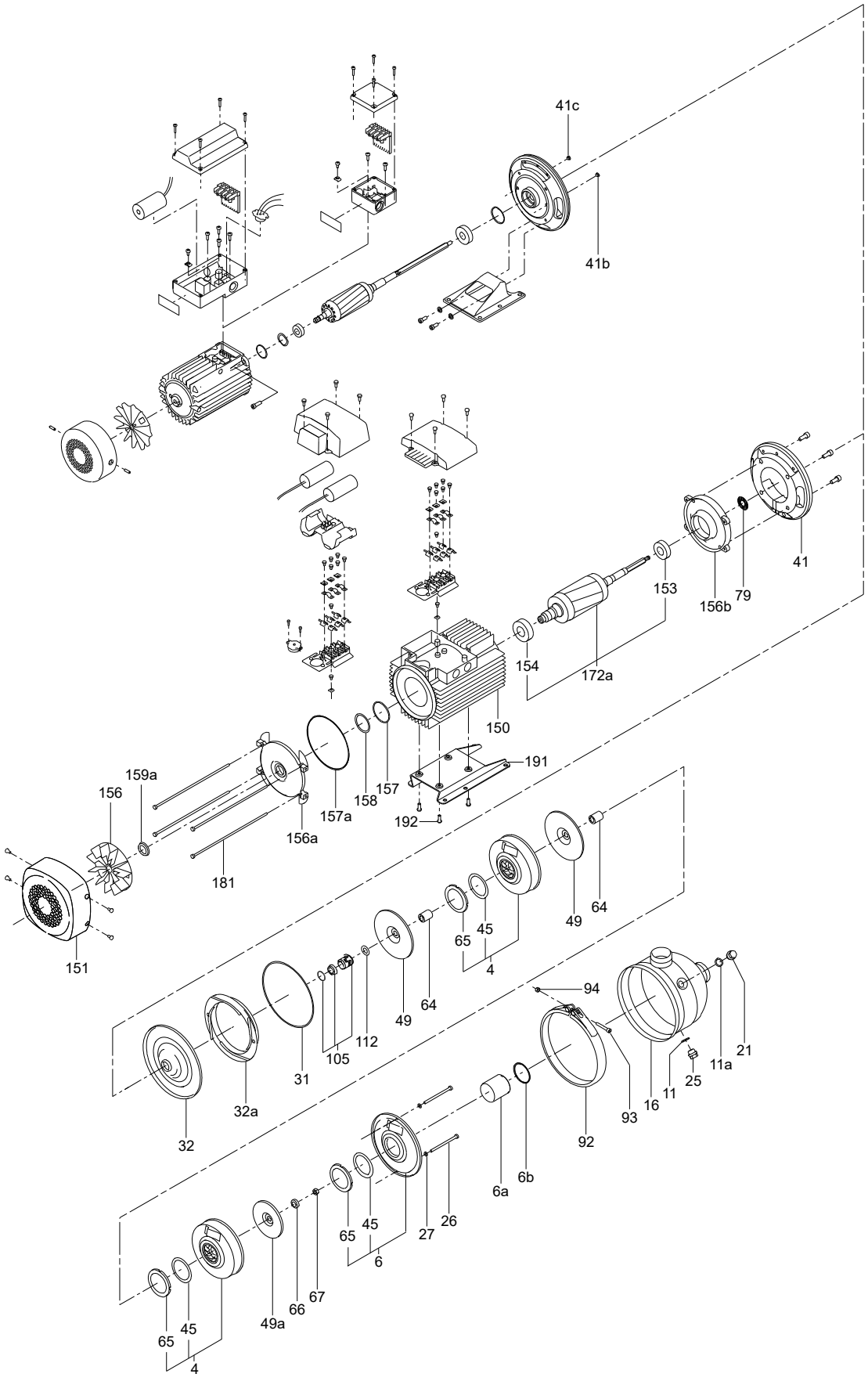

TM016215

CHIU 2, 4

50/60 Hz

Wear parts

Pos.	Pump type	CHIU 2, 4	CHIU 2, 4
	Pump version	EPDM	FKM
	Kit No	*96441246*	*96441247*
	Description		
6b	O-ring	2	2
11	O-ring	2	2
17a	Plug	1	1
27a	Lock nut	2	2
37	O-ring	1	1
45	Neck ring	4	4
65	Neck ring retainer	4	4
67	Lock nut	1	1
72a	O-ring	1	1
93	Screw	1	1
94	Lock nut	1	1
100	O-ring	1	1
157b	O-ring	1	1

CHIU 2, 4

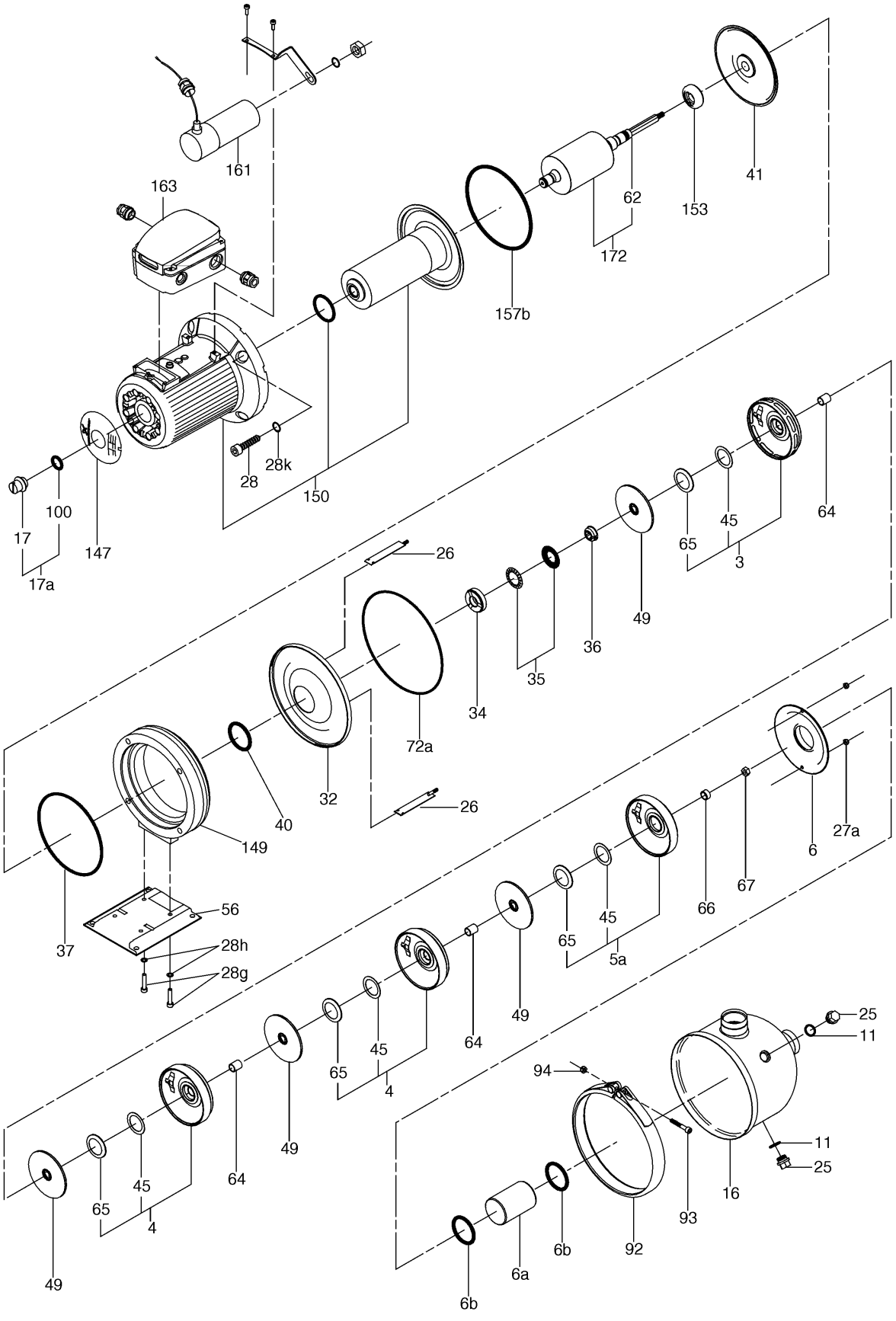

TM019074

CHI 15, 20

50/60 Hz, Model A

Shaft seal

Pos.	Seal type	BQQE	BQQV
	Description/kit No	*96649924*	*96649925*
105	Shaft seal	1	1
62	Stop ring	1	1

Bearing

Pos.	Description/kit No	*96293547*
153	Ball bearing	1
154	Ball bearing	1

Wear parts

Pos.	Seal type	BQQE	BQQV
	Description/kit No	*96293521*	*96293537*
6b	O-ring	1	1
11	O-ring	2	2
27	Washer	2	2
45	Neck ring	3	3
49c	Impeller wear ring	3	3
62	Stop ring	2	2
65	Neck ring retainer	3	3
66	Lock washer set	1	1
67	Lock nut	1	1
72a	O-ring	1	1
79	Diverting disc	1	1
93	Screw	1	1
94	Lock nut	1	1
105	Shaft seal	1	1

CHI 15, 20

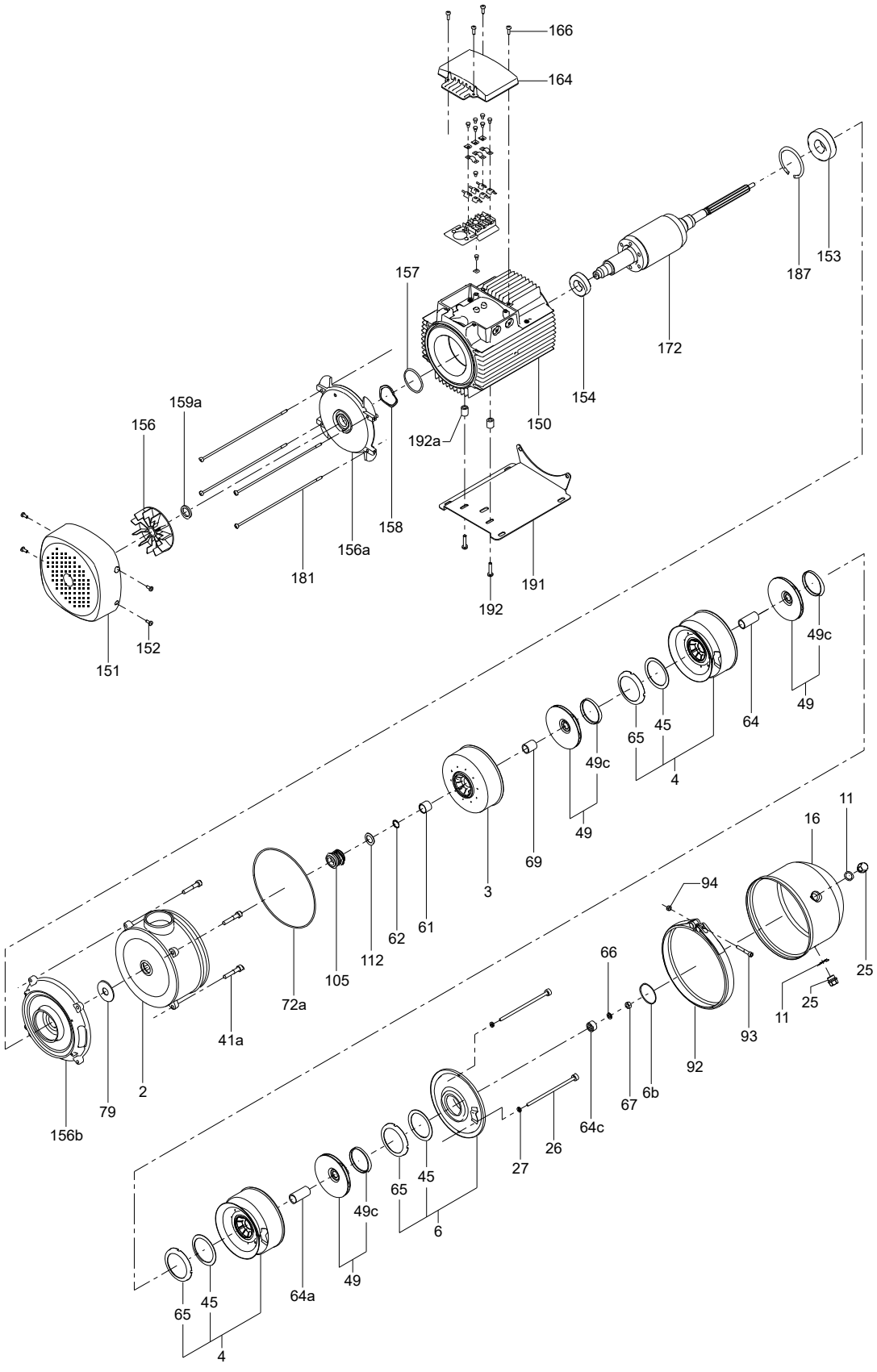

TM033486

8. CHK, CHV

CHK 2

50/60 Hz, Models A, B, C, D, E

Metal terminal box

Pos.	Models	All
	Kit No	***405179***
	Description	
164a	Terminal box with gasket	1
164	Terminal box cover with gasket	1
166	Screw	4
175	Screw	4
176	Terminal complete	1

Shaft seal

Pos.	Kit No	*435031*	*445068*
	Description	**CVBV**	**AUUV**
37	Gasket ∅110/103 x 0.25	1	1
62	Stop ring	1	1
105	Shaft seal	1	1

Wear parts

Pos.	Pump type	CHK 2-30/3-1 CHK 2-40/4-1	CHK 2-50/5-1 CHK 2-60/6-1 CHK 2-90/6-1 CHK 2-100/6-1 CHK 2-110/6-1
	Kit No	***435032***	***435033***
	Description		
4a	Bearing chamber	-	1
36	Nut	3	3
37	Gasket	1	1
45	Neck ring	4	5
47a	Bearing ring	-	1
62	Stop ring	1	1
65	Neck ring retainer	4	5
66	Washer	1	1
66a	Washer	3	3
67	Lock nut	1	1
69a	Spacing pipe 7.8 mm	1	1
122	Priming screw	1	1

CHK 2

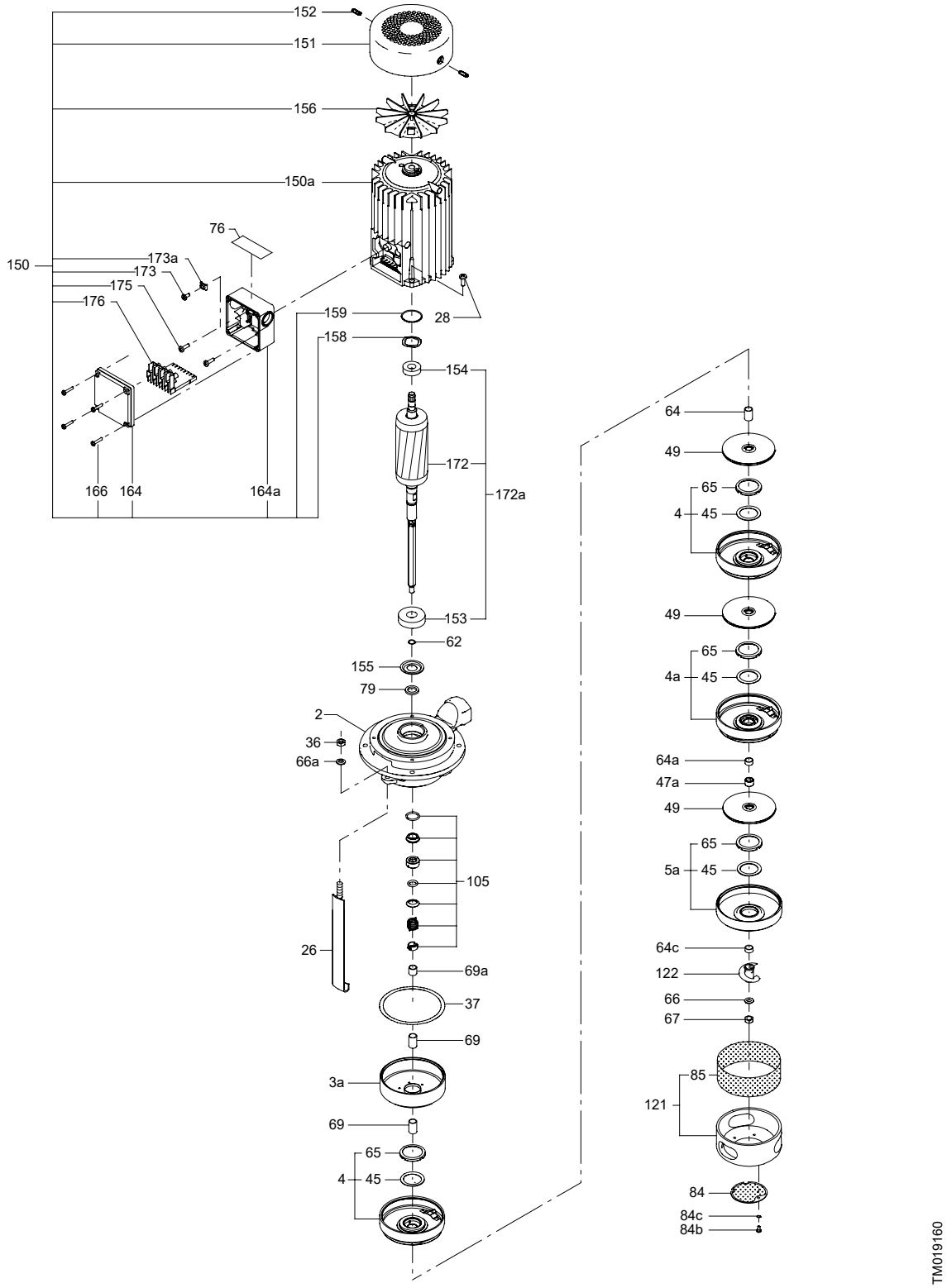
152
151
156
150a
76
150
173a
173
175
176
159
28
158
154
172
172a
166
164
164a
153
62
155
79
2
36
66a
105
26
69a
37
69
3a
69
65
4
45
64
49
65
4
45
49
65
4a
45
64a
47a
49
65
5a
45
64c
122
66
67
85
121
84
84c
84b
TM019160

CHK 4

Metal terminal box

Pos.	Models	All
	Kit No	***405179***
	Description	
164a	Terminal box with gasket	1
164	Terminal box cover with gasket	1
166	Screw	4
175	Screw	4
176	Terminal complete	1

Shaft seal

Pos.	Kit No	*435031*	*445068*
	Description	**CVBV**	**AUUV**
37	Gasket	1	1
62	Stop ring	1	1
105	Shaft seal	1	1

Wear parts

Pos.	Pump type		CHK 4-50/5-1
		CHK 4-20/2-1	CHK 4-60/6-1
		CHK 4-30/3-1	CHK 4-70/6-1
		CHK 4-40/4-1	CHK 4-80/6-1
	Kit No	***445057***	***445058***
	Description		
4a	Bearing chamber	-	1
36	Nut	3	3
37	Gasket	1	1
47a	Bearing ring	-	1
62	Stop ring	1	1
66	Washer	1	1
66a	Washer	3	3
67	Lock nut	1	1
69a	Spacing pipe 10 mm	1	1
122	Priming screw	1	1

CHK 4

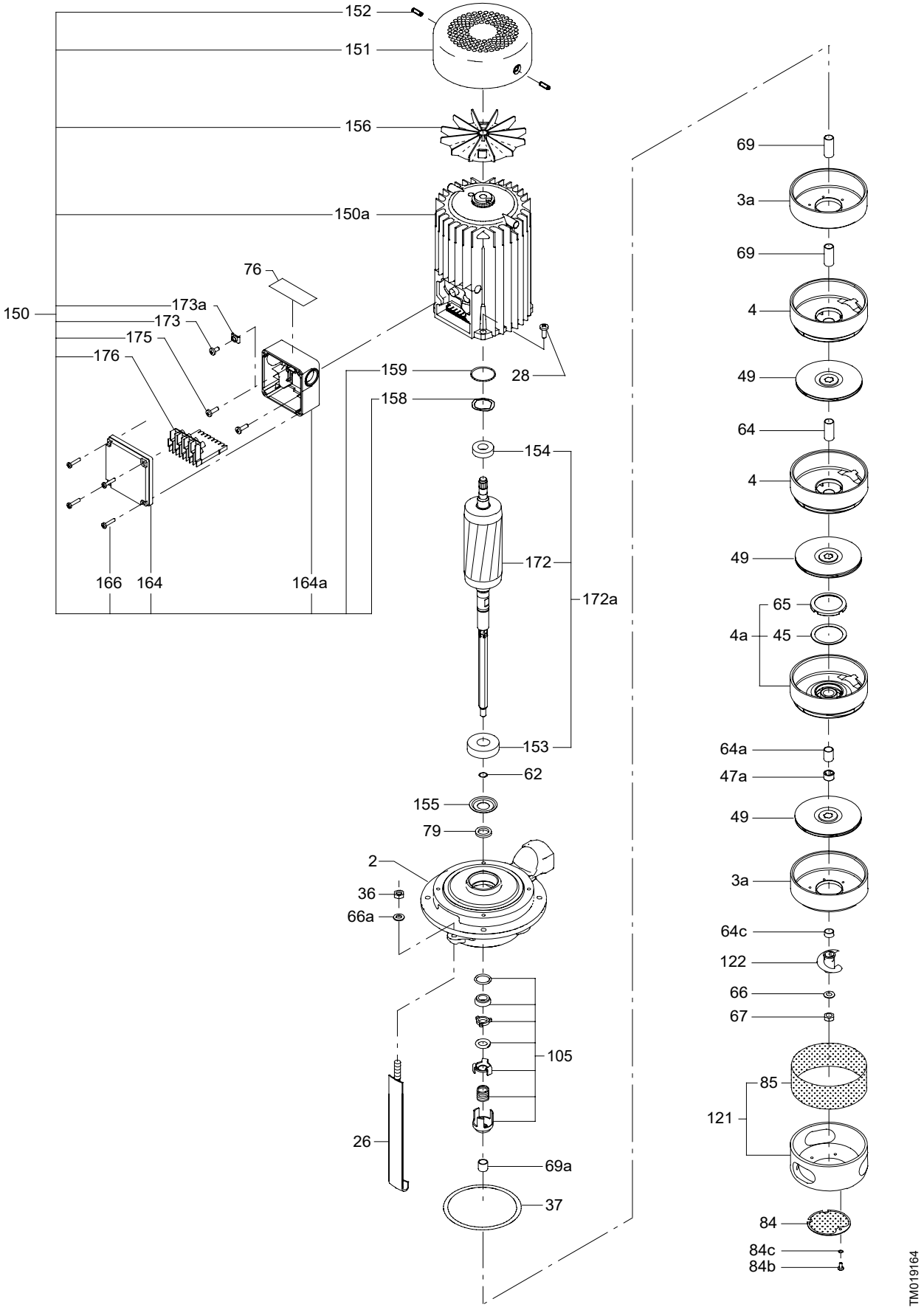
152
151
156
150a
76
150
173a
173
175
176
159
28
158
154
172
172a
153
62
155
79
2
36
66a
105
26
69a
37
166
164
164a
69
3a
69
4
49
64
4
49
65
4a
45
64a
47a
49
3a
64c
122
66
67
85
121
84
84c
84b
TM019164

CHV 2

50/60 Hz

Shaft seal

Pos.	Pump type	All models				
	Kit No	***985164***	***985848***	***985737***	***985751***	***96586305***
	Description	**CVBE/V**	**AUUE/V**	**RUUE/V**	**CVUE/V**	**AQQE/V**
37	Gasket	11	11	11	11	11
62	Stop ring	1	1	1	1	1
67	Lock nut	1	1	1	1	1
105	Shaft seal	1	1	1	1	1

Wear parts

Pos.	Pump type	CHV 2-40 CHV 2-50	CHV 2-60 CHV 2-80 CHV 2-100
	Kit No	***435015***	***435014***
	Description		
4a	Chamber	-	1
37	Gasket	6	11
45	Neck ring	5	10
47a	Bearing ring	-	1
64c	Clamp	1	1
65	Neck ring retainer	5	10
67	Lock nut	1	1
79	Diverting disc	1	1
105	Shaft seal	1	1
	Clamp	1	1

CHV 2

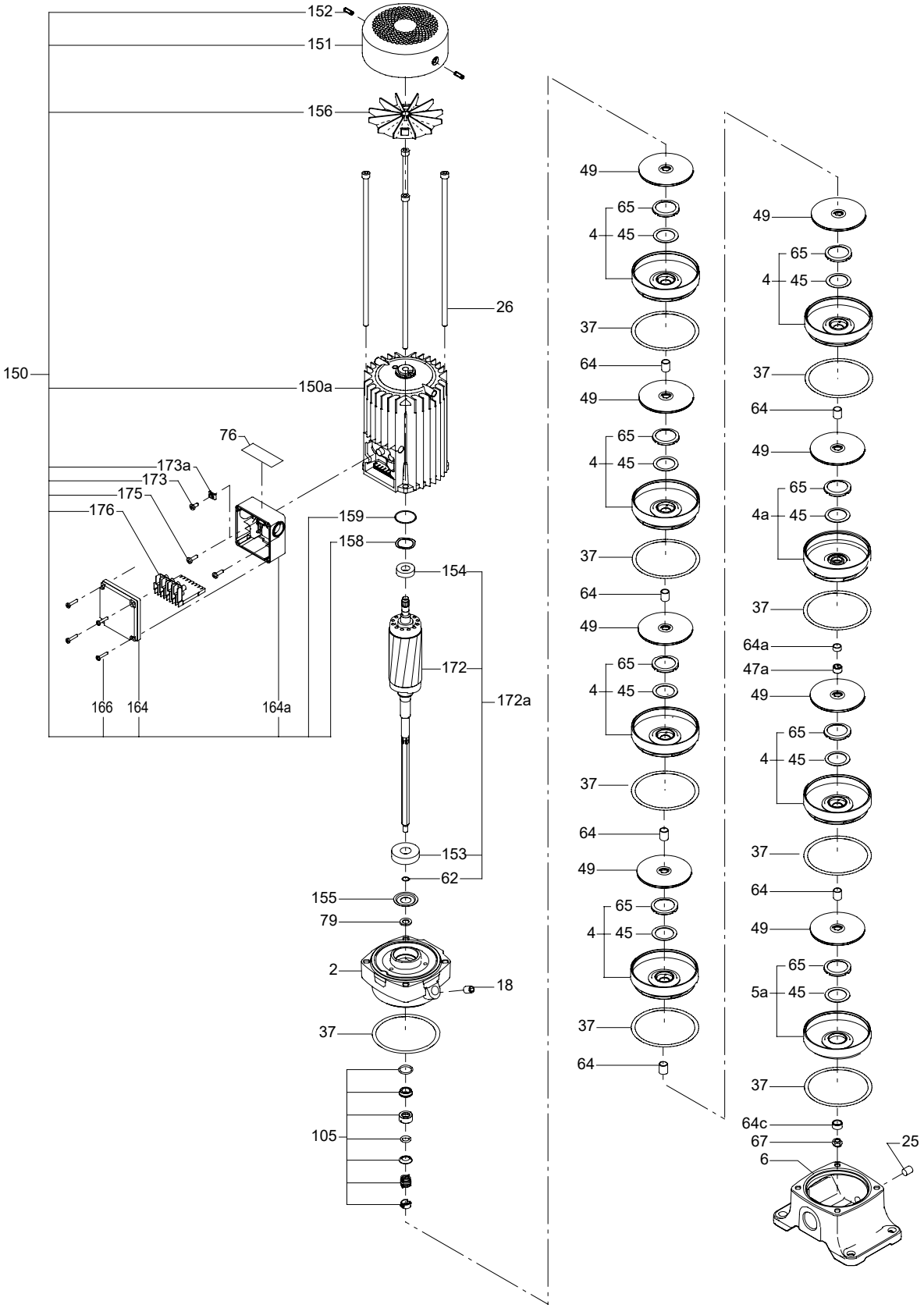
152
151
156
26
150
150a
76
173a
173
175
176
159
158
154
172
172a
166
164
164a
153
62
155
79
2
18
37
105
49
65
4
45
37
64
49
65
4
45
37
64
49
65
4
45
37
64
49
65
4
45
37
64
49
65
4
45
37
64
49
65
4a
45
37
64a
47a
49
65
4
45
37
64
49
65
5a
45
37
64c
67
6
25
TM017055

CHV 4

50/60 Hz

Chamber stack

Pos.	Pump type	CHV 4
	Pump stages	4-10
	Kit No	*96607936*
	Description	
49	Impeller complete	6
4a	Chamber with bearing, polished	1
4	Chamber complete, polished	4

Shaft seal

Pos.	Kit No	*985164*	*985848*	*985737*	*985751*	*96586305*
	Description	CVBE/V	AUUE/V	RUUE/V	CVUE/V	AQQE/V
37	Gasket	11	11	11	11	11
62	Stop ring	1	1	1	1	1
67	Lock nut	1	1	1	1	1
105	Shaft seal	1	1	1	1	1

Wear parts

Pos.	Kit No	*445067*
	Description	
4a	Chamber	1
37	Gasket	11
47a	Bearing ring	1
64c	Clamp	1
67	Lock nut	1
79	Diverting disc	1
105	Shaft seal	1

CHV 4

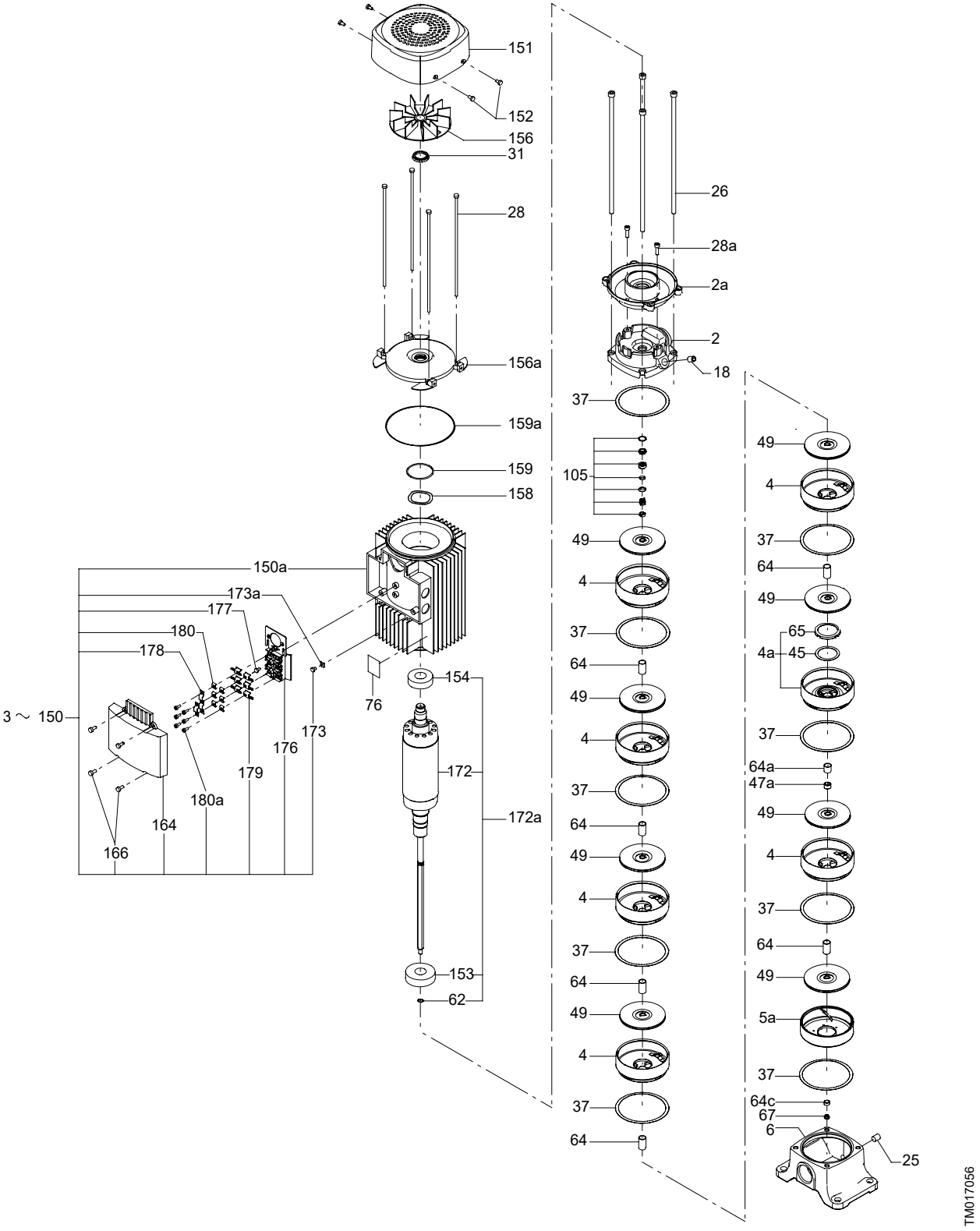
151
152
156
31
28
156a
159a
159
158
150a
173a
177
180
178
3 ~ 150
166
164
180a
179
176
173
76
154
172
172a
153
62
26
28a
2a
2
18
37
105
49
4
64
65
4a
45
64a
47a
5a
64c
67
6
25
TM017056

9. CLM, CDM, CLP

CLM, CDM, CLP

50/60 Hz, Models A, B

Shaft seal, model A

Pos.					
	CLM	**100, 125**	**150, 200**	**100, 125**	**150, 200**
	CDM	**125, 150**	**200, 210**	**125, 150**	**200, 210**
	CLP	**65, 80 min. 11 kW**	**100**	**65, 80 min. 11 kW**	**100**
	Kit No	***S0608156***	***S0608158***	***96479822***	***96479823***
	Shaft diameter [mm]	**32**	**45**	**32**	**45**
	Description	**BAQE**	**BAQE**	**BQQE**	**BQQE**
11	Parallel key	1	1	1	1
72a	O-ring	1	1	1	1
105	Shaft seal	1	1	1	1
109	O-ring	1	1	1	1
113	Pin	1	1	1	1
-	Oval flange	1	1	1	1
-	O-ring, oval flange	1	1	1	1
-	Distance piece	-	1	-	1

Shaft seal, model B

Pos.							
	CLM	**100, 125**	**150, 200**	**100, 125**	**150, 200**	**100, 125**	**150, 200**
	CDM	**125, 150**	**200, 210**	**125, 150**	**200, 210**	**125, 150**	**200, 210**
	Kit No	***S0810108***	***S0810109***	***96432382***	***96432381***	***96432384***	***96432383***
	Shaft diameter [mm]	**33**	**45**	**33**	**45**	**33**	**45**
	Description	**BBUE**	**BBUE**	**BQQE**	**BQQE**	**GQQE**	**GQQE**
11	Parallel key	1	1	1	1	1	1
72a	O-ring	1	1	1	1	1	1
109	O-ring	1	1	1	1	1	1
105	Shaft seal	1	1	1	1	1	1
113	Pin	1	1	1	1	1	1
-	O-ring, oval flange	1	1	1	1	1	1

Shaft seal, G version

Pos.				
	CLM model B	**125, 150 max. 7.5 kW**	**100, 125 min. 11 kW**	**150, 200 min. 11 kW**
	CLP	**65, 80 max. 7.5 kW**	**65, 80 min. 11 kW**	**100**
	Kit No	***96549145***	***S0524441***	***96549147***
	Shaft diameter [mm]	**25**	**32**	**45**
	Description	**DAQE**	**DAQE**	**DAQE**
105	Shaft seal	1	1	1

CLM

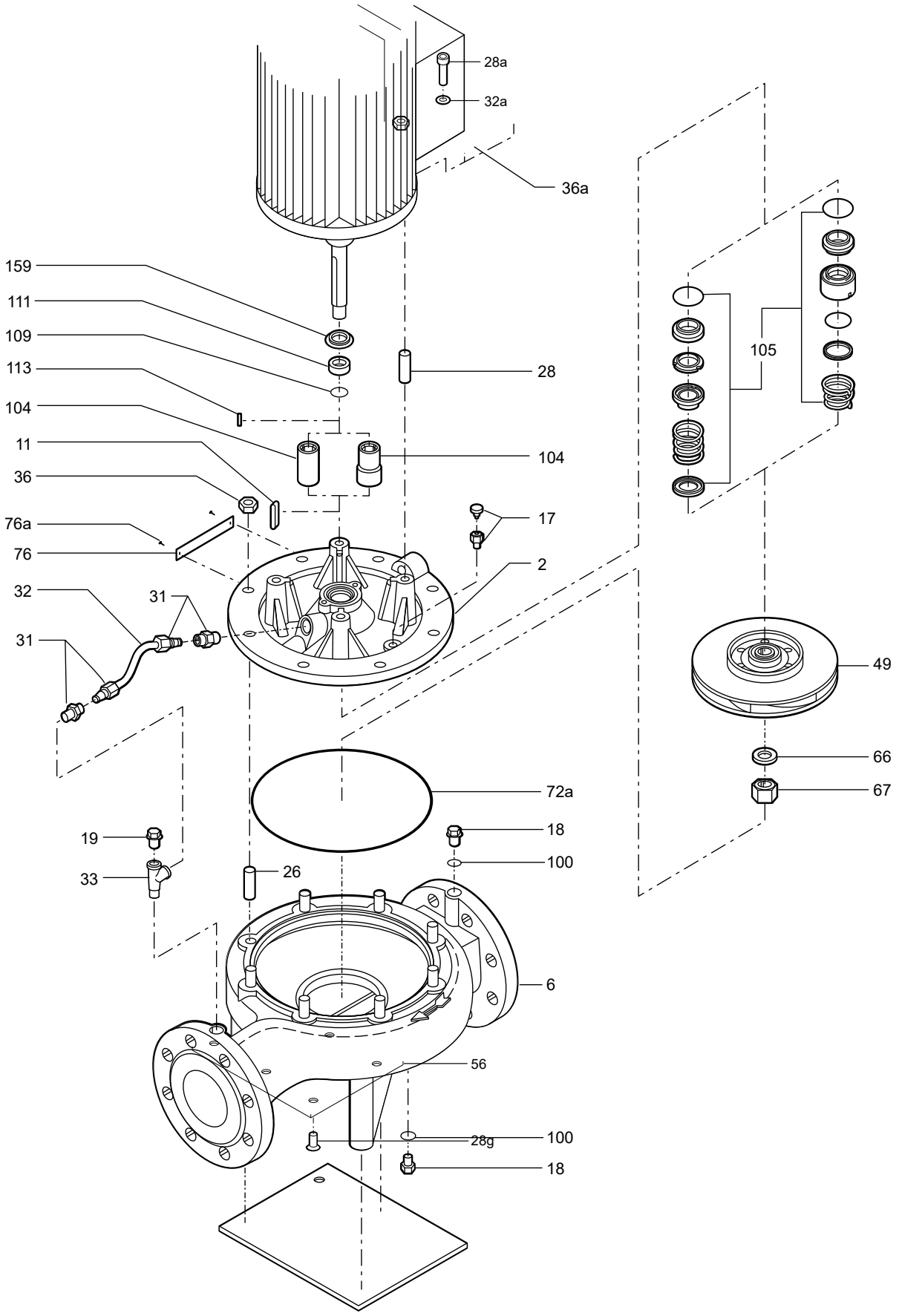
28a
32a
36a
159
111
109
113
104
11
36
76a
76
32
31
31
28
104
17
2
105
49
66
67
72a
19
33
18
100
26
6
56
28g
100
18
TM032546

CDM

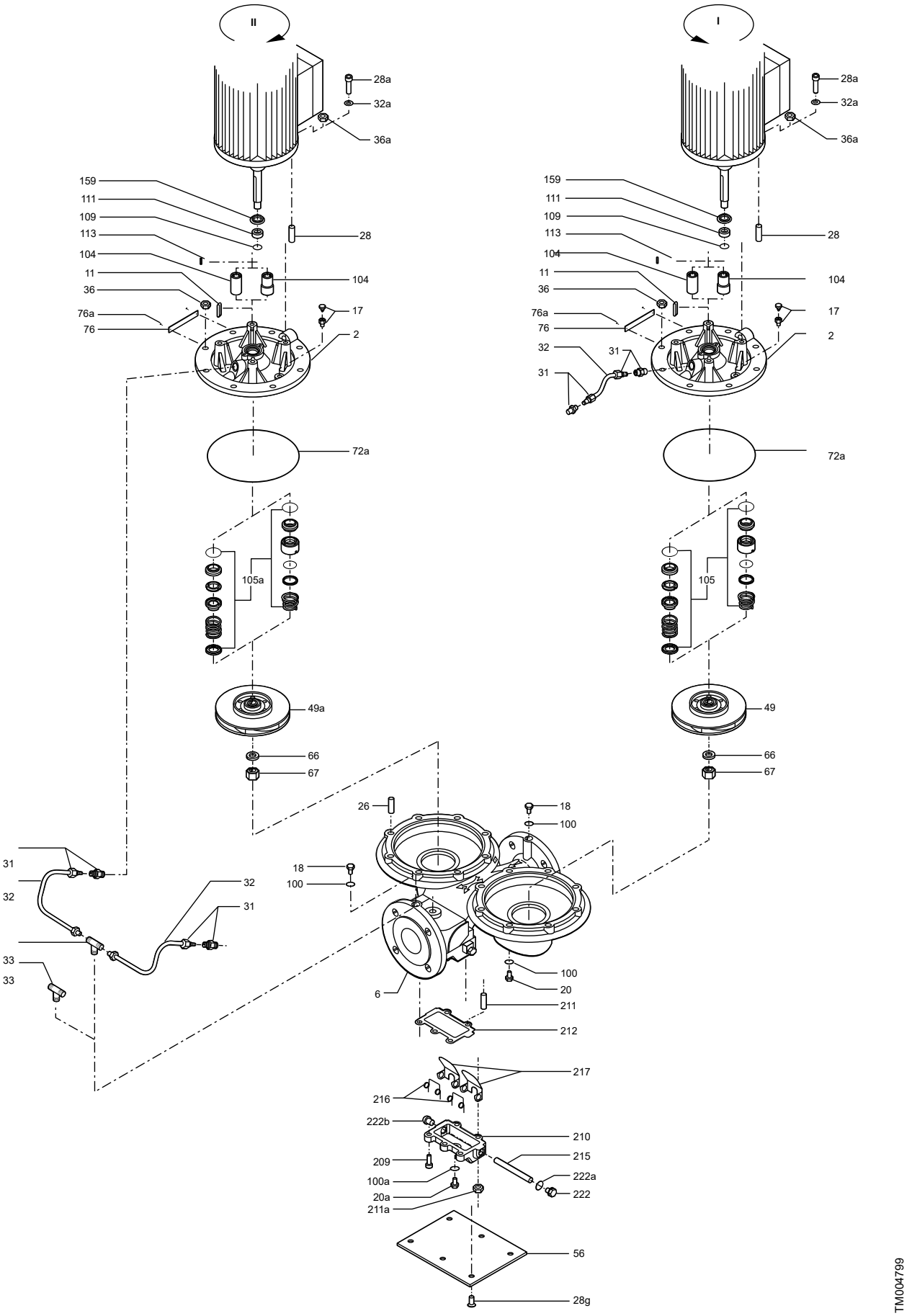
II
I
28a
32a
36a
159
111
109
113
104
11
36
76a
76
28
104
17
2
32
31
72a
105a
105
49a
49
66
67
26
18
100
6
20
211
212
217
216
222b
210
209
215
100a
222a
20a
222
211a
56
28g
TM004799

10. CM, CME and Boosters

CM, CME

50/60 Hz

Drain plug, CM

Pos.	Kit No		96932395	96932396
	Description	Material	E/V	K
25	Drain plug	-	2	2
11	O-ring for plug	EPDM	2	-
		FKM	2	-
		FFKM	-	2

Motor bearing

Pos.	Motor type	MG(E)71/80	MG(E)90	MG(E)100	MG(E)112	MG(E)132
	Kit No	96932399	96932400	96932412	96932413	96932414
	Description	All	All	All	All	All
151a	Installation indicator	1	1	1	1	1
158	Corrugated spring	1	1	1	1	1
159	O-ring (NBR)	1	1	1	1	1
153	Ball bearing	1	1	1	1	1
154	Ball bearing	1	1	1	1	1
158a	O-ring	1	1	1	1	1
155	Bearing cover plate	1	1	1	1	1
79	Diverting disc	1	1	1	1	1
159a	Gasket	1	1	1	1	2

Neck ring

Pos.	Pump type	CM1/3/5	CM1/3/5 Cold	CM10/15/25	CM10/15/25 Cold
	Kit No	96932397	96932447	96932398	96932448
	Description	All	All	All	All
45	Neck ring	14	14	8	8
65	Neck ring retainer	14	14	8	8

CM 1, 3, 5

Stainless steel

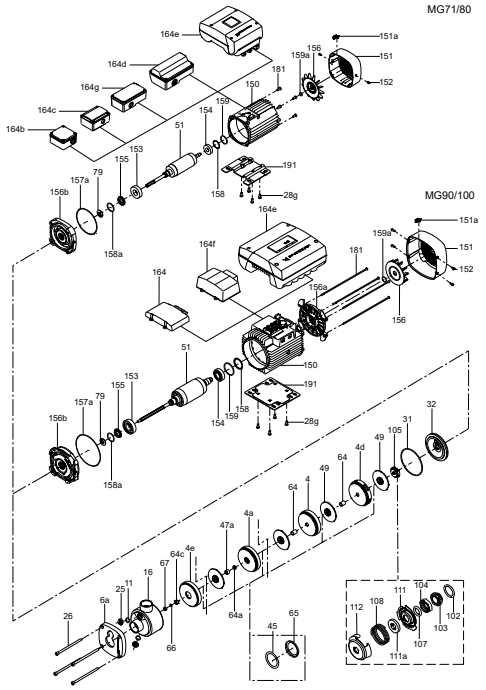

TM043588

Cast iron

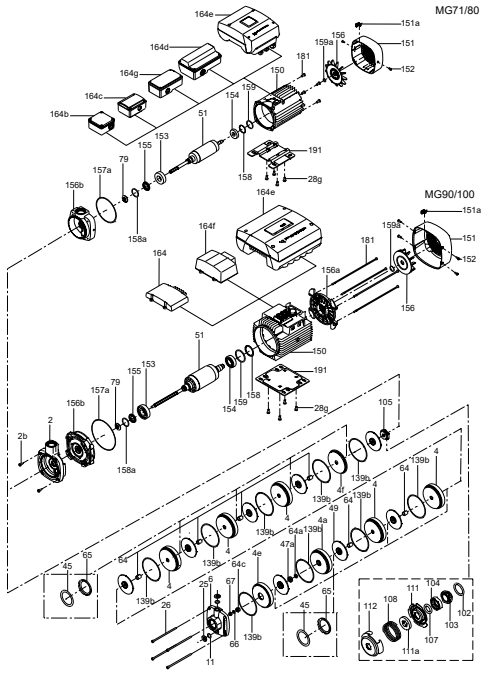

TM043591

CM 10, 15, 25

Stainless steel

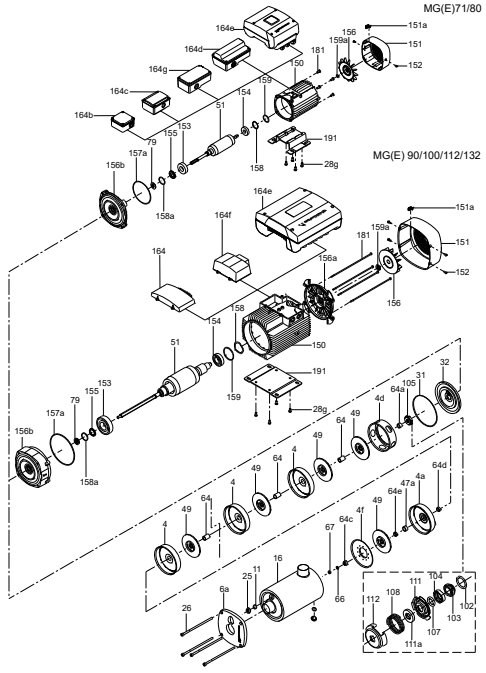

TM043828

Cast iron

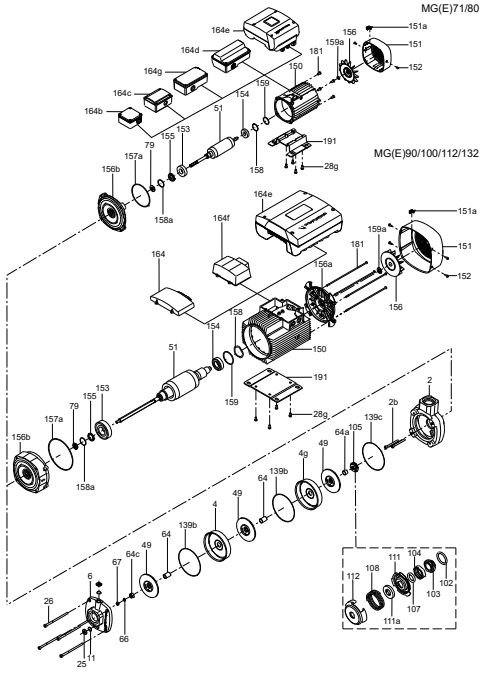

TM043829

Seal kit (A version)

Pos.		Pump type		CM1/3/5				
		Kit No		96932350	96932392	988219372	98821938	98092347
		Description	Material	AVBE/V	AQQE/V	AUQE/V	AQBE/V	AQBE
105	102	O-ring	EPDM	1	1	1	1	1
			FKM	1	1	1	1	-
	103	Stationary seal ring	SIC	-	1	1	-	-
			Carbon	1	-	-	1	1
	104	Rotating seal ring	SIC	-	1	-	1	1
			Al2O3	1	-	1	-	-
	107	O-ring	EPDM	1	1	1	1	1
			FKM	1	1	1	1	-
	111	Seal ring retainer	-	1	1	1	1	1
	108	Spring	-	1	1	1	1	1
	111a	Stop ring	-	1	1	1	1	1
	112	Seal driver	-	1	1	1	1	1
139b		Gasket	-	10	10	10	10	5
139c		Gasket ∅144.5/D137.5 x 0.5	-	-	-	-	-	-
64c		Clamp	-	1	1	1	1	1
66		Lock washer (Nord-lock)	-	1	1	1	1	1
67		Nut	-	1	1	1	1	1

Pos.		Pump type		CM10/15/25			
		Kit No		96932393	96932394	98821932	98821933
		Description	Material	AVBE/V	AQQE/V	AUQE/V	AQBE/V
105	102	O-ring	EPDM	1	1	1	1
			FKM	1	1	1	-
	103	Stationary seal ring	SIC	-	1	1	-
			Carbon	1	-	-	1
	104	Rotating seal ring	SIC	-	1	-	1
			Al2O3	1	-	1	-
	107	O-ring	EPDM	1	1	1	1
			FKM	1	1	1	-
	111	Seal ring retainer	-	1	1	1	1
	108	Spring	-	1	1	1	1
	111a	Stop ring	-	1	1	1	1
	112	Seal driver	-	1	1	1	1
139b		Gasket	-	6	6	10	5
139c		Gasket ∅144.5/D137.5 x 0.5	-	1	1	-	-
64c		Clamp	-	1	1	1	1
66		Lock washer (Nord-lock)	-	1	1	1	1
67		Nut	-	1	1	1	1

CM 1, 3, 5

Stainless steel

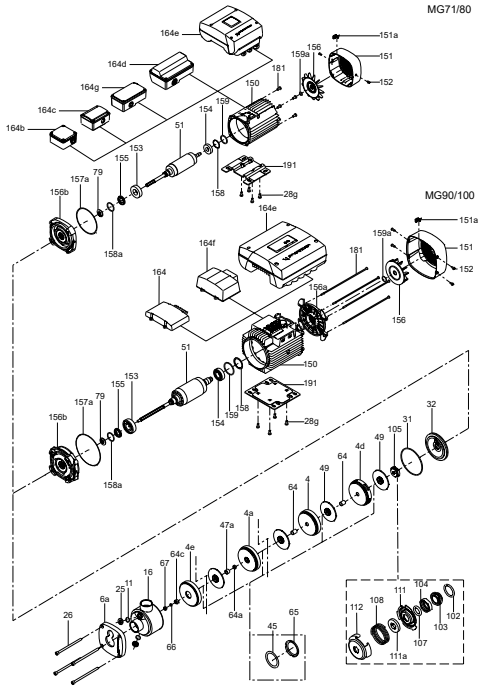

TM043588

Cast iron

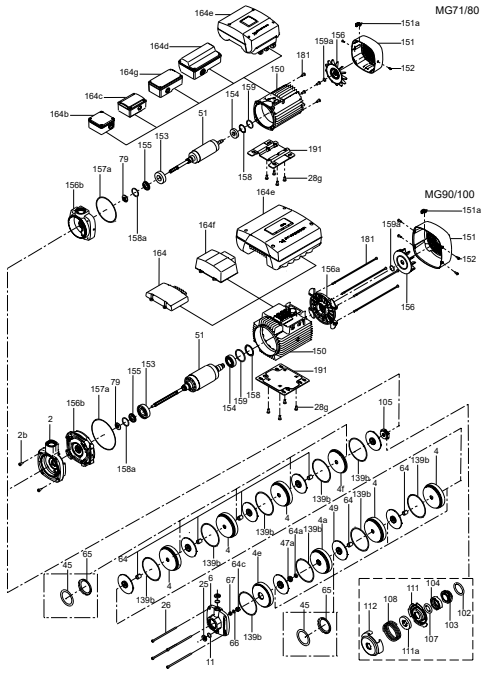

TM043591

CM 10, 15, 25

Stainless steel

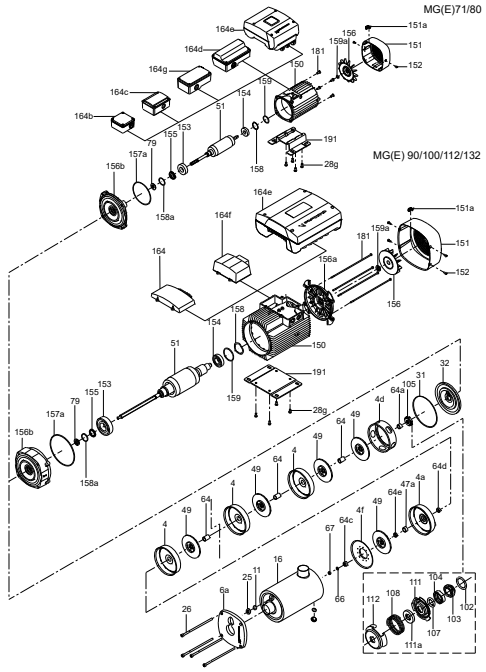

TM043828

Cast iron

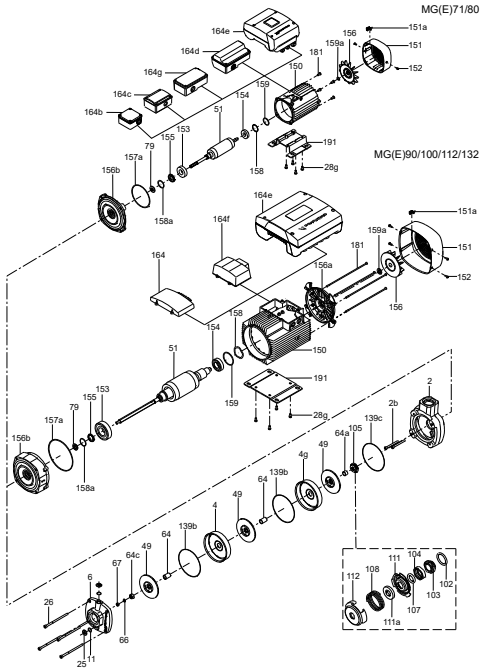

TM043829

Seal kit (I and G version)

Pos.		Pump type		CM1/3/5					
		Kit No		*96932438*	*96932440*	*96932441*	*98810275*	*98806252*	*98463764*
		Description	Material	AVBE/V	AQQE/V	AQQK	AQBE/V	AUQE/V	AQQK/E/V
105	102	O-ring	EPDM	1	1	-	1	1	-
			FKM	1	1	-	1	1	-
			FFKM	-	-	1	-	-	1
	103	Stationary seal ring	SIC	-	1	1	-	1	1
			Carbon	1	-	-	1	-	-
	104	Rotating seal ring	SIC	-	1	1	1	-	1
			Al2O3	1	-	-	-	1	-
	107	O-ring	EPDM	1	1	-	1	1	-
			FKM	1	1	-	1	1	-
			FFKM	-	-	1	-	-	1
	111	Seal ring retainer	-	1	1	1	1	1	1
	108	Spring	-	1	1	1	1	1	1
	111a	Stop ring	-	1	1	1	1	1	1
	112	Seal driver	-	1	1	1	1	1	1
31		O-ring	EPDM	1	1	-	1	1	1
			FKM	1	1	-	1	1	1
			FFKM	-	-	1	-	-	-
64c		Clamp	-	1	1	1	1	1	1
66		Lock washer (Nord-lock)	-	1	1	1	1	1	1
67		Nut	-	1	1	1	1	1	1

Pos.		Pump type		CM10/15/25					
		Kit No		*96932443*	*96932445*	*96932446*	*98821912*	*98821920*	*98463766*
		Description	Material	AVBE/V	AQQE/V	AQQK	AQBE/V	AUQE/V	AQQK/E/V
105	102	O-ring	EPDM	1	1	-	1	1	-
			FKM	1	1	-	1	1	-
			FFKM	-	-	1	-	-	1
	103	Stationary seal ring	SIC	-	1	1	-	1	1
			Carbon	1	-	-	1	-	-
	104	Rotating seal ring	SIC	-	1	1	1	-	1
			Al2O3	1	-	-	-	1	-
	107	O-ring	EPDM	1	1	-	1	1	-
			FKM	1	1	-	1	1	-
			FFKM	-	-	1	-	-	1
	111	Seal ring retainer	-	1	1	1	1	1	1
	108	Spring	-	1	1	1	1	1	1
	111a	Stop ring	-	1	1	1	1	1	1
	112	Seal driver	-	1	1	1	1	1	1
31		O-ring	EPDM	1	1	-	1	1	1
			FKM	1	1	-	1	1	1
			FFKM	-	-	1	-	-	-
64c		Clamp	-	1	1	1	1	1	1
66		Lock washer (Nord-lock)	-	1	1	1	1	1	1
67		Nut	-	1	1	1	1	1	1

CM 1, 3, 5

Stainless steel

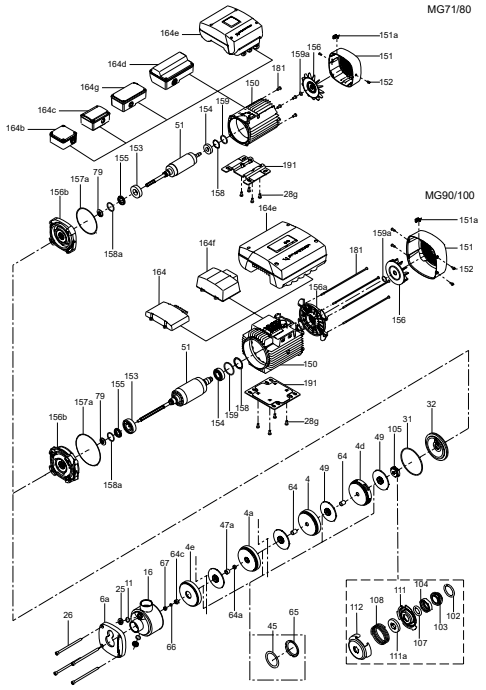

TM043588

Cast iron

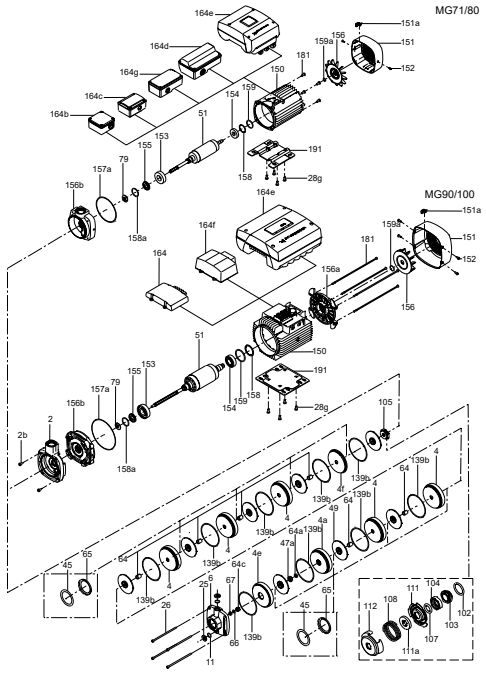

TM043591

CM 10, 15, 25

Stainless steel

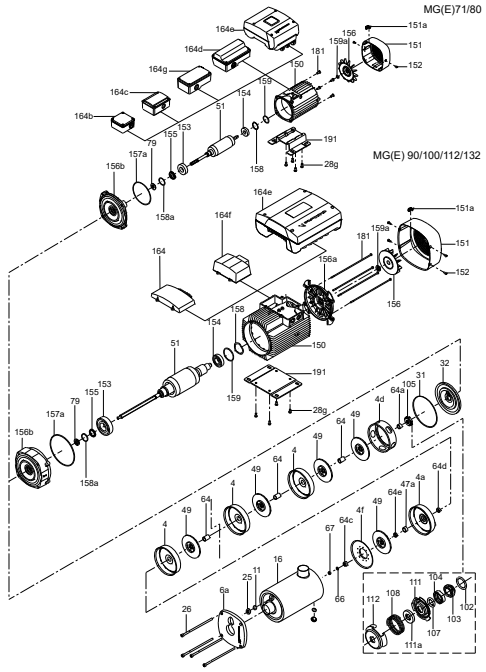

TM043828

Cast iron

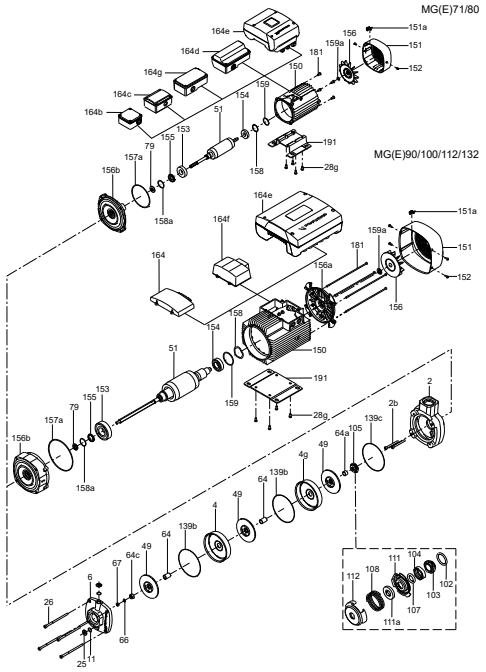

TM043829

CM Self priming

50/60 Hz

Spares

Pos.	Description	Kit No
4d	Spare, Air seperator chamber	*98520101*
4f	Spare, Empty chamber 27mm	*98520102*
4f	Spare, Empty chamber 18mm	*98520103*
64a	Spare, Spacing pipe 13mm	*98520104*

Spare sleeves

Pos.	Description	Kit No	Model / Version / Qty
16	Sleeve CM1/3-7 Rp thread	*98470942*	CM-SP 1/3/5-3/4
	Sleeve CM1/3-9 Rp thread	*98470943*	CM-SP 1/3/5-5/6
	Sleeve CM1/3-11 Rp thread	*98470949*	CM-SP 5-7

Valve kit

Pos.	Kit No	*98519018*	*98519013*
	Description	**4 meters**	**8 meters**
4e 5d 5e	Chamber cpl. w. valve	1	1
64f 64g	Container with rubber seal	1	1
5b	Water trap	1	1
5c	O-ring EPDM 37.0 x 2.62	1	1

CM Self priming

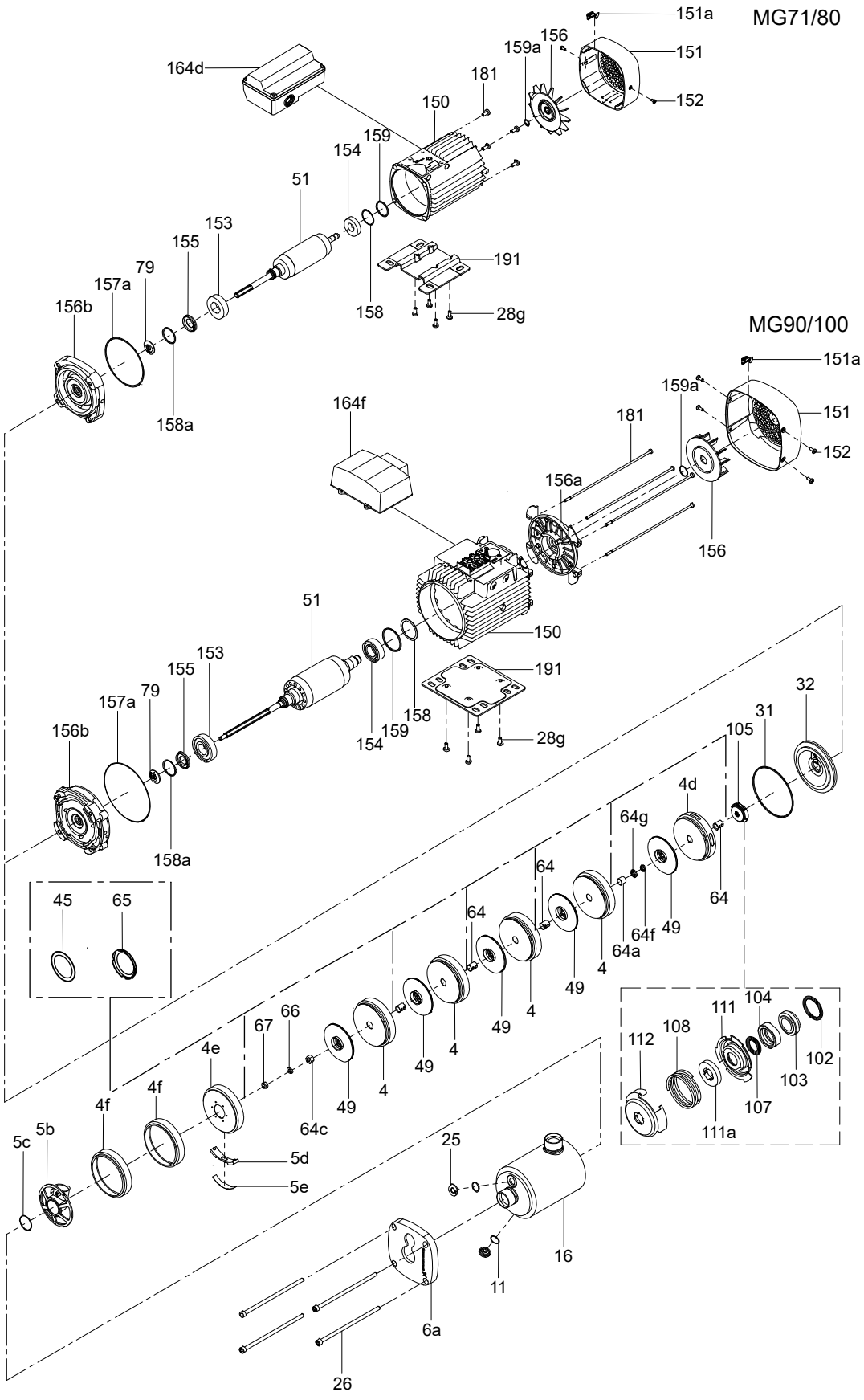

TM058836

CME Booster

50/60 Hz

Manometer

Pos.	Kit No	*98906914*	*98906915*
	Manometer thread	**Rp**	**NPT**
462	Manometer 0-16 bar	1	-
462	Manometer 0-200 PSI	-	1

Non return valve (RP and NPT)

Pos.	Kit No	*98906916*	*98906917*
	Valve size	**1"**	**1 1/2"**
405a	Gate	1	1
405b	Spring material	1	1
405c	O-ring	1	1
405d	Washer	-	1

Pressure tank

Pos.	Kit No	*98906908*	*98906909*
	Tank thread	**Rp**	**NPT**
305	2 liter GT-H tank with Rp thread	1	-
305	2 liter GT-H tank with NPT thread	-	1

Sensor kit

Pos.	Kit No	*98906904*	*98906905*
	Sensor thread	**Rp**	**NPT**
461a	Sensor MBS 1900 0-10 bar	1	1

German version with inlet pressure switch

Inlet pressure switch

Pos.	Kit No	*99010690*
	External thread	**Rp**
407	Inlet pressure switch	1

Manometer

Pos.	Kit No	*99010691*
	Manometer thread	**Rp**
462	Manometer	1

Sensor kit

Pos.	Kit No	*99010689*
	Sensor thread	**Rp**
461a	Sensor	1

CME Booster

CMBE German version with pressure switch

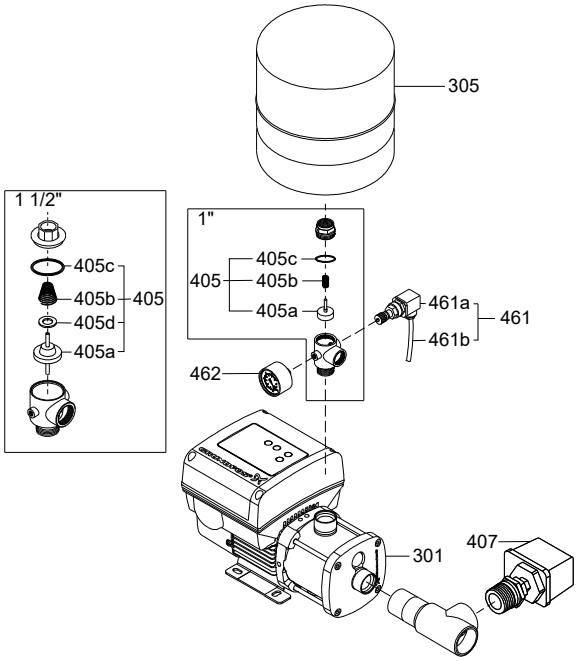

TM065177

CMBE

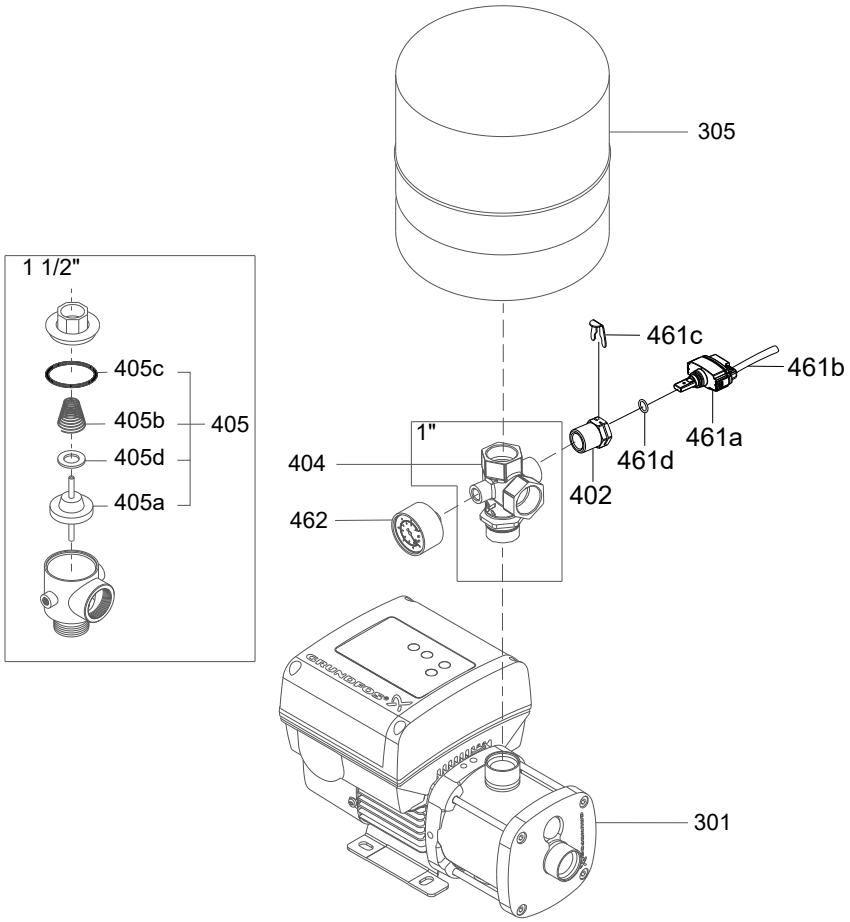

TM064097

CM Booster PT, PS

50/60 Hz

Hose, kits

Pos.	Kit No	98906918	98906919
	Model	CMB PT	CMB PT
	Tanks size	24 liter	60 liter
309	Rubber hose with fittings	1	-
309	Rubber hose with fittings	-	1
406	Gasket	1	1

Manometer

Pos.	Kit No	98906913
	Model	CMB PT / CMB PS
462	Manometer	1

Non return valve CMB PS & CMB PT vertical tank

Pos.	Kit No	98906916	98906917
	Model	CMB PS/PT	CMB PS
	Valve size	1"	1 1/2"
405a	Gate	1	1
405b	Spring	1	1
405c	O-ring	1	1
406	Gasket	1	-
405d	Washer	-	1

Pressure switch kit

Pos.	Kit No	98906906	98906907
	Model	CMB PS	CMB PT
407a	Pressure switch	1	1

Pressure tank

Pos.	Kit No	98906910	98906911	98906912
	Model	CMB PT	CMB PT	CMB PT
305	24 liter GT-H tank	1	-	-
305	60 liter GT-H tank	-	1	-
305	18 liter GT-H tank	-	-	1
406	Gasket	2	2	2

CMB PM1, CMB PM2

See section Pressure manager for PM parts.

CM Booster

CMB PS

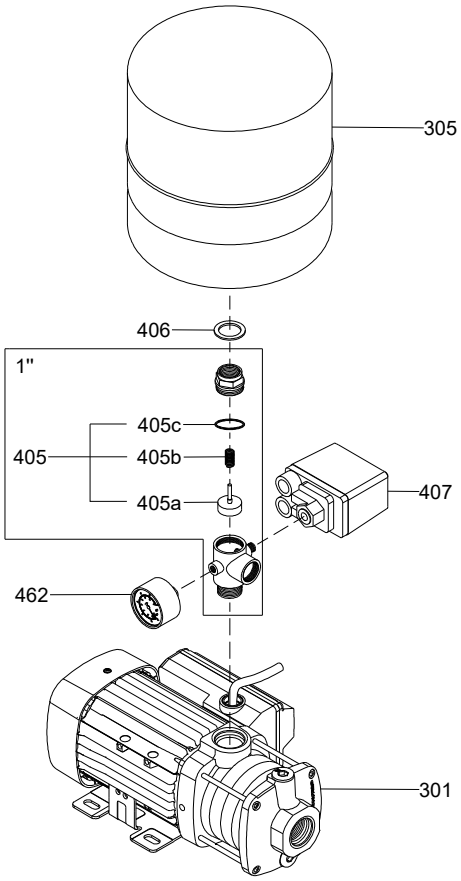

TM063604

CMB PT (vertical tank)

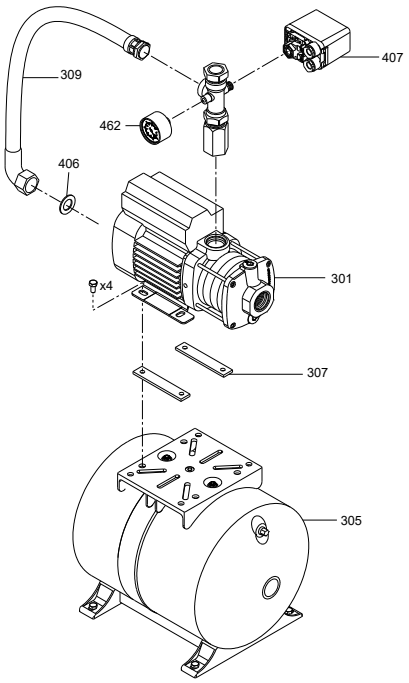

TM064098

CMB PT (Horizontal tank)

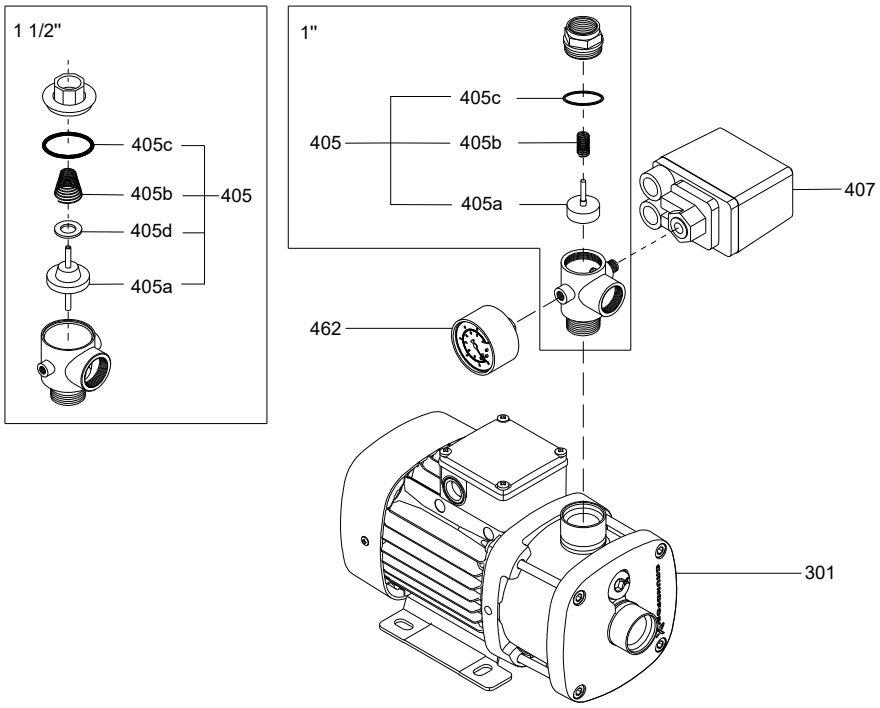

11. CMV

50/60 Hz

Drain plug, CMV

Pos.	Kit No		96932395
	Description	Material	E/V
25	Drain plug	-	2
11	O-ring for plug	EPDM	2
		FKM	2
		FFKM	-

Motor bearing

Pos.	Motor type	MG(E)71/80	MG(E)90
	Kit No	96932399	96932400
	Description	All	All
151a	Installation indicator	1	1
158	Corrugated spring	1	1
159	O-ring (NBR)	1	1
153	Ball bearing	1	1
154	Ball bearing	1	1
158a	O-ring	1	1
155	Bearing cover plate	1	1
79	Diverting disc	1	1
159a	Gasket	1	1

Neck ring

Pos.	Pump type	CMV 3/5	CMV 3/5 Cold
	Kit No	96932397	96932447
	Description	All	All
45	Neck ring	14	14
65	Neck ring retainer	14	14

Seal kit (A version)

Pos.		Pump type		CMV 3/5			
		Kit No		98066890	98072201	98072202	98072203
		Description	Material	AVBE	AVBV	AQQE	AQQV
105	102	O-ring	EPDM	1	-	1	-
			FKM	-	1	-	1
	103	Stationary seal ring	SIC	-	-	1	1
			Carbon	1	1	-	-
	104	Rotating seal ring	SIC	-	-	1	1
			Al2O3	1	1	-	-
	107	O-ring	EPDM	1	-	1	-
			FKM	-	1	-	1
	111	Seal ring retainer	AISI316	1	1	1	1
	108	Spring	AISI316	1	1	1	1
	111a	Stop ring	1 4460	1	1	1	1
	112	Seal driver	AISI316	1	1	1	1
139b		Gasket	Aramides fibres	7	7	7	7
158b		O-ring	EPDM	4	-	4	-
			FKM	-	4	-	4
64c		Clamp	STX2000	1	1	1	1
66		Lock washer (Nord-lock)	AISI316	1	1	1	1
67		Nut	AISI316	1	1	1	1

CMV 3, 5

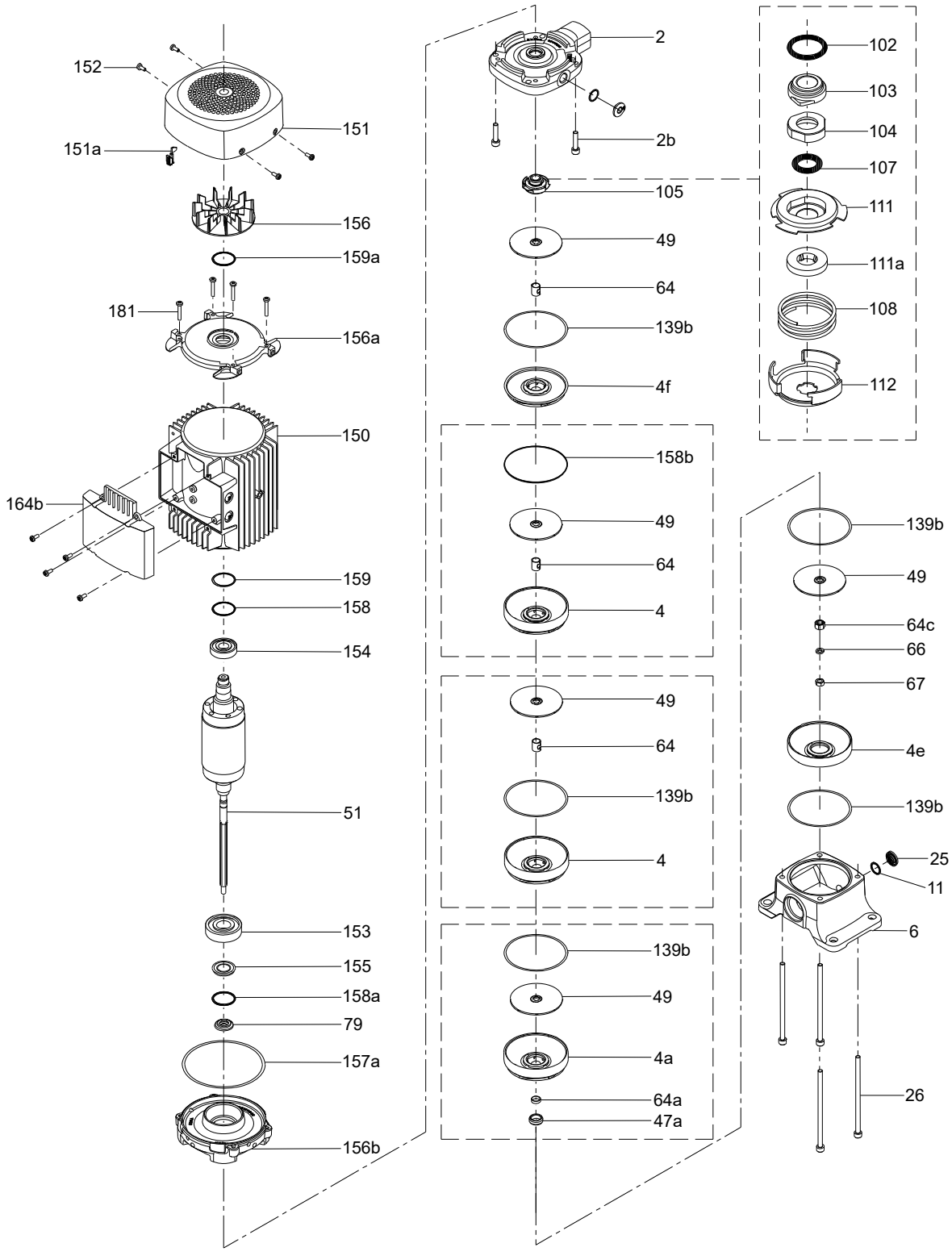

* Depending on model.

12. CP

CP 2

50/60 Hz, All models

Shaft seal

Pos.		CP 2N
	Kit No	***985140***
	Description	**Crane**
5	Chamber gaskets	2
7	Flange gasket	-
7	Flange gasket K	-
8	Guide vane	1
22	Shaft seal	1
25	Base gasket	-
39	Split cone	1
40	Cone nut	1

Wear parts

Pos.		CP 2, CP 2K	CP 2	CP 2K	CP 2N	
	Kit No	***305062***	***305063***	***305064***	***305085***	***305086***
	Number of stages	**2-7**	**10-20**	**10-20**	**2-7**	**10-20**
	Description					
4	Bearing	-	-	-	-	2
5	Chamber gasket	10	20	20	8	23
7	Flange gasket	2	2	2	-	-
10	Bottom neck ring	1	1	1	-	-
11	Bottom bearing	-	-	1	1	1
11	Bottom bearing bronze	1	1	-	-	-
25	Base gasket	1	1	1	1	1
39	Split cone	7	20	20	7	20
40	Cone nut	6	19	19	6	19

CP 2

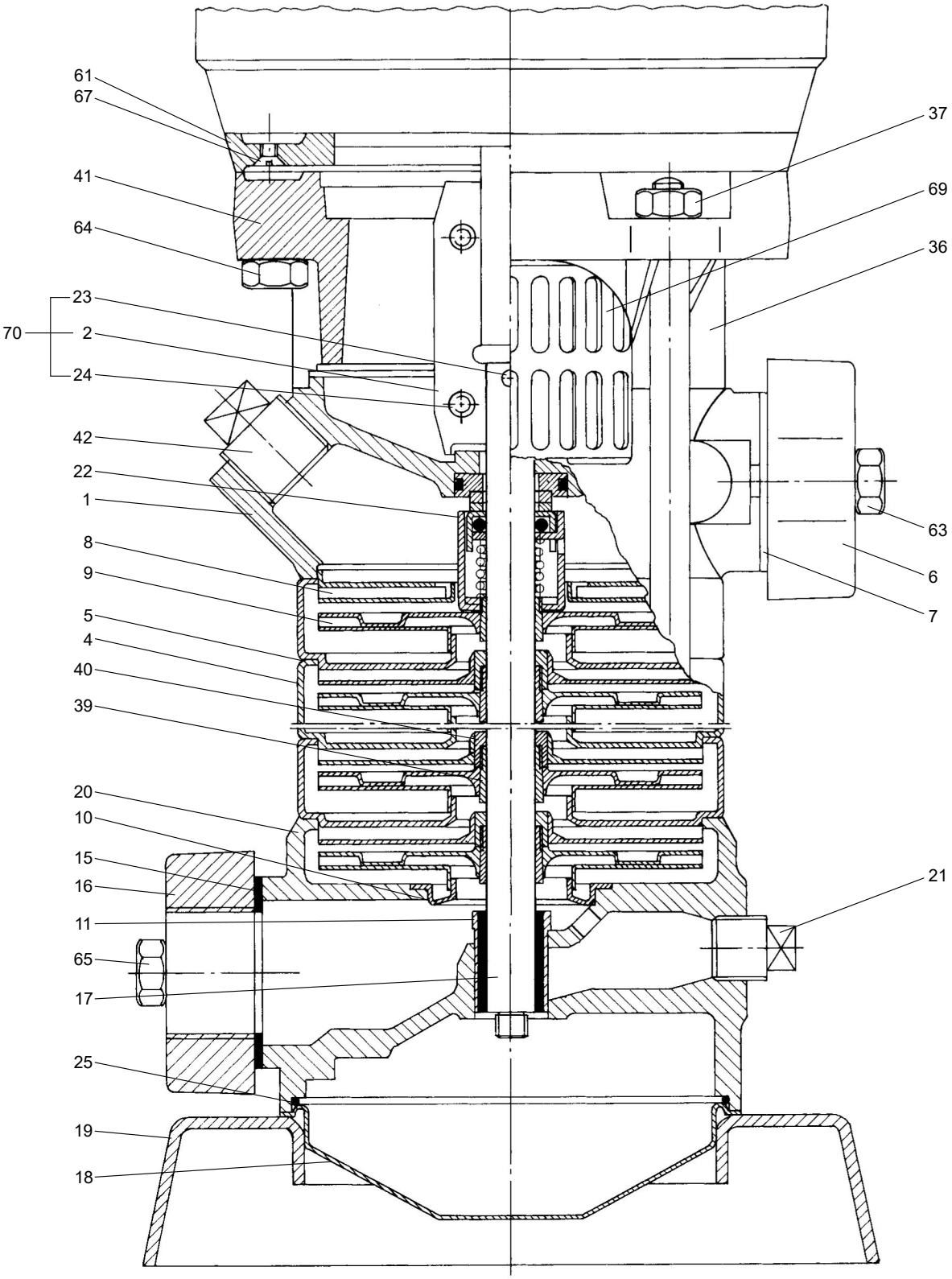
61
67
41
64
70
23
2
24
42
22
1
8
9
5
4
40
39
20
10
15
16
11
65
17
25
19
18
37
69
36
63
6
7
21
TM014268

CP 3

50/60 Hz, Model B

Shaft seal

Pos.	Pump type	GZ, GRZ				
	Kit No	*985285*	*96549650*	*96549651*	*96549652*	*96549653*
	Description		**BAQE**	**BAQV**	**BQQE**	**BQQV**
22	Shaft seal	1	1	1	1	1
28	Base gasket	-	2	2	2	2
40	Split cone nut	-	1	1	1	1
65	Chamber gaskets	-	1	1	1	1

Wear parts

Pos.	Pump type	CP 3R, cold water			CP 3KR, hot water	
	Kit No	*315413*	*315414*	*315415*	*315422*	*315423*
	Number of stages	**1-6**	**8-12**	**14-24**	**8-12**	**14-20**
	Description					
10	Rubber neck ring	6	12	24	-	-
10	Bronze neck ring	-	-	-	12	20
11	Rubber bottom bearing	1	1	-	-	-
11	Carbide bottom bearing	-	-	1	1	1
11	Bronze bottom bearing	-	-	-	-	-
28	Base gasket	1	1	1	1	1
39	Split cone	6	12	24	12	20
40	Split cone nut	5	11	23	11	19
65	Chamber gasket	5	11	23	11	19
88	Flange gasket	2	2	2	-	-
88	Flange gasket K	-	-	-	2	2
126	Spacer	1	1	1	1	1
127	Spacer	1	1	1	1	1

Coupling complete

Pos.	Kit No	*96587585*	*96587588*	*96587589*	*96587603*	*329038*
	Motor/pump shaft diameter x L [mm]	**14/16 x 63**	**19/16 x 63**	**24/16 x 68**	**28/16 x 73.5**	**38/16 x 90**
	Description					
2	Coupling half	2	2	2	2	2
24	Torx screw	4	4	4	4	4
23	Pin	1	1	1	1	1

CP 3

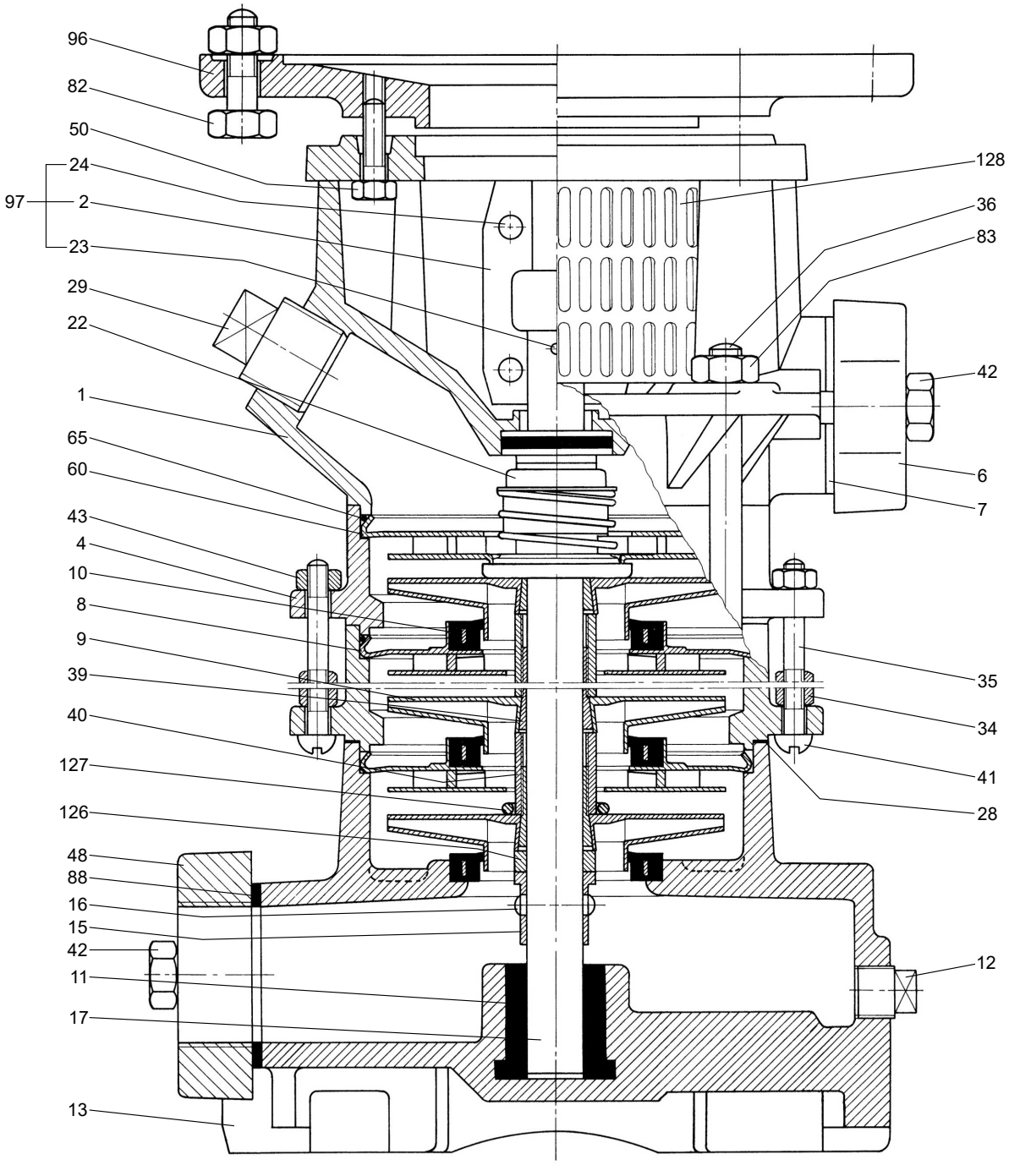
96
82
50
24
97
2
23
29
22
1
65
60
43
4
10
8
9
39
40
127
126
48
88
16
15
42
11
17
13
128
36
83
42
6
7
35
34
41
28
12
TM014269

CP 8

Coupling complete

Pos.		50/60 Hz				50 Hz	60 Hz	CP(E) 8H 50 Hz
	Kit No	*96587585*	*96587588*	*96587589*	*96587603*	*329138*	*329038*	*329128*
	Motor/pump shaft diameter x L [mm]	**14/16 x 63**	**19/16 x 63**	**24/16 x 68**	**28/16 x 73.5**	**38/16 x 90**	**38/16 x 90**	**19/16 x 77.5**
	Description							
2	Coupling half	2	2	2	2	2	2	2
24	Screw	4	4	4	4	4	4	4
23	Pin	1	1	1	1	1	1	1

Shaft seal

Pos.	**Pump type**	**CP 8GZ**				
	Kit No	*985284*	*96549654*	*96549655*	*96549656*	*96549657*
	Description		**BAQE**	**BAQV**	**BQQE**	**BQQV**
37	Paper chamber gasket	2	21	21	21	21
38	Rubber chamber gasket	2	21	21	21	21
105	Shaft seal	1	1	1	1	1

Wear parts

Pos.		CP 8, cold water		CP 8K, hot water	
	Kit No	*325250*	*325251*	*325253*	*325254*
	Number of stages	**1-10**	**12-20**	**5-10**	**12-20**
	Description				
37	Paper chamber gasket	11	21	11	21
38	Rubber chamber gasket	11	21	11	21
39	Flange gasket	2	2	-	-
40	Flange gasket K	-	-	2	2
44	Rubber bottom bearing	1	1	-	-
44	Bronze bottom bearing	-	-	-	-
44	Carbide bottom bearing		-	1	1
45	Rubber neck ring	10	20	-	-
45	Bronze neck ring	-	-	10	20
46	Top intermediate bearing	1	1	-	-
47	Rubber intermediate bearing	9	19	-	-
47	Bronze intermediate bearing	-	-	10	20

CP 8

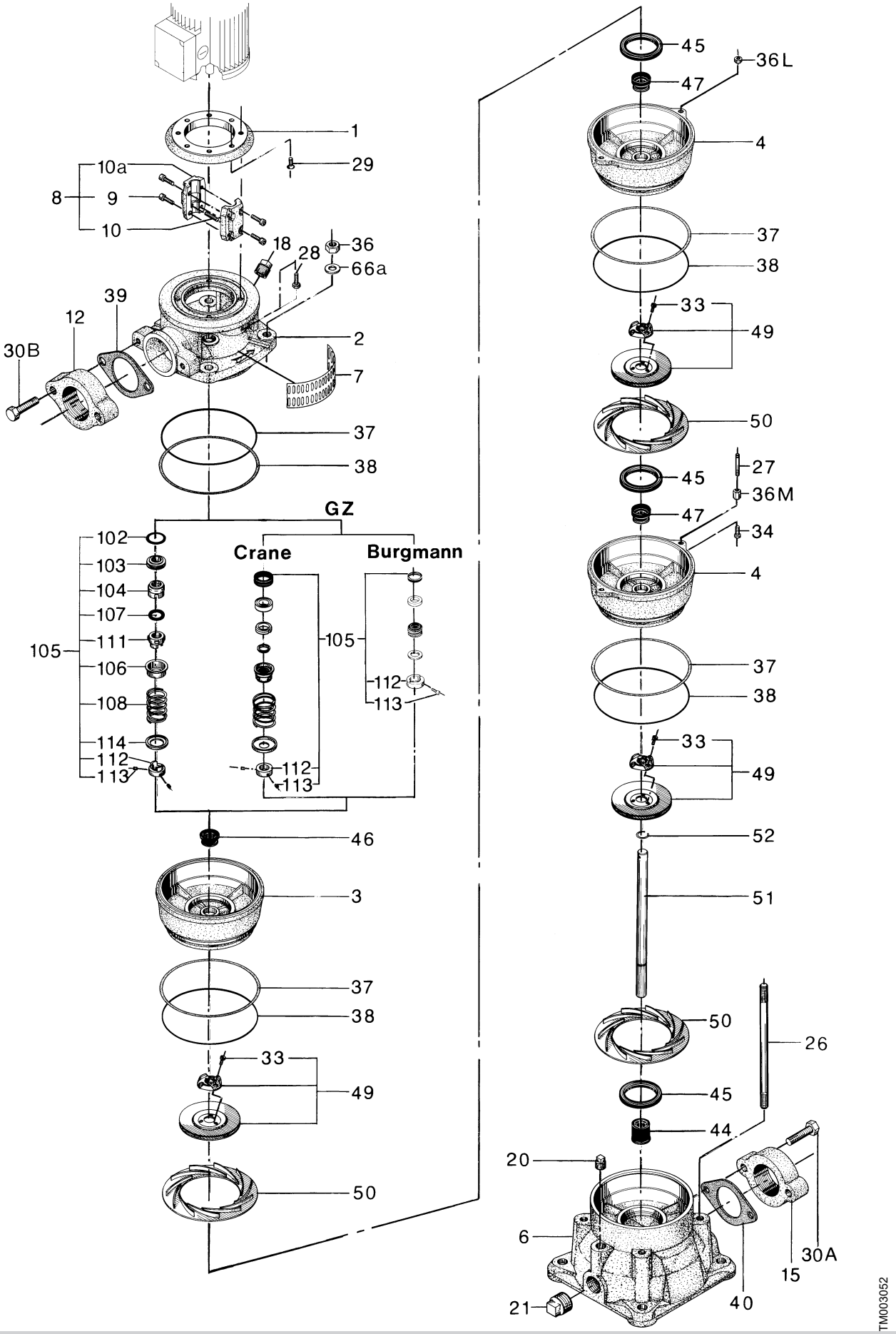
1
29
10a
8
9
10
18
28
36
66a
39
12
30B
2
7
37
38
GZ
Crane
Burgmann
102
103
104
107
111
105
106
108
114
112
113
105
112
113
112
113
46
3
37
38
33
49
50
45
36L
47
4
37
38
33
49
50
45
27
36M
47
34
4
37
38
33
49
52
51
50
26
45
44
20
6
21
40
15
30A
TM003052

13. CR

CR, CRI, CRN 1, 3

50/60 Hz

Coupling guard

Description	Kit No
MG 71 - 80	*96505130*
MG 90 - 132	*96505131*
NEMA, F 182/213 TC	*96505132*

Content

Pos.	Description	Quantity
7	Coupling guard	2
7a	Screw	4

Plug

Description	Kit No
EPDM/FKM	*96505133*
EPDM/FKM, NEMA	*96511103*

Content

Pos.	Description		Quantity
18	Air vent screw		1
23a	Pipe plug		1
23b	Pipe plug		1
25	Drain plug with bypass valve		1
38	O-ring 16.3 x 2.4	EPDM	1
		FKM	1
100	O-ring 16.3 x 2.4	EPDM	2
		FKM	2

O-ring

Description	Kit No
EPDM	*96455090*
FKM	*96455091*
FXM	*96463944*

Content

Pos.	Description	Quantity
37	O-ring137.5 x 3.3	2
38	O-ring 16.3 x 2.4	1
100	O-ring 16.3 x 2.4	2
109	O-ring 22 x 2.75	1

Shaft seal

Description	Kit No
HQQE	*96455086*
HQQV	*96455087*
HQQK	*96533326*
HQQF	*96533327*
HQBE	*96455088*
HQBV	*96455089*
HQBK	*96491375*
HUBE	*96455082*
HUBV	*96455083*
HUBK	*96533322*
HUBF	*96533323*
HUUE	*96455084*
HUUV	*96455085*
HUUV [1]	*91043611*
HUUK	*96533324*
HUUF	*96533325*

1 Silicone-free cartridge

Content

Pos.	Description	Quantity
105	Shaft seal	1

Wear parts

Pos.	Bearings	Kit No			
	Silicon carbide	***96455095***	***96455092***	***96455093***	***96455094***
	Bronze	***96455102***	***96455104***	***96455105***	***96455106***
	Carbon graphite	***96460140***	***96455110***	***96455111***	***96455112***
	Description/stages	**-9**	**-19**	**-27**	**-36**
4a	Chamber with bearing	1	2	3	4
39	Gasket	2	2	2	2
45	Neck ring	8	17	24	32
47a	Bearing ring, rotating	1	2	3	4
64a	Spacing pipe	1	2	3	4
64c	Clamp splined	1	1	1	1
65	Neck ring retainer	8	17	24	32
66	Lock washer	1	1	1	1
67	Lock nut	1	1	1	1

CR, CRI, CRN 1, 3

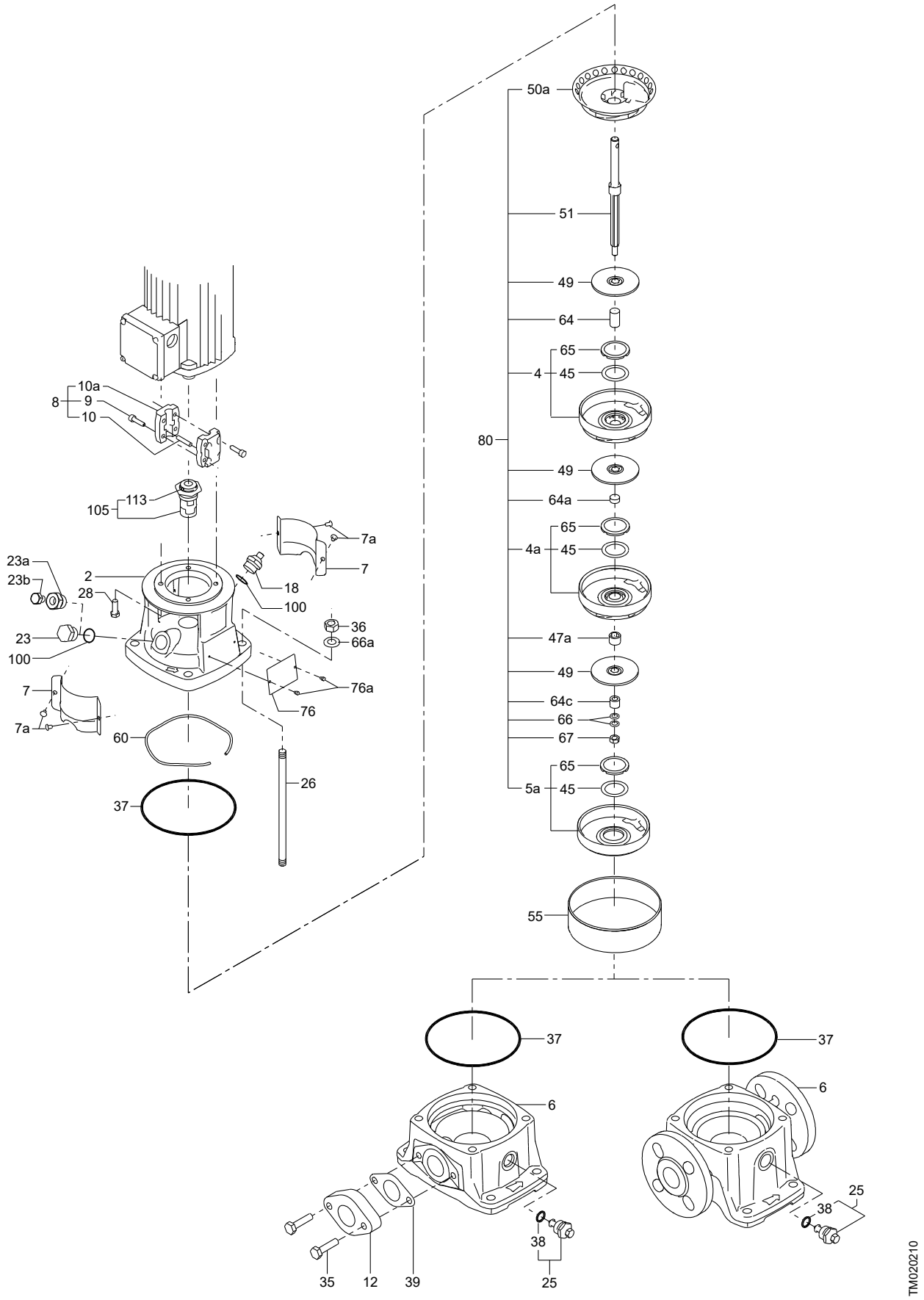
50a
51
49
64
65
4
45
80
49
64a
65
4a
45
47a
49
64c
66
67
65
5a
45
55
37
37
6
6
25
38
38
25
35
12
39
10a
8
9
10
105
113
7a
23a
23b
2
28
7
18
100
36
66a
23
100
76a
7
7a
76
60
26
37
TM020210

Chamber stack complete (silicon carbide bearing)

Pump type	CR/CRI 1	CRN 1	CR/CRI 3	CRN 3
Number of stages	Kit No	Kit No	Kit No	Kit No
2	*96453485*	*96453507*	*96453529*	*96453552*
3	*96453486*	*96453508*	*96453530*	*96453553*
4	*96453487*	*96453509*	*96453531*	*96453554*
5	*96453488*	*96453510*	*96453532*	*96453555*
6	*96453489*	*96453511*	*96453533*	*96453556*
7	*96453490*	*96453512*	*96453534*	*96453557*
8	*96453491*	*96453513*	*96453535*	*96453558*
9	*96453492*	*96453514*	*96453536*	*96453559*
10	*96453493*	*96453515*	*96453537*	*96453560*
11	*96453494*	*96453516*	*96453538*	*96453561*
12	*96453495*	*96453517*	*96453539*	*96453562*
13	*96453496*	*96453518*	*96453540*	*96453563*
15	*96453497*	*96453519*	*96453541*	*96453564*
17	*96453498*	*96453520*	*96453542*	*96453565*
19	*96453499*	*96453521*	*96453543*	*96453566*
21	*96453500*	*96453522*	*96453544*	*96453567*
23	*96453501*	*96453523*	*96453545*	*96453568*
25	*96453502*	*96453524*	*96453546*	*96453569*
27	*96453503*	*96453525*	*96453547*	*96453570*
29	-	-	*96453548*	*96453571*
30	*96453504*	*96453526*	-	-
31	-	-	*96453549*	*96453572*
33	*96453505*	*96453527*	*96453550*	*96453573*
36	*96453506*	*96453528*	*96453551*	*96453574*

Coupling complete

Motor/pump shaft diameter [mm]	Kit No
14/12	*415060*
19/12	*415061*
24/12	*415062*
28/12	*415063*
38/12	*415065*
15.8/12, NEMA	*415314*
28.5/12, NEMA	*415315*

Content

Pos.	Description	Quantity
9	Screw	4
10	Pin	1
10a	Coupling half	2

CR, CRI, CRN 1, 3

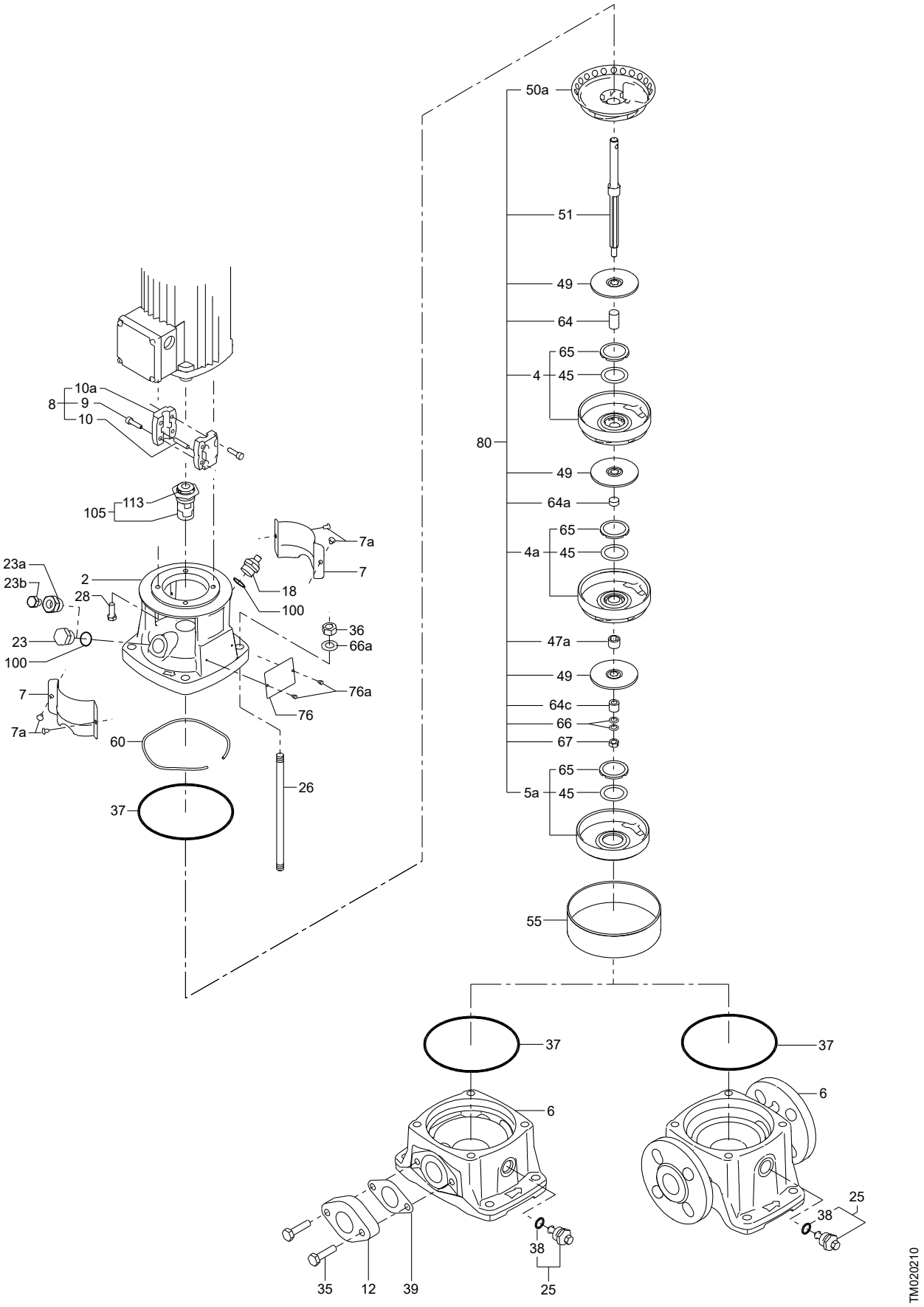
50a
51
49
64
65
4
45
80
49
64a
65
4a
45
47a
49
64c
66
67
65
5a
45
55
37
37
6
6
25
38
38
25
35
12
39
10a
8
9
10
105
113
7a
7
23a
23b
2
28
18
100
36
66a
23
100
76a
7
7a
76
60
26
37
TM020210

CR 2

50/60 Hz, Models C, D

Chamber stack complete

Consists of items: 4, 4a, 5a, 47a, 49, 50a, 51, 61, 64, 64a, 64c, 66, 67	Kit No	Kit No
Number of stages	Ceramic bearings	Bronze bearings
2	*405102*	*405321*
3	*405103*	*405322*
4	*405104*	*405323*
5	*405105*	*405324*
6	*405106*	*405325*
7	*405107*	*405326*
8	*405115*	*405343*
9	*405108*	*405327*
10	*405116*	*405344*
11	*405109*	*405328*
12	*405117*	*405345*
13	*405110*	*405329*
15	*405111*	*405330*
18	*405112*	*405331*
22	*405113*	*405332*
26	*405114*	*405333*

Coupling complete

Description	Kit No
14/12	*415060*
19/12	*415060*
24/12	*415062*
28/12	*415063*
38/12	*415065*
15.8/12	*415314*
28.5/12, NEMA	*415315*

Content

Pos.	Description	Quantity
8	Coupling half	2
9	Screw	4
10	Pin	1

Impeller

Pos.	Kit No	*405083*
	Description	
49	Impeller	2
64	Spacing pipe for impeller	2

Shaft seal

Pos.	Kit No	985167	405146	96588264	405096	405097	985727	985186	985720	985721	405348	405347
	Description	**AUUE/V**	**AUUE/V**	**AUUE**	**BUBE**	**BUBV**	**RUUE/V**	**CVBV**	**AUUK**	**AUBK**	**BQQE**	**BQQV**
37	Sleeve gasket	2			2	2	2	2	2	2	2	2
37	Vulcanised sleeve gasket (NBR)	-	2	-	-	-	-	-	-	-	-	-
37	Vulcanised sleeve gasket (EPDM)	-	-	2	-	-	-	-	-	-	-	-
105	Shaft seal	1	1	1	1	1	1	1	1	1	1	1

Wear parts

Pos.	Kit No	405098	405099	405100	96588266	405319	405320
	Number of stages	**2-9**	**11-18**	**22-26**	**2-9**	**11-18**	**22-26**
	Description	**Ceramic bearings**			**Bronze bearings**		
4a	Bearing chamber	1	2	3	1	2	3
37	Sleeve gasket	2	2	2	2	2	2
38	Drain plug gasket	1	1	1	1	1	1
39	Flange gasket	2	2	2	2	2	2
45	Neck ring	8	14	23	8	14	23
47a	Bearing ring	1	2	3	1	2	3
61	Spacer for shaft seal	1	1	1	1	1	1
65	Neck ring retainer	8	14	23	8	14	23
64c	Spacer	1	1	1	1	1	1
66	Spring washer	1	1	1	1	1	1
67	Lock nut	1	1	1	1	1	1
68	O-ring (1 EPDM and 1 FKM)	1	1	1	1	1	1
100	O-ring (1 EPDM and 1 FKM)	1	1	1	1	1	1

CR 2

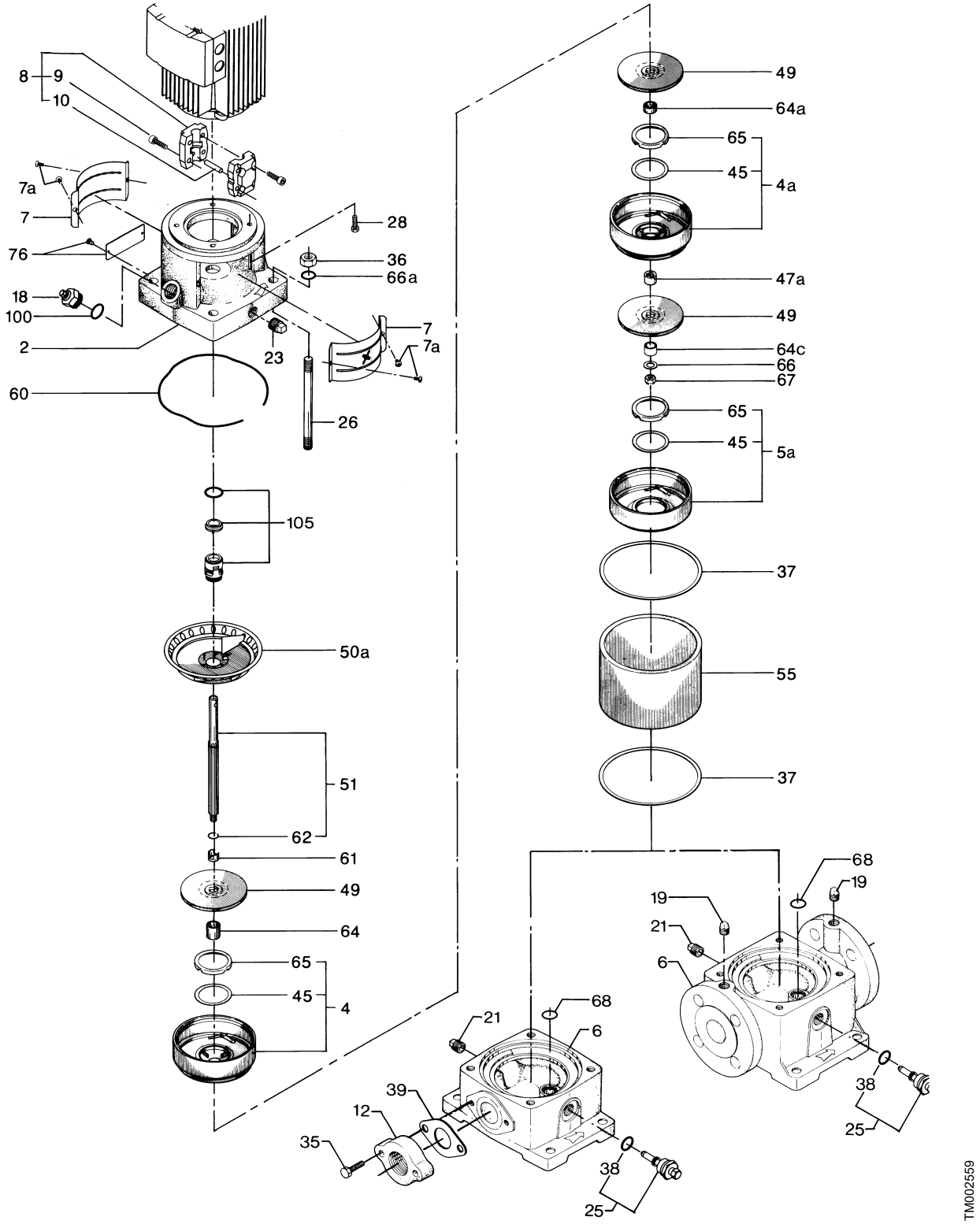
8
9
10
7a
7
76
18
100
2
60
28
36
66a
23
7
7a
26
105
50a
51
62
61
49
64
65
45
4
49
64a
65
45
4a
47a
49
64c
66
67
65
45
5a
37
55
37
68
19
19
21
6
38
25
21
68
6
39
12
35
38
25
TM002559

CR 4

50/60 Hz, Models C, D

Chamber stack complete

Consists of items: 4, 4a, 5a, 47a, 49, 50a, 51, 61, 64, 64a, 64c, 66, 66b, 67	Kit No	Kit No
Number of stages	Ceramic bearings	Bronze bearings
1	*415254*	*415333*
2	*415255*	*415334*
3	*415256*	*415335*
4	*415257*	*415336*
5	*415258*	*415337*
6	*415259*	*415338*
7	*415260*	*415339*
8	*415261*	*415340*
10	*415262*	*415341*
12	*415263*	*415342*
14	*415264*	*415343*
16	*415265*	*415344*
19	*415266*	*415345*
22	*415267*	*415346*

Coupling complete

Motor/pump shaft diameter [mm]	Kit No
14/12	*415060*
19/12	*415061*
24/12	*415062*
28/12	*415063*
38/12	*415065*
15.8/12, NEMA	*415314*
28.5/12, NEMA	*415315*

Impeller

Pos.	Kit No	*415232*
	Description	
49	Impeller	2
64	Spacing pipe for impeller	2

Content

Pos.	Description	Quantity
8	Coupling half	2
9	Screw	4
10	Pin	1

Shaft seal

Pos.	Kit No	*985167*	*405146*	*985769*	*405096*	*405097*	*985727*	*985186*	*985720*	*985721*	*405348*	*405347*
	Description	AUUE/V	AUUE/V	AUUE	BUBE	BUBV	RUUE/V	CVBV	AUUK	AUBK	BQQE	BQQV
37	Sleeve gasket	2	-	-	2	2	2	2	2	2	2	2
37	Vulcanised sleeve gasket (NBR)	-	2	-	-	-	-	-	-	-	-	-
37	Vulcanised sleeve gasket (EPDM)	-	-	2	-	-	-	-	-	-	-	-
105	Shaft seal	1	1	1	1	1	1	1	1	1	1	1

Wear parts

Pos.	Kit No	415286	415287	415349	415288	415350	415351	415352	415353
	Number of stages	**1-6**	**7-12**	**14-16**	**19-22**	**1-6**	**7-12**	**14-16**	**19-22**
	Description	**Ceramic bearings**				**Bronze bearings**			
4a	Bearing chamber	1	2	3	4	1	2	3	4
37	Sleeve gasket	2	2	2	2	2	2	2	2
38	Drain plug gasket	1	1	1	1	1	1	1	1
39	Flange gasket	2	2	2	2	2	2	2	2
45	Neck ring	5	10	13	18	5	10	13	18
47a	Bearing ring	1	2	3	4	1	2	3	4
61	Spacer for shaft seal	1	1	1	1	1	1	1	1
64c	Spacer	1	1	1	1	1	1	1	1
65	Neck ring retainer	5	10	13	18	5	10	13	18
66	Spring washer	1	1	1	1	1	1	1	1
67	Lock nut	1	1	1	1	1	1	1	1
68	O-ring	1	1	1	1	1	1	1	1
100	O-ring *	1	1	1	1	1	1	1	1

* EPDM and FKM

CR 4

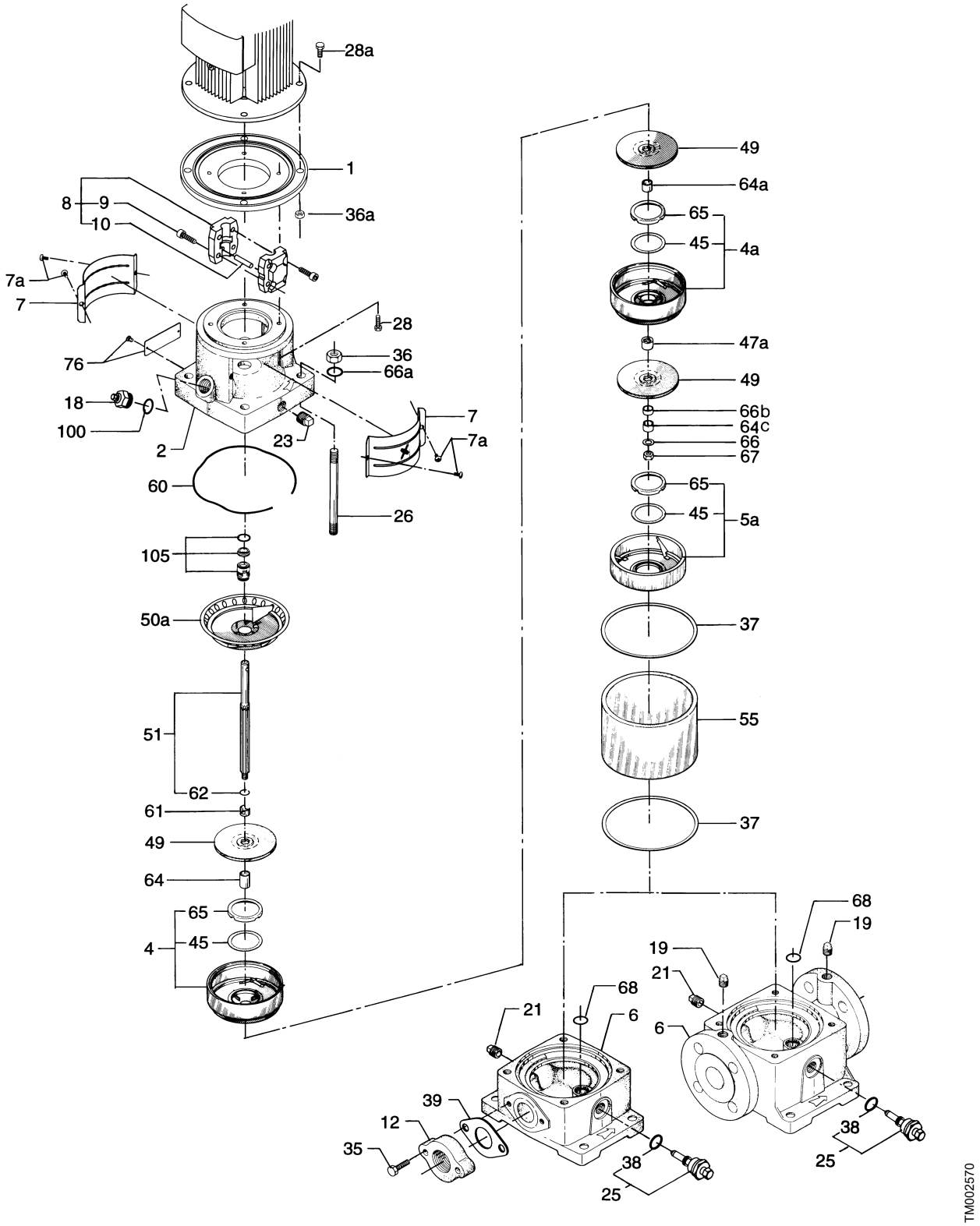
28a
1
8
9
10
36a
7a
7
28
36
66a
76
18
100
2
23
7
7a
60
26
105
50a
51
62
61
49
64
65
4
45
49
64a
65
45
4a
47a
49
66b
64c
66
67
65
45
5a
37
55
37
68
19
19
21
68
21
6
6
39
12
35
38
25
38
25
TM002570

CR, CRI, CRN 5

50/60 Hz

Coupling complete

Motor/pump shaft diameter [mm]	Kit No
14/12	*415060*
19/12	*415061*
24/12	*415062*
28/12	*415063*
38/12	*415065*
15.8/12 (NEMA)	*415314*
28.5/12 (NEMA)	*415315*
34.9/12 (NEMA)	*96478700*

Content

Pos.	Description	Quantity
105	Shaft seal	1

O-ring

Pos.	Kit No	*96455090*	*96455091*
	Description	EPDM	FKM
37	O-ring 137.5 x 3.3	2	2
38	O-ring 16.3 x 2.4	1	1
100	O-ring 16.3 x 2.4	2	2
109	O-ring 22 x 2.75	1	1

Shaft seal

Description	Kit No
HQQE	*96455086*
HQQV	*96455087*
HQQK	*96533326*
HQQF	*96533327*
HQBE	*96455088*
HQBV	*96455089*
HQBK	*96491375*
HUBE	*96455082*
HUBV	*96455083*
HUBK	*96533322*
HUBF	*96533323*
HUUE	*96455084*
HUUV	*96455085*
HUUV[1]	*91043611*
HUUK	*96533324*
HUUF	*96533325*

1 Silicone-free cartridge

Content

Pos.	Description	Quantity
105	Shaft seal	1

Wear parts

Pos.	Bearings	Kit No					
	Silicon carbide	*96455096*	*96455097*	*96455098*	*96455099*	*96455101*	*96455100*
	Bronze	*96455103*	*96460106*	*96455107*	*96455108*	*96460107*	*96455109*
	Carbon graphite	*96460141*	*96460142*	*96455113*	*96455114*	*96460143*	*96455115*
	Description/stages	-7	-12	-16	-22	.26	-36
4a	Chamber with bearing	1	2	3	4	5	6
39	Gasket	2	2	2	2	2	2
45	Neck ring	6	10	13	18	21	30
47a	Bearing ring, rotating	1	2	3	4	5	6
64a	Spacing pipe	1	2	3	4	5	6
64c	Clamp splined	1	1	1	1	1	1
65	Neck ring retainer	6	10	13	18	21	30
66	Lock washer	1	1	1	1	1	1
67	Lock nut	1	1	1	1	1	1

CR5

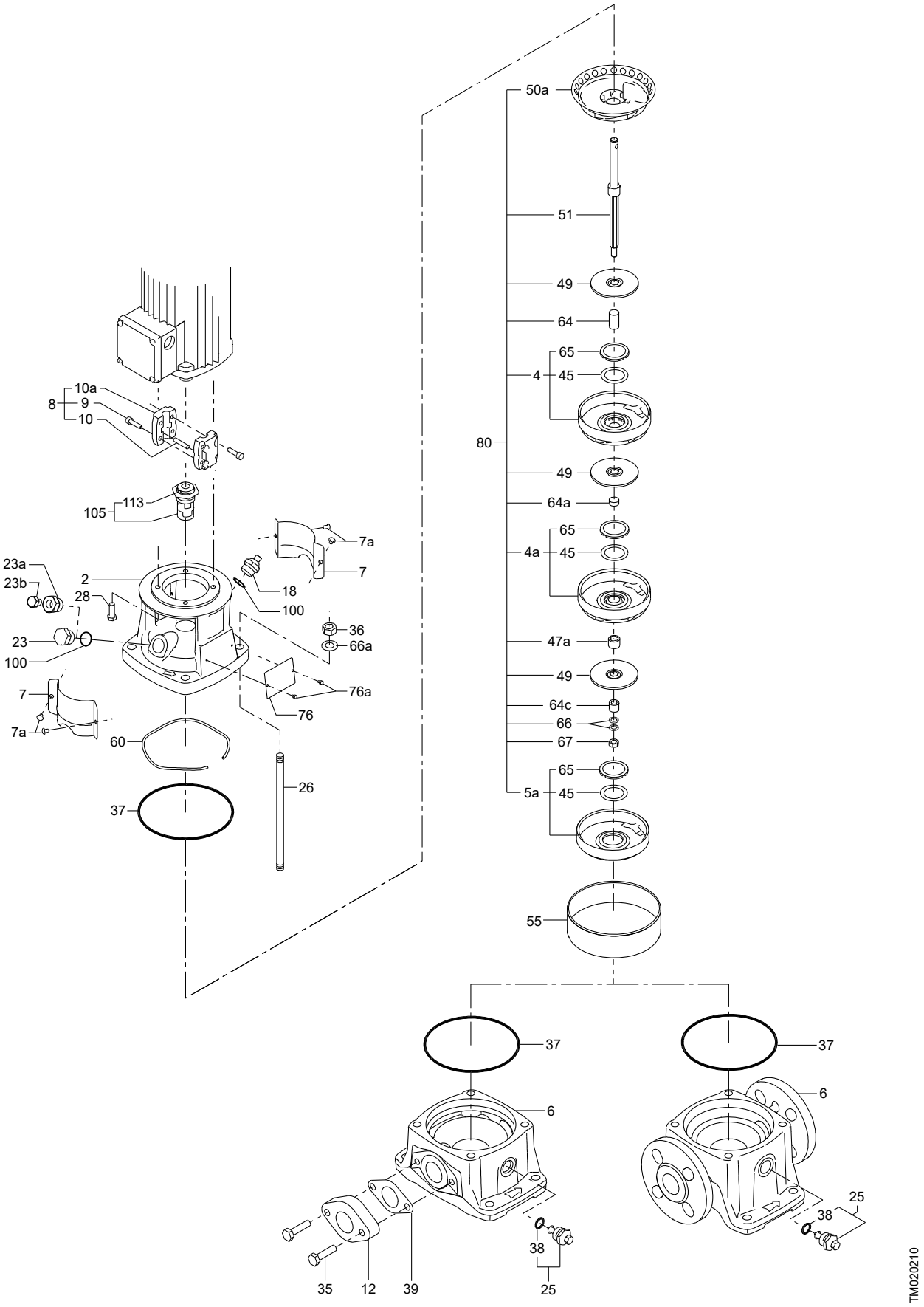
50a
51
49
64
65
4
45
80
49
64a
65
4a
45
47a
49
64c
66
67
65
5a
45
55
10a
8
9
10
113
105
7a
7
23a
23b
2
28
18
100
36
66a
23
100
76a
7
7a
76
60
26
37
37
37
6
6
25
38
38
35
12
39
25
TM020210

CRI / CRN5

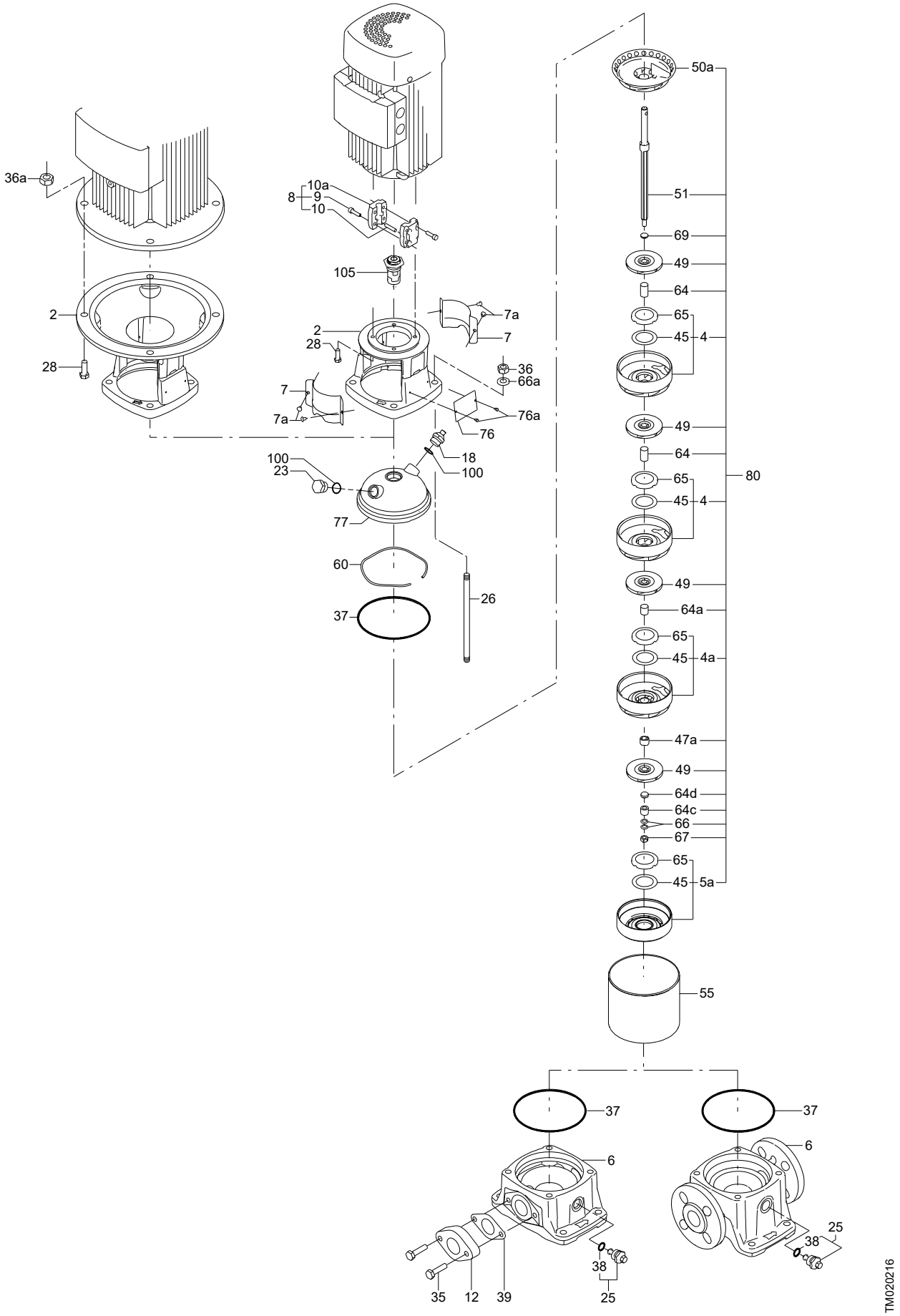
36a
2
28
10a
8
9
10
105
2
28
7a
7
36
66a
7
7a
76a
76
18
100
100
23
77
60
37
26
50a
51
69
49
64
65
45
4
49
64
65
45
4
80
49
64a
65
45
4a
47a
49
64d
64c
66
67
65
45
5a
55
37
37
6
6
25
38
38
25
35
12
39
TM020216

Chamber stack complete

Pos.	Pump type	CR/CRI 5	CRN 5
	SiC/SiC bearings	Kit No	Kit No
80	2	*96453575*	*96453598*
	3	*96453576*	*96453599*
	4	*96453577*	*96453600*
	5	*96453578*	*96453601*
	6	*96453579*	*96453602*
	7	*96453580*	*96453603*
	8	*96453581*	*96453604*
	9	*96453582*	*96453605*
	10	*96453583*	*96453606*
	11	*96453584*	*96453607*
	12	*96453585*	*96453608*
	13	*96453586*	*96453609*
	14	*96453587*	*96453610*
	15	*96453588*	*96453611*
	16	*96453589*	*96453612*
	18	*96453590*	*96453613*
	20	*96453591*	*96453614*
	22	*96453592*	*96453615*
	24	*96453593*	*96453616*
	26	*96453594*	*96453617*
	29	*96453595*	*96453618*
	32	*96453596*	*96453619*
	36	*96453597*	*96453620*

Coupling guard

Description	Kit No
MG 71 - 80	*96505130*
MG 90 - 132	*96505131*
NEMA, F 182/213 TC	*96505132*

Content

Pos.	Description	Quantity
7	Coupling guard	2
7a	Screw	4

Plug

Description	Kit No
EPDM/FKM0	*96505133*
EPDM/FKM/NEMA	*96511103*

Content

Pos.	Description		Quantity
18	Air vent screw		1
23a	Pipe plug		1
23b	Pipe plug		1
25	Drain plug with bypass valve		1
38	O-ring 16.3 x 2.4	EPDM	1
		FKM	1
100	O-ring 16.3 x 2.4	EPDM	2
		FKM	2

CR5

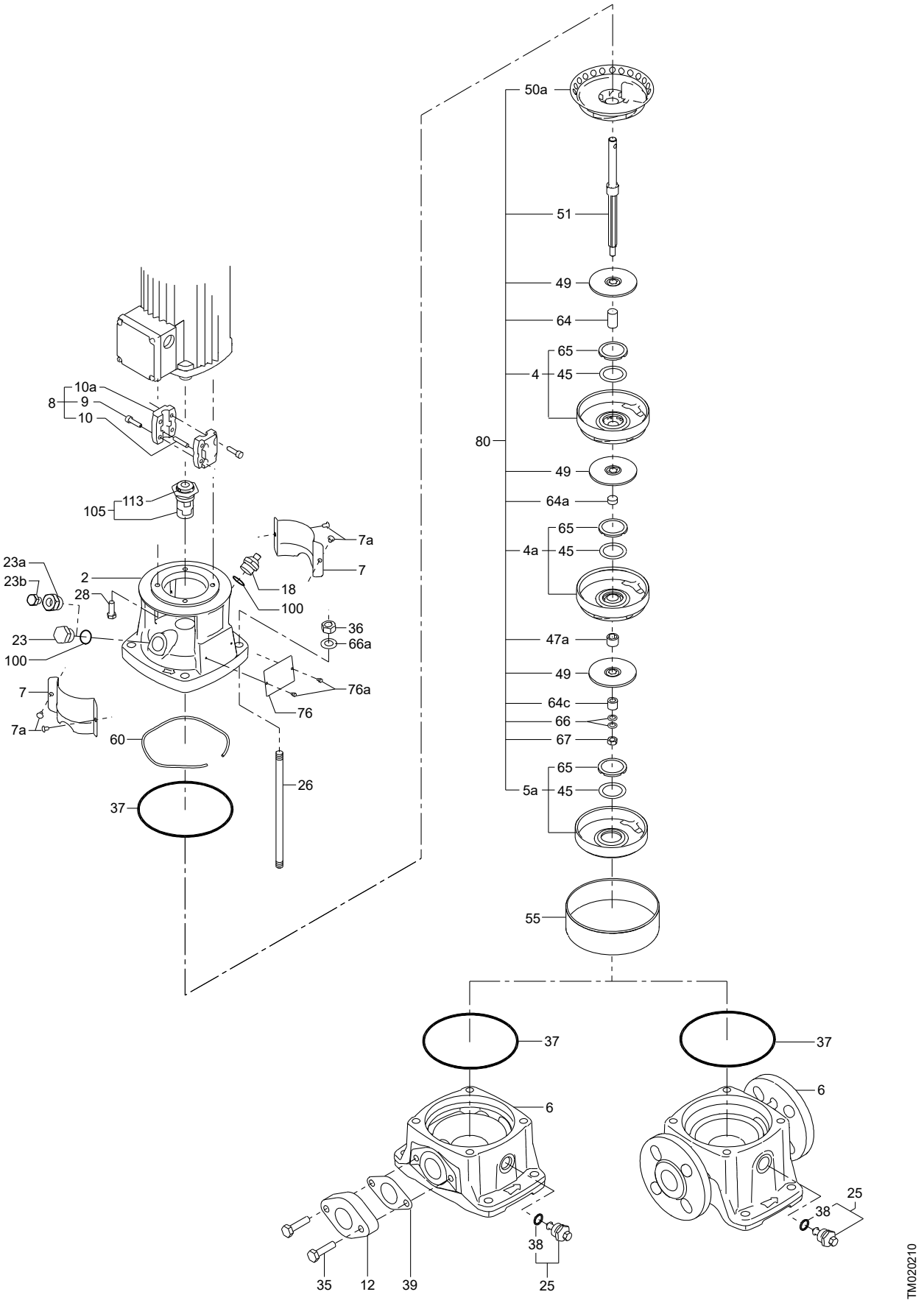
50a
51
49
64
65
4
45
80
49
64a
65
4a
45
47a
49
64c
66
67
65
5a
45
55
37
6
38
25
35
12
39
37
6
25
38
TM020210
10a
8
9
10
105
113
7a
23a
23b
2
28
18
100
36
66a
23
100
76a
7
7a
76
60
26
37

CRI / CRN5

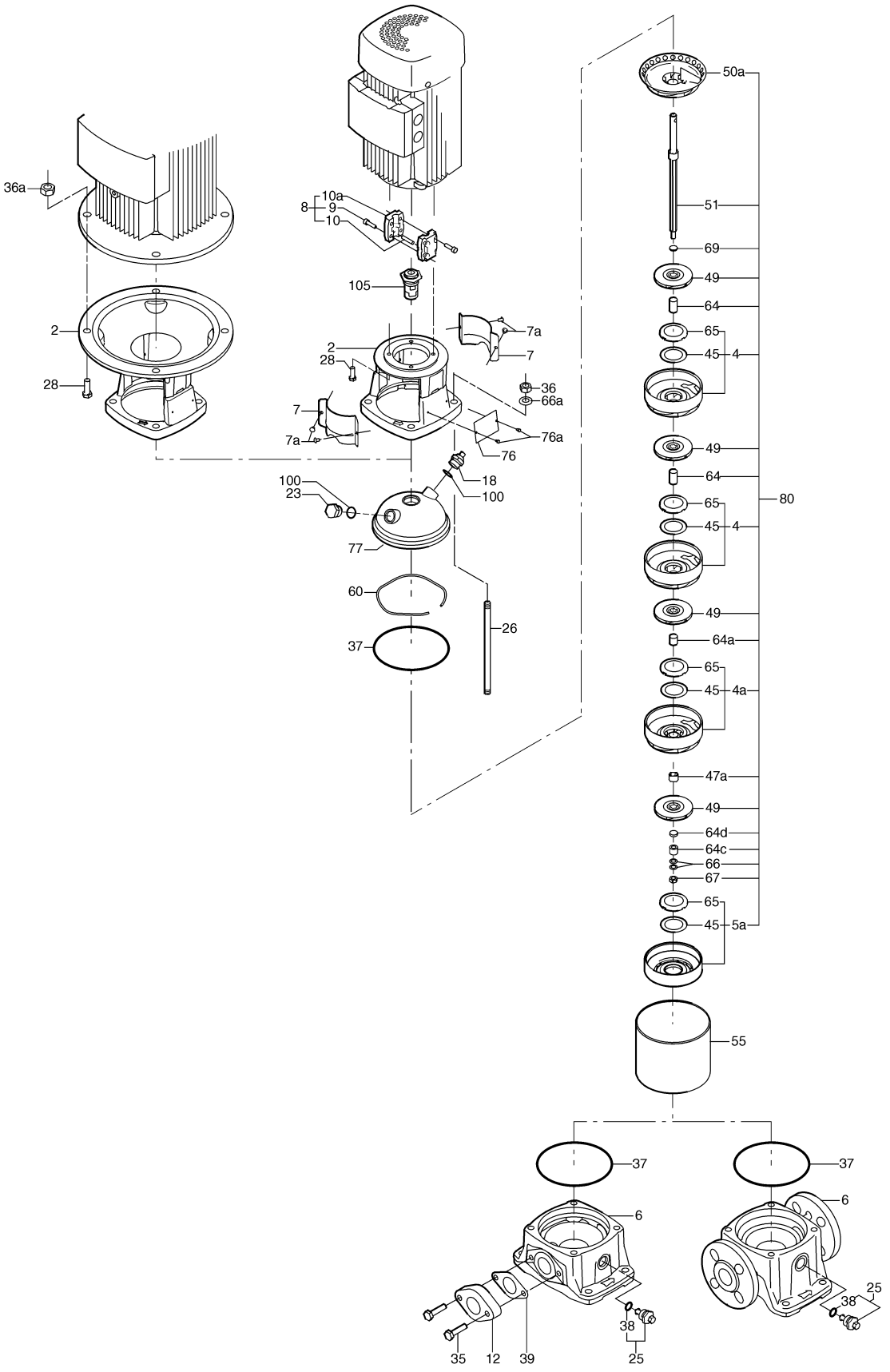
36a
2
28
10a
8
9
10
105
2
28
7
7a
7a
36
66a
76a
76
18
100
100
23
77
60
37
26
50a
51
69
49
64
65
45
4
49
64
65
45
4
80
49
64a
65
45
4a
47a
49
64d
64c
66
67
65
45
5a
55
37
6
35
12
39
38
25
37
6
38
25
TM020216

CR 8

50/60 Hz, Models A, B

Chamber stack complete

Consists of items: 3, 3a, 4, 4a, 44, 47a, 49, 51, 61, 64, 64a, 64c, 64d, 66, 67, 69	Kit No	Kit No
Number of stages	Ceramic bearings	Bronze bearings
1	*425049*	*425267*
2	*425050*	*425268*
3	*425051*	*425269*
4	*425052*	*425270*
5	*425053*	*425271*
6	*425054*	*425272*
8	*425055*	*425273*
10	*425056*	*425274*
12	*425057*	*425275*
14	*425058*	*425276*
16	*425059*	*425277*
18	*425060*	*425278*
20	*425061*	*425279*

Coupling complete

Motor/pump shaft diameter [mm]	Kit No
14/16	*339114*
19/16	*339119*
24/16	*339124*
28/16	*339128*
38/16	*339138*
42/16	*339142*
15.9/16, NEMA	*425260*
28.6/16, NEMA	*425261*
34.9/16, NEMA	*425262*
41.3/16, NEMA	*425263*

Content

Pos.	Description	Quantity
8	Coupling half	2
9	Screw	4
10	Pin	1

Shaft seal

Pos.	Kit No	*985204*	*425085*	*985874*	*425062*	*425063*	*985838*	*985829*	*985828*	*985834*	*425763*	*425762*
	Description	AUUE/V	AUUE/V	AUUE	BUBE	BUBV	RUUE/V	RUUK	AUUK	AUAK	BQQE	BQQV
37	Sleeve gasket	2	-	-	2	2	2	2	2	2	2	2
37	Vulcanised sleeve gasket	-	2	2	2	2	2	-	-	-	-	-
105	Shaft seal	1	1	1	1	1	1	1	1	1	1	1

Wear parts

Pos.	Kit No	*425066*	*425067*	*425068*	*425300*	*425301*	*425302*
	Number of stages	1-6	8-12	14-20	1-6	8-12	14-20
	Description	Ceramic bearings			Bronze bearings		
4a	Bearing chamber	1	2	3	1	2	3
37	Sleeve gasket	2	2	2	2	2	2
38	Drain plug gasket *	1	1	1	1	1	1
39	Flange gasket	2	2	2	2	2	2
45	Neck ring	5	10	17	5	10	17
47a	Bearing ring	1	2	3	1	2	3
57	O-ring for drain plug *	1	1	1	1	1	1
61	Spacer for shaft seal	1	1	1	1	1	1
62	Stop ring	1	1	1	1	1	1
64c	Spacer	1	1	1	1	1	1
65	Neck ring retainer	5	10	17	5	10	17
66	Spring washer	1	1	1	1	1	1
67	Lock nut	1	1	1	1	1	1
100	O-ring	1	1	1	1	1	1

* EPDM and FKM

CR 8

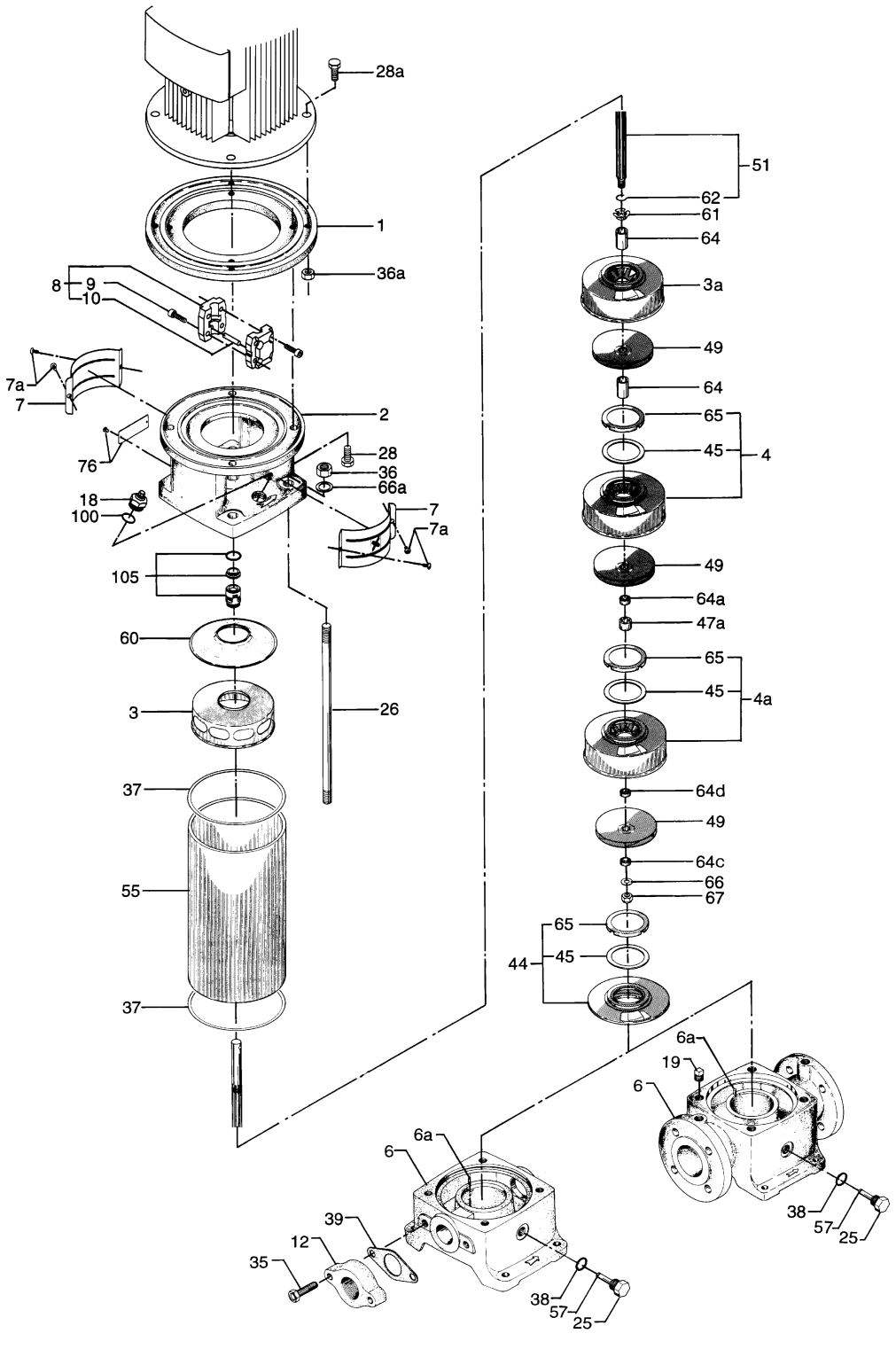
28a
1
36a
8
9
10
7a
7
2
76
28
36
66a
18
100
7
7a
105
60
3
26
37
55
37
51
62
61
64
3a
49
64
65
45
4
49
64a
47a
65
45
4a
64d
49
64c
66
67
65
44
45
6a
19
6
38
57
25
6a
6
39
12
35
38
57
25
TM002340

CR, CRI, CRN 10
50/60 Hz

Chamber stack complete (silicon carbide bearing)

Pos.	Pump type	CR	CRI	CRN
	Number of stages	Kit No	Kit No	Kit No
80	1	96508403	96491694	96491720
	2	96508404	96491695	96491721
	3	96508405	96491696	96491722
	4	96508406	96491697	96491723
	5	96508407	96491698	96491724
	6	96508408	96491699	96491725
	7	96508409	96491700	96491726
	8	96508410	96491701	96491727
	9	96508411	96491702	96491728
	10	96508412	96491703	96491729
	12	96508413	96491704	96491730
	14	96508414	96491705	96491731
	16	96508415	96491706	96491732
	17	96529403	96529404	96529405
	18	96508416	96491707	96491733
	20	96508417	96491708	96491734
	22	96508418	96491709	96491735

Coupling guard

Description	Kit No
MG 71 - 80	96509611
MG 90 - 100, 56C	96509612
MG 132, 182TC - 215TC	96509613
MG 132, 182TC - 215TC	96509614

Content

Pos.	Description	Quantity
7	Coupling guard	2
7a	Screw	4

Shaft seal

Description	Kit No
HQQE	96511844
HQQV	96511845
HQQK	96511846
HQQF	96511847
HQBE	96511848
HQBV	96511849
HUBE	96511836
HUBV	96511837
HUBK	96511838
HUBF	96511839
HUUE	96511840
HUUV	96511841
HUUK	96511842
HUUF	96511843

Content

Pos.	Description	Quantity
105	Shaft seal	1
	Adjusting fork	1

Wear parts

Pos.	Bearings	Kit No		
	Silicon carbide	96511889	96511922	96511925
	Bronze	96511920	96511923	96511926
	Carbon graphite	96511921	96511924	96511927
	Description/stages	-8	-14	-22
4a	Chamber with bearing	1	2	3
26b	Screw5	2	2	2
26c	Washer	2	2	2
45	Neck ring	7	12	19
47a	Bearing ring, rotating	1	2	3
61	Seal driver	1	1	1
62	Stop ring	1	1	1
64a	Spacing pipe	1	2	3
64c	Spacer lower	1	1	1
64d	Spacing pipe	1	2	3
65	Neck ring retainer	7	12	19
66	Lock washer	1	1	1
67	Lock nut	1	1	1

CR/N

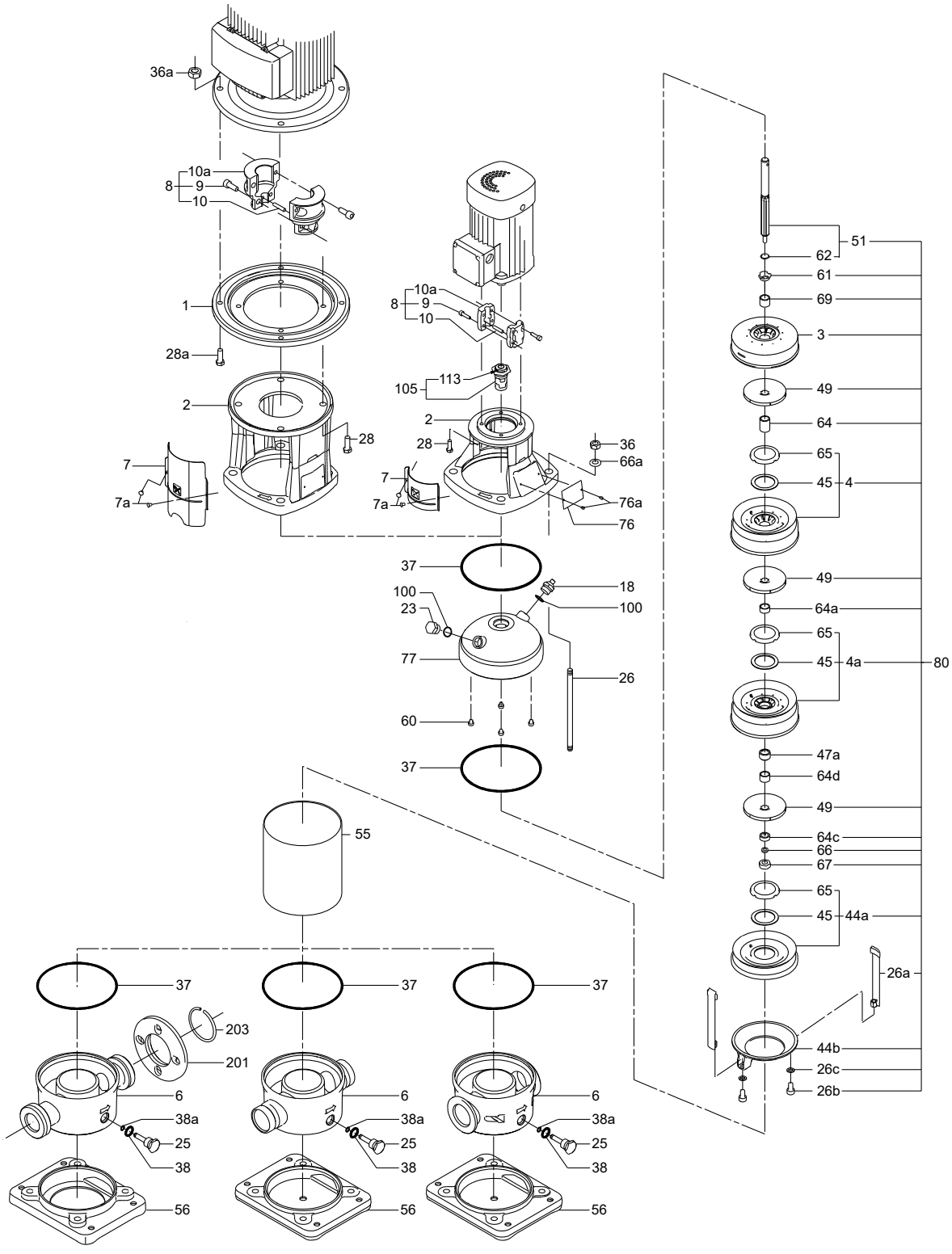
36a
10a
8
9
10
1
28a
2
28
7
7a
105
113
36
66a
76a
76
37
18
100
23
77
26
60
55
203
201
6
38a
25
38
56
51
62
61
69
3
49
64
65
45
4
64a
4a
80
47a
64d
64c
66
67
44a
26a
44b
26c
26b
TM026495

CR

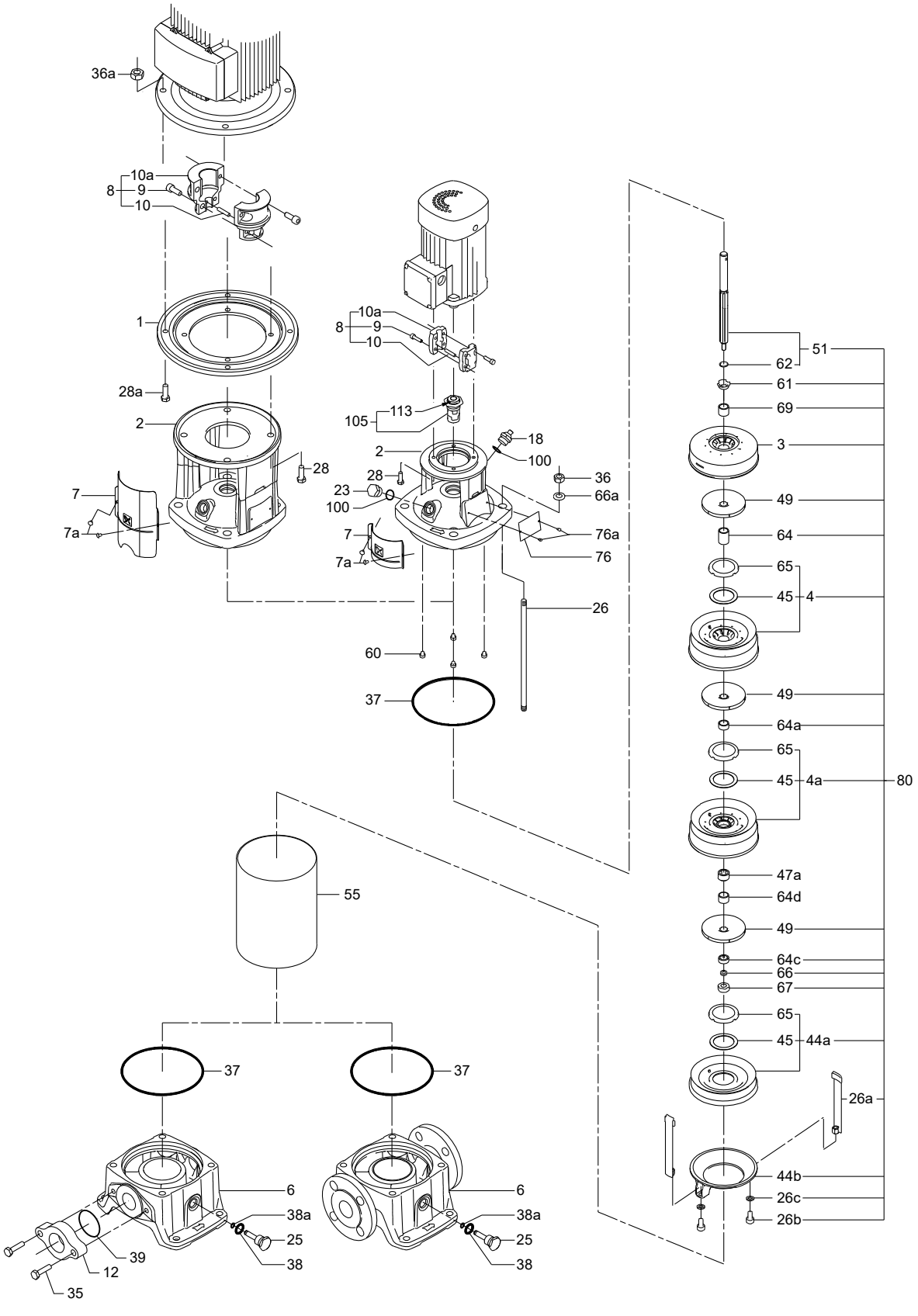
36a
10a
8
9
10
1
28a
2
28
7
7a
105
113
18
100
36
66a
23
76a
76
26
60
37
51
62
61
69
3
49
64
65
45
4
64a
4a
80
47a
64d
64c
66
67
44a
26a
44b
26c
26b
55
6
38a
25
38
39
12
35
TM026496

Coupling complete

Motor/pump shaft diameter [mm]	Kit No
14/16	*96511315*
19/16	*96511317*
24/16	*96511319*
28/16	*96511350*
38/16	*96511351*
15.9/16, NEMA	*96511353*
28.6/16, NEMA	*96511354*
34.9/16, NEMA	*96511355*
41.3/16, NEMA	*96511356*

Content

Pos.		Description	Quantity
8	9	Screw	4
	10	Pin	1
	10a	Coupling half	2

Plug

Pos.	Description	CR	CRI, CRN	CR NEMA	CRI, CRN NEMA
	Kit No	***96511311***	***96511312***	***96511313***	***96511314***
18	Air vent screw	1	1	1	1
23	Pipe plug	1	1	1	1
23a	Pipe plug 1/4"	-	-	1	1
25	Drain plug	1	1	1	1
38	O-ring 16.3x2.4 EPDM + FKM	1 + 1	1 + 1	1 + 1	1 + 1
38a	O-ring 5.3x2.4 EPDM + FKM	1 + 1	1 + 1	1 + 1	1 + 1
100	O-ring 16.3x2. EPDM + FKM	2 + 2	2 + 2	2 + 2	2 + 2

O-ring

Description	Kit No
EPDM	*96509609*
FKM	*96509610*

Content

Pos.	Description	Quantity
37	O-ring 170.7 x 3.3	2
38	O-ring 16.3 x 2.4	1
38a	O-ring 5.3 x 2.4	1
39	Gasket, oval flange, CR 10	2
	O-ring, oval flange, CR 15, 20	2
	Gasket, FGJ flange, CR 10	2
	Gasket, FGJ flange, CR 15, 20	2
60	Rubber spring	4
100	O-ring	2

CR/N

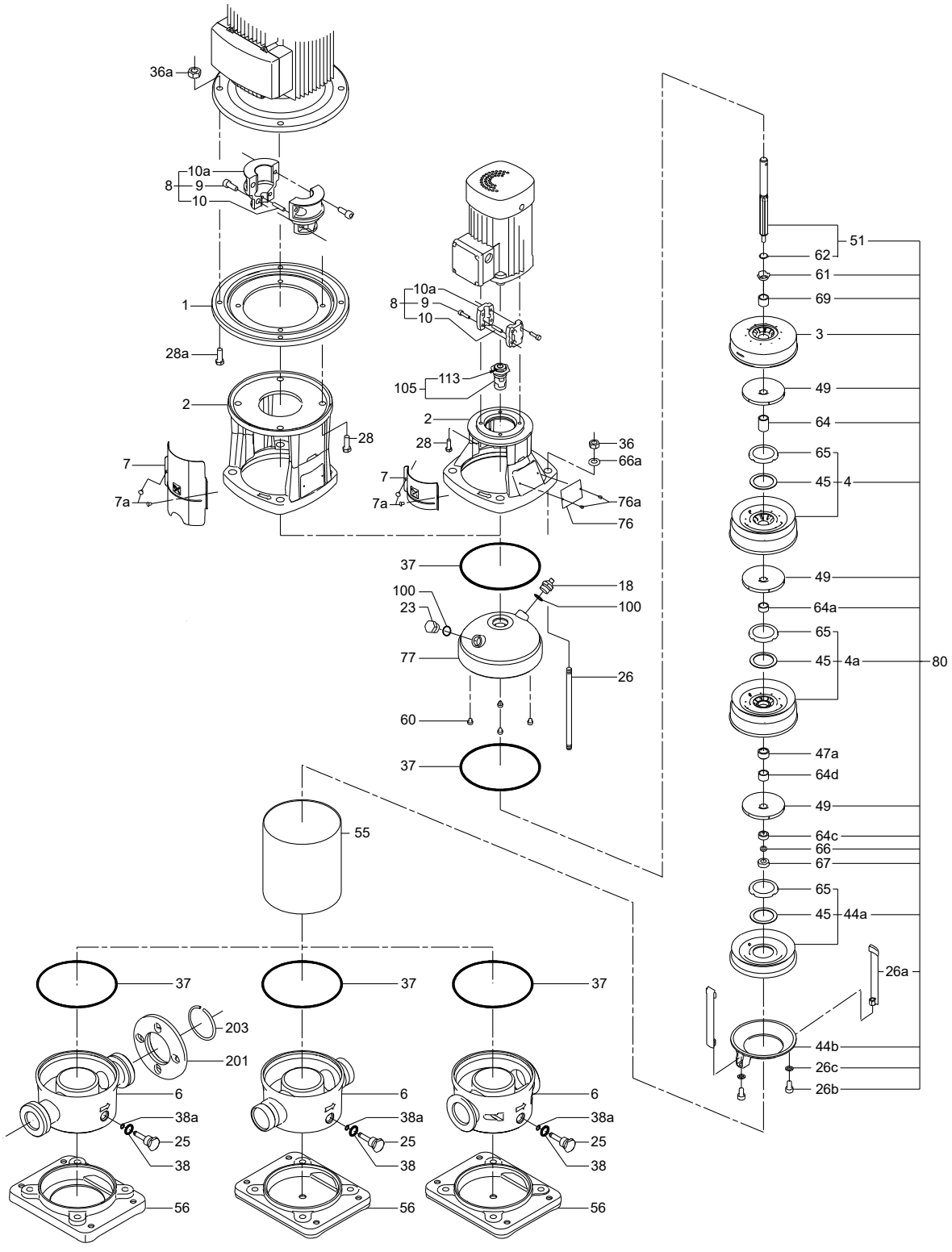
36a
10a
8
9
10
1
28a
2
28
7
7a
105
113
36
66a
76a
76
37
18
100
23
77
26
60
55
203
201
6
38a
25
38
56
51
62
61
69
3
49
64
65
45
4
4a
80
64a
47a
64d
64c
66
67
44a
26a
44b
26c
26b
TM026495

CR

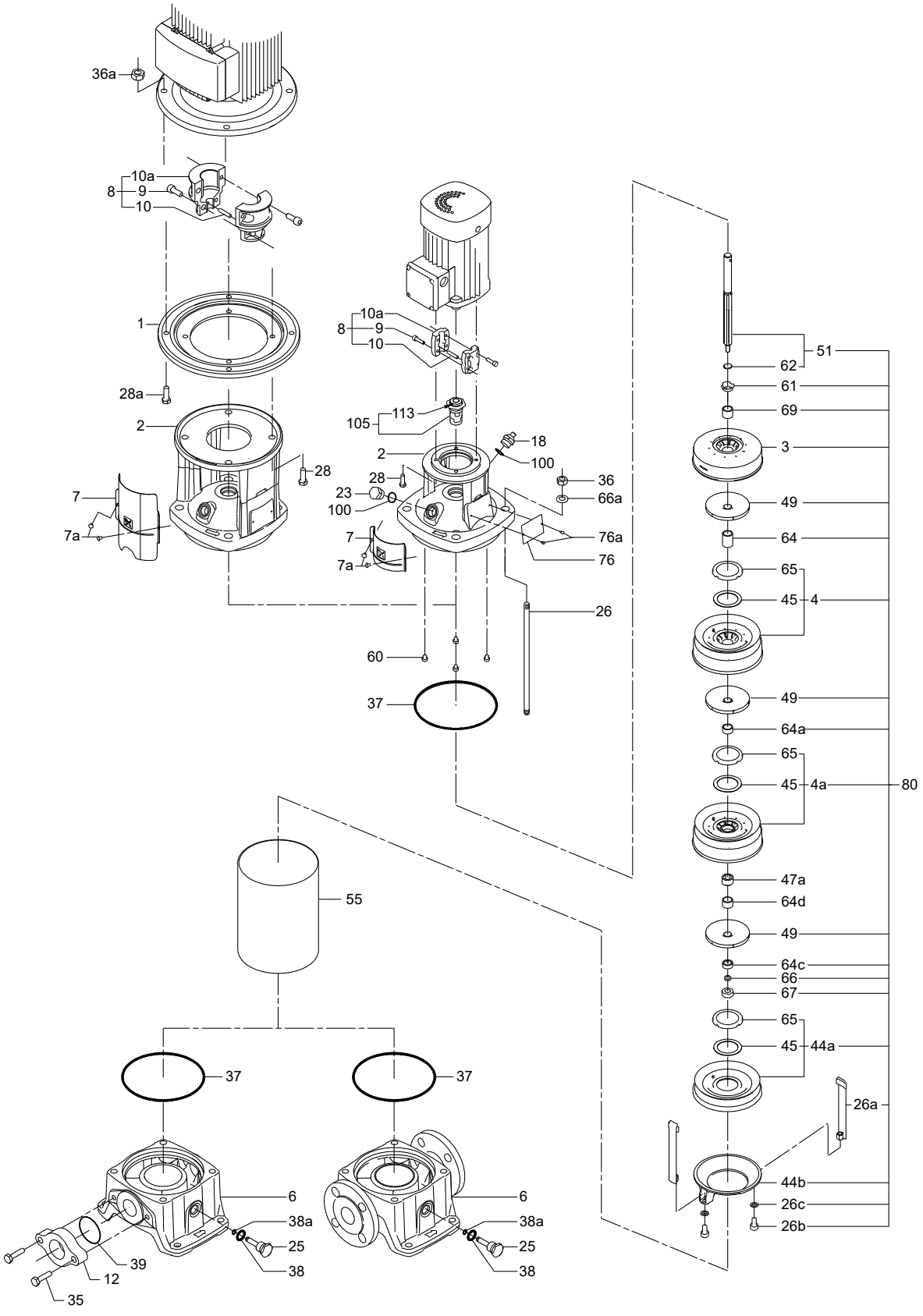
36a
10a
8
9
10
1
28a
2
28
7
7a
105
113
18
100
36
66a
23
76a
76
26
60
37
51
62
61
69
3
49
64
65
45
4
4a
80
64a
47a
64d
64c
66
67
44a
26a
44b
26c
26b
55
6
38a
25
38
39
12
35
TM026496

CR, CRI, CRN 15
50/60 Hz

Coupling guard

Description	Kit No
MG 71 - 80	*96509611*
MG 90 - 100, 56C	*96509612*
MG 132, 182TC - 215TC	*96509613*
MG 132, 182TC - 215TC	*96509614*

Content

Pos.	Description	Quantity
7	Coupling guard	2
7a	Screw	4

Plug

Pos.	Description	CR	CRI, CRN	CR NEMA	CRI, CRN NEMA
	Kit No	***96511311***	***96511312***	***96511313***	***96511314***
18	Air vent screw	1	1	1	1
23	Pipe plug	1	1	1	1
23a	Pipe plug	-	-	1	1
25	Drain plug	1	1	1	1
38	O-ring 16.3 x 2.4, EPDM + FKM	1 + 1	1 + 1	1 + 1	1 + 1
38a	O-ring 5.3 x 2.4, EPDM + FKM	1 + 1	1 + 1	1 + 1	1 + 1
100	O-ring 6.3 x 2.4, EPDM + FKM	2 + 2	2 + 2	2 + 2	2 + 2

Shaft seal

Description	Kit No
HQQE	*96511844*
HQQV	*96511845*
HQQK	*96511846*
HQQF	*96511847*
HQBE	*96511848*
HQBV	*96511849*
HUBE	*96511836*
HUBV	*96511837*
HUBK	*96511838*
HUBF	*96511839*
HUUE	*96511840*
HUUV	*96511841*
HUUK	*96511842*
HUUF	*96511843*

Content

Pos.	Description	Quantity
105	Shaft seal	1
	Adjusting fork	1

Wear parts

Pos.	Bearings	Kit No		
	Silicon carbide	***96511824***	***96511827***	***96511830***
	Bronze	***96511825***	***96511828***	***96511831***
	Carbon graphite	***96511826***	***96511829***	***96511832***
	Description/stages	**-6**	**-10**	**-17**
4a	Chamber with bearing	1	2	3
26b	Screw	2	2	2
26c	Washer	2	2	2
45	Neck ring	5	8	14
47a	Bearing ring, rotating	1	2	3
49c	Impeller wear ring	6	10	17
61	Seal driver	1	1	1
62	Stop ring	1	1	1
64a	Spacing pipe 17.0 mm	1	2	3
64b	Spacing pipe 5.0 mm	1	1	1
64c	Spacer lower	1	1	1
64d	Spacing pipe 12.6 mm	1	2	3
65	Neck ring retainer	5	8	14
66	Lock washer	1	1	1
67	Lock nut	1	1	1

CRI/N

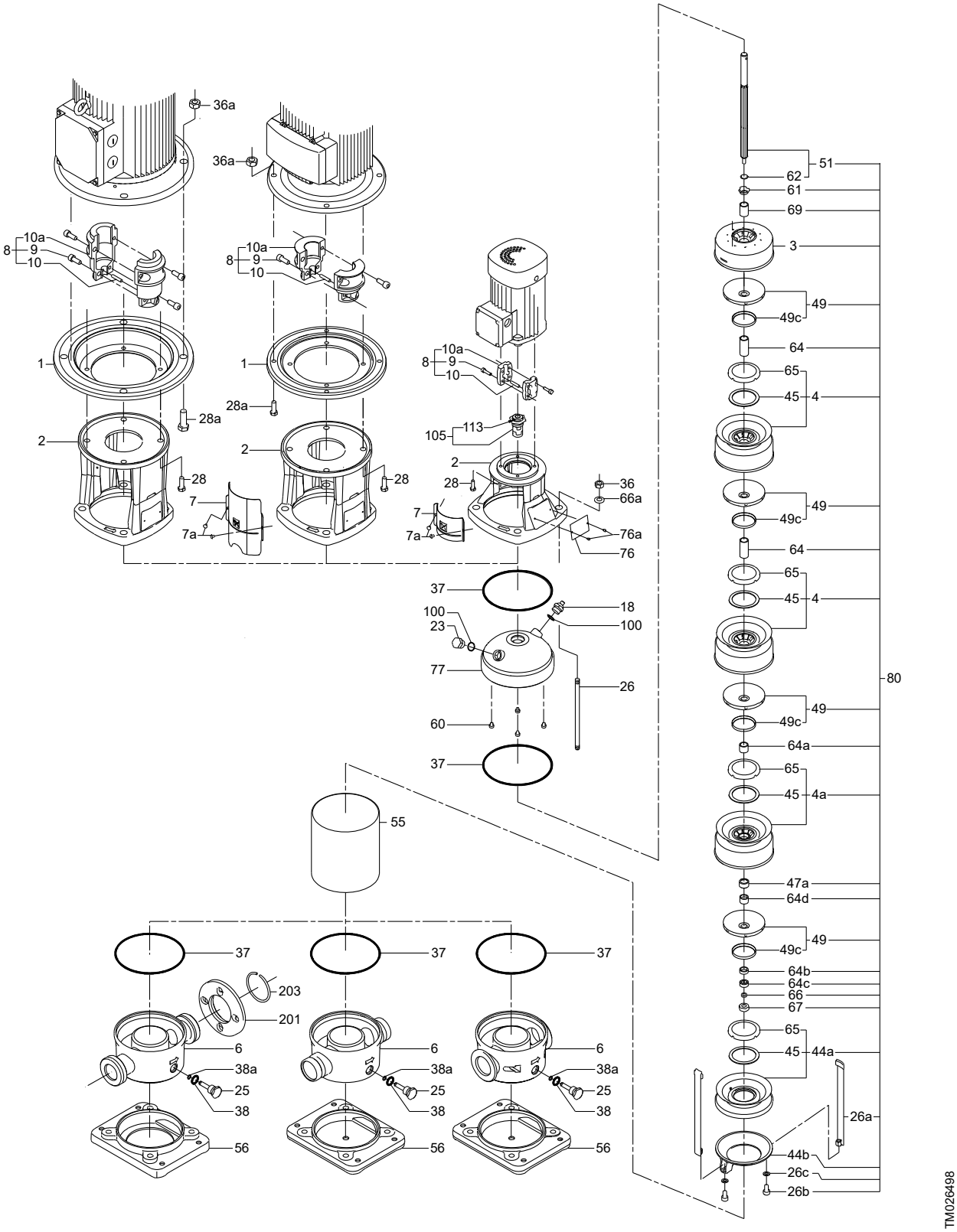
36a
10a
8
9
10
1
28a
2
28
7
7a
105
113
36
66a
76a
76
37
100
18
23
77
26
60
55
203
201
6
38a
25
38
56
51
62
61
69
3
49
49c
64
65
45
4
64a
4a
47a
64d
64b
64c
66
67
44a
26a
44b
26c
26b
80
TM026498

CR

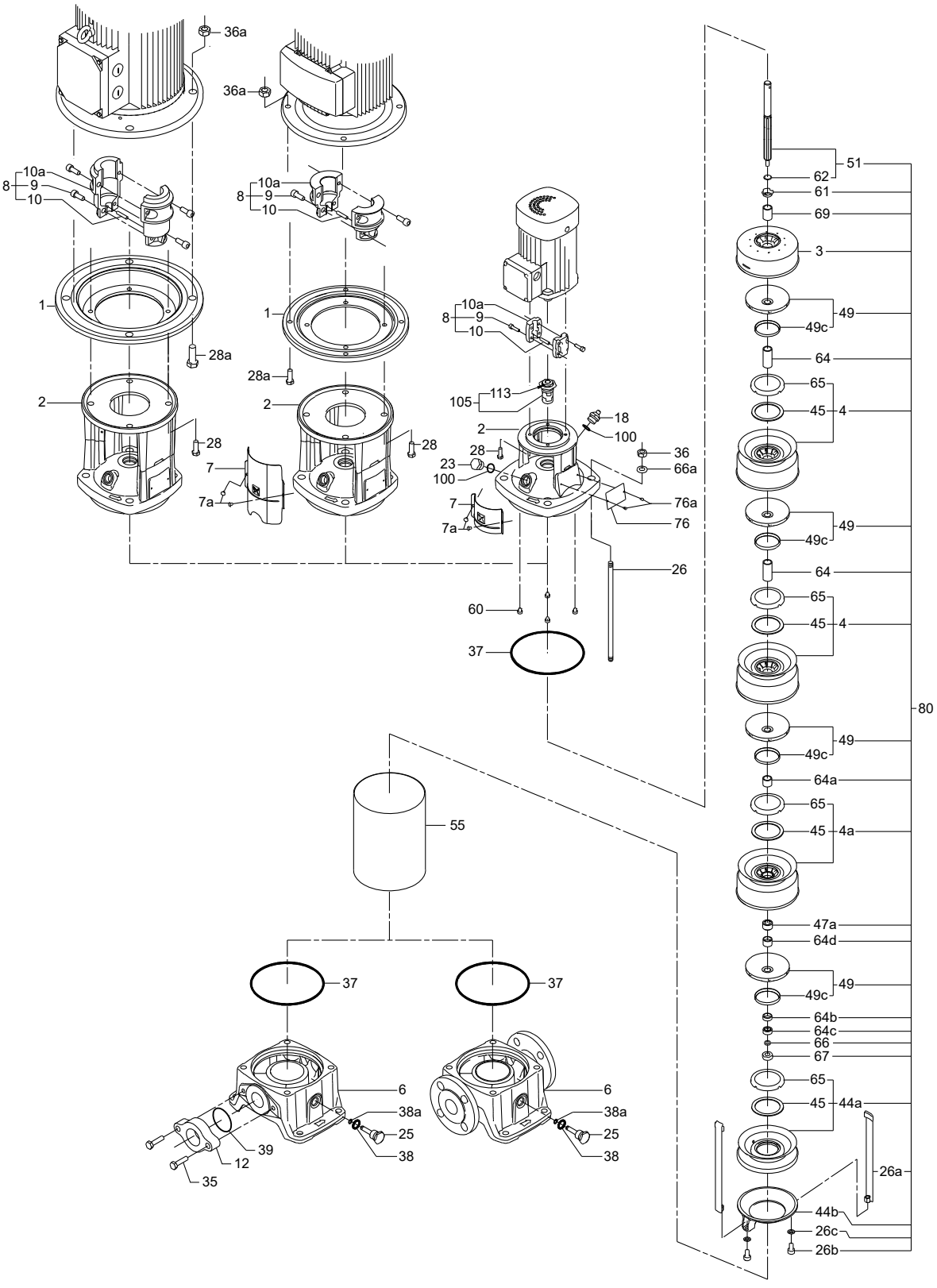
36a
36a
10a
8
9
10
10a
8
9
10
1
1
28a
28a
2
2
28
28
7
7a
10a
8
9
10
105
113
2
18
100
28
23
100
36
66a
7
7a
76a
76
26
60
37
51
62
61
69
3
49
49c
64
65
45
4
49
49c
64
65
45
4
80
49
49c
64a
65
45
4a
47a
64d
49
49c
64b
64c
66
67
65
45
44a
26a
44b
26c
26b
55
37
37
6
38a
25
38
39
12
35
6
38a
25
38
TM026497

Chamber stack complete (silicon carbide bearing)

Pos.	Pump type	CR	CRI	CRN
	Number of stages	Kit No	Kit No	Kit No
80	1	*96508453*	*96491736*	*96491749*
	2	*96508454*	*96491737*	*96491760*
	3	*96508455*	*96491738*	*96491761*
	4	*96508456*	*96491739*	*96491762*
	5	*96508457*	*96491740*	*96491763*
	6	*96508458*	*96491741*	*96491764*
	7	*96508459*	*96491742*	*96491765*
	8	*96508490*	*96491743*	*96491766*
	9	*96508491*	*96491744*	*96491767*
	10	*96508492*	*96491745*	*96491768*
	12	*96508493*	*96491746*	*96491769*
	14	*96508494*	*96491747*	*96491770*
	17	*96508495*	*96491748*	*96491771*

Coupling complete

Motor/pump shaft diameter [mm]	Kit No
14/16	*96511315*
19/16	*96511317*
24/16	*96511319*
28/16	*96511350*
38/16	*96511351*
42/16	*96511352*
15.9/16, NEMA	*96511353*
28.6/16, NEMA	*96511354*
34.9/16, NEMA	*96511355*
41.3/16, NEMA	*96511356*

Content

Pos.		Description	Quantity
8	9	Screw	4
	10	Pin	1
	10a	Coupling half	2

O-ring

Description	Kit No
EPDM	*96509609*
FKM	*96509610*
FFKM	*96533374*

Content

Pos.	Description	EPDM
37	O-ring	2
38	O-ring	1
38a	O-ring	1
39	Gasket, oval flange, CR 10	2
	O-ring 90 x 3, oval flange, CR 15, 20	2
	Gasket, FGJ flange, CR 10	2
60	Rubber spring	4
100	O-ring	2

CRI/N

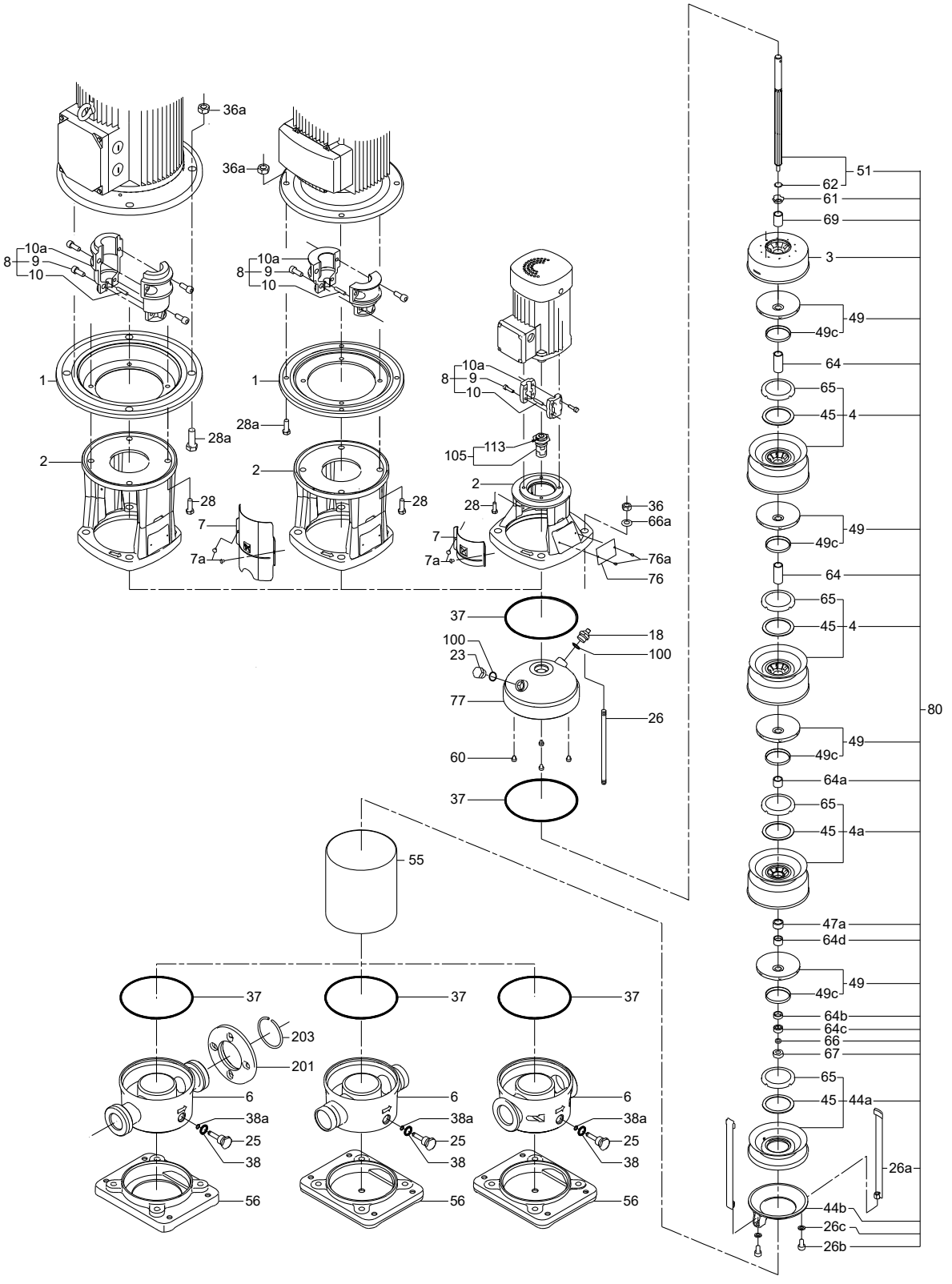
36a
10a
8
9
10
1
28a
2
28
7
7a
105
113
36
66a
76a
76
37
100
18
23
77
26
60
55
203
201
6
38a
25
38
56
51
62
61
69
3
49
49c
64
65
45
4
64a
4a
47a
64d
64b
64c
66
67
44a
26a
44b
26c
26b
80
TM026498

CR

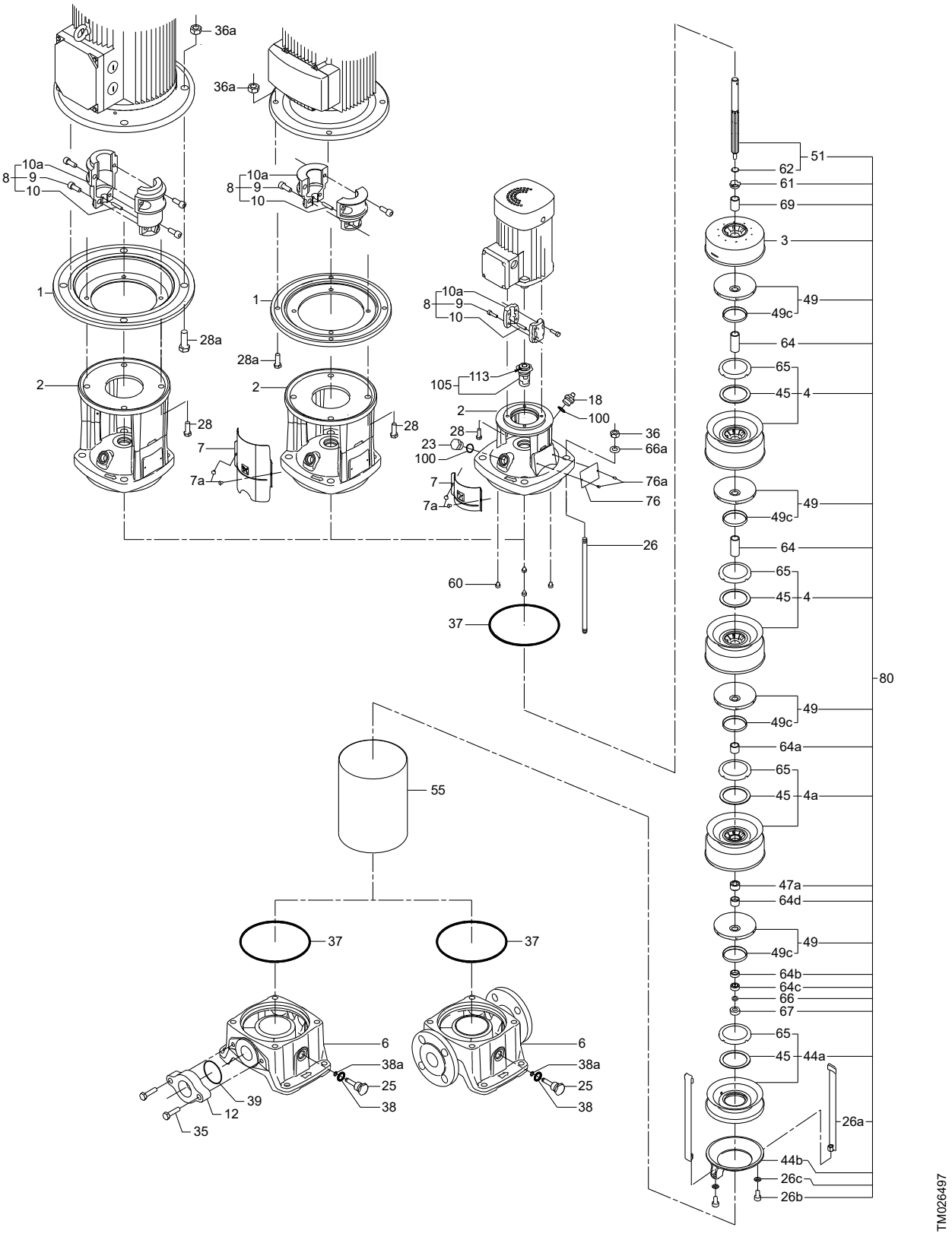
36a
36a
10a
8
9
10
10a
8
9
10
1
1
28a
28a
2
2
28
28
7
7a
10a
8
9
10
105
113
2
18
100
28
23
100
36
66a
7
7a
76a
76
26
60
37
51
62
61
69
3
49
49c
64
65
45
4
49
49c
64
65
45
4
80
49
49c
64a
65
45
4a
47a
64d
49
49c
64b
64c
66
67
65
45
44a
26a
44b
26c
26b
55
37
37
6
38a
25
38
39
12
35
6
38a
25
38
TM026497

CR 16

50/60 Hz, Models A, B

Chamber stack complete

Consists of items: 3a, 4, 4a, 44, 47a, 49, 51, 61, 64, 64a, 64c, 64d, 66, 69	Kit No	Kit No
Number of stages	Ceramic bearings	Bronze bearings
2	*335065*	*335190*
3	*335066*	*335191*
4	*335067*	*335192*
5	*335068*	*335193*
6	*335069*	*335194*
7	*335070*	*335195*
8	*335071*	*335196*
10	*335072*	*335197*
12	*335073*	*335198*
14	*335074*	*335199*
16	*335075*	*335200*

Coupling complete

Motor/pump shaft diameter [mm]	Kit No
24/16	*339124*
28/16	*339128*
38/16	*339138*
42/16	*339142*
28.6/16	*425261*
34.9/16, NEMA	*425262*
41.3/16, NEMA	*425263*

Content

Pos.		Quantity
	Coupling half	2
9	Screw	4
10	Pin	1

Shaft seal

Pos.	Description	AUUE/V	AUUE/V	AUUE	BUBE	BUBV	RUUE/V	RUUK	AUUK	AUAK	BQQE	BQQV
	Kit No	*985204*	*425085*	*985874*	*425062*	*425063*	*985838*	*985829*	*985828*	*985834*	*425763*	*425762*
37	Sleeve gasket	2	-	-	2	2	2	2	2	2	2	2
37	Vulcanised sleeve gaskets (NBR)	-	2	-	-	-	-	-	-	-	-	-
37	Vulcanised sleeve gaskets (EPDM)	-	-	2	-	-	-	-	-	-	-	-
105	Shaft seal	1	1	1	1	1	1	1	1	1	1	1

Wear parts

Pos.	Number of stages	2-6	7-10	12-16	2-6	7-10	12-16
	Description	Ceramic bearings			Bronze bearings		
	Kit No	*335078*	*335079*	*335080*	*335300*	*335301*	*335302*
4a	Bearing chamber	1	2	3	1	2	3
37	Sleeve gasket	2	2	2	2	2	2
38	Drain plug gasket [1]	1	1	1	1	1	1
39	Flange gasket	2	2	2	2	2	2
45	Neck ring	5	8	13	5	8	13
47a	Bearing ring	1	2	3	1	2	3
49c	Wear ring	6	10	16	6	10	16
57	O-ring for drain plug [1]	1	1	1	1	1	1
61	Spacer for shaft seal	1	1	1	1	1	1
62	Stop ring	1	1	1	1	1	1
64c	Spacer	1	1	1	1	1	1
65	Neck ring retainer	5	8	13	5	8	13
66	Spring washer	1	1	1	1	1	1
67	Lock nut	1	1	1	1	1	1
100	O-ring [1]	1	1	1	1	1	1

[1] EPDM and FKM

CR 16

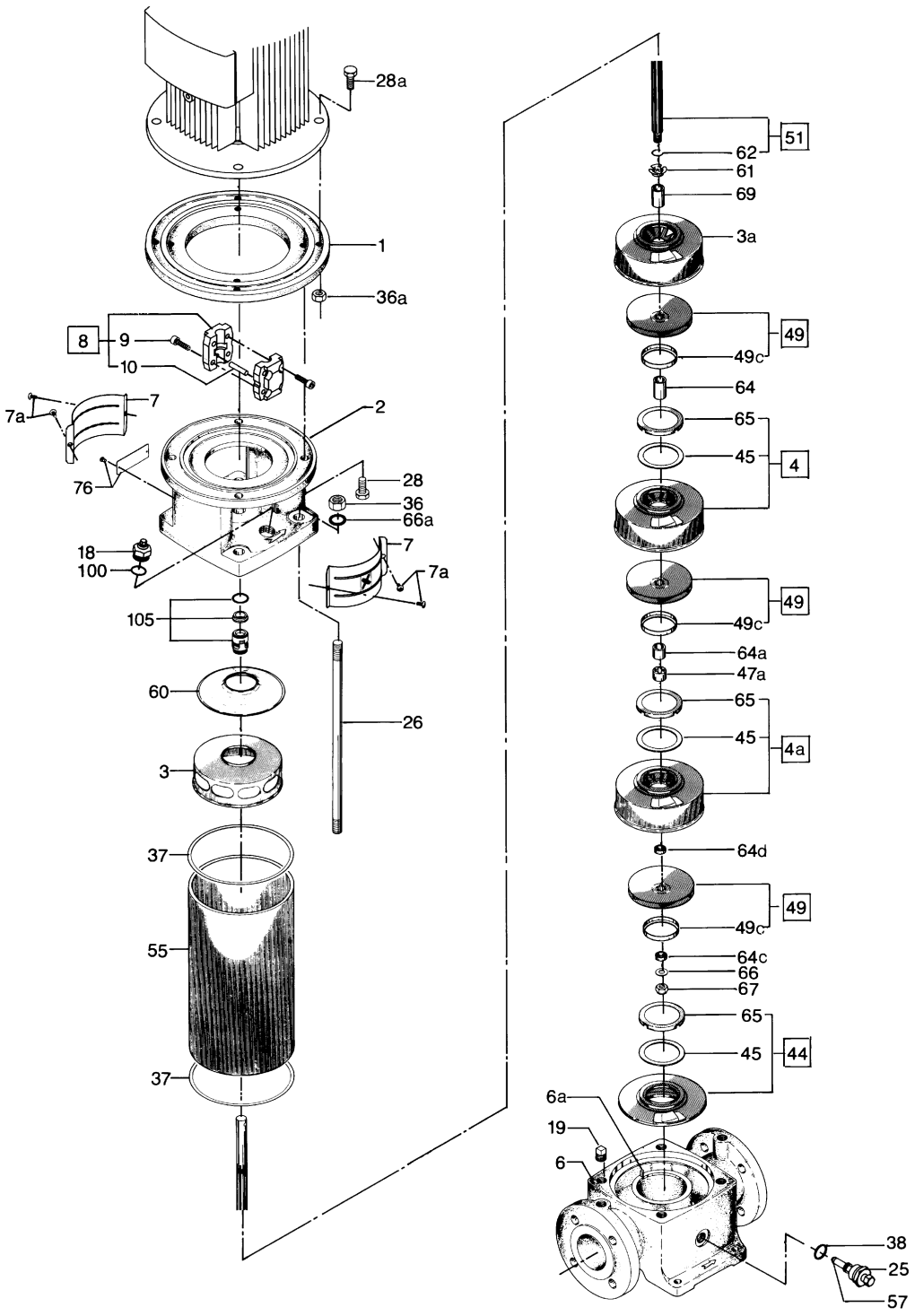
28a
1
36a
8
9
10
7
7a
2
76
28
36
66a
18
100
7
7a
105
60
26
3
37
55
37
51
62
61
69
3a
49
49c
64
65
45
4
49
49c
64a
47a
65
45
4a
64d
49
49c
64c
66
67
65
45
44
6a
19
6
38
25
57
TM002360

CR, CRI, CRN 20
50/60 Hz

Coupling guard

Description	Kit No
MG 71 - 80	*96509611*
MG 90 - 100, 56C	*96509612*
MG 132, 182TC - 215TC	*96509613*
MG 132, 182TC - 215TC	*96509614*

Content

Pos.	Description	Quantity
7	Coupling guard	2
7a	Screw	4

Plug

Pos.	Description	CR	CRI, CRN	CR NEMA	CRI, CRN NEMA
	Kit No	***96511311***	***96511312***	***96511313***	***96511314***
18	**Air vent screw**	**1**	**1**	**1**	**1**
23	Pipe plug	1	1	1	1
23a	Pipe plug 1/4”	-	-	1	1
25	Drain plug	1	1	1	1
38	O-ring EPDM + FKM	1 + 1	1 + 1	1 + 1	1 + 1
38a	O-ring EPDM + FKM	1 + 1	1 + 1	1 + 1	1 + 1
100	O-ring EPDM + FKM	2 + 2	2 + 2	2 + 2	2 + 2

Shaft seal

Description	Kit No
HQQE	*96511844*
HQQV	*96511845*
HQQK	*96511846*
HQQF	*96511847*
HQBE	*96511848*
HQBV	*96511849*
HUBE	*96511836*
HUBV	*96511837*
HUBK	*96511838*
HUBF	*96511839*
HUUE	*96511840*
HUUV	*96511841*
HUUK	*96511842*
HUUF	*96511843*

Content

Pos.	Description	Quantity
105	Shaft seal	1
	Adjusting fork	1

Wear parts

Pos.	Bearings	Kit No		
	Silicon carbide	***96511824***	***96511827***	***96511830***
	Bronze	***96511825***	***96511828***	***96511831***
	Carbon graphite	***96511826***	***96511829***	***96511832***
	Description/stages	**-6**	**-10**	**-17**
4a	Chamber with bearing	1	2	3
26b	Screw	2	2	2
26c	Washer	2	2	2
45	Neck ring	5	8	14
47a	Bearing ring rotating	1	2	3
49c	Impeller wear ring	6	10	17
61	Seal driver	1	1	1
62	Stop ring	1	1	1
64a	Spacing pipe	1	2	3
64b	Spacing pipe	1	1	1
64c	Spacer lower	1	1	1
64d	Spacing pipe	1	2	3
65	Neck ring retainer	5	8	14
66	Lock washer	1	1	1
67	Lock nut	1	1	1

CRI/N

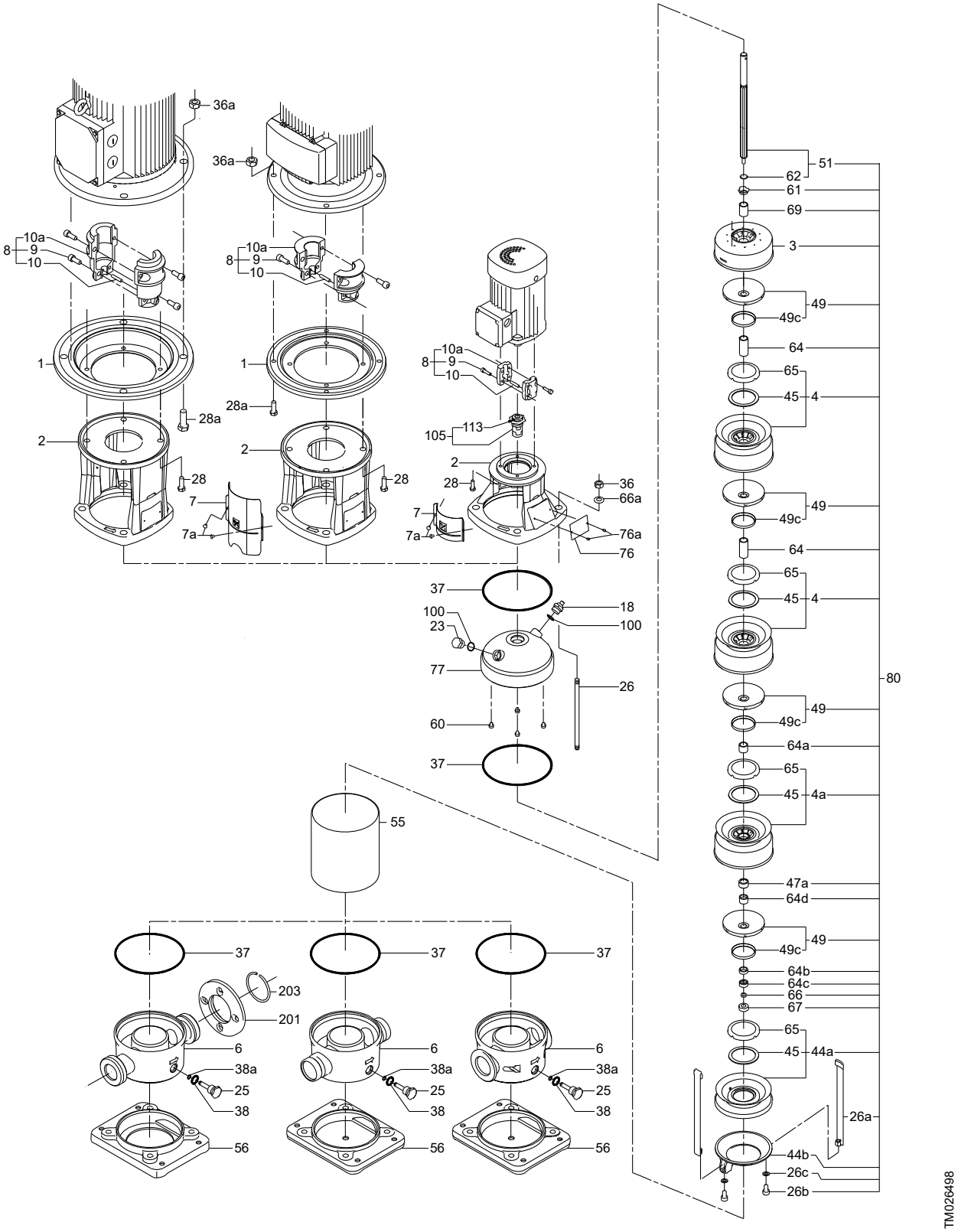
36a
10a
8
9
10
1
28a
2
28
7
7a
105
113
36
66a
76a
76
37
100
18
23
77
26
60
55
203
201
6
38a
25
38
56
51
62
61
69
3
49
49c
64
65
45
4
64a
4a
47a
64d
64b
64c
66
67
44a
26a
44b
26c
26b
80
TM026498

CR

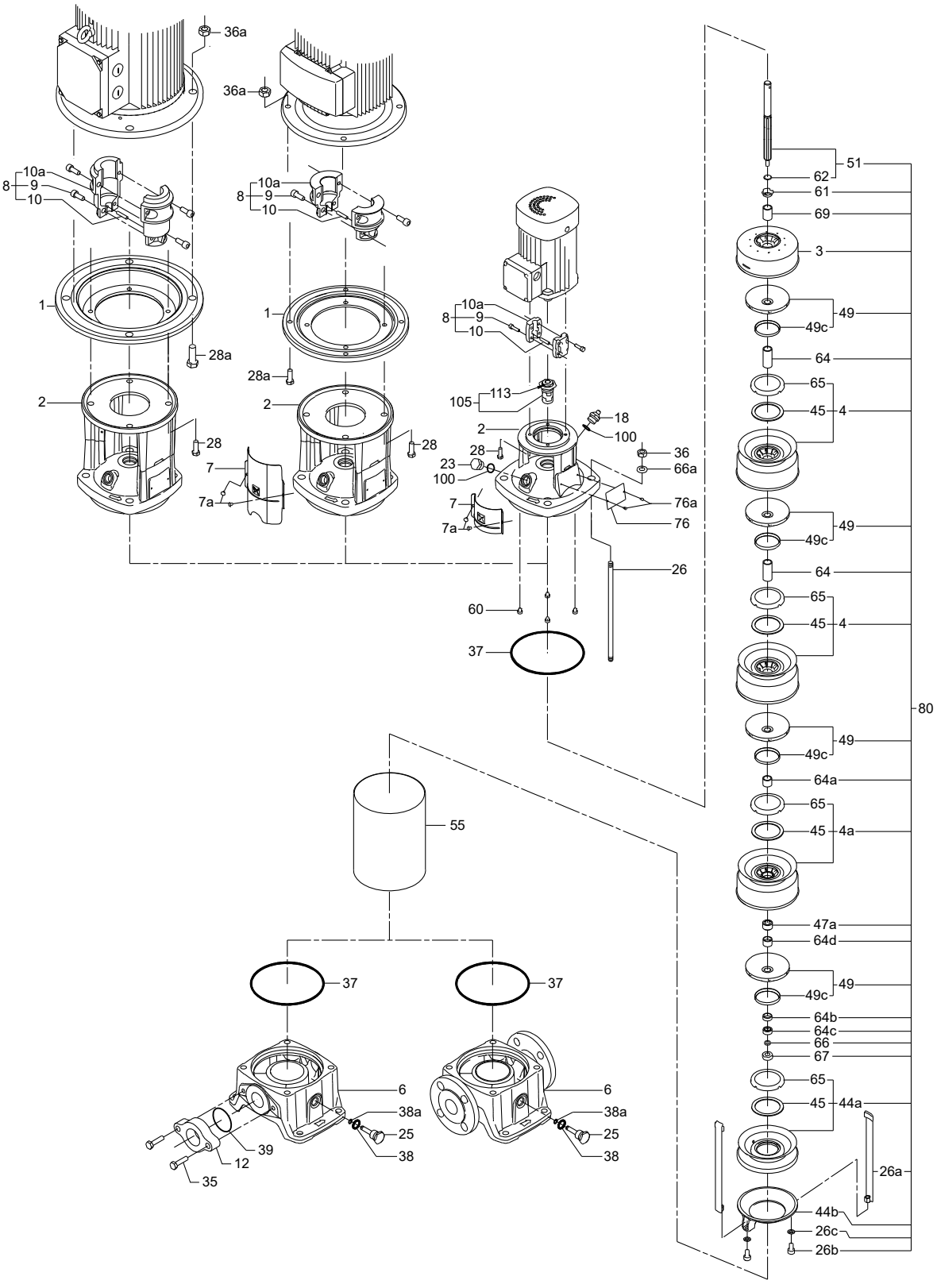
36a
36a
10a
8
9
10
10a
8
9
10
1
1
28a
28a
2
2
28
28
7
7a
10a
8
9
10
105
113
18
2
100
28
36
23
66a
100
7
76a
7a
76
26
60
37
51
62
61
69
3
49
49c
64
65
45
4
49
49c
64
65
45
4
80
49
49c
64a
65
45
4a
47a
64d
49
49c
64b
64c
66
67
65
45
44a
26a
44b
26c
26b
55
37
37
6
38a
25
38
39
12
35
6
38a
25
38
TM026497

Chamber stack complete (silicon carbide bearing)

Pos.	Pump type	CR	CRI	CRN
	Number of stages	Kit No	Kit No	Kit No
80	1	*96508541*	*96491772*	*96491784*
	2	*96508542*	*96491773*	*96491785*
	3	*96508543*	*96491774*	*96491786*
	4	*96508544*	*96491775*	*96491787*
	5	*96508545*	*96491776*	*96491788*
	6	*96508546*	*96491777*	*96491789*
	7	*96508547*	*96491778*	*96491790*
	8	*96508548*	*96491779*	*96491791*
	10	*96508550*	*96491780*	*96491792*
	12	*96508551*	*96491781*	*96491793*
	14	*96508552*	*96491782*	*96491794*
	17	*96508553*	*96491783*	*96491795*

Coupling complete

Pos.		Kit No	*96511315*	*96511317*	*96511319*	*96511350*	*96511351*
		Motor/pump shaft diameter [mm]	14/16	19/16	24/16	28/16	3816
		Description					
8	9	Screw	4	4	4	4	4
	10	Pin	1	1	1	1	1
	10a	Coupling half	2	2	2	2	2

Pos.		Kit No	*96511352*	*96511353*	*96511354*	*96511355*	*96511356*
		Motor/pump shaft diameter [mm]	42/16	15.9/16	28.6/16	34.9/16	41.3/16
		Description		NEMA	NEMA	NEMA	NEMA
8	9	Screw		4	4	4	4
	10	Pin	1	1	1	1	1
	10a	Coupling half	2	2	2	2	2

Seal kit

Pos.	Description	EPDM	FKM
	Kit No	*96509609*	*96509610*
37	O-ring	2	2
38	O-ring	1	1
38a	O-ring	1	1
39	Gasket, oval flange, CR 10	2	2
	O-ring 90 x 3, oval flange, CR 15/20	2	2
	Gasket, FGJ flange, CR 10	2	2
	Gasket, FGJ flange, CR 15/20	2	2
60	Rubber spring	4	4
100	O-ring	2	2

CRI/N

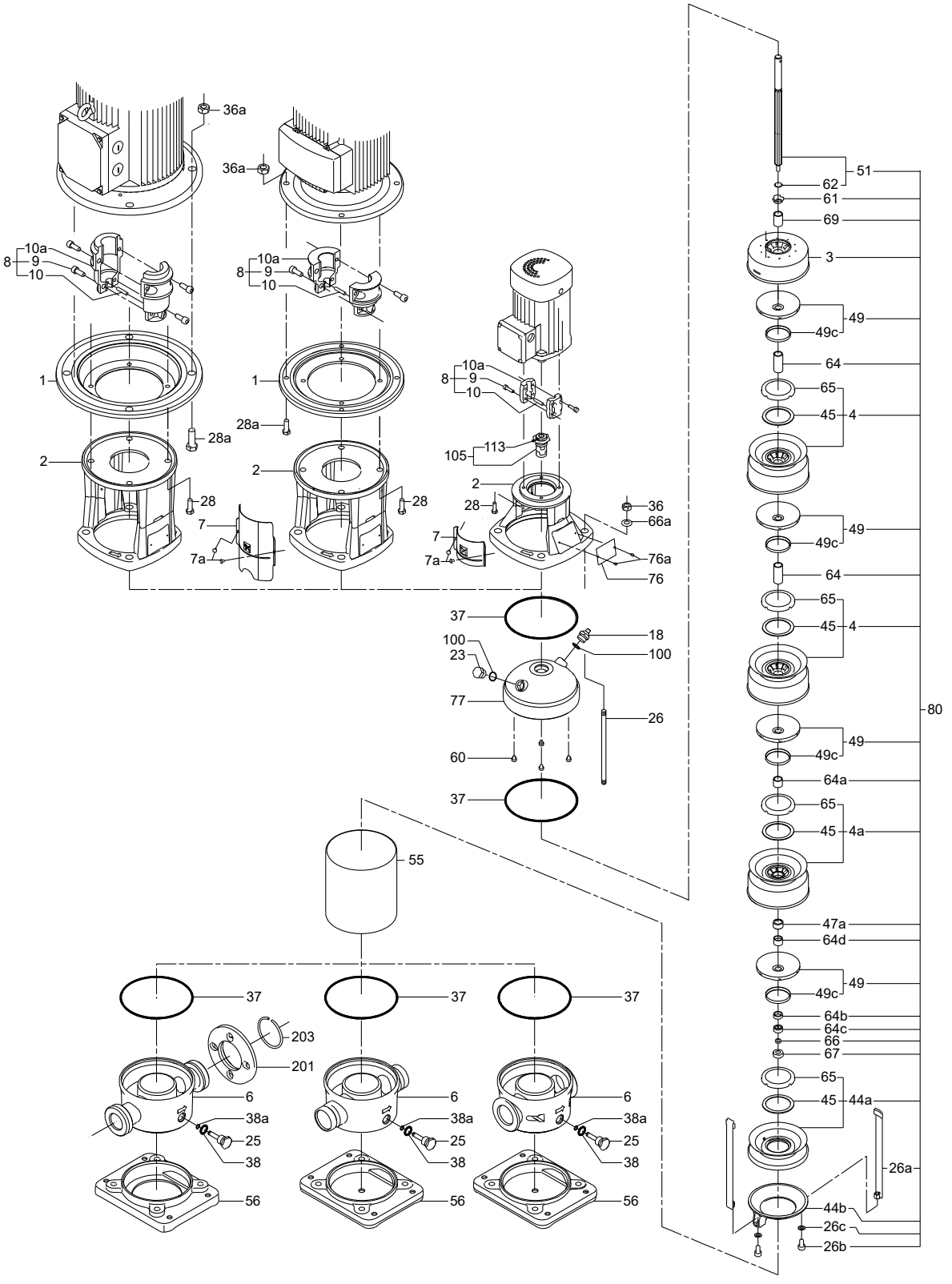
36a
10a
8
9
10
1
28a
2
28
7
7a
105
113
36
66a
76a
76
37
100
18
23
77
26
60
55
203
201
6
38a
25
38
56
51
62
61
69
3
49
49c
64
65
45
4
64a
4a
47a
64d
64b
64c
66
67
44a
26a
44b
26c
26b
80
TM026498

CR

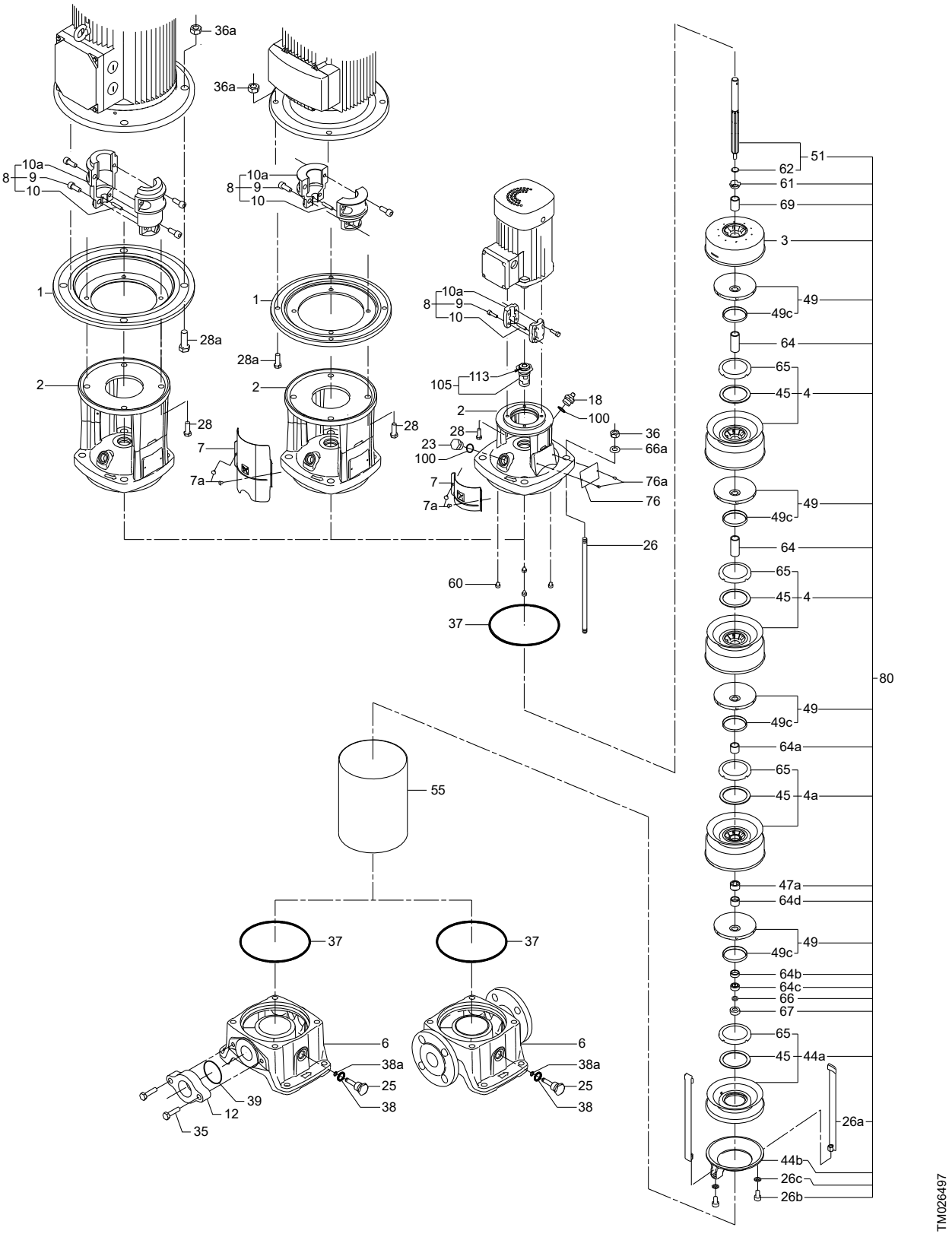
36a
36a
10a
8
9
10
10a
8
9
10
1
1
28a
28a
2
2
28
28
7
7a
10a
8
9
10
105
113
2
18
100
28
23
100
36
66a
7
7a
76a
76
26
60
37
51
62
61
69
3
49
49c
64
65
45
4
49
49c
64
65
45
4
80
49
49c
64a
65
45
4a
47a
64d
49
49c
64b
64c
66
67
65
45
44a
26a
44b
26c
26b
55
37
37
6
38a
25
38
39
12
35
6
38a
25
38
TM026497

CR 30

50/60 Hz, Model A

Shaft seal and wear parts

Pos.	Kit No	*345015*	*985426*	*985436*	*985439*
		AUUE/V	AUUE/V	[1]	Seal carrier
	Description				
29	Screw		-	2	2
37	Sleeve gasket	2	-	2	-
38	Drain plug gasket	1	-	1	-
45	Neck ring	-	-	-	-
46	Top intermediate bearing	-	-	-	-
47	Bearing	-	-	-	-
48	Split cone nut	-	-	-	-
49b	Split cone	-	-	-	-
49c	Ring for impeller	-	-	-	-
57	O-ring for drain plug [2]	1	-	1	-
58	Seal carrier	-	-	1	1
58a	Screw	4	-	4	4
59	Disc for O-ring	-	-	1	1
61	Spacer ring	-	-	1	-
102	O-ring [2]	1	1	1	-
103	Upper seal ring	1	1	1	-
104	Lower seal ring	1	1	1	-
105	Shaft seal	-	-	-	-
106	Spring cup	1	1	1	-
107	O-ring [2]	1	1	1	-
108	Spring	1	-	1	-
109	O-ring [2]	1	1	1	-
111	Upper seal driver	1	-	1	-
112	Lower seal driver	1	-	1	-
113	Screw	2	-	2	-

1 Conversion shaft seal kit prior to serial number 7447.

2 EPDM and FKM.

CR 30, Model A

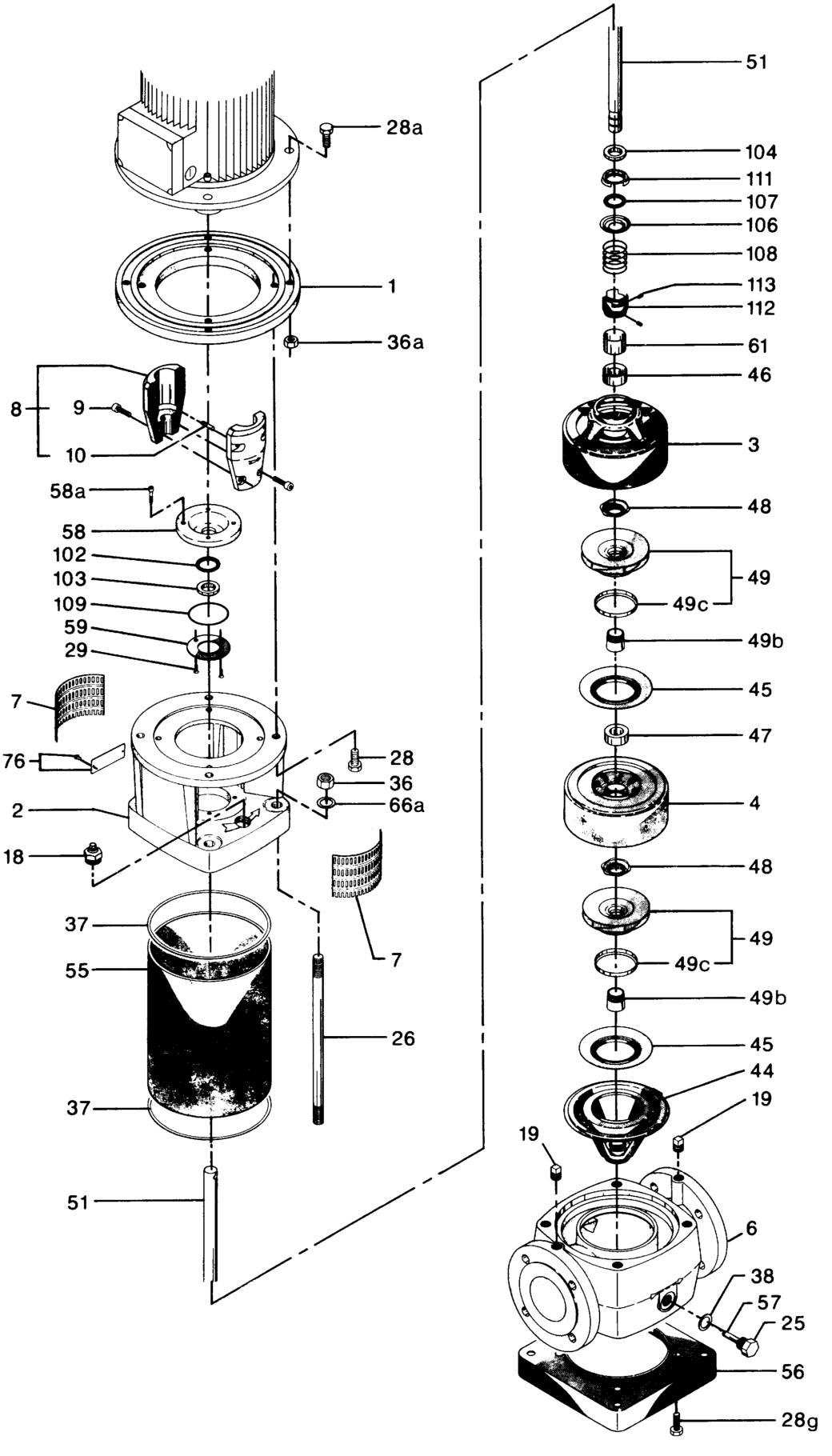

TM002218

50/60 Hz, Model B

Chamber stack complete

Consists of items: 3, 4, 4a, 44, 47a, 49, 51, 61, 64, 64a, 64b, 64c, 66, 67, 69	Kit No	Kit No
Number of stages	Ceramic bearings	Bronze bearings
1	*345144*	*345244*
2	*345145*	*345245*
3	*345146*	*345246*
4	*345147*	*345247*
5	*345148*	*345248*
8/6	*345149*	*345249*
8/7	*345150*	*345250*
8	*345151*	*345251*
11/9	*345152*	*345252*
11/10	*345153*	*345253*
11	*345154*	*345254*
13/12	*345155*	*345255*
13	*345156*	*345256*
16/14	*345157*	*345257*
16/15	*345158*	*345258*
16	*345159*	*345259*

Coupling complete

Pos.							NEMA	NEMA	NEMA	NEMA
	Kit No	***345106***	***345107***	***345108***	***345109***	***345110***	***345231***	***485140***	***345232***	***485160***
	Motor/pump shaft diameter [mm]	**24/22**	**28/22**	**38/22**	**42/22**	**48/22**	**28.6/22**	**34.9/22**	**41.3/22**	**41.3/22**
	Description / stages						**1**	**2-3**	**4-5**	**6-10**
	Coupling half	2	2	2	2	2	2	2	2	2
9	Screw	4	4	4	4	4	4	4	4	4
10	Pin	1	1	1	1	1	1	1	1	1

Shaft seal

Pos.	Kit No	***345122***	***345180***	***345181***	***345237***	***985910***
	Description	**AUUE/V**	**BBUE**	**BBUV**	**RUUE/V**	**AUUK**
37	Sleeve gasket	2	2	2	-	-
37	FFKM sleeve gasket	-	-	-	-	2
105	Shaft seal	1	1	1	1	1
109	O-ring	1 [1]	1	1	1 [1]	1 [2]

1 EPDM and FKM.

2 FFKM.

Wear parts

Pos.	Kit No	345199	345200	345201	345202	345203	345211	345212	345213	345214	345215
	Number of stages	**1-5**	**6-8**	**9-11**	**12-13**	**14-16**	**1-5**	**6-8**	**9-11**	**12-13**	**14-16**
	Description	**Ceramic bearings**					**Bronze bearings**				
4a	Bearing chamber	1	2	2	2	2	1	2	2	2	2
37	Sleeve gasket	2	2	2	2	2	2	2	2	2	2
38	Drain plug gasket [1]	1	1	1	1	1	1	1	1	1	1
39	Flange gasket	1	1	1	1	1	1	1	1	1	1
45	Neck ring	5	8	11	13	16	5	8	11	13	16
47a	Bearing ring	1	2	2	2	2	1	2	2	2	2
49c	Ring for impeller	5	8	11	13	16	5	8	11	13	16
57	O-ring for drain plug [1]	1	1	1	1	1	1	1	1	1	1
62	Stop ring	1	1	1	1	1	1	1	1	1	1
64c	Spacer	1	1	1	1	1	1	1	1	1	1
66	Spring washer	1	1	1	1	1	1	1	1	1	1
67	Lock nut	1	1	1	1	1	1	1	1	1	1
100	O-ring [1]	1	1	1	1	1	1	1	1	1	1
Same wear parts, but without pos. 4a, bearing chamber, and pos. 47a, bearing ring.		345194	345195	345196	345197	345198	-	-	-	-	-

[1] EPDM and FKM.

CR 30, Model B

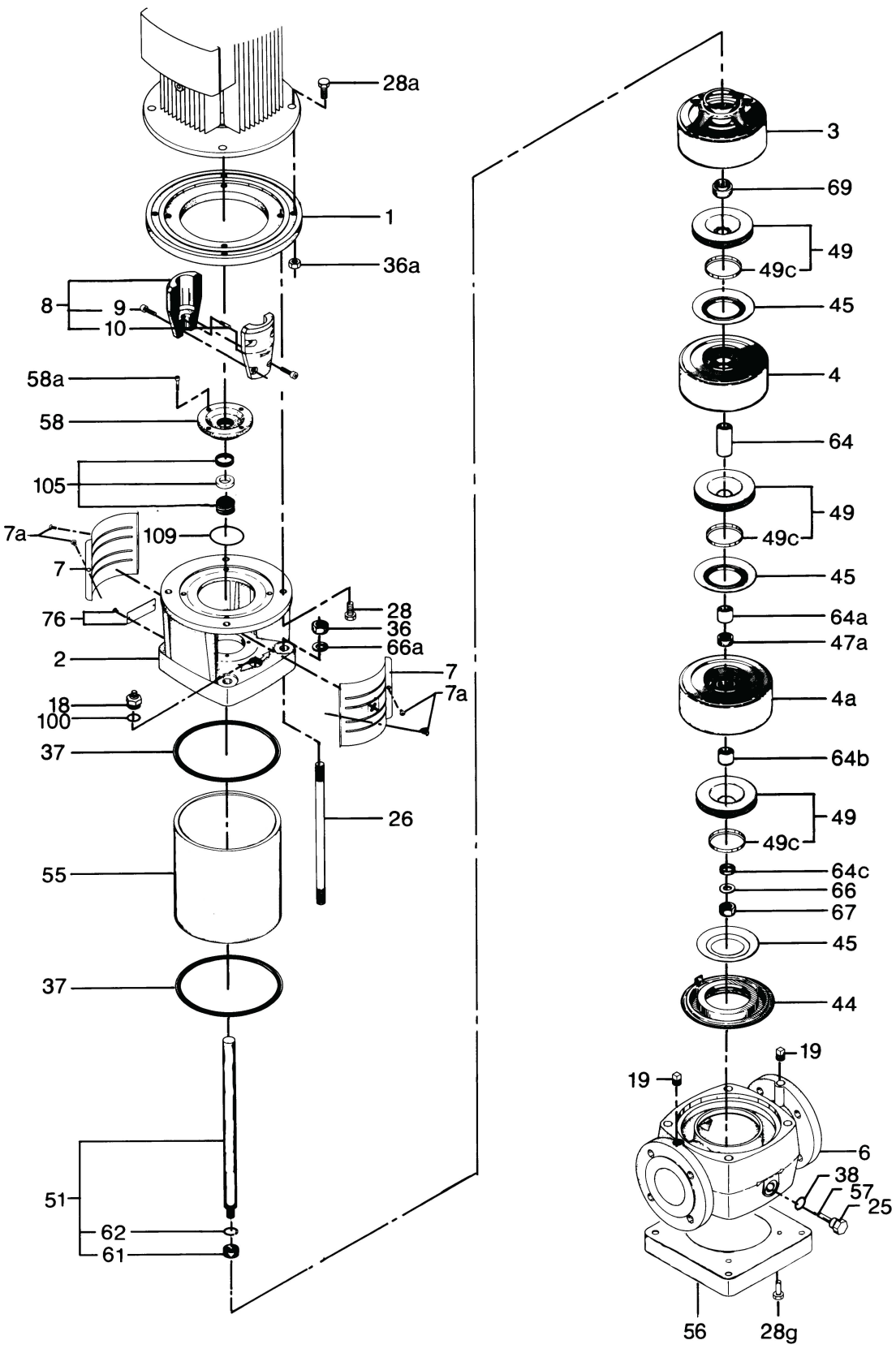
28a
1
36a
8
9
10
58a
58
105
7a
109
7
76
2
18
100
37
55
37
51
62
61
28
36
66a
7
7a
26
3
69
49
49c
45
4
64
49
49c
45
64a
47a
4a
64b
49
49c
64c
66
67
45
44
19
19
6
38
57
25
56
28g
TM002216

CRN 30

50/60 Hz, Model A

Chamber stack complete

Consists of items: 3, 4, 4a, 44, 47a, 49, 51, 61, 64, 64a, 64b, 64c, 66, 67, 69	Kit No
Number of stages	Ceramic bearings
1	*345160*
2	*345161*
3	*345162*
4	*345163*
5	*345164*
8/6	*345165*
8/7	*345166*
8	*345167*
11/9	*345168*
11/10	*345169*
11	*345170*
13/12	*345171*
13	*345172*
16/14	*345173*
16/15	*345174*
16	*345175*

Shaft seal

Pos.	Kit No	*345111*	*345210*	*345182*	*345208*	*345183*	*345209*	*345237*	*985910*
	Description	AUUE/V	AUUE/V	BBUE	BBUE	BBUV	BBUV	RUUE/V	AUUK
37	Vulcanised sleeve gasket	-	2	-	2	-	2	-	-
37	FFKM sleeve gasket	-	-	-	-	-	-	-	2
78	Rubber bush	1	1	1	1	1	1	1	-
100	O-ring [1]	1	1	1	1	1	1	1 [1]	-
105	Shaft seal	1	1	1	1	1	1	1	1
109	O-ring [1]	1	1	1	1	1	1	1 [1]	1 [2]

1 EPDM and FKM.

2 FFKM.

Wear parts

Pos.	Kit No	*345189*	*345190*	*345192*	*345193*
	Number of stages	1-5	6-8	12-13	14-16
	Description	Ceramic bearings			
4a	Bearing chamber	1	2	2	2
37	Sleeve gasket	2	2	2	2
38	Drain plug gasket [1]	1	1	1	1
39	Flange gasket	1	1	1	1
45	Neck ring	5	8	13	16
47a	Bearing ring	1	2	2	2
49c	Ring for impeller	5	8	13	16
57	O-ring for drain plug [1]	1	1	1	1
62	Stop ring	1	1	1	1
64c	Spacer	1	1	1	1
66	Spring washer	1	1	1	1
67	Lock nut	1	1	1	1
Same wear parts, but without pos. 4a and 47a.		*345184*	*345185*	*345187*	*345188*

1 EPDM and FKM.

CRN 30, Model A

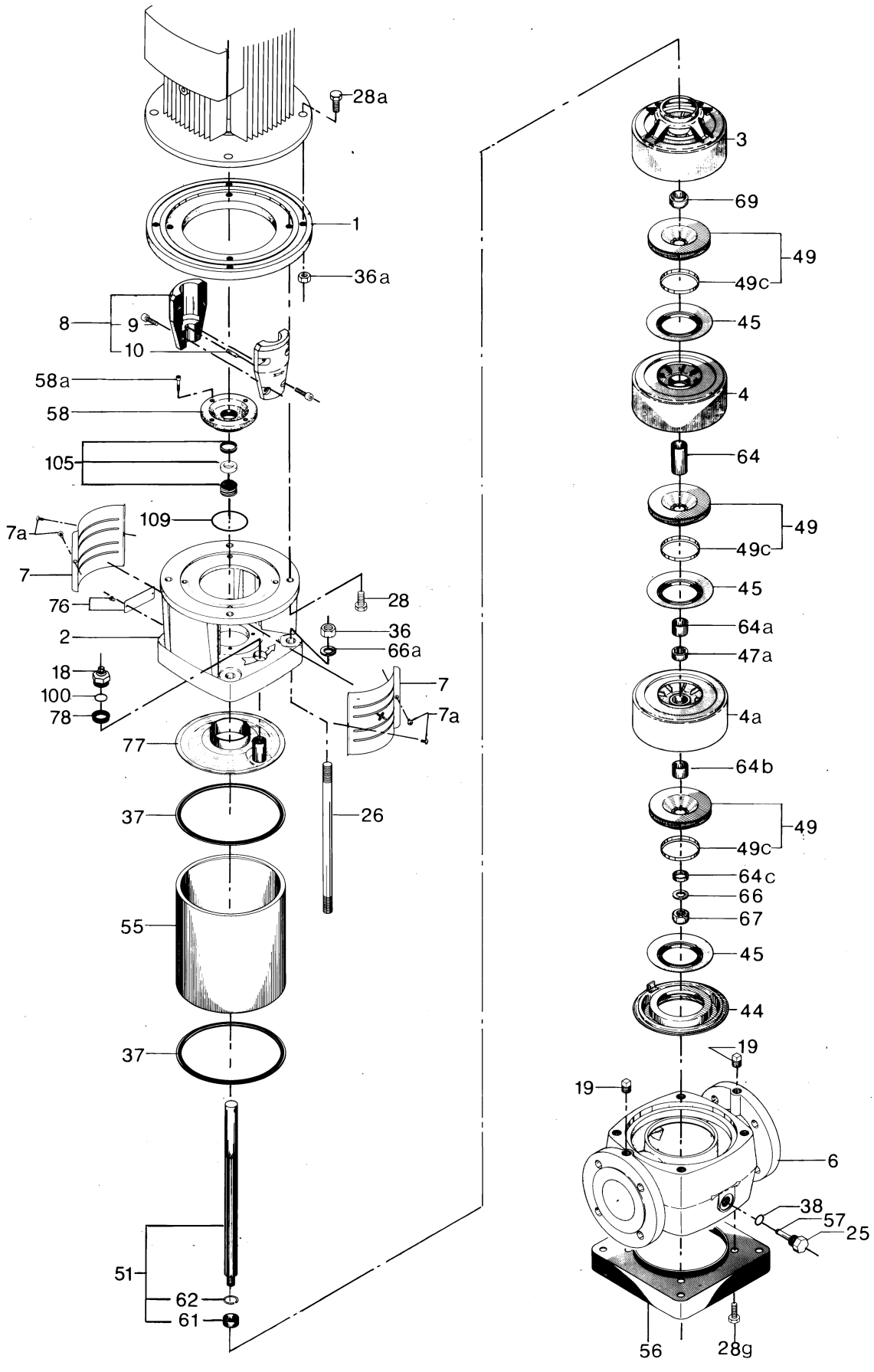

CR, CRN 32
50/60 Hz

Bearing

Pos.	Kit No	96416574	96416576
	Description	3-7	8-14
47a	Bearing	1	2
-	Adjusting fork	1	1

Bottom bearing

Pos.	Kit No	96416580
	Description	1-14
6g	Bearing ring (stationary)	1
31	Hexagon socket head screw	1
32	Washer	1
47b	Bearing ring (rotating)	1
66	Washer	1
66b	Lock washer	1
67	Hexagon socket head screw	1
D + E	Puller complete	1

O-ring

Description	Kit No
EPDM	96416597
FKM	96416598

Content

Pos.	Description	Quantity
37	O-ring	2
38	O-ring	4
60	Spring (rubber)	4
100	O-ring	2
109	O-ring	1
110	O-ring	1
-	Adjusting fork (shaft seal)	1

Shaft seal

Description	Kit No
HQQE	96525458
HQQV	96525490
HQQK	96533369
HQQF	96533412
HQBE	96525457
HQBV	96525459
HUBK	96533365
HUBF	96533366
HUUE	96436727
HUUV	96436728
HUUK	96533367
HUUF	96533368

Content

Pos.	Description	Quantity
105	Shaft seal	1

Wear parts

Pos.	Kit No	96416728	96416729	96416730	96416731
	Description	1-2	3-7	8-11	12-14
45	Neck ring	2	7	11	14
47	Bearing (carbon-filled PTFE)	-	1	2	2
47	Bearing (bronze)	-	1	2	2
47c	Sleeve	2	6	9	11
47d	Lock ring	2	7	11	14
49c	Wear ring	2	7	11	14
65	Seal carrier	2	7	11	14
-	Adjusting fork	1	1	1	1

CR, CRN 32

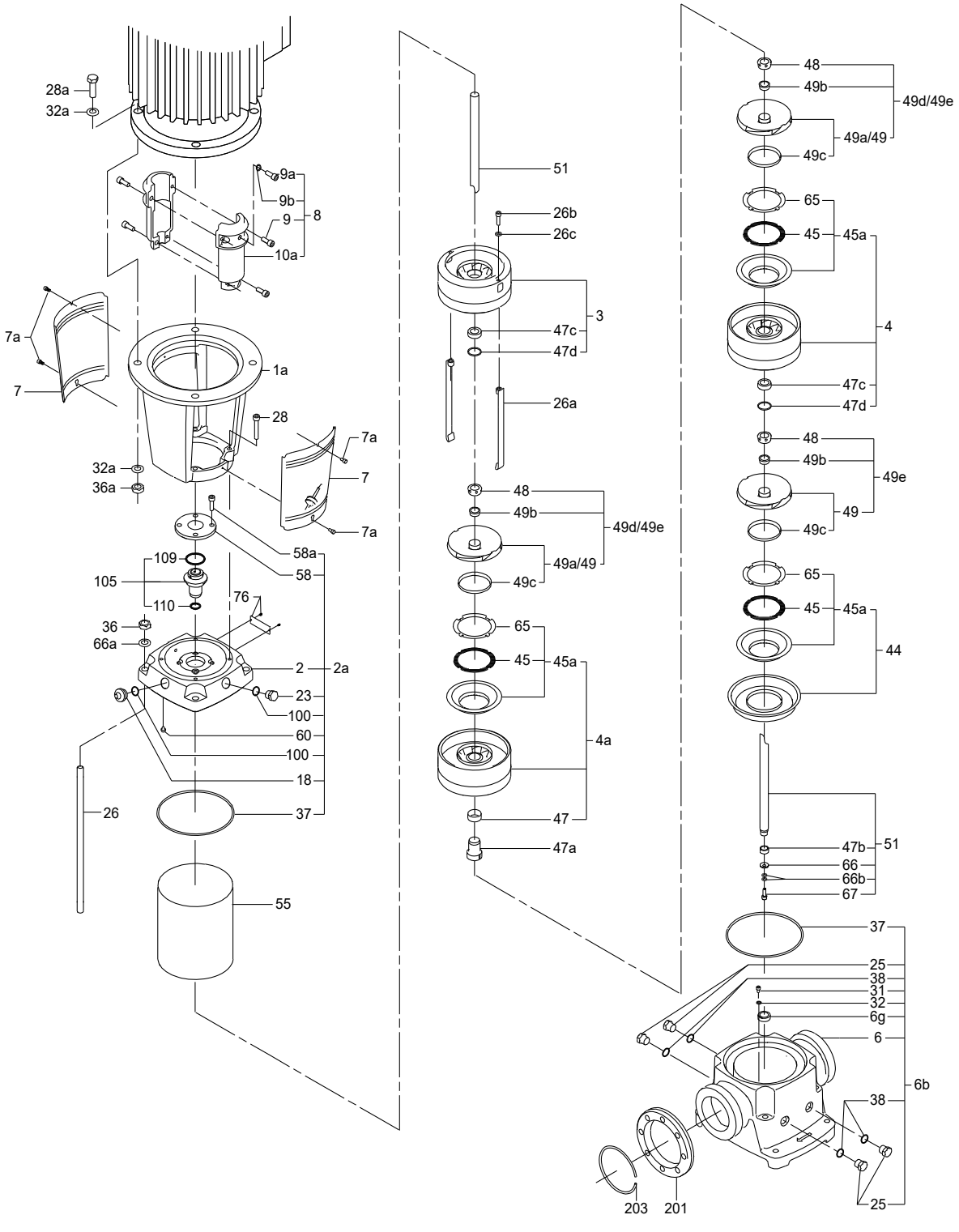
28a
32a
9a
9b
9
8
10a
7a
7
1a
28
32a
36a
7a
7
7a
58a
58
109
105
110
76
36
66a
2
2a
23
100
60
100
18
26
37
55
51
26b
26c
3
47c
47d
26a
48
49b
49d/49e
49a/49
49c
65
45
45a
4a
47
47a
48
49b
49d/49e
49a/49
49c
65
45
45a
4
47c
47d
48
49b
49e
49
49c
65
45
45a
44
47b
51
66
66b
67
37
25
38
31
32
6g
6
6b
38
25
203
201
TM022299

Coupling complete

Pos.	Kit No	96416589	96416590	96416591	96416592	96416593	96416594	96475477	96475478
	Motor/pump shaft diameter [mm]	24/22	28/22	38/22	42/22	48/22	55/22	42/22	48/22
	Description							For shafts with key and keyway	
10a	Coupling half	2	2	2	2	2	2	2	2
9	Hexagon socket head screw	4	4	4	4	4	4	4	4
9a	Hexagon socket head screw	-	-	-	-	-	-	1	1
9b	Washer	-	-	-	-	-	-	1	1
	Adjusting fork	1	1	1	1	1	1	1	1

Coupling complete NEMA

Motor/pump shaft diameter	Kit No
28.6/22	96417000
34.9/22	96417001
41.2/22	96417004
47.6/22	96417020

Content

Pos.	Description	Quantity
10a	Coupling half	2
9	Hexagon socket head screw	4
-	Adjusting fork	1

Coupling guard

Pos.	Kit No	96505134	96505135
	Description	MG 90 - MG 132	MG 160 - MG 225
7	Coupling guard	2	2
7a	Screw	4	4

Chamber stack complete

Pumptype	CRN 32	CR 32
32-1-1	96416290	96416273
32-1	96416291	96416274
32-2-2	96416918	96416905
32-2-1	96416292	96416275
32-2	96416293	96416276
32-3-2	96416919	96416906
32-3	96416294	96416277
32-4-2	96416920	96416907
32-4	96416295	96416278
32-5-2	96416921	96416908
32-5	96416296	96416279
32-6-2	96416922	96416909
32-6	96416297	96416280
32-7-2	96416923	96416910
32-7	96416298	96416281
32-8-2	96416924	96416911
32-8	96416299	96416282
32-9-2	96416925	96416912
32-9	96416300	96416283
32-10-2	96416926	96416913
32-10	96416301	96416284
32-11-2	96416927	96416914
32-11	96416302	96416285
32-12-2	96416928	96416915
32-12	96416303	96416286

Pumptype	CRN 32	CR 32
32-13-2	96416929	96416916
32-13	96416304	96416287
32-14-2	96416930	96416917
32-14	96416305	96416288

Content

Pos.	Description	Quantity
	Rotating unit	1

Plug

Pos.	Kit No	96505136
	Description	EPDM/FKM
18	Air vent screw	1
23	Pipe plug	1
25	Pipe plug	4
38	O-ring 16.3 x 2.4	4
100	O-ring 16.3 x 2.4	2

CR, CRN 32

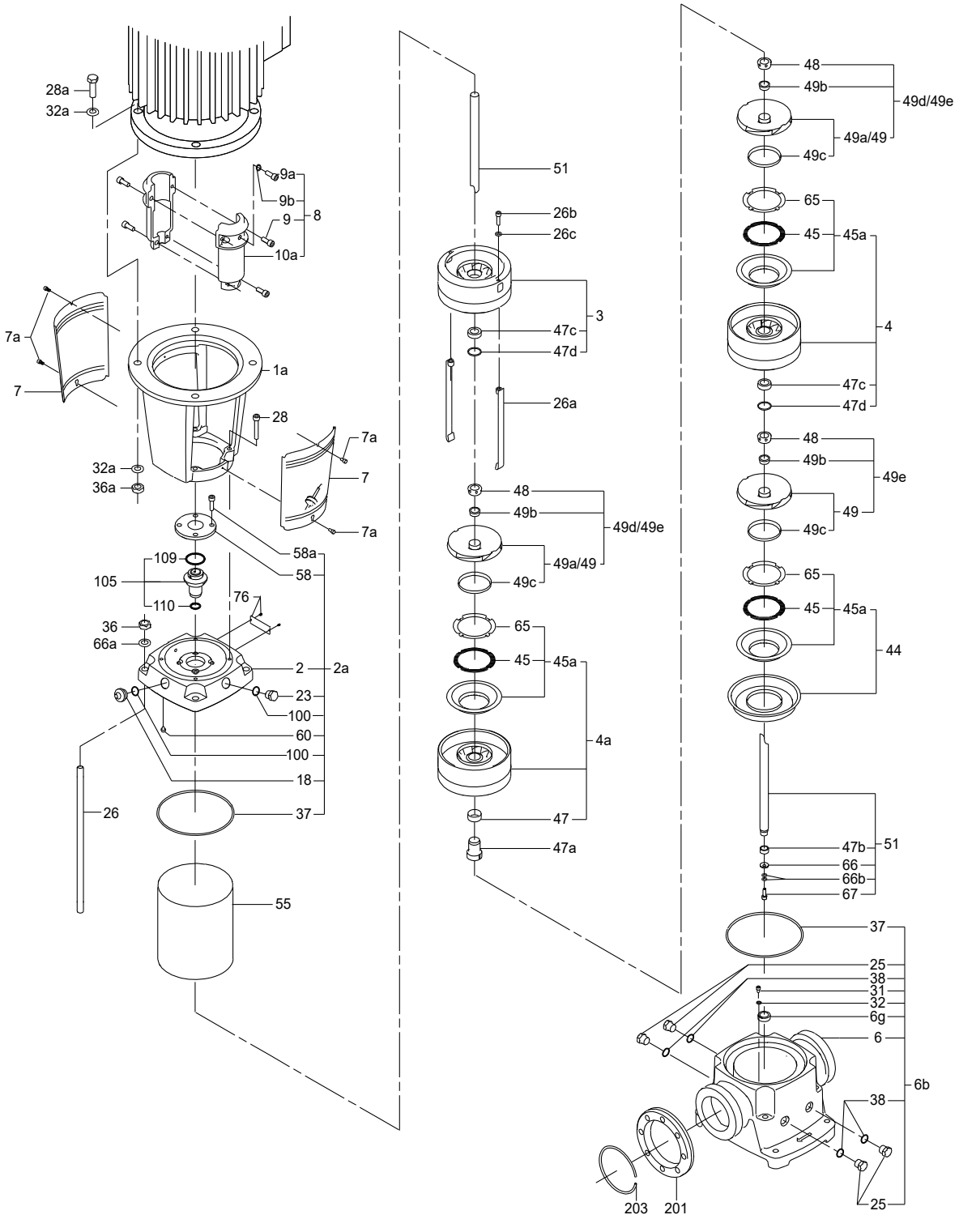
28a
32a
9a
9b
9
8
10a
7a
7
1a
28
32a
36a
7a
7
7a
58a
58
109
105
110
76
36
66a
2
2a
23
100
60
100
18
26
37
55
51
26b
26c
3
47c
47d
26a
48
49b
49d/49e
49a/49
49c
65
45
45a
4a
47
47a
48
49b
49d/49e
49a/49
49c
65
45
45a
4
47c
47d
48
49b
49e
49
49c
65
45
45a
44
47b
51
66
66b
67
37
25
38
31
32
6g
6
6b
38
25
203
201
TM022299

CR, CRN 32, model B

Chamber with bearing

Type	Kit No	
	CR	CRN
SIC/SIC	*98497462*	*98633738*
Graflon/HM	*98497463*	*98633739*
Bronze/HM	*98497464*	*98633751*

Content

Pos.		Quantity
4a	Chamber cpl.	1
47a	Rotating bearing	1

Impeller

Name	Kit No	
	CR	CRN
32	*98497465*	*98633780*

Content

Pos.	Description	Quantity
49	Impeller	1
48	Nut	1
48	Nut with slot	1
49b	Split cone	1

Impeller reduced

Name	Kit No	
	CR	CRN
32	*98633832*	*98633836*

Content

Pos.	Description	Quantity
49	Impeller	1
48	Nut	1
48	Nut with slot	1
49b	Split cone	1

Inlet part

Type	Kit No	
	CR	CRN
-	*98633883*	*98633886*

Content

Pos.	Description	Quantity
44	Inlet part cpl.	1

Upper chamber with bearing

Type	Kit No	
	CR	CRN
SIC/SIC	*98633752*	*98633758*
Graflon/HM	*98633754*	*98633759*
Bronze/HM	*98633756*	*98633777*

Content

Pos.	Description	Quantity
3	Upper chamber with bearing	1
47a	Rotating bearing	1

Spare chamber

Type	Kit No	
	CR	CRN
Graflon	*98497466*	*98633840*
Teflon	*98497467*	*98633862*
Bronze	*98497468*	*98497468*

Content

Pos.	Description	Quantity
4	chamber with bush	1

Spare upper chamber

Type	Kit No	
	CR	CRN
Graflon	*98633863*	*98633870*
Teflon	*98633867*	*98633882*
Bronze	*98633868*	*98633868*

Content

Pos.	Description	Quantity
3	Upper chamber with bush	1

Wear parts

Type		Kit No
graflon	1-2	*98497130*
	3-7	*98497451*
	8-11	*98497452*
	12-14	*98497453*
teflon	1-2	*98497454*
	3-7	*98497455*
	8-11	*98497456*
	12-14	*98497457*
bronze	1-2	*98497458*
	3-7	*98497459*
	8-11	*98497460*
	12-14	*98497461*

Content

Pos.	Description	Stages	Quantity
45	Seal ring	1-2	2
		3-7	7
		8-11	11
		12-14	14
47c	Bush (Graflon)	1-2	1
		3-7	5
		8-11	8
		12-14	11
47d	Lock ring	1-2	2
		3-7	7
		8-11	11
		12-14	14
49c	Wear ring	1-2	2
		3-7	7
		8-11	11
		12-14	14
65	Top for neck ring N	1-2	2
		3-7	7
		8-11	11
		12-14	14
	Adjusting fork	1-2	1
		3-7	
		8-11	
		12-14	

CR, CRN 32, model B

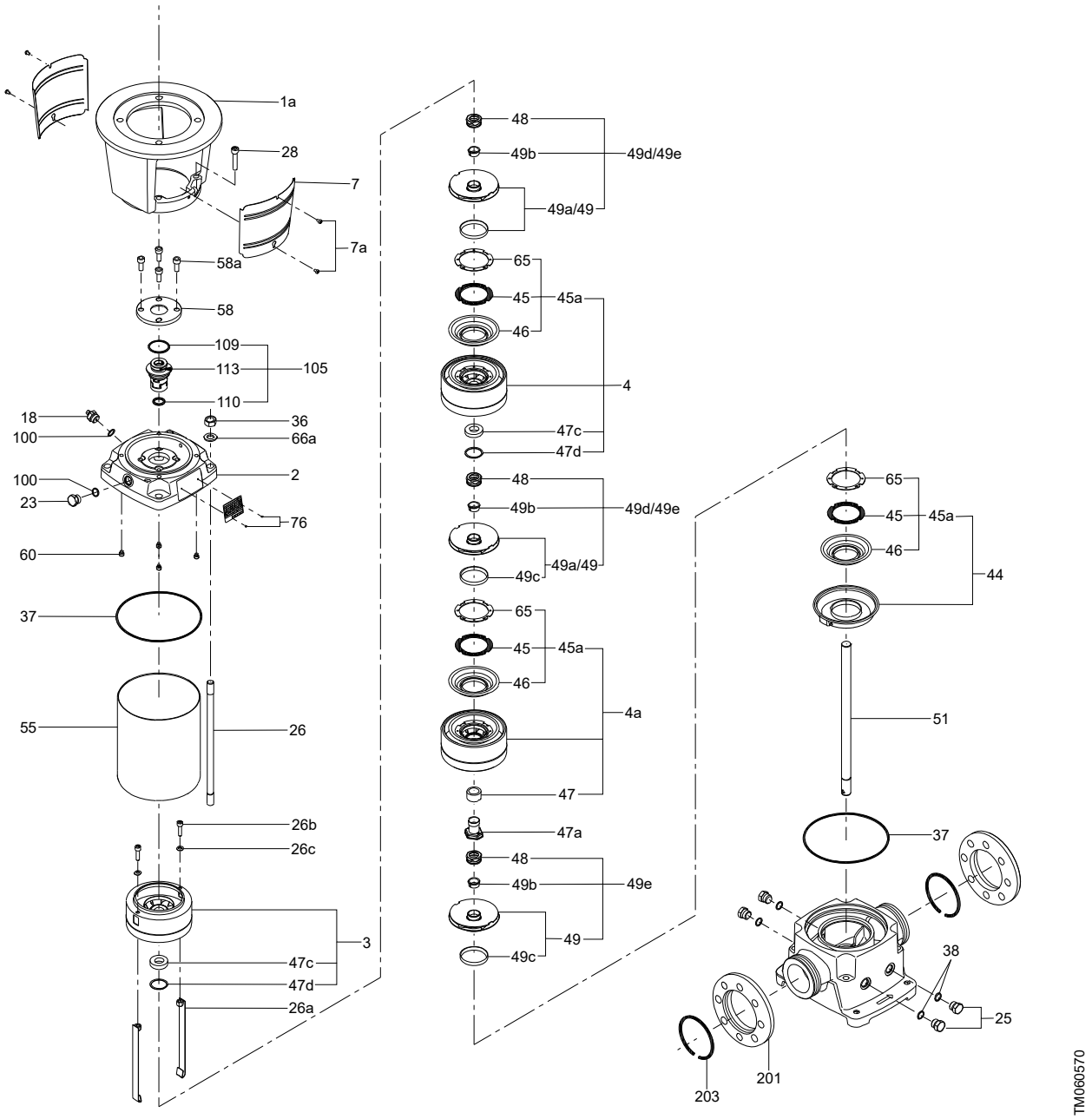

Coupling complete

Pos.	Kit No	96416589	96416590	96416591	96416592	96416593	96416594	96475477	96475478
	Motor/pump shaft diameter [mm]	24/22	28/22	38/22	42/22	48/22	55/22	42/22	48/22
	Description							For shafts with key and keyway	
10a	Coupling half	2	2	2	2	2	2	2	2
9	Hexagon socket head screw	4	4	4	4	4	4	4	4
9a	Hexagon socket head screw	-	-	-	-	-	-	1	1
9b	Washer	-	-	-	-	-	-	1	1
	Adjusting fork	1	1	1	1	1	1	1	1

Coupling complete NEMA

Motor/pump shaft diameter	Kit No
28.6/22	96417000
34.9/22	96417001
41.2/22	96417004
47.6/22	96417020

Content

Pos.	Description	Quantity
10a	Coupling half	2
9	Hexagon socket head screw	4
-	Adjusting fork	1

O-ring

Description	Kit No
EPDM	96416597
FKM	96416598

Content

Pos.	Description	Quantity
37	O-ring	2
38	O-ring	4
60	Spring (rubber)	4
100	O-ring	2
109	O-ring	1
110	O-ring	1
-	Adjusting fork (shaft seal)	1

Shaft seal

Description	Kit No
HQQE	96525458
HQQV	96525490
HQQK	96533369
HQQF	96533412
HQBE	96525457
HQBV	96525459
HUBK	96533365
HUBF	96533366
HUUE	96436727
HUUV	96436728
HUUK	96533367
HUUF	96533368

Content

Pos.	Description	Quantity
105	Shaft seal	1

CR, CRN 32, model B

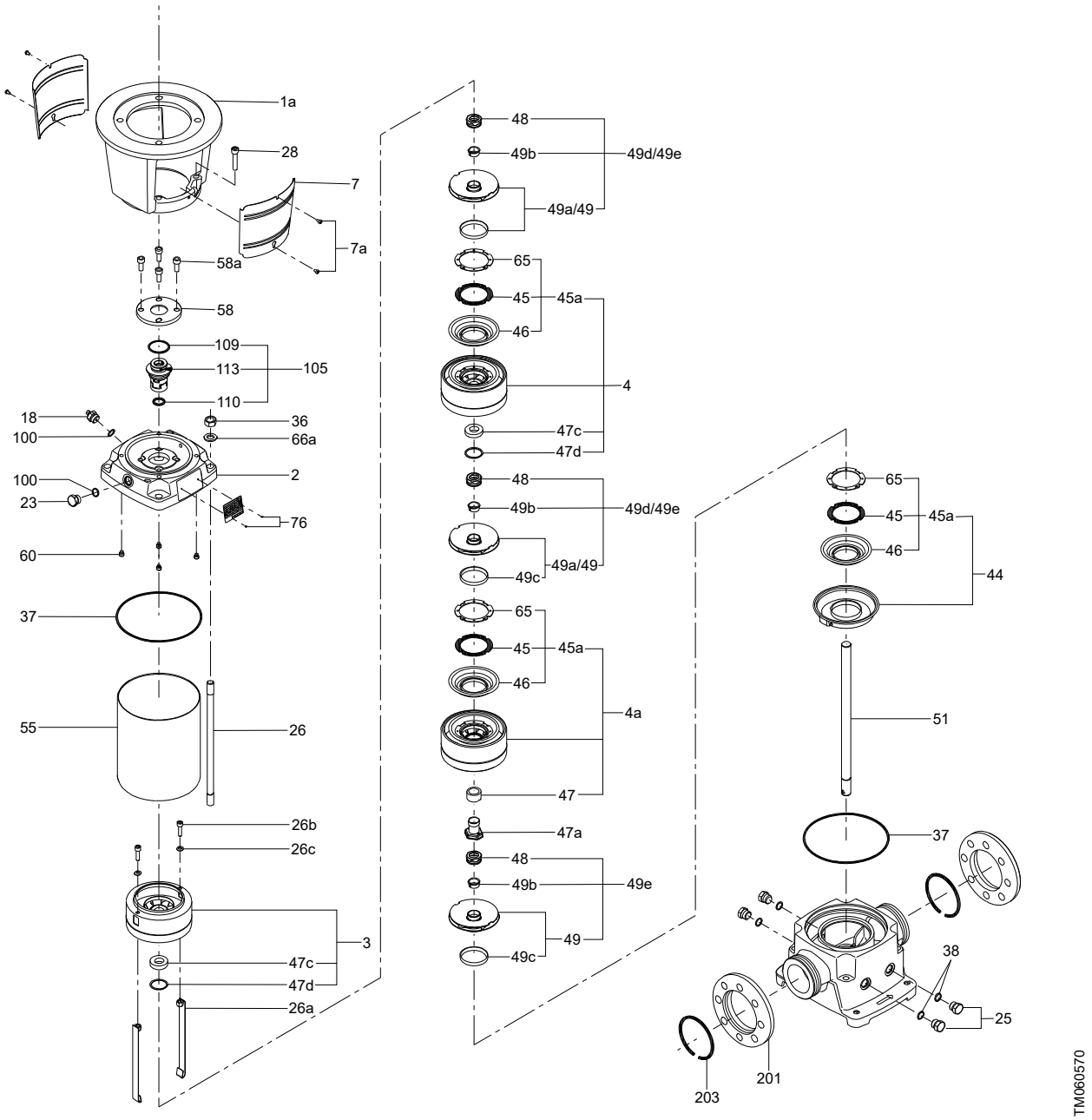

Chamber stack complete

Pumptype	CRN 32	CR 32
32-1-1	*96416290*	*96416273*
32-1	*96416291*	*96416274*
32-2-2	*96416918*	*96416905*
32-2-1	*96416292*	*96416275*
32-2	*96416293*	*96416276*
32-3-2	*96416919*	*96416906*
32-3	*96416294*	*96416277*
32-4-2	*96416920*	*96416907*
32-4	*96416295*	*96416278*
32-5-2	*96416921*	*96416908*
32-5	*96416296*	*96416279*
32-6-2	*96416922*	*96416909*
32-6	*96416297*	*96416280*
32-7-2	*96416923*	*96416910*
32-7	*96416298*	*96416281*
32-8-2	*96416924*	*96416911*
32-8	*96416299*	*96416282*
32-9-2	*96416925*	*96416912*
32-9	*96416300*	*96416283*
32-10-2	*96416926*	*96416913*
32-10	*96416301*	*96416284*
32-11-2	*96416927*	*96416914*
32-11	*96416302*	*96416285*
32-12-2	*96416928*	*96416915*
32-12	*96416303*	*96416286*
32-13-2	*96416929*	*96416916*
32-13	*96416304*	*96416287*
32-14-2	*96416930*	*96416917*
32-14	*96416305*	*96416288*

Content

Pos.	Description	Quantity
	Rotating unit	1

Coupling guard

Pos.	Kit No	*96505134*	*96505135*
	Description	MG 90 - MG 132	MG 160 - MG 225
7	Coupling guard	2	2
7a	Screw	4	4

Plug

Pos.	Kit No	*96505136*
	Description	EPDM/FKM
18	Air vent screw	1
23	Pipe plug	1
25	Pipe plug	4
38	O-ring 16.3 x 2.4	4
100	O-ring 16.3 x 2.4	2

CR, CRN 32, model B

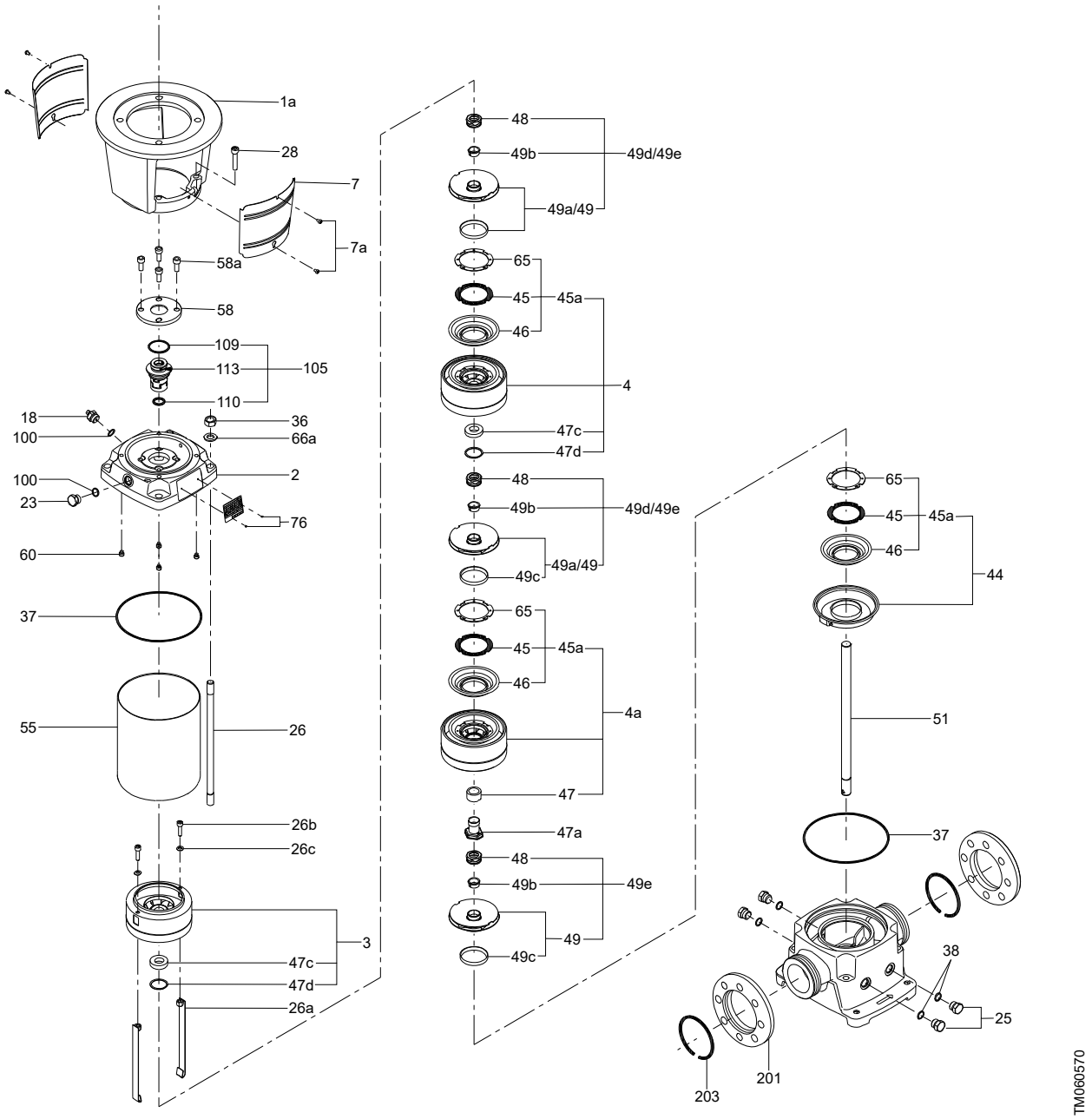

CR, CRN 45
50/60 Hz

Bearing

Pos.	Kit No	96416577	96416578
	Number of stages	3-7	8-13
	Description		
47a	Bearing	1	2
	Adjusting fork	1	1

Bottom bearing

Pos.	Kit No	96416580
	Description	1-14
6g	Bearing ring (stationary)	1
31	Hexagon socket head screw	1
32	Washer	1
47b	Bearing ring (rotating)	1
66	Washer	1
66b	Lock washer	1
67	Hexagon socket head screw	1
D+E	Puller complete	1

O-ring

Description	Kit No
EPDM	96416599
FKM	96416600
FFKM	97800437

Content

Pos.	Description	Quantity
37	O-ring	2
38	O-ring	4
60	Spring (rubber)	4
100	O-ring	2
109	O-ring	1
110	O-ring	1
	Adjusting fork (shaft seal)	1

Shaft seal

Description	Kit No
HQQE	96525458
HQQV	96525490
HQQK	96533369
HQQF	96533412
HQBE	96525457
HQBV	96525459
HUBK	96533365
HUBF	96533366
HUUE	96436727
HUUV	96436728
HUUK	96533367
HUUF	96533368

Content

Pos.	Description	Quantity
105	Shaft seal	1

Wear parts

Pos.	Kit No	96416732	96416733	96416734	96472046
	Description	1-2	3-7	8-10	11-13
45	Neck ring	2	7	10	13
47	Bearing (carbon-filled PTFE)		1	2	2
47	Bearing (bronze)		1	2	2
47c	Sleeve	2	6	8	11
47d	Lock ring	2	7	10	13
49c	Wear ring	2	7	10	13
65	Seal carrier	2	7	10	13
	Adjusting fork	1	1	1	1

CR, CRN 45

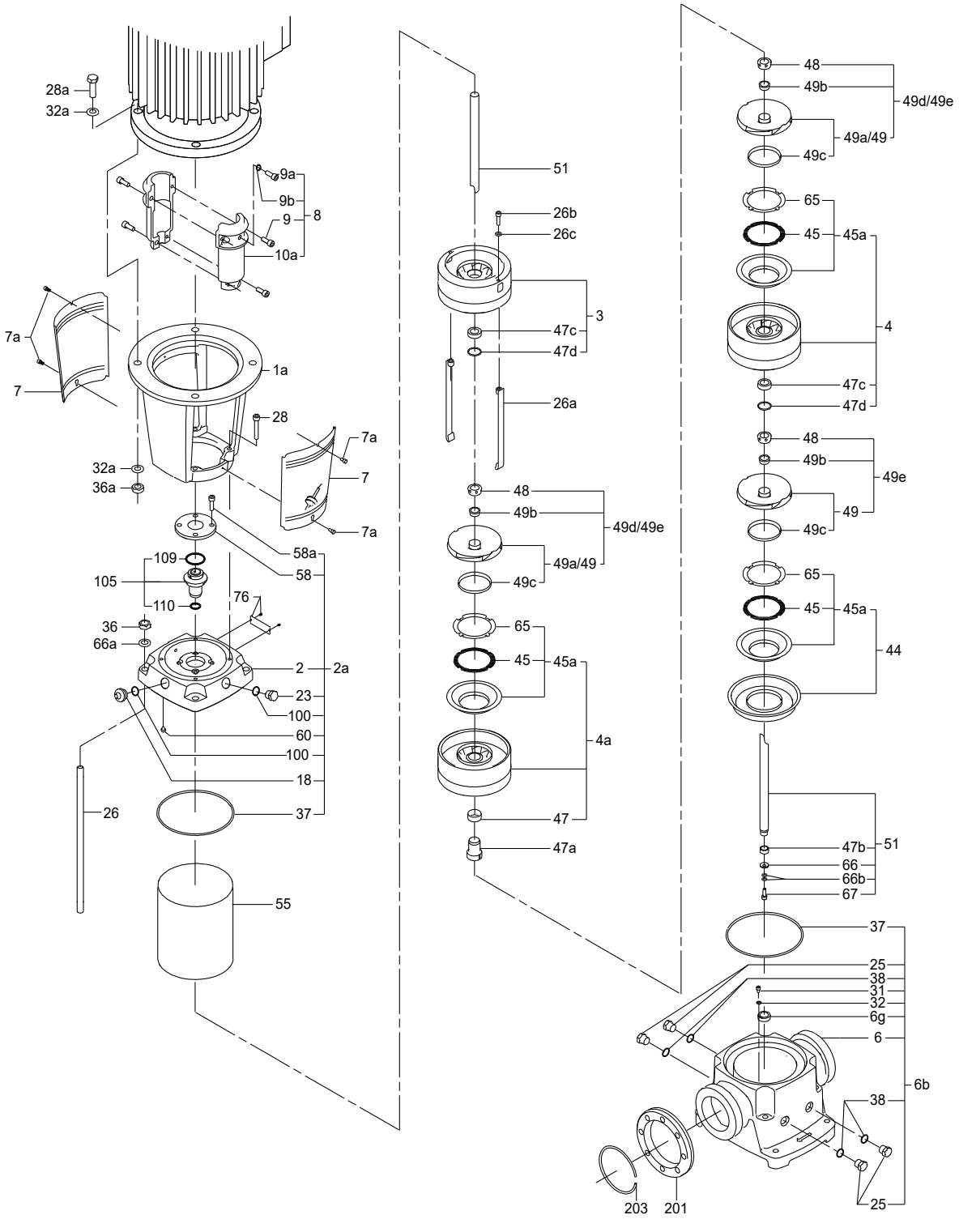
28a
32a
9a
9b
9
8
10a
7a
7
1a
28
32a
36a
7a
7
7a
58a
58
109
105
110
76
36
66a
2
2a
23
100
60
100
18
26
37
55
51
26b
26c
3
47c
47d
26a
48
49b
49d/49e
49a/49
49c
65
45
45a
4a
47
47a
48
49b
49d/49e
49a/49
49c
65
45
45a
4
47c
47d
48
49b
49e
49
49c
65
45
45a
44
47b
51
66
66b
67
37
25
38
31
32
6g
6
6b
38
25
203
201
TM022299

Chamber stack complete

Pumptype	CRN 45	CR 45
45-1-1	*96416239*	*96416222*
45-1	*96416240*	*96416223*
45-2-2	*96416241*	*96416224*
45-2-1	*96416242*	*96416225*
45-2	*96416243*	*96416226*
45-3-2	*96416244*	*96416227*
45-3-1	*96416939*	*96416932*
45-3	*96416245*	*96416228*
45-4-2	*96416246*	*96416229*
45-4-1	*96416940*	*96416933*
45-4	*96416247*	*96416230*
45-5-2	*96416941*	*96416934*
45-5-1	*96416248*	*96416231*
45-5	*96416249*	*96416232*
45-6-2	*96416250*	*96416233*
45-6	*96416251*	*96416234*
45-7-2	*96416942*	*96416935*
45-7-1	*96613063*	*96613069*
45-7	*96416252*	*96416235*
45-8-1	*97910307*	*97910305*
45-8-2	*96416943*	*96416936*
45-8	*96416253*	*96416236*
45-9-2	*96416254*	*96416237*
45-9	*96416944*	*96416937*
45-10-2	*96416945*	*96416938*
45-10	*96416255*	*96416238*

Content

Pos.	Description	Quantity
	Rotating assembly	1

Coupling complete

Pos.	Kit No	*96416590*	*96416591*	*96416592*	*96416593*	*96416594*	*96475477*	*96475478*
	Motor/pump shaft diameter [mm]	**28/22**	**38/22**	**42/22**	**48/22**	**55/22**	**42/22**	**48/22**
	Description						**For shafts with key and keyway**	
10a	Coupling half	2	2	2	2	2	2	2
9	Hexagon socket head screw	4	4	4	4	4	4	4
9a	Hexagon socket head screw	-	-	-	-	-	1	1
9b	Washer	-	-	-	-	-	1	1
	Adjusting fork	1	1	1	1	1	1	1

Coupling complete, NEMA

Motor/pump shaft diameter	Kit No
34.9/22	*96417001*
41.2/22	*96417004*
47.6/22	*96417020*

Content

Pos.	Description	Quantity
10a	Coupling half	2
9	Hexagon socket head screw	4
	Adjusting fork	1

Coupling guard

Pos.	Kit No	*96505134*	*96505135*
	Description	**MG 90 - MG 132**	**MG 160 - MG 225**
7	Coupling guard	2	2
7a	Screw	4	4

Plug

Pos.	Kit No	*96505136*
	Description	**EPDM/FKM**
18	Air vent screw	1
23	Pipe plug	1
25	Pipe plug	4
38	O-ring 16.3 x 2.4	4
100	O-ring 16.3 x 2.4	2

CR, CRN 45

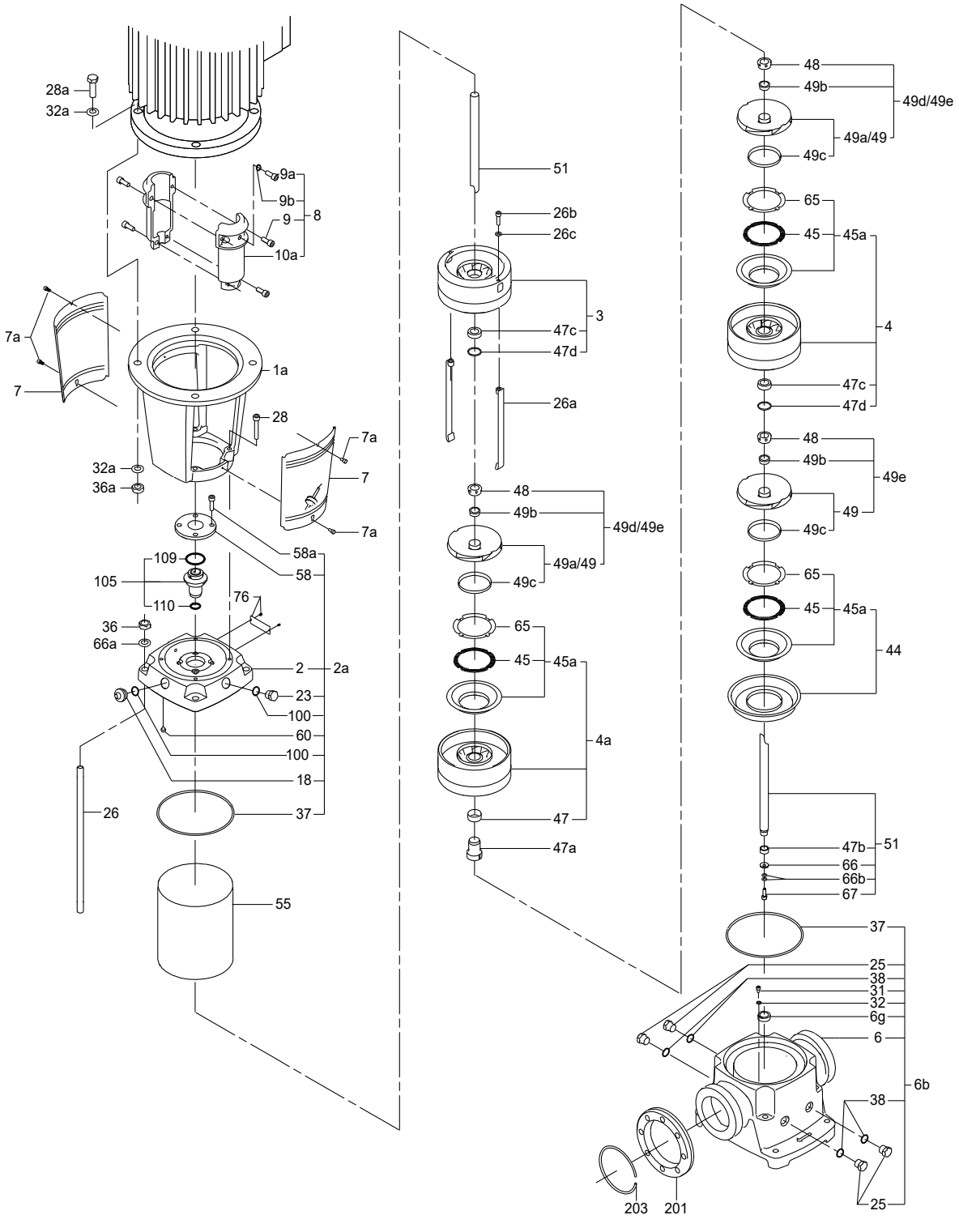
28a
32a
9a
9b
9
8
10a
7a
7
1a
28
32a
36a
7a
7
7a
58a
58
109
105
110
76
36
66a
2
2a
23
100
60
100
18
26
37
55
51
26b
26c
3
47c
47d
26a
48
49b
49d/49e
49a/49
49c
65
45
45a
4a
47
47a
48
49b
49d/49e
49a/49
49c
65
45
45a
4
47c
47d
48
49b
49e
49
49c
65
45
45a
44
47b
51
66
66b
67
37
25
38
31
32
6g
6
6b
38
25
203
201
TM022299

CR, CRN 45, model B

Chamber with bearing

Type	Kit No	
	CR	CRN
SIC/SIC	*98497485*	*98633888*
Graflon/HM	*98497486*	*98633889*
Bronze/HM	*98497487*	*98633981*

Pos.	Description	Quantity
4a	Chamber cpl.	1
47a	Rotating bearing	1

Impeller

Name	Kit No	
	CR	CRN
49	*98497488*	*98634001*

Content

Pos.	Description	Quantity
49	Impeller	1
48	Nut	1
48	Nut with slot	1
49b	Split cone	1

Impeller reduced

Name	Kit No	
	CR	CRN
49a	*98634014*	*98634018*

Content

Pos.	Description	Quantity
49a	Impeller	1
48	Nut	1
48	Nut with slot	1
49b	Split cone	1

Inlet part

Type	Kit No	
	CR	CRN
-	*98634054*	*98634055*

Content

Pos.	Description	Quantity
44	Inlet part cpl.	1

Upper chamber with bearing

Type	Kit No	
	CR	CRN
SIC/SIC	*98633982*	*98633988*
HY49/HM	*98633986*	*98633989*
Bronze/HM	*98633987*	*98633990*

Content

Pos.	Description	Quantity
3	Upper chamber cpl.	1
47a	Bearing cpl.	1

Spare chamber

Type	Kit No	
	CR	CRN
Graflon	*98497489*	*98634020*
Teflon	*98497490*	*98634032*
Bronze	*98497491*	*98497491*

Content

Pos.	Description	Quantity
4	Chamber with bush	1

Spare upper chamber

Type	Kit No	
	CR	CRN
Graflon	*98634042*	*98634048*
Teflon	*98634043*	*98634051*
Bronze	*98634046*	*98634046*

Content

Pos.	Description	Quantity
3	Upper chamber with bush	1

Wear parts

Type		Kit No
Graflon	1-2	*98497473*
	3-7	*98497474*
	8-10	*98497475*
	11-13	*98497476*
Teflon	1-2	*98497477*
	3-7	*98497478*
	8-10	*98497479*
	11-13	*98497480*
Bronze	1-2	*98497481*
	3-7	*98497482*
	8-10	*98497483*
	11-13	*98497484*

Content

Pos.	Description	Stages	Quantity
45	Seal ring	1-2	2
		3-7	7
		8-10	10
		11-13	13
47c	Bush	1-2	1
		3-7	5
		8-10	7
		11-13	10
47d	Lock ring	1-2	2
		3-7	7
		8-10	10
		11-13	13
49c	Wear ring	1-2	2
		3-7	7
		8-10	10
		11-13	13
65	Top for neck ring N	1-2	2
		3-7	7
		8-10	10
		11-13	13
-	Adjusting fork	1-2	1
		3-7	
		8-10	
		11-13	

CR, CRN 45, model B

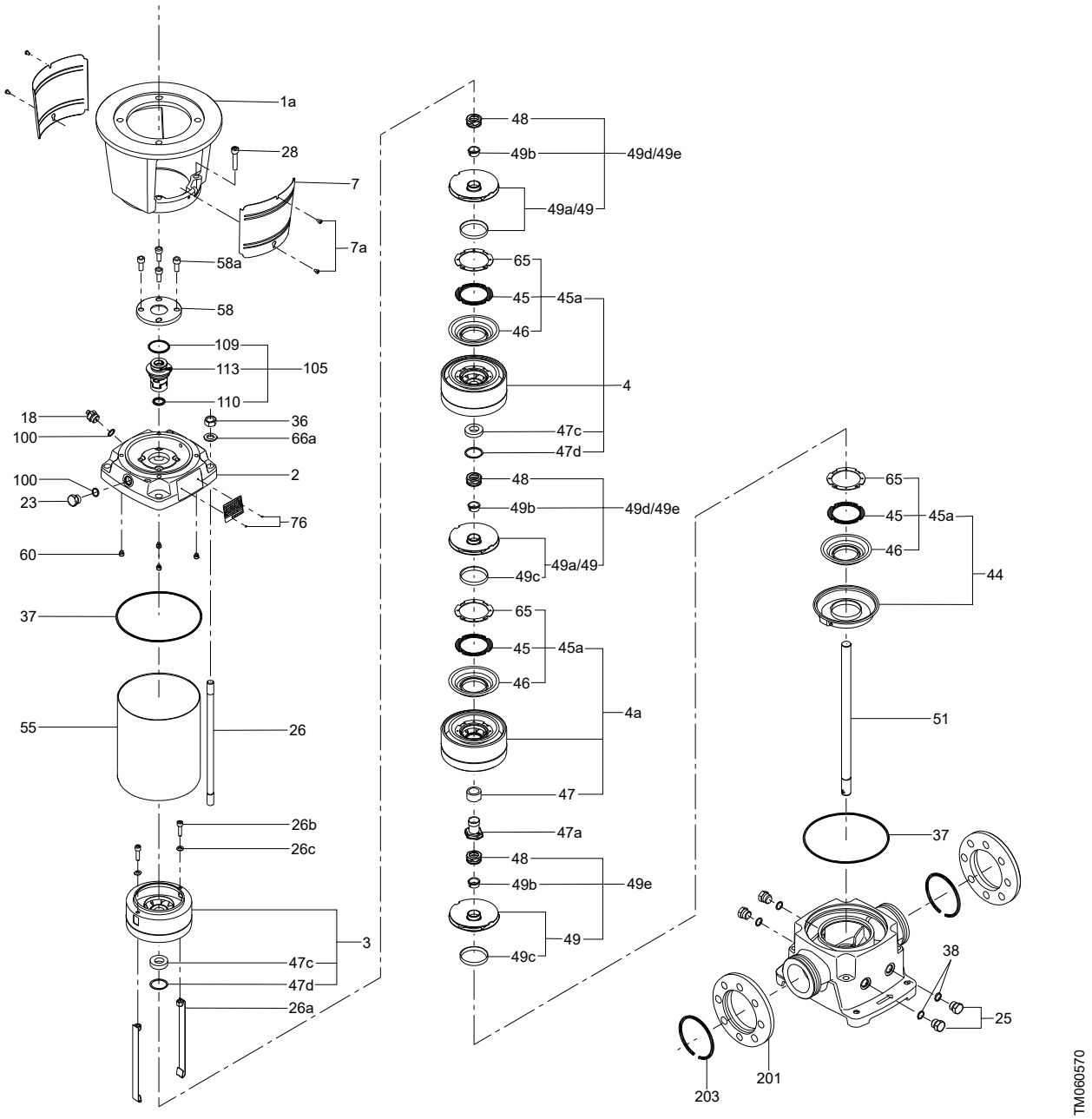

Coupling complete

Pos.	Kit No	96416590	96416591	96416592	96416593	96416594	96475477	96475478
	Motor/pump shaft diameter [mm]	28/22	38/22	42/22	48/22	55/22	42/22	48/22
	Description						For shafts with key and keyway	
10a	Coupling half	2	2	2	2	2	2	2
9	Hexagon socket head screw	4	4	4	4	4	4	4
9a	Hexagon socket head screw	-	-	-	-	-	1	1
9b	Washer	-	-	-	-	-	1	1
	Adjusting fork	1	1	1	1	1	1	1

Coupling complete, NEMA

Motor/pump shaft diameter	Kit No
34.9/22	96417001
41.2/22	96417004
47.6/22	96417020

Content

Pos.	Description	Quantity
10a	Coupling half	2
9	Hexagon socket head screw	4
	Adjusting fork	1

O-ring

Description	Kit No
EPDM	96416599
FKM	96416600
FFKM	97800437

Content

Pos.	Description	Quantity
37	O-ring	2
38	O-ring	4
60	Spring (rubber)	4
100	O-ring	2
109	O-ring	1
110	O-ring	1
	Adjusting fork (shaft seal)	1

Shaft seal

Description	Kit No
HQQE	96525458
HQQV	96525490
HQQK	96533369
HQQF	96533412
HQBE	96525457
HQBV	96525459
HUBK	96533365
HUBF	96533366
HUUE	96436727
HUUV	96436728
HUUK	96533367
HUUF	96533368

Content

Pos.	Description	Quantity
105	Shaft seal	1

CR, CRN 45, model B

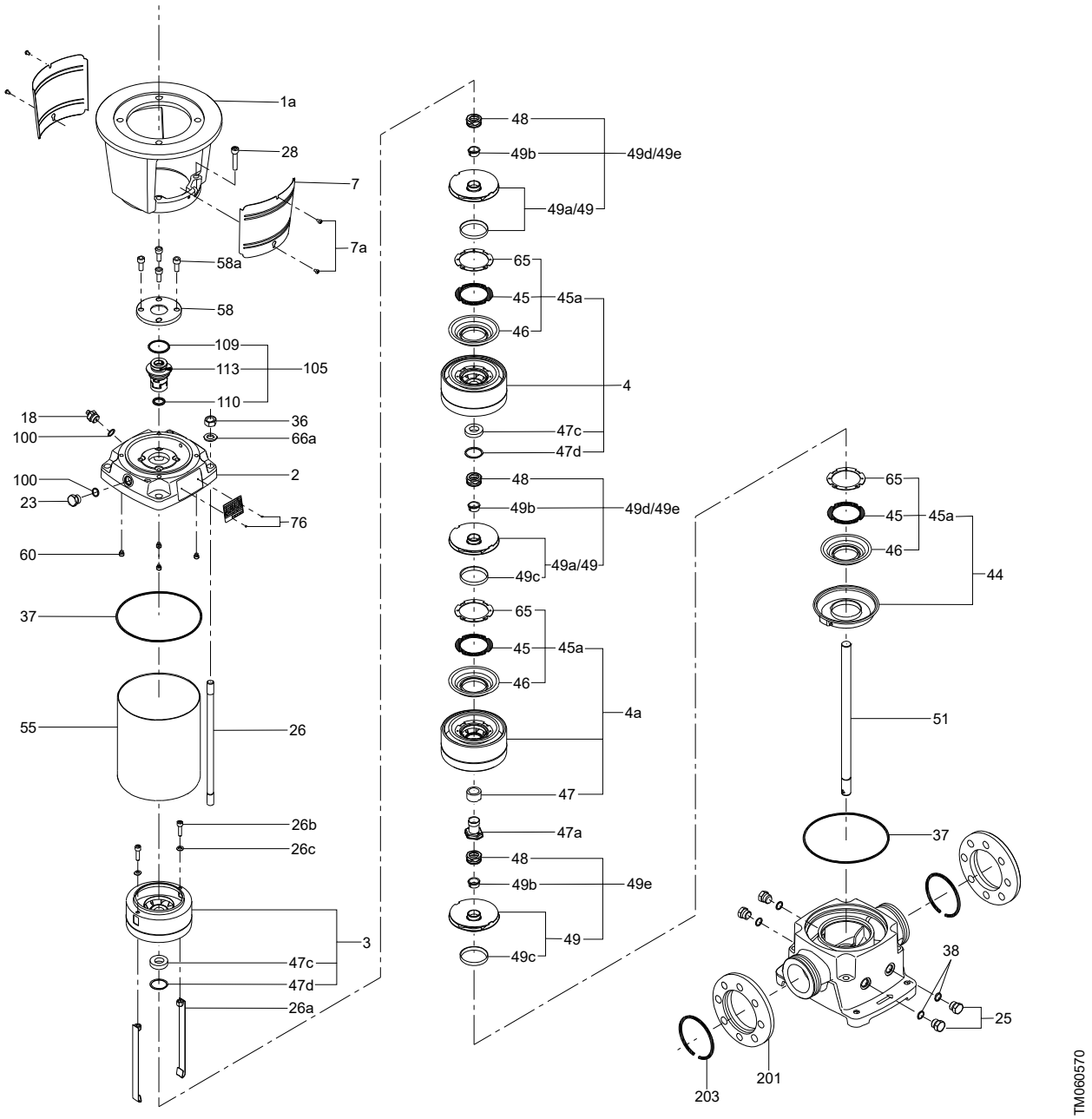

Chamber stack complete

Pumptype	CRN 45	CR 45
45-1-1	*96416239*	*96416222*
45-1	*96416240*	*96416223*
45-2-2	*96416241*	*96416224*
45-2-1	*96416242*	*96416225*
45-2	*96416243*	*96416226*
45-3-2	*96416244*	*96416227*
45-3-1	*96416939*	*96416932*
45-3	*96416245*	*96416228*
45-4-2	*96416246*	*96416229*
45-4-1	*96416940*	*96416933*
45-4	*96416247*	*96416230*
45-5-2	*96416941*	*96416934*
45-5-1	*96416248*	*96416231*
45-5	*96416249*	*96416232*
45-6-2	*96416250*	*96416233*
45-6	*96416251*	*96416234*
45-7-2	*96416942*	*96416935*
45-7-1	*96613063*	*96613069*
45-7	*96416252*	*96416235*
45-8-1	*97910307*	*97910305*
45-8-2	*96416943*	*96416936*
45-8	*96416253*	*96416236*
45-9-2	*96416254*	*96416237*
45-9	*96416944*	*96416937*
45-10-2	*96416945*	*96416938*
45-10	*96416255*	*96416238*

Content

Pos.	Description	Quantity
	Rotating assembly	1

Coupling guard

Pos.	Kit No	*96505134*	*96505135*
	Description	MG 90 - MG 132	MG 160 - MG 225
7	Coupling guard	2	2
7a	Screw	4	4

Plug

Pos.	Kit No	*96505136*
	Description	EPDM/FKM
18	Air vent screw	1
23	Pipe plug	1
25	Pipe plug	4
38	O-ring 16.3 x 2.4	4
100	O-ring 16.3 x 2.4	2

CR, CRN 45, model B

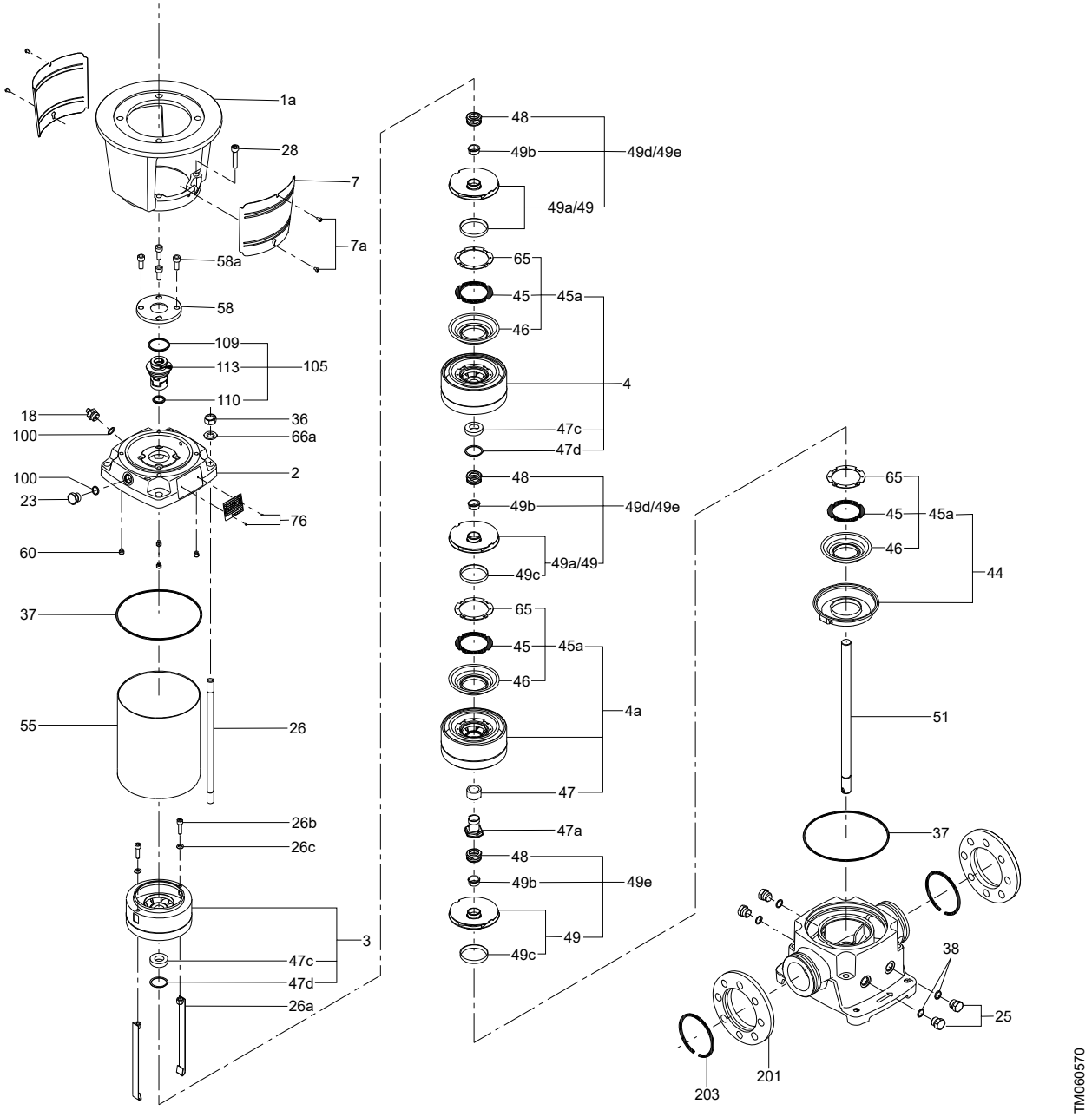

CRN 60

50/60 Hz, Model A

Chamber stack complete

Consists of items: 3a, 4, 4a, 44, 47a, 49, 51, 61, 64, 64a, 64b, 64c, 66, 67, 69	Kit No
Number of stages	Ceramic bearings
2	*365094*
3	*365095*
4	*365096*
5	*365097*
6	*365098*
7	*365099*
8	*365100*

Shaft seal

Pos.	Kit No	*345111*	*345210*	*345182*	*345208*	*345183*	*345209*	*345237*	*985910*
	Description	AUUE/V	AUUE/V	BBUE	BBUE	BBUV	BBUV	RUUE/V	AUUK
37	Vulcanised sleeve gasket	-	2	-	2	-	2	-	-
37	FFKM sleeve gasket	-	-	-	-	-	-	-	2
78	Rubber bush	1	1	1	1	1	1	1	-
100	O-ring	1 [1]	1 [1]	1	1	1	1	1 [1]	-
105	Shaft seal	1	1	1	1	1	1	1	1
109	O-ring	1 [1]	1 [1]	1	1	1	1	1 [1]	1 [2]

1 EPDM and FKM.

2 FFKM.

CRN 60

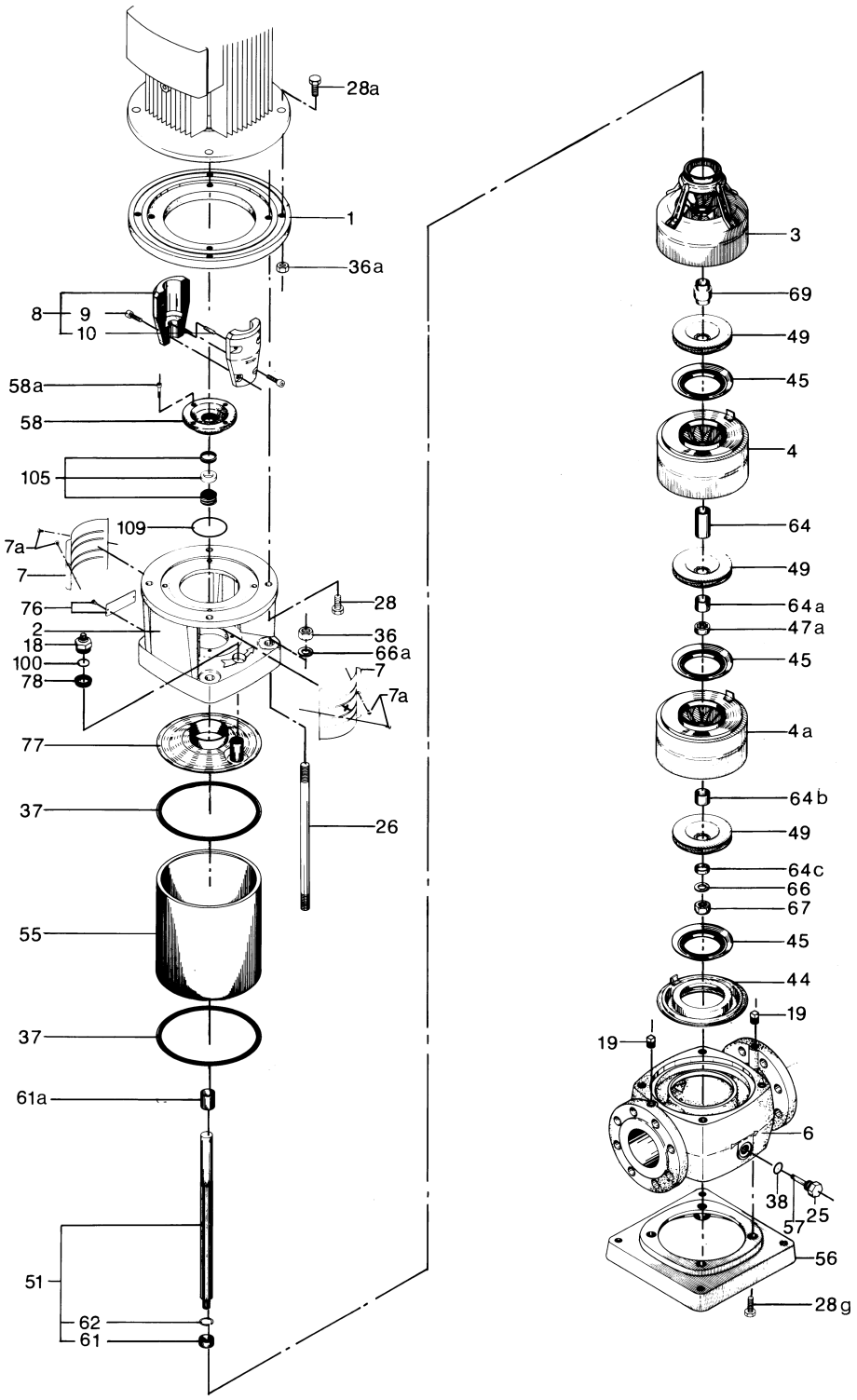

TM002245

CR 60

50/60 Hz, Model A

Wear parts

Pos.	Kit No	*345015*
	Description	**AUUE/V**
37	Sleeve gasket	2
38	Drain plug gasket	1
57	O-ring for drain plug [1]	1
58a	Screw	4
61	Spacer ring	1
102	O-ring [1]	1
103	Upper seal ring	1
104	Lower seal ring	1
106	Spring cup	1
107	O-ring [1]	1
108	Spring	1
109	O-ring [1]	1
111	Upper seal driver	1
112	Lower seal driver	1
113	Screw	2

1 EPDM and FKM.

CR 60, Model A

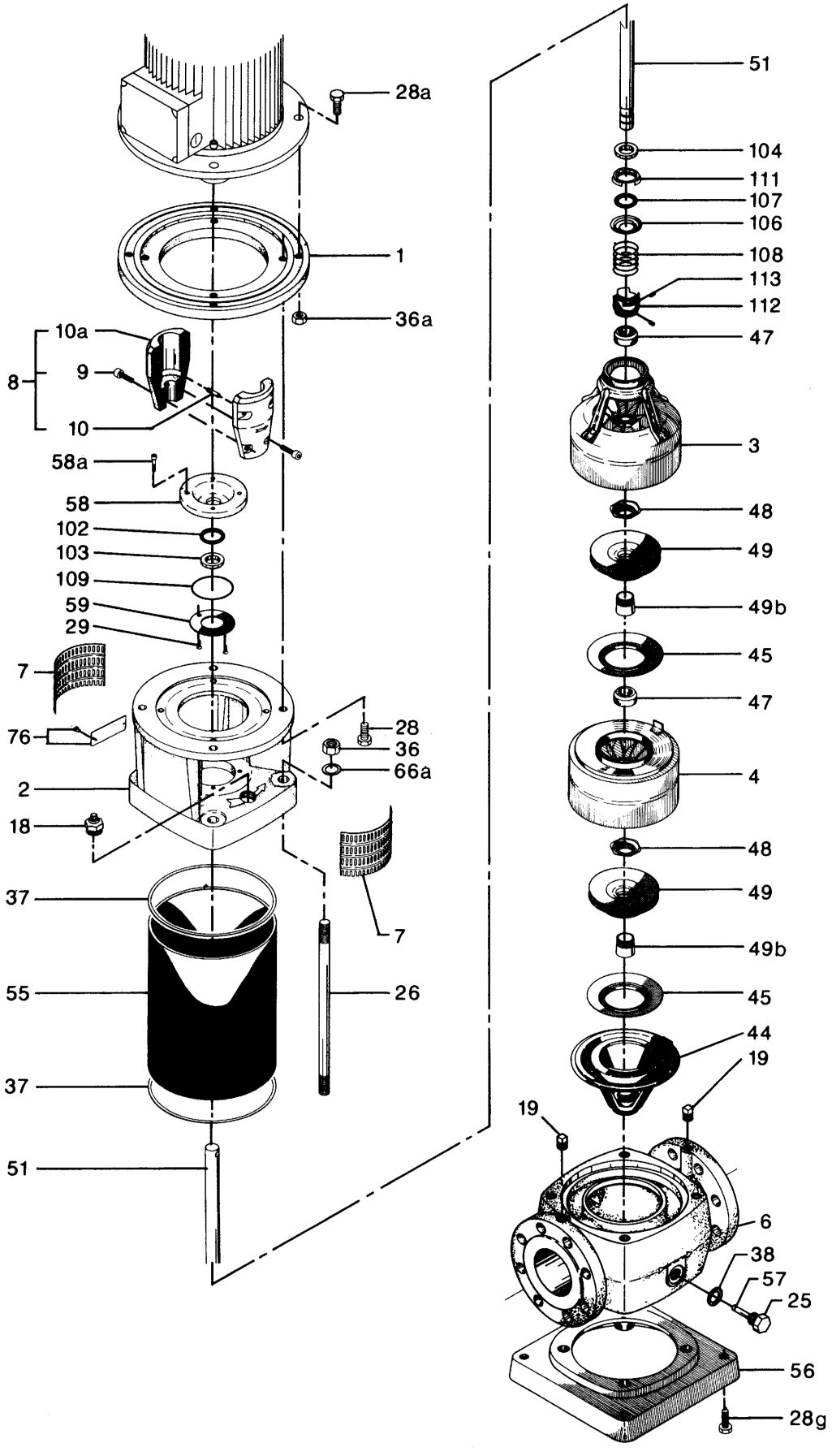

TM002238

50/60 Hz, Model B

Chamber stack complete

Consists of items: 3, 4, 4a, 44, 47a, 49, 51, 61, 64, 64a, 64b, 64c, 66, 67, 69	Kit No	Kit No
Number of stages	Ceramic bearings	Bronze bearings
2	365087	365121
3	365088	365122
4	365089	365123
5	365090	365124
6	365091	365125
7	365092	365126
8	365093	365127

Shaft seal

Pos.	Kit No	345122	345180	345181	345237	985910
	Description	AUUE/V	BBUE	BBUV	RUUE/V	AUUK
37	Sleeve gasket	2	2	2	-	-
37	FFKM sleeve gasket	-	-	-	-	2
105	Shaft seal	1	1	1	1	1
109	O-ring	1 [1]	1	1	1 [1]	1 [2]

1 EPDM and FKM.

2 FFKM.

Wear parts

	Kit No	365101	365102	365103	365104	365115	365116
	Number of stages	2-6	7-8	2-6	7-8	2-6	7-8
Pos.	Description			Ceramic bearings		Bronze bearings	
4a	Bearing chamber			1	2	1	2
37	Sleeve gasket	2	2	2	2	2	2
38	Drain plug gasket [1]	1	1	1	1	1	1
39	Flange gasket	1	1	1	1	1	1
45	Neck ring	6	8	6	8	6	8
47a	Bearing ring	1	2	1	2	1	2
57	O-ring for drain plug [1]	1	1	1	1	1	1
62	Stop ring	1	1	1	1	1	1
64c	Spacer	1	1	1	1	1	1
66	Spring washer	1	1	1	1	1	1
67	Lock nut	1	1	1	1	1	1
100	O-ring [1]	1	1	1	1	1	1

1 EPDM and FKM.

CR 60, Model B

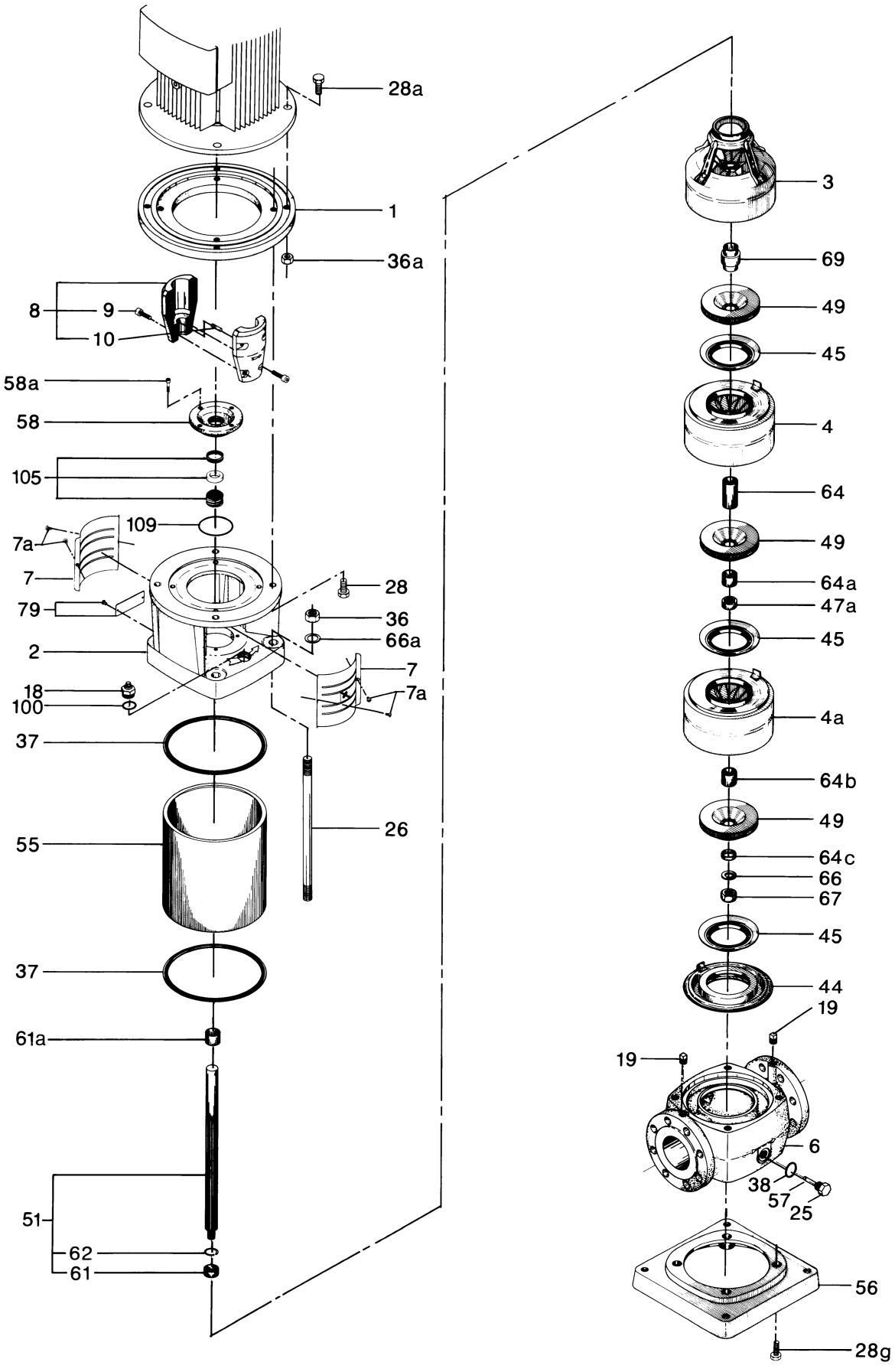
28a
1
36a
8
9
10
58a
58
105
109
7a
7
79
2
18
100
37
55
37
61a
51
62
61
1
28
36
66a
7
7a
26
3
69
49
45
4
64
49
64a
47a
45
4a
64b
49
64c
66
67
45
44
19
19
6
38
57
25
56
28g
TM002237

CR, CRN 64
50/60 Hz

Bearing

Pos.	Kit No	96416573
	Number of stages	3-8
	Description	
47a	Bearing	1
-	Adjusting fork	1

Bottom bearing

Pos.	Kit No	96416580
	Description	1-14
6g	Bearing ring (stationary)	1
31	Hexagon socket head screw	1
32	Washer	1
47b	Bearing ring (rotating)	1
66	Washer	1
66b	Lock washer	1
67	Hexagon socket head screw	1
D + E	Puller complete	1
-	Adjusting fork	1

Coupling guard

Pos.	Kit No	96505134	96505135
	Description	MG 90 - MG 132	MG 160 - MG 225
7	Coupling guard	2	2
7a	Screw	4	4

O-ring

Description	Kit No
EPDM	96416599
FKM	96416600
FFKM	97800437

Content

Pos.	Description	Quantity
37	O-ring	2
38	O-ring	4
60	Spring (rubber)	4
100	O-ring	2
109	O-ring	1
110	O-ring	1
-	Adjusting fork (shaft seal)	1

Shaft seal

Description	Kit No
HQQE	96525458
HQQV	96525490
HQQK	96533369
HQQF	96533412
HQBE	96525457
HQBV	96525459
HUBK	96533365
HUBF	96533366
HUUE	96436727
HUUV	96436728
HUUK	96533367
HUUF	96533368

Content

Pos.	Description	Quantity
105	Shaft seal	1

Wear parts

Pos.	Kit No	96416735	96416736
	Description	1-2	3-8
45	Neck ring	2	8
47	Bearing (carbon-filled PTFE)	-	2
47	Bearing (bronze)	-	2
47c	Sleeve	2	7
47d	Lock ring	2	8
49c	Wear ring	2	8
65	Seal carrier	2	8
	Adjusting fork	1	1

CR, CRN 64

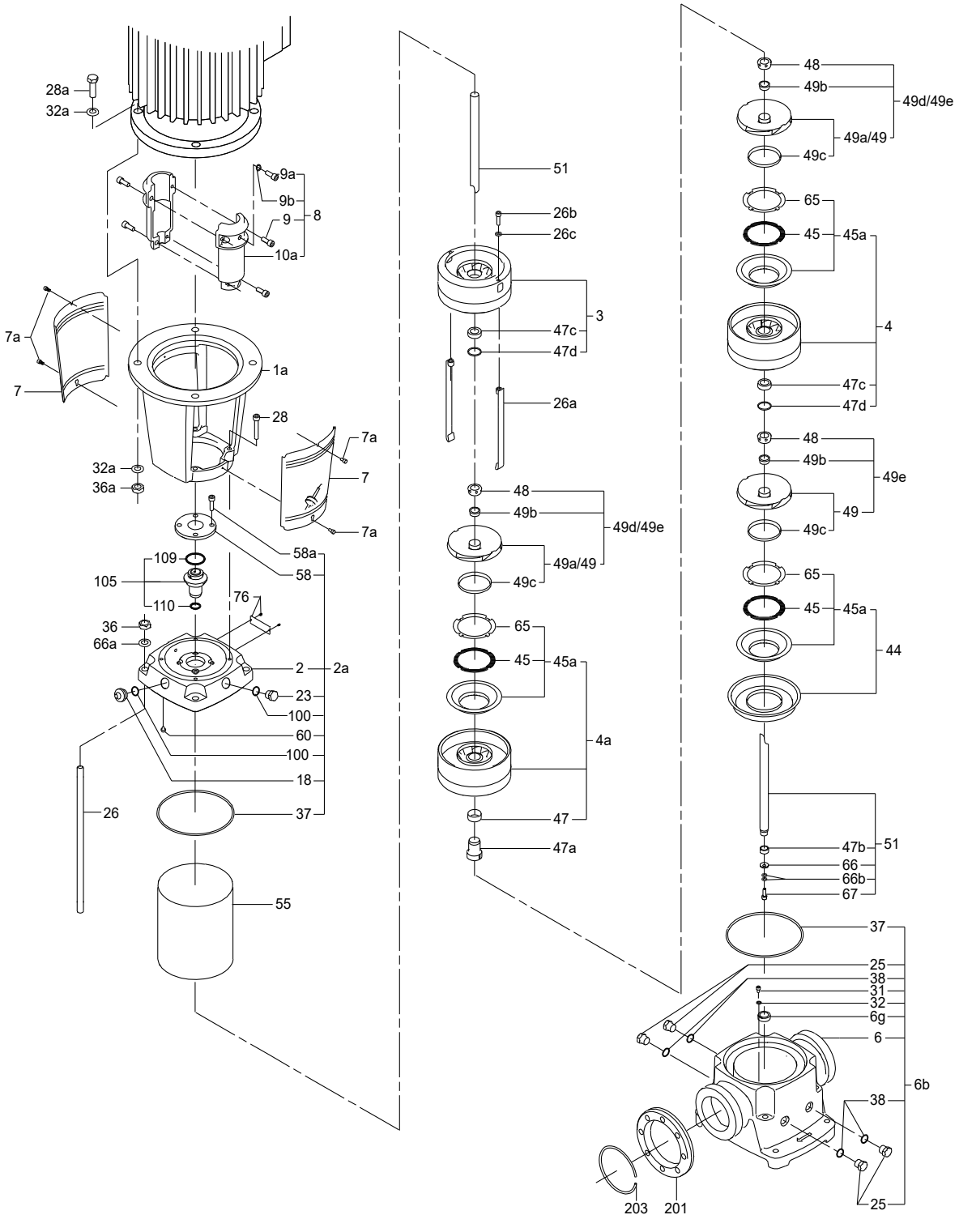
28a
32a
9a
9b
9
8
10a
7a
7
1a
28
32a
36a
7a
7
7a
58a
58
109
105
110
76
36
66a
2
2a
23
100
60
100
18
26
37
55
51
26b
26c
3
47c
47d
26a
48
49b
49d/49e
49a/49
49c
65
45
45a
4a
47
47a
48
49b
49d/49e
49a/49
49c
65
45
45a
4
47c
47d
48
49b
49e
49
49c
65
45
45a
44
47b
51
66
66b
67
37
25
38
31
32
6g
6
6b
38
25
203
201
TM022299

Chamber stack complete

Pumptype	CRN 64	CR 64
64-1-1	*96416326*	*96416307*
64-1	*96416327*	*96416308*
64-2-2	*96416328*	*96416309*
64-2-1	*96416329*	*96416310*
64-2	*96416330*	*96416311*
64-3-2	*96416331*	*96416312*
64-3-1	*96416332*	*96416313*
64-3	*96416333*	*96416314*
64-4-2	*96416334*	*96416315*
64-4-1	*96416335*	*96416316*
64-4	*96416336*	*96416317*
64-5-2	*96416337*	*96416318*
64-5-1	*96416338*	*96416319*
64-5	*96416339*	*96416320*
64-6-2	*96416340*	*96416321*
64-6-1	*96416341*	*96416322*
64-6	*96416342*	*96416323*
64-7-2	*96416343*	*96416324*
64-7-1	*96416344*	*96416325*

Content

Pos.	Description	Quantity
	Rotating assembly	1

Coupling complete

Pos.	Kit No	*96416590*	*96416591*	*96416592*	*96416593*	*96416594*	*96475477*	*96475478*
	Motor/pump shaft diameter [mm]	**28/22**	**38/22**	**42/22**	**48/22**	**55/22**	**42/22**	**48/22**
	Description						**For shafts with key and keyway**	
10a	Coupling half	2	2	2	2	2	2	2
9	Hexagon socket head screw	4	4	4	4	4	4	4
9a	Hexagon socket head screw	-	-	-	-	-	1	1
9b	Washer	-	-	-	-	-	1	1
	Adjusting fork	1	1	1	1	1	1	1

Coupling complete NEMA

Motor/pump shaft diameter	Kit No
34.9/22	*96417001*
41.2/22	*96417004*
47.6/22	*96417020*

Content

Pos.	Description	Quantity
10a	Coupling half	2
9	Hexagon socket head screw	4
	Adjusting fork	1

Plug

Pos.	Kit No	*96505136*
	Description	**EPDM/FKM**
18	Air vent screw	1
23	Pipe plug	1
25	Pipe plug	4
38	O-ring 16.3 x 2.4	4
100	O-ring 16.3 x 2.4	2

CR, CRN 64

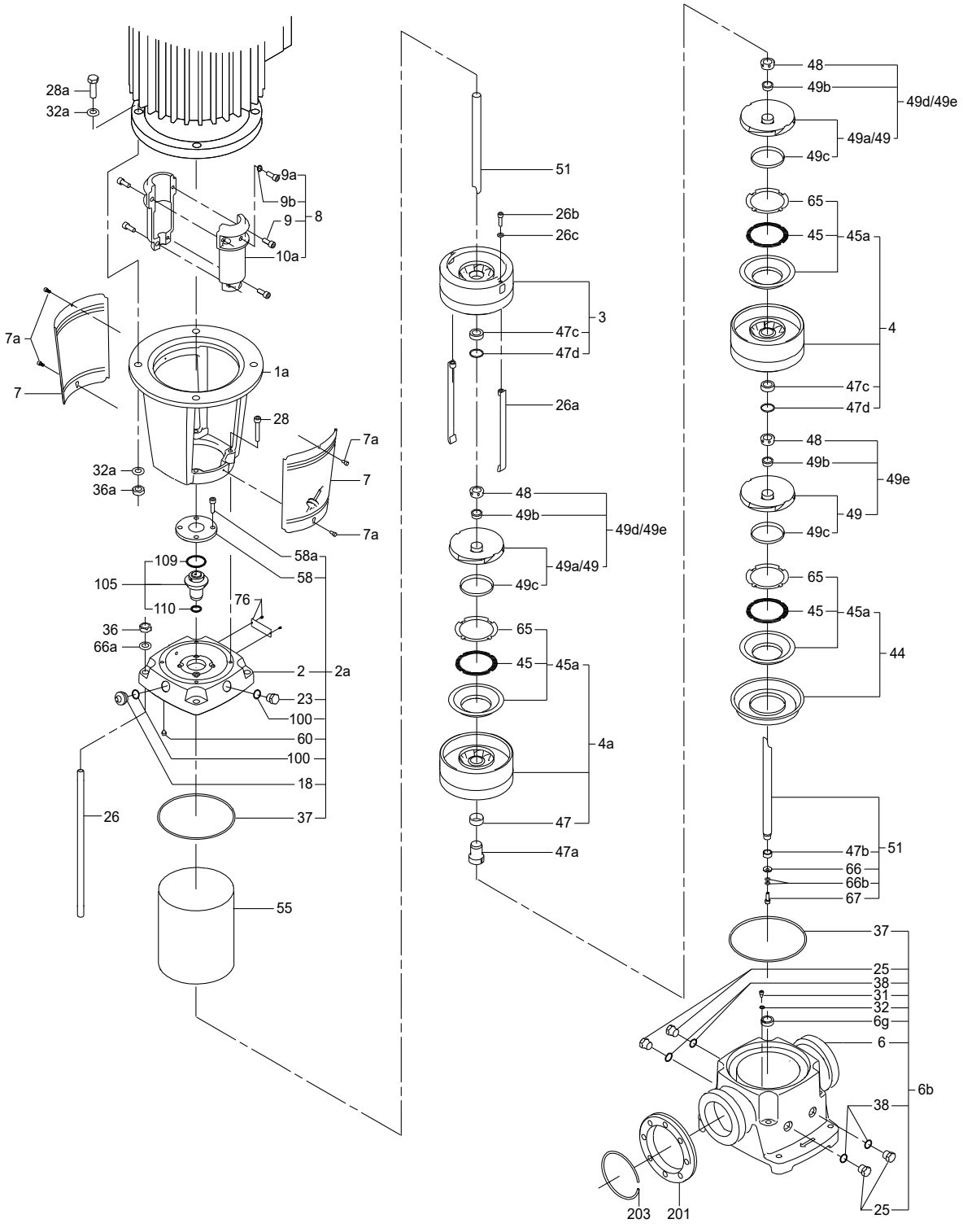
28a
32a
9a
9b
9
8
10a
7a
7
1a
28
32a
36a
7a
7
7a
58a
58
109
105
110
76
36
66a
2
2a
23
100
60
100
18
26
37
55
51
26b
26c
3
47c
47d
26a
48
49b
49d/49e
49a/49
49c
65
45
45a
4a
47
47a
48
49b
49d/49e
49a/49
49c
65
45
45a
4
47c
47d
48
49b
49e
49
49c
65
45
45a
44
47b
51
66
66b
67
37
25
38
31
32
6g
6
6b
38
25
203
201
TM022299

CR, CRN 64, model B

O-ring

Description	Kit No
EPDM	*96416599*
FKM	*96416600*
FFKM	*97800437*

Content

Pos.		Quantity
37	O-ring	2
38	O-ring	4
60	Spring (rubber)	4
100	O-ring	2
109	O-ring	1
110	O-ring	1
-	Adjusting fork (shaft seal)	1

Plug

Pos.	Kit No	*96505136*
	Description	EPDM/FKM
18	Air vent screw	1
23	Pipe plug	1
25	Pipe plug	4
38	O-ring 16.3 x 2.4	4
100	O-ring 16.3 x 2.4	2

Spare chamber

Type	Kit No	
	CR	CRN
Graflon	*98497504*	*98634095*
Teflon	*98497505*	*98634142*
Bronze	*98497506*	*98497506*

Content

Pos.	Description	Quantity
4	chamber with bush	1

Spare upper chamber

Type	Kit No	
	CR	CRN
Graflon	*98634144*	*98634150*
Teflon	*98634146*	*98634151*
Bronze	*98634148*	*98634148*

Content

Pos.	Description	Quantity
3	Upper chamber with bush	1

Shaft seal

Description	Kit No
HQQE	*96525458*
HQQV	*96525490*
HQQK	*96533369*
HQQF	*96533412*
HQBE	*96525457*
HQBV	*96525459*
HUBK	*96533365*
HUBF	*96533366*
HUUE	*96436727*
HUUV	*96436728*
HUUK	*96533367*
HUUF	*96533368*

Content

Pos.	Description	Quantity
105	Shaft seal	1

Wear parts

Type		Kit No
Graflon	1-2	*98497494*
	3-8	*98497495*
Teflon	1-2	*98497496*
	3-8	*98497497*
Bronze	1-2	*98497498*
	3-8	*98497499*

Content

Pos.	Description	Stages	*Quantity*
45	Seal ring	1-2	2
		3-8	8
47c	Bush	1-2	1
		3-8	6
47d	Lock ring	1-2	2
		3-8	8
49c	Wear ring	1-2	2
		3-8	8
65	Top for neck ring N	1-2	2
		3-8	8
-	Adjusting fork	1-2	1
		3-8	

Upper chamber with bearing

Type	Kit No	
	CR	CRN
SIC/SIC	*98634071*	*98634076*
HY49/HM	*98634072*	*98634077*
Bronze/HM	*98634074*	*98634078*

Content

Pos.	Description	Quantity
3	Upper chamber cpl.	1
47a	Bearing cpl.	1

CR, CRN 64, model B

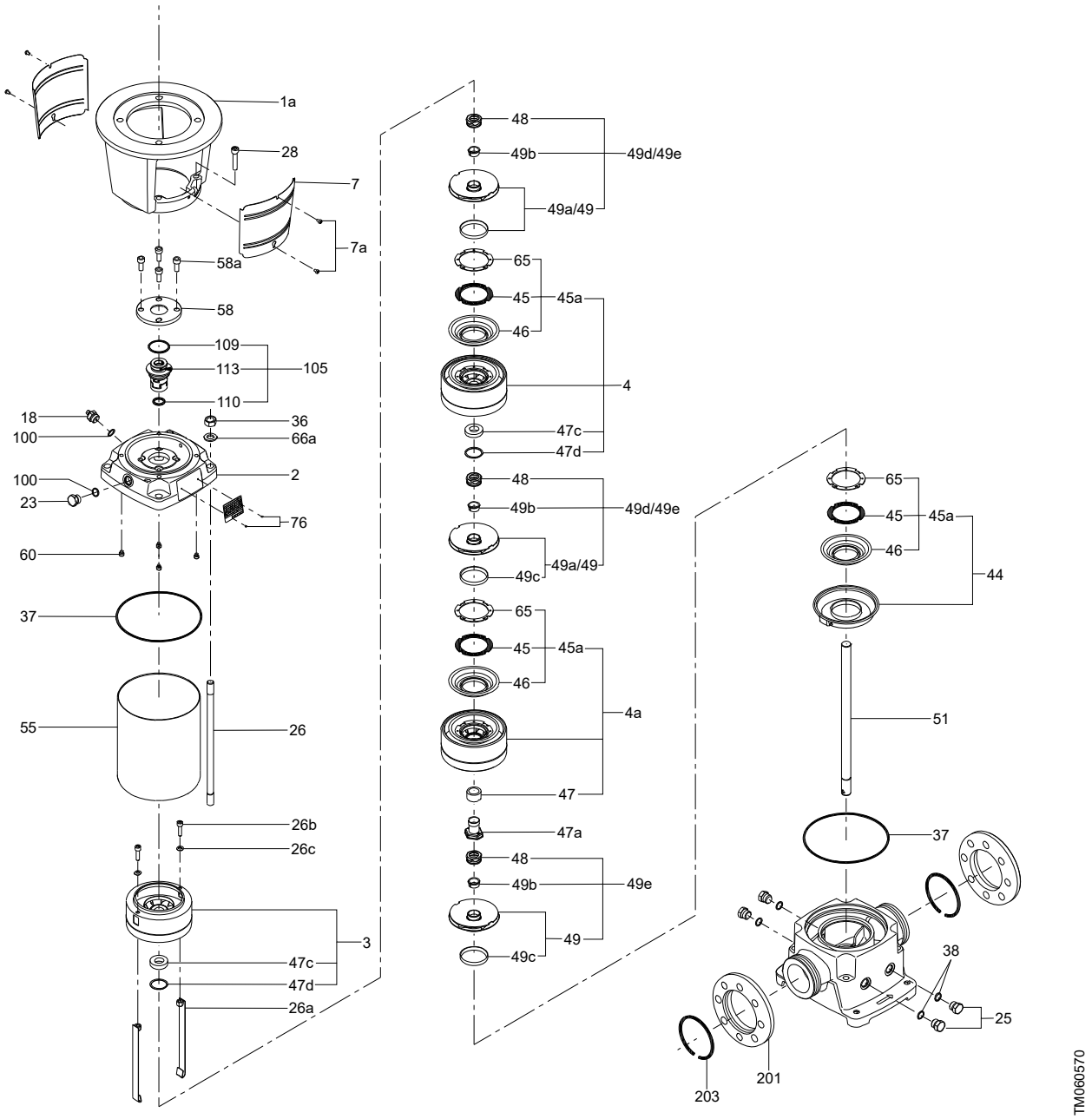

Chamber stack complete

Pumptype	CRN 64	CR 64
64-1-1	96416326	96416307
64-1	96416327	96416308
64-2-2	96416328	96416309
64-2-1	96416329	96416310
64-2	96416330	96416311
64-3-2	96416331	96416312
64-3-1	96416332	96416313
64-3	96416333	96416314
64-4-2	96416334	96416315
64-4-1	96416335	96416316
64-4	96416336	96416317
64-5-2	96416337	96416318
64-5-1	96416338	96416319
64-5	96416339	96416320
64-6-2	96416340	96416321
64-6-1	96416341	96416322
64-6	96416342	96416323
64-7-2	96416343	96416324
64-7-1	96416344	96416325

Content

Pos.	Description	Quantity
	Rotating assembly	1

Chamber with bearing

Type	Kit No	
	CR	CRN
SIC/SIC	98497500	98634056
Graflon/HM	98497501	98634058
Bronze/HM	98497502	98634059

Content

Pos.	Description	Quantity
4a	Chamber cpl.	1
47a	Rotating bearing	1

Coupling complete

Pos.	Kit No	96416590	96416591	96416592	96416593	96416594	96475477	96475478
	Motor/pump shaft diameter [mm]	28/22	38/22	42/22	48/22	55/22	42/22	48/22
	Description						For shafts with key and keyway	
10a	Coupling half	2	2	2	2	2	2	2
9	Hexagon socket head screw	4	4	4	4	4	4	4
9a	Hexagon socket head screw	-	-	-	-	-	1	1
9b	Washer	-	-	-	-	-	1	1
	Adjusting fork	1	1	1	1	1	1	1

Coupling complete NEMA

Motor/pump shaft diameter	Kit No
34.9/22	96417001
41.2/22	96417004
47.6/22	96417020

Content

Pos.	Description	Quantity
10a	Coupling half	2
9	Hexagon socket head screw	4
	Adjusting fork	1

Coupling guard

Pos.	Kit No	96505134	96505135
	Description	MG 90 - MG 132	MG 160 - MG 225
7	Coupling guard	2	2
7a	Screw	4	4

Impeller

Name	Kit No	
	CR	CRN
	98497503	98634079

Content

Pos.	Description	Quantity
49	Impeller	1
48	Nut	1
48	Nut with slot	1
49b	Split cone	1

Impeller reduced

Name	Kit No	
	CR	CRN
	98634080	98634093

Content

Pos.	Description	Quantity
49	Impeller	1
48	Nut	1
48	Nut with slot	1
49b	Split cone	1

Inlet part

Type	Kit No	
	CR	CRN
-	98634152	98634153

Content

Pos.	Description	Quantity
44	Inlet part cpl.	1

CR, CRN 64, model B

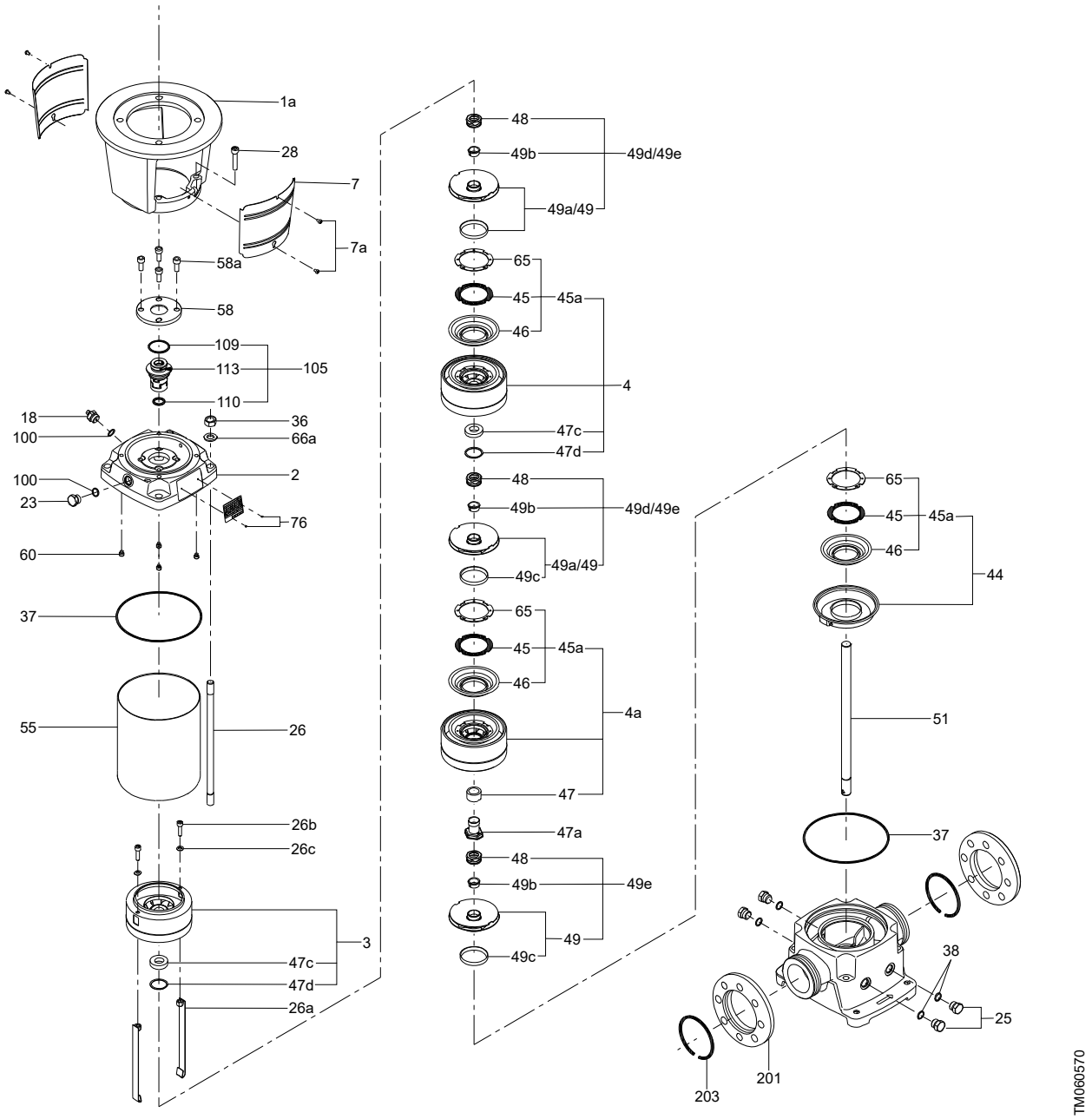

CR, CRN 90
50/60 Hz

Bearing

Pos.	Kit No	96416579
	Number of stages	3-6
	Description	
47a	Bearing	1
-	Adjusting fork	1

Coupling guard

Pos.	Kit No	96505134	96505135
	Description	MG 90 - MG 132	MG 160 - MG 225
7	Coupling guard	2	2
7a	Screw	4	4

Impeller 1. stage

Type	Standard	Reduced
Standard	98593752	98593755
Teflon	98593759	98593761
Electro pol.	98593764	98593769

Content

Pos.	Description	Quantity
49	Impeller	1
	Suction interconnector	1
	Nut for hub with spring	1

O-ring

Description	Kit No
EPDM	96416601
FKM	96416602

Content

Pos.	Description	Quantity
37	O-ring	2
38	O-ring	4
60	Spring (rubber)	4
100	O-ring	2
109	O-ring	1
110	O-ring	1
-	Adjusting fork (shaft seal)	1

Shaft seal

Description	Kit No
HQQE	96525458
HQQV	96525490
HQQK	96533369
HQQF	96533412
HQBE	96525457
HQBV	96525459
HUBK	96533365
HUBF	96533366
HUUE	96436727
HUUV	96436728
HUUK	96533367
HUUF	96533368

Content

Pos.	Description	Quantity
105	Shaft seal	1

Wear parts

Pos.	Kit No	96416737	96416738
	Description / number of stages	1-2	3-6
45	Neck ring	2	6
47	Bearing (carbon-filled PTFE)	-	1
47	Bearing bronze	-	1
47c	Sleeve	2	5
47d	Lock ring	2	6
49c	Wear ring	2	6
65	Seal carrier	2	6
	Adjusting fork	1	1

CR, CRN 90

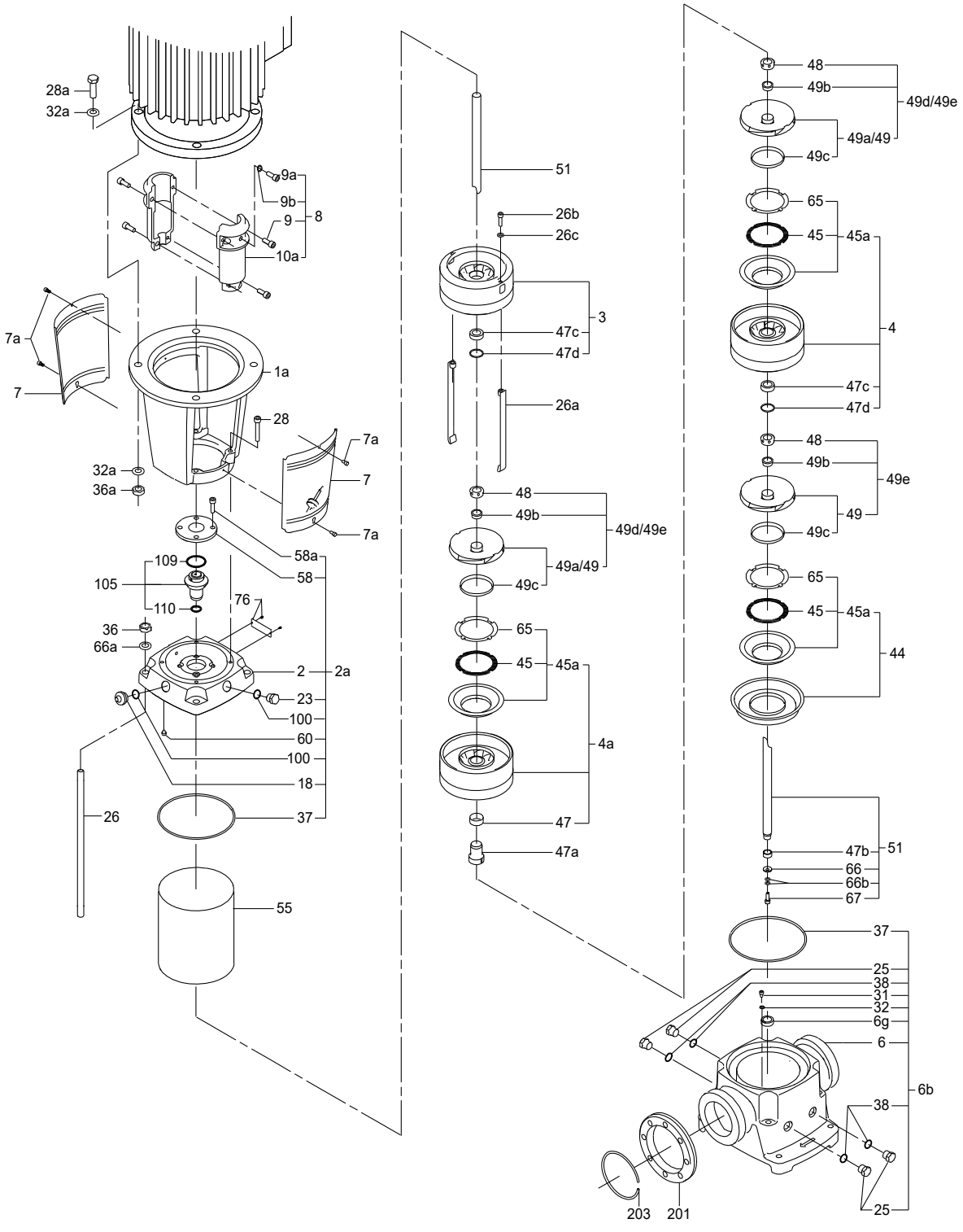
28a
32a
9a
9b
9
8
10a
7a
7
1a
28
32a
36a
7a
7
7a
58a
58
109
105
110
76
36
66a
2
2a
23
100
60
100
18
26
37
55
51
26b
26c
3
47c
47d
26a
48
49b
49d/49e
49a/49
49c
65
45
45a
4a
47
47a
48
49b
49d/49e
49a/49
49c
65
45
45a
4
47c
47d
48
49b
49e
49
49c
65
45
45a
44
47b
51
66
66b
67
37
25
38
31
32
6g
6
6b
38
25
203
201
TM022299

Chamber stack complete

Pumptype	CRN 90	CR 90
90-1	*96458125*	*96416257*
90-1-1	*96458124*	*96416256*
90-2	*96458128*	*96416260*
90-2-1	*96458127*	*96416259*
90-2-2	*96458126*	*96416258*
90-3	*96458131*	*96416263*
90-3-1	*96458130*	*96416262*
90-3-2	*96458129*	*96416261*
90-4	*96458134*	*96416266*
90-4-1	*96458133*	*96416265*
90-4-2	*96458132*	*96416264*
90-5	*96458136*	*96416269*
90-5-1	*96493483*	*96416268*
90-5-2	*96458135*	*96416267*
90-6	*96458138*	*96416272*
90-6-1	*96465601*	*96416271*
90-6-2	*96458137*	*96416270*

Content

Pos.	Description	Quantity
80	Rotating assembly	1

Coupling complete

Pos.	Kit No	*96416591*	*96416592*	*96416593*	*96416594*	*96475477*	*96475478*
	Motor/pump shaft diameter [mm]	**38/22**	**42/22**	**48/22**	**55/22**	**42/22**	**48/22**
	Description					**For shafts with key and key-way**	
10a	Coupling half	2	2	2	2	2	2
9	Hexagon socket head screw	4	4	4	4	4	4
9a	Hexagon socket head screw	-	-	-	-	1	1
9b	Washer	-	-	-	-	1	1
	Adjusting fork	1	1	1	1	1	1

Coupling complete NEMA

Motor/pump shaft diameter	Kit No
41.2/22	*96417004*
47.6/22	*96417020*

Content

Pos.	Description	Quantity
10a	Coupling half	2
9	Hexagon socket head screw	4
	Adjusting fork	1

Plug

Pos.	Kit No	*96505136*
	Description	**EPDM/FKM**
18	Air vent screw	1
23	Pipe plug	1
25	Pipe plug	4
38	O-ring 16.3 x 2.4	4
100	O-ring 16.3 x 2.4	2

CR, CRN 90

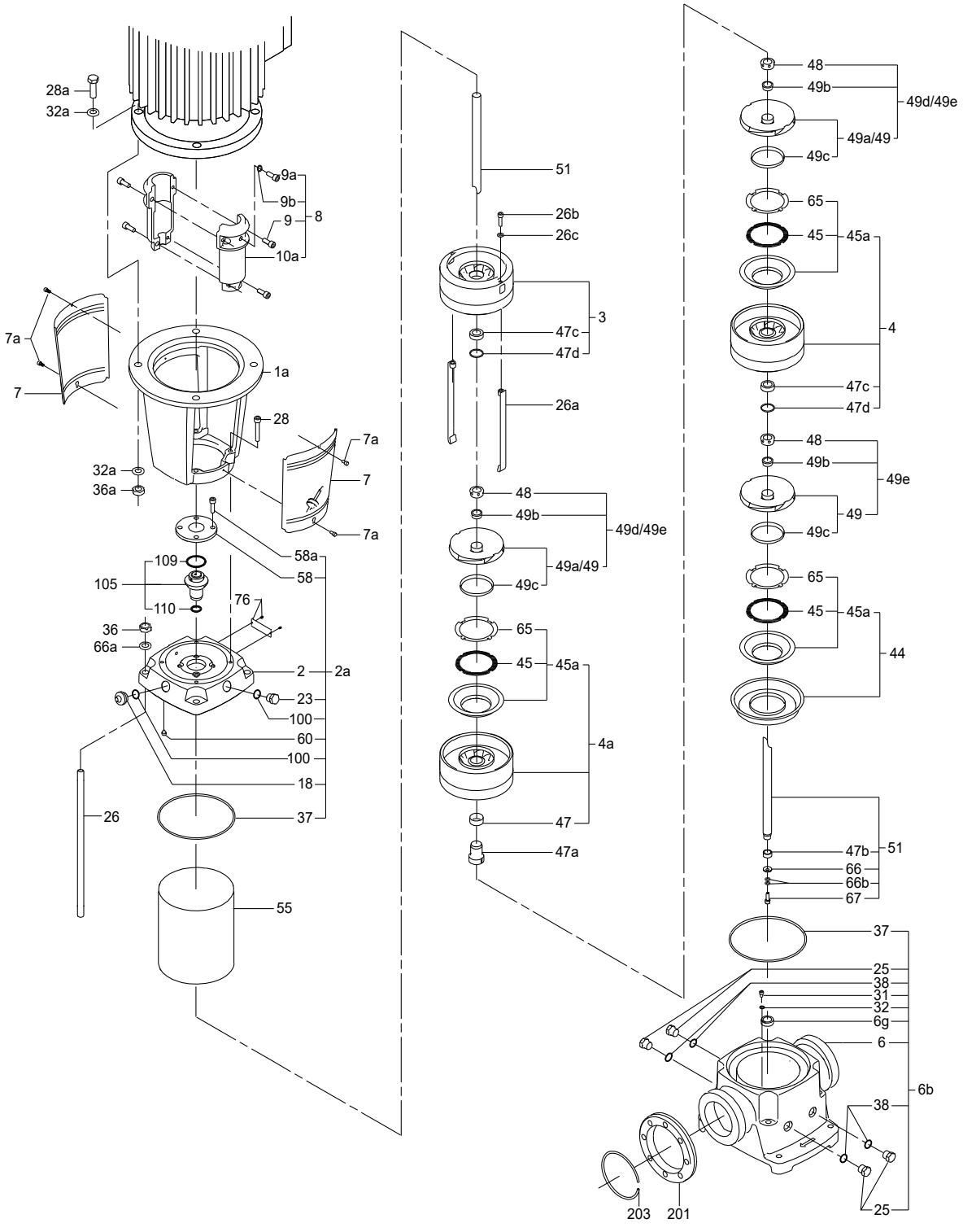
28a
32a
9a
9b
9
8
10a
7a
7
1a
28
32a
36a
7a
7
7a
58a
58
109
105
110
76
36
66a
2
2a
23
100
60
100
18
26
37
55
51
26b
26c
3
47c
47d
26a
48
49b
49d/49e
49a/49
49c
65
45
45a
4a
47
47a
48
49b
49d/49e
49a/49
49c
65
45
45a
4
47c
47d
48
49b
49e
49
49c
65
45
45a
44
47b
51
66
66b
67
37
25
38
31
32
6g
6
6b
38
25
203
201
TM022299

CR, CRN 90, model B

Chamber stack complete

Pumptype	CRN 90	CR 90
90-1	96458125	96416257
90-1-1	96458124	96416256
90-2	96458128	96416260
90-2-1	96458127	96416259
90-2-2	96458126	96416258
90-3	96458131	96416263
90-3-1	96458130	96416262
90-3-2	96458129	96416261
90-4	96458134	96416266
90-4-1	96458133	96416265
90-4-2	96458132	96416264
90-5	96458136	96416269
90-5-1	96493483	96416268
90-5-2	96458135	96416267
90-6	96458138	96416272
90-6-1	96465601	96416271
90-6-2	96458137	96416270

Content

Description	Quantity
Rotating assembly	1

Chamber with bearing

Type	Kit No	
	CR	CRN
SIC/SIC	98497515	98634157
Graflon/HM	98497516	98634158
Bronze/HM	98497517	98634159

Content

Pos.	Description	Quantity
4a	Chamber cpl.	1
47a	Rotating bearing	1

Coupling complete

Pos.	Kit No	96416591	96416592	96416593	96416594	96475477	96475478
	Motor/pump shaft diameter [mm]	38/22	42/22	48/22	55/22	42/22	48/22
	Description					For shafts with key and key-way	
10a	Coupling half	2	2	2	2	2	2
9	Hexagon socket head screw	4	4	4	4	4	4
9a	Hexagon socket head screw	-	-	-	-	1	1
9b	Washer	-	-	-	-	1	1
	Adjusting fork	1	1	1	1	1	1

Coupling complete NEMA

Motor/pump shaft diameter	Kit No
41.2/22	96417004
47.6/22	96417020

Content

Pos.	Description	Quantity
10a	Coupling half	2
9	Hexagon socket head screw	4
	Adjusting fork	1

Coupling guard

Pos.	Kit No	96505134	96505135
	Description	MG 90 - MG 132	MG 160 - MG 225
7	Coupling guard	2	2
7a	Screw	4	4

Impeller

Kit No	
CR	CRN
98497518	98635108

Content

Pos.	Description	Quantity
49	Impeller	1
48	Nut	1
48	Nut with slot	1
49b	Split cone	1

Impeller reduced

Kit No	
CR	CRN
98635110	98635123

Content

Pos.	Description	Quantity
49	Impeller	1
48	Nut	1
48	Nut with slot	1
49b	Split cone	1

Impeller 1. stage

Type	Standard	Reduced
Standard	98593752	98593755
Teflon	98593759	98593761
Electro pol.	98593764	98593769

Content

Pos.	Description	Quantity
49	Impeller	1
44	Suction interconnector	1
48	Nut for hub with spring	1

CR, CRN 90, model B

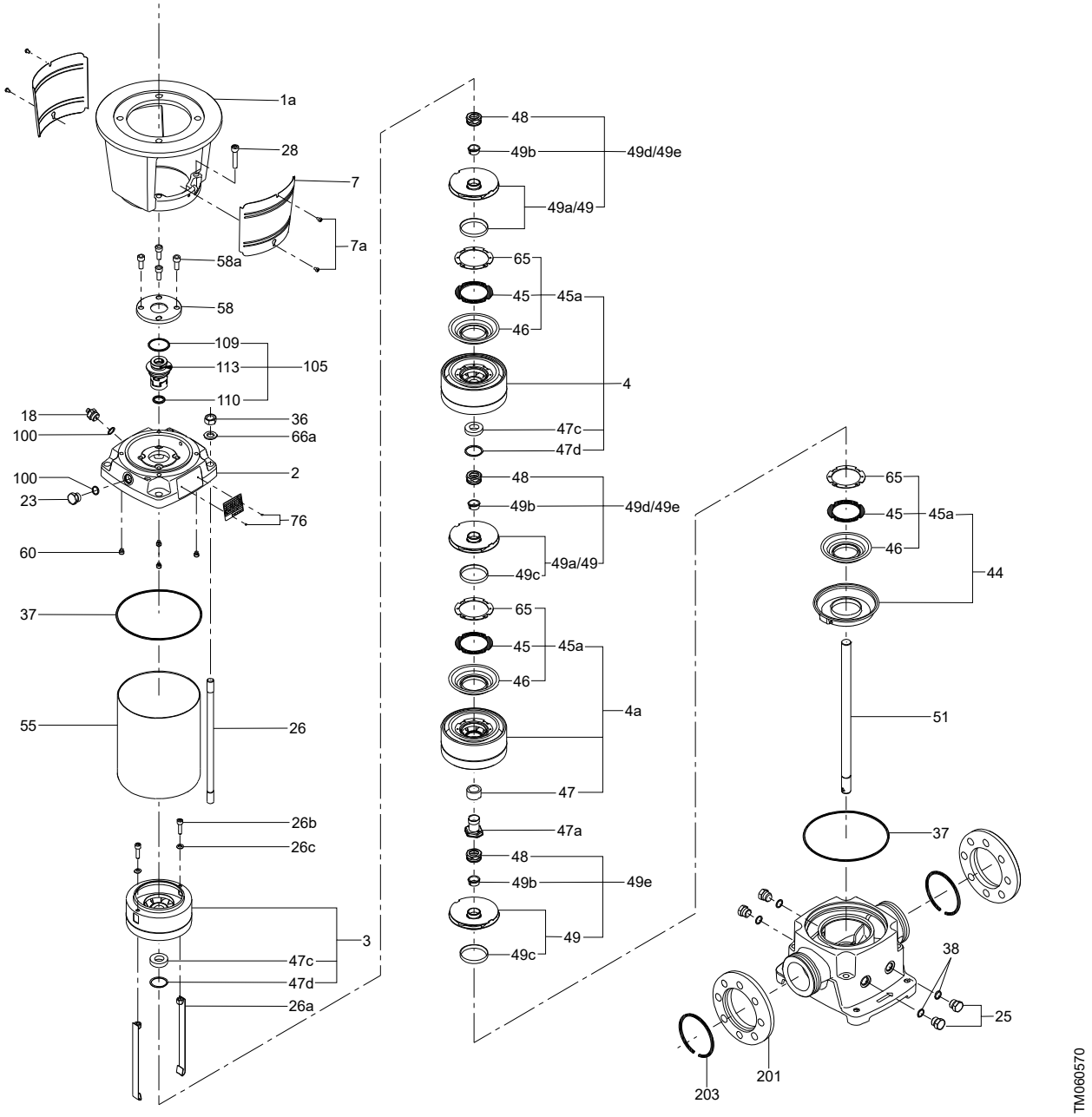

O-ring

Description	Kit No
EPDM	*96416601*
FKM	*96416602*

Content

Pos.	Description	Quantity
37	O-ring	2
38	O-ring	4
60	Spring (rubber)	4
100	O-ring	2
109	O-ring	1
110	O-ring	1
-	Adjusting fork (shaft seal)	1

Plug

Pos.	Kit No	***96505136***
	Description	EPDM/FKM
18	Air vent screw	1
23	Pipe plug	1
25	Pipe plug	4
38	O-ring 16.3 x 2.4	4
100	O-ring 16.3 x 2.4	2

Shaft seal

Description	Kit No
HQQE	*96525458*
HQQV	*96525490*
HQQK	*96533369*
HQQF	*96533412*
HQBE	*96525457*
HQBV	*96525459*
HUBK	*96533365*
HUBF	*96533366*
HUUE	*96436727*
HUUV	*96436728*
HUUK	*96533367*
HUUF	*96533368*

Content

Pos.	Description	Quantity
105	Shaft seal	1

Spare chamber

Type	Kit No	
	CR	CRN
Graflon	*98497519*	*98635126*
Teflon	*98497520*	*98635129*
Bronze	*98497521*	*98497521*

Content

Pos.	Description	Quantity
4	chamber with bush	1

Spare upper chamber

Type	Kit No	
	CR	CRN
Graflon	*98635130*	*98635152*
Teflon	*98635142*	*98635157*
Bronze	*98635145*	*98635145*

Content

Pos.	Description	Quantity
3	Upper chamber with bush	1

Wear parts

Type		Kit No
Graflon	1-2	*98497509*
	3-6	*98497510*
Teflon	1-2	*98497511*
	3-6	*98497512*
Bronze	1-2	*98497513*
	3-6	*98497514*

Content

Pos.	Description	Stages	Quantity
45	Seal ring	1-2	2
		3-6	6
47c	Bush	1-2	1
		3-6	4
47d	Lock ring	1-2	2
		3-6	6
49c	Wear ring	1-2	1
		3-6	5
-	Wear ring, N	1-2	1
		3-6	1
65	Top for neck ring N	1-2	2
		3-6	6
-	Adjusting fork	1-2	1
		3-6	

Upper chamber with bearing

Type	Kit No	
	CR	CRN
SIC/SIC	*98634160*	*98635099*
HY49/HM	*98635091*	*98635100*
Bronze/HM	*98635095*	*98635104*

Content

Pos.	Description	Quantity
3	Upper chamber cpl.	1
47a	Bearing cpl.	1

CR, CRN 90, model B

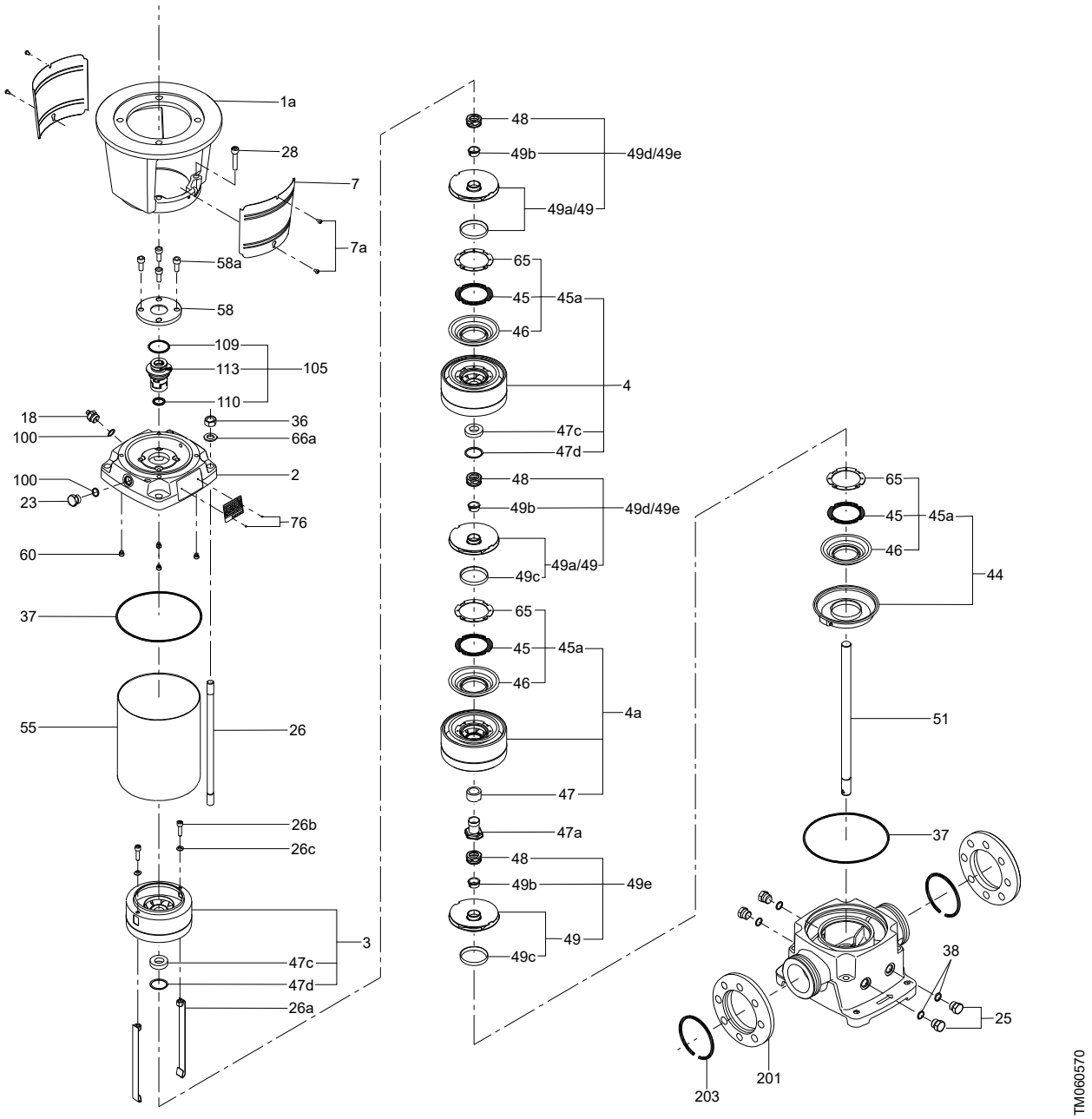

CR, CRN 120, 150
50/60 Hz

Bearing

Pos.	Description / number of stages	1-7
	Kit No	***96752215***
47b	Bearing ring, rotating	1
	Adjusting fork	2
47e	Washer	2

Coupling guard

Pos.	Description	MG 160 - MMG 280S / 254 TC - 405 TSC
	Kit No	***96505135***
7	Coupling guard	2
7a	Screw	4

O-ring

Pos.	Description		EPDM	FKM
	Kit No		***95059804***	***95059805***
37	O-ring		2	2
38	O-ring		4	4
60	Spring (PTFE)		4	4
100	O-ring		2	2
109	O-ring	22 mm shaft seal	1	1
		32 mm shaft seal	1	1
110	O-ring	22 mm shaft seal	1	1
		32 mm shaft seal	1	1
	Adjusting fork	∅22	1	1
	Adjusting fork	∅32	1	1

Shaft seal

22 mm

Description	Kit No
HQQE	*96525458*
HQQV	*96525490*
HQQK	*96533369*
HQQF	*96533412*
HQBE	*96525457*
HQBV	*96525459*
HUBK	*96533365*
HUBF	*96533366*
HUUE	*96436727*
HUUV	*96436728*
HUUK	*96533367*
HUUF	*96533368*

Content

Pos.	Description	Quantity
105	Shaft seal	1

22 mm, de-oiled

Description	Kit No
HUUE	*96502869*
HQQE	*96502910*
HUUK	*96502911*
HQQK	*96502912*
HUUV	*96124905*
HQQV	*96124906*

Content

Pos.	Description	Quantity
105	Shaft seal	1

32 mm

Description	Kit No
HBQE	*95059800*
HBQV	*95059801*
HQQE	*95059802*
HQQV	*95059803*

Content

Pos.	Description	Quantity
105	Shaft seal	1

32 mm, de-oiled

Description	Kit No
HQQE	*95059876*
HQQV	*95059877*

Content

Pos.	Description	Quantity
105	Shaft seal	1

Wear parts

Pos.	Description / number of stages	CR, CRN 120			CR, CRN 150		
		1	2-4	5-7	1	2-3	4-6
	Kit No	*95059806*	*95059807*	*95059808*	*95059809*	*95059810*	*95059811*
7a	Screw	3	12	21	3	9	18
45	Seal ring (PTFE)	-	3	6	-	2	5
45b	Seal ring (PTFE)	1	1	1	1	1	1
47b	Bearing ring, rotating	1	1	1	1	1	1
47c	Support bearing (HY49)	-	3	6	-	2	5
47d	Lock ring	-	6	12	-	4	10
47e	Washer	2	2	2	2	2	2
65	Seal retainer	-	3	6	-	2	5
65a	Seal retainer	1	1	1	1	1	1
72	Wear ring	1	4	7	1	3	6
-	Adjusting fork	1	2	2	1	2	2

CR, CRN 120, 150

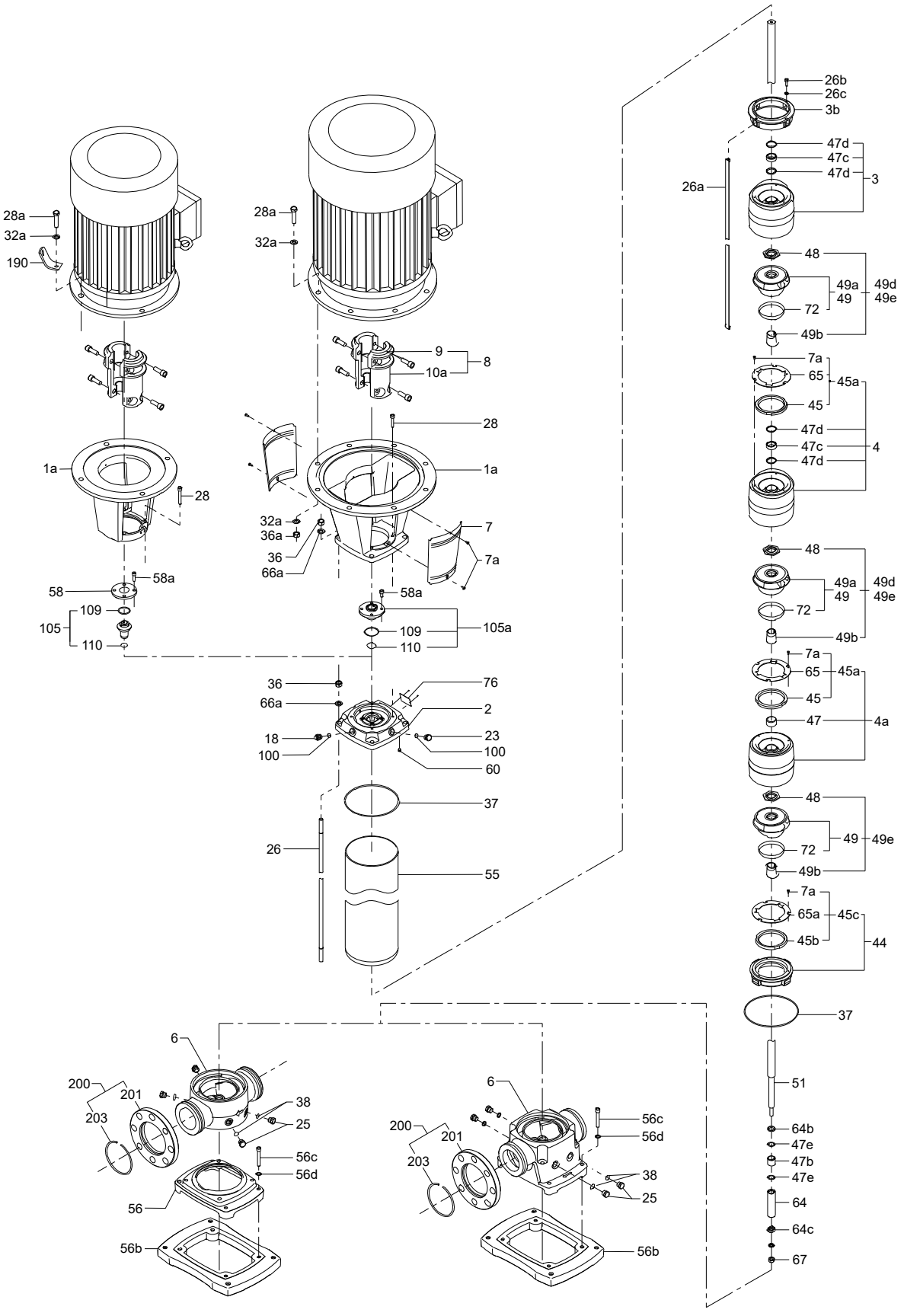

Chamber stack complete

Pump type	120-1-1	120-1	120-2-2	120-2-1	120-2	120-3-2	120-3-1	120-3	120-3	120-4-2	120-4-2	120-4-1
	< 55 kW	< 55 kW	< 55 kW	< 55 kW	< 55 kW	< 55 kW	< 55 kW	< 55 kW	≥ 55 kW	< 55 kW	≥ 55 kW	< 55 kW
CR 120	*96925133*	*95059816*	*95059817*	*95059818*	*95059819*	*96925134*	*95059820*	*95059821*	*95059868*	*96798242*	*95059822*	*95059823*
CRN 120	*96925135*	*95059829*	*95059830*	*95059831*	*95059832*	*96925136*	*95059833*	*95059834*	*95059871*	*96798247*	*95059835*	*95059836*
Chamber stack	1	1	1	1	1	1	1	1	1	1	1	1

Pump type	120-4-1	120-4	120-4	120-5-2	120-5-2	120-5-1	120-5-1	120-6-1	120-6-1	120-7	120-7
	≥ 55 kW	< 55 kW	≥ 55 kW	< 55 kW	≥ 55 kW	< 55 kW	≥ 55 kW	< 55 kW	≥ 55 kW	< 55 kW	≥ 55 kW
CR 120	*95059869*	*96798243*	*95059824*	*96798244*	*95059870*	*95059825*	*95059826*	*96798245*	*95059827*	*96798246*	*95059828*
CRN 120	*95059872*	*96798248*	*95059837*	*96798249*	*95059873*	*95059838*	*95059839*	*96798250*	*95059840*	*96798251*	*95059841*
Chamber stack	1	1	1	1	1	1	1	1	1	1	1

Pump type	150-1-1	150-1	150-2-2	150-2-1	150-2	150-3-1	150-3-1	150-3-2	150-3-2	150-3
	< 55 kW	< 55 kW	< 55 kW	< 55 kW	< 55 kW	< 55 kW	≥ 55 kW	< 55 kW	≥ 55 kW	< 55 kW
CR 150	*95059842*	*95059843*	*95059844*	*95059845*	*95059846*	*96925137*	*96925138*	*95059847*	*95059848*	*95059849*
CRN 150	*95059855*	*95059856*	*95059857*	*95059858*	*95059859*	*96925139*	*96925140*	*95059860*	*95059861*	*95059862*
Chamber stack	1	1	1	1	1	1	1	1	1	1

Pump type	150-3	150-4-2	150-4-2	150-4-1	150-4-1	150-5-2	150-5-2	150-6	150-6
	≥ 55 kW	< 55 kW	≥ 55 kW	< 55 kW	≥ 55 kW	< 55 kW	≥ 55 kW	< 55 kW	≥ 55 kW
CR 150	*95059850*	*96798252*	*95059874*	*95059851*	*95059852*	*96798253*	*95059853*	*96798254*	*95059854*
CRN 150	*95059863*	*96798255*	*95059875*	*95059864*	*95059865*	*96798256*	*95059866*	*96798257*	*95059867*
Chamber stack	1	1	1	1	1	1	1	1	1

Chamber complete with bearing, pos. 47

Pos.	Pump type	120	150	120	150
	For number of stages	**1**	**1**	**2-7**	**2-6**
	CR	*96751986*	*96751988*	*96751982*	*96751984*
	CRN	*96751987*	*96751989*	*96751983*	*96751985*
4a	Chamber with SIC bearing, pos. 47	-	-	1	1
-	Top chamber with SIC bearing, pos. 47	1	1	-	-

Coupling

Pos.	Motor frame size	MG 160	MMG 180	MMG 200/225	MMG 250M	MMG 280S
	Motor/pump shaft diameter [mm]	**42/22**	**48/22**	**55/22**	**60/32**	**65/32**
	Description	**IEC**	**IEC**	**IEC**	**IEC**	**IEC**
	Kit No	*96416592*	*96416593*	*96416594*	*95059812*	*95059813*
10a	Coupling half	2	2	2	2	2
9	Hexagon socket head screw	4	4	4	4	4
	Adjusting fork	1	1	1	1	1

Pos.	Motor frame size	254/256 TC & 284/286 TSC	324/326 TSC & 364/365 TSC	364/365 TSC	405 TSC
	Motor/pump shaft diameter [mm]	**41.2/22**	**47.55/22**	**47.55/32**	**53.9/32**
	Description	**NEMA**	**NEMA**	**NEMA**	**NEMA**
	Kit No	*96417004*	*96417020*	*95059814*	*95059815*
10a	Coupling half	2	2	2	2
9	Hexagon socket head screw	4	4	4	4
	Adjusting fork	1	1	1	1

Plug

Pos.	Kit No	96505136
	Description	EPDM/FKM
18	Air vent screw	1
23	Pipe plug	1
25	Pipe plug	4
38	O-ring 16.3 x 2.4	4
100	O-ring 16.3 x 2.4	2

Sensor

Description	Kit No
0-4 bar	96428014
0-6 bar	96428015
0-10 bar	96428016
0-16 bar	96428017
0-25 bar	96428018

Shaft parts

Pos.	Pump type	120	120/150
	For number of stages	7	
	CR		
	Kit no.	97683114	98533480
47b	Bearing	1	-
47e	Washer	2	2
51	Shaft	1	-
64b	Washer	1	1
64	Spacing bush	1	-
64c	Spacer lower	1	1
66b	Washer	1	1
67	Nut	1	1

CR, CRN 120, 150

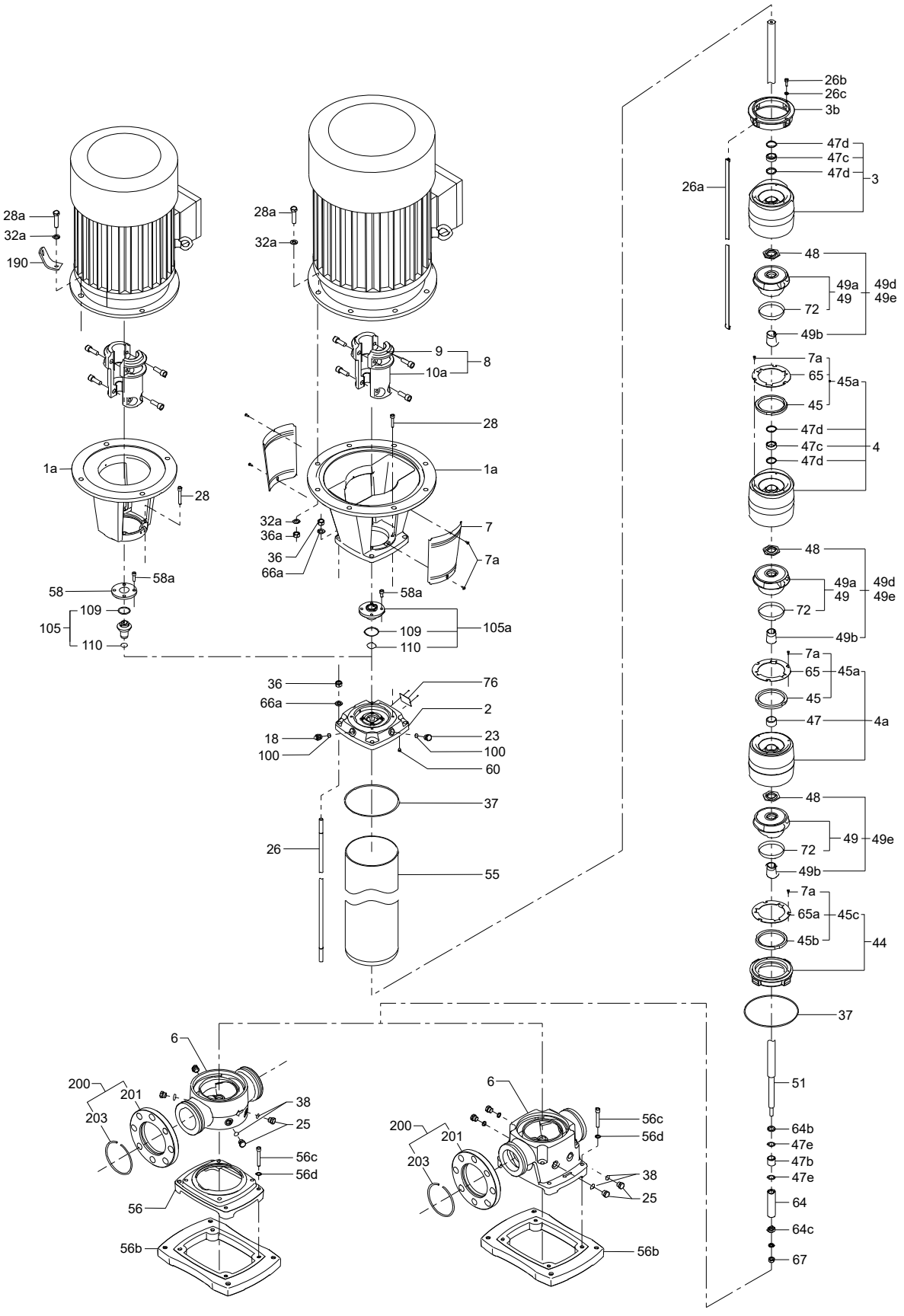

14. CR Air-cooled top

50/60 Hz

CR, CRI, CRN 1, 3, 5

Connecting pipe

Pos.		Description/ kit No		*96578704*
149	109a	O-ring	EPDM	1
			FXM	1
	109b	O-ring	FKM	1
	-	Connection pipe	-	1

O-ring

Pos.	Description/ kit No	FFKM	FXM
		96533328	*96463944*
37a	O-ring	2	2
38	O-ring	1	1
100		2	2
109a	O-ring	1	-
	O-ring	-	1

Sealing

Pos.	Description/ kit No		*96533329*
37a	O-ring	FXM	2
37b	O-ring	EPDM	1
38	O-ring	FXM	1
100	O-ring	EPDM	2

Pos.	Description/ kit No		*96533329*
100a	O-ring	EPDM	2
		FXM	2
109a	O-ring	FKM	1
109b	O-ring	EPDM	1

Shaft seal

Type	Kit No
HUBK	*96533322*
HUBF	*96533323*
HUUK	*96533324*
HUUF	*96533325*
HQQK	*96533326*
HQQF	*96533327*
HQBK	*96491375*

Content

Pos.	Description	Quantity
105	Shaft seal	1

CR, CRI, CRN 1, 3, 5, air-cooled top

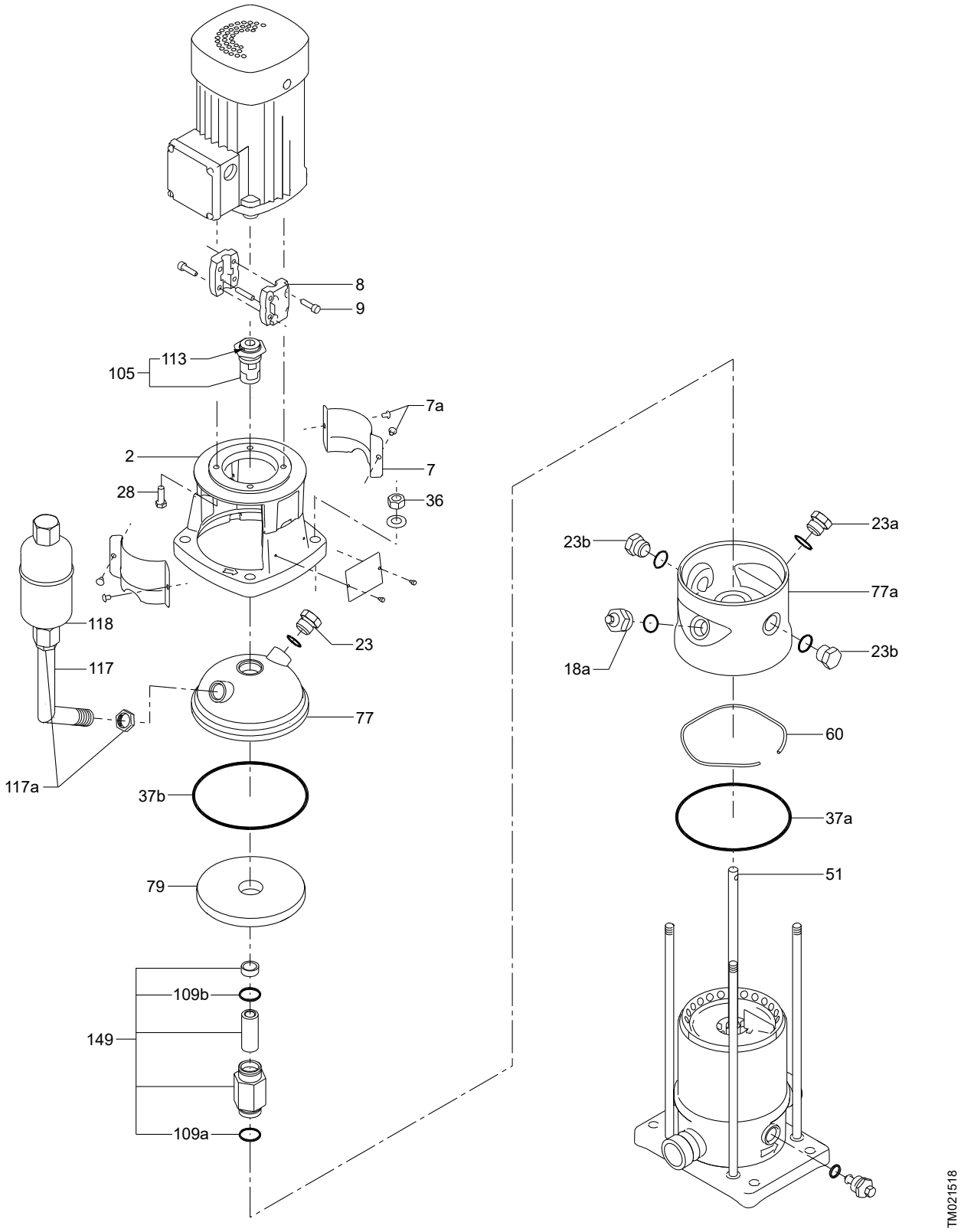

CR, CRI, CRN 10, 15, 20

O-ring

Pos.	Description	FFKM	FXM
	Kit No	*96533374*	*96534871*
37a	O-ring	2	2
38	O-ring	1	1
38a	O-ring	1	1
100	O-ring	2	2

O-ring

Rubber type	Kit No
EPDM	*96525419*
FKM	*96525431*
FXM/EPDM	*96525432*

Content

Pos.	Description		Quantity
37a	O-ring		2
37b	O-ring		1
37c	O-ring		1
38	O-ring		1
38a	O-ring		1
39	Gasket	oval flange CR 10	2
		FGJ flange CR 10	2
		FGJ flange CR 15, 20	2
60	Rubber spring		4
60a	Rubber spring		4
100	O-ring		1
100a	O-ring		2
109a	O-ring		1

Shaft seal

Type	Kit No
HQQE	*96511844*
HQQV	*96511845*
HQQK	*96511846*
HQQF	*96511847*
HUBK	*96511838*
HUUV	*96511841*
HUUK	*96511842*
HUUF	*96511843*

Content

Pos.	Description	Quantity
105	Shaft seal	1
-	Adjusting fork	1

Wear parts CRI, CRN 10

Pos.	Number of stages	1-8	9-14	16-22
	Description/ kit No	*96927653*	*96927678*	*96927679*
(4a)	Intermediate chamber cpl. w/ bearing	1	2	3
(26b)	Set screw	2	2	2
(26c)	Washer	2	2	2
(45)	Neck ring	7	12	19
(47a)	Bearing ring	1	2	3
(61)	Seal driver	1	1	1
(62)	Stop ring	1	1	1
(64a)	Spacer bush	1	2	3
(64d)	Spacer bush	1	2	3
(64c)	Spacer, lower	1	1	1
(65)	Upper seal ring	-	-	19
(66)	Lock washer	1	1	1
(67)	Lock nut	1	1	1

Wear parts CRI, CRN 10, Low NPSH

Pos.	Number of stages	2-7	8-15	16-21
	Description/ kit No	*96931050*	*96931051*	*96931082*
(4a)	Intermediate chamber cpl. w/ bearing	1	2	3
(26b)	Set screw	2	2	2
(26c)	Washer	2	2	2
(45)	Neck ring	6	14	18
(47a)	Bearing ring	1	2	3
(61)	Seal driver	1	1	1
(62)	Stop ring	1	1	1
(64a)	Spacer bush	1	2	3
(64d)	Spacer bush	1	2	3
(64b)	Spacing bush	1	1	1
(49c)	Impeller wear ring	1	1	1
(64c)	Spacer, lower	1	1	1
(65)	Upper seal ring	6	14	18
(66)	Lock washer	1	1	1
(67)	Lock nut	1	1	1

Wear parts CRI, CRN 15, 20

Pos.	Number of stages	1	2-6	7-10	12-17
	Kit No	***96928334***	***96928375***	***96928377***	***96928380***
(4a)	Intermediate chamber cpl. w/ bearing	1	1	2	3
(26b)	Set screw	2	2	2	2
(26c)	Washer	2	2	2	2
(45)	Neck ring	1	5	8	14
(47a)	Bearing ring	1	1	2	3
(49c)	Impeller wear ring	1	6	10	17
(61)	Seal driver	1	1	1	1
(62)	Stop ring	1	1	1	1
(64a)	Spacing bush	-	-	2	3
	Spacing bush	1	-	-	-
(64b)	Spacing bush	1	1	1	1
(64c)	Spacer, lower	1	1	1	1
(64d)	Spacing bush	1	1	2	3
(65)	Upper seal ring	1	5	8	14
(66)	Lock washer	1	1	1	1
(67)	Lock nut	1	1	1	1

Wear parts CRI, CRN 15, 20, Low NPSH

Pos.	Number of stages	2-6	7-10	12-17
	Kit No	***96928443***	***96928448***	***96928449***
(4a)	Intermediate chamber cpl. w/ bearing	1	2	3
(26b)	Set screw	2	2	2
(26c)	Washer	2	2	2
(45)	Neck ring	4	7	13
	Seal ring	1	1	1
(47a)	Bearing ring	1	2	3
(49c)	Wear ring N	1	1	1
	Impeller wear ring	5	9	16
(61)	Seal driver	1	1	1
(62)	Stop ring	1	1	1
(64a)	Spacing bush	1	2	3
(64b)	Spacing bush	1	1	1
	Spacing bush	1	1	1
(64c)	Spacer, lower	1	1	1
(64d)	Spacing bush	-	-	2
(65)	Upper seal ring	4	7	13
	Top for neck ring	1	1	1
(66)	Lock washer	1	1	1
(67)	Lock nut	1	1	1

CR, CRI, CRN 10, 15, 20, air-cooled top

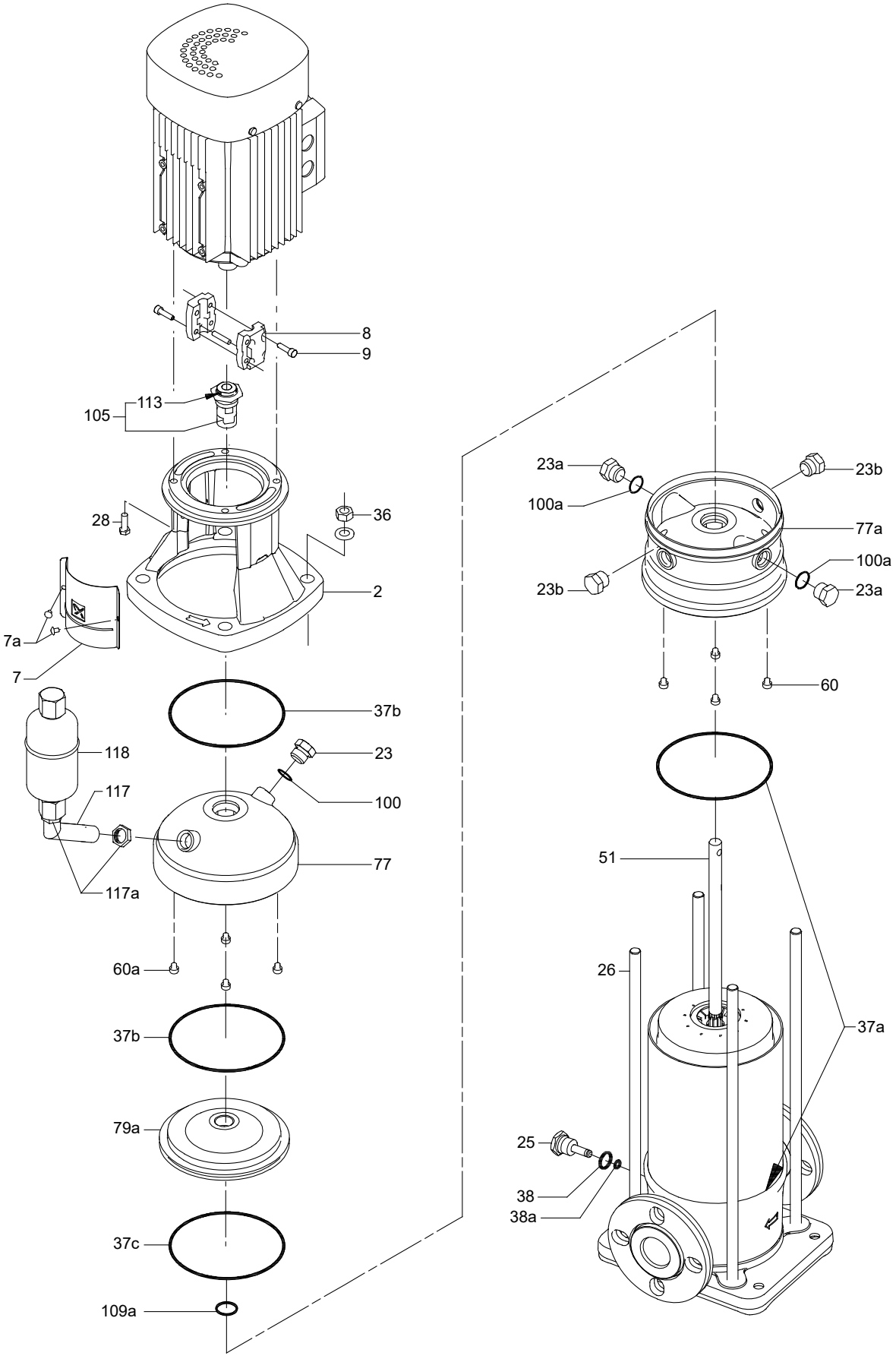

CR, CRI, CRN 32, 45, 64, 90

Connecting pipe

Pos.	Description	Rubber	EPDM/FKM	FXM
		Kit No	*96578685*	*96578686*
109a, 109b	O-ring	FXM	-	2
		EPDM	2	-
		FKM	2	-
149	Connecting pipe		1	1

O-ring, CR(N) 32

Pos	Kit No		*96578670*	*96578671*	*96578672*
	Description	Rubber	EPDM	FKM	FXM
37	O-ring	EPDM	2	-	-
		FKM	-	2	-
		FXM	-	-	2
37b	O-ring	EPDM	-	-	-
		FKM	2	-	2
38	O-ring	EPDM	1	-	-
		FKM	-	1	-
		FXM	-	-	1
60	Spring	EPDM	4	-	-
		FKM	-	4	-
		PTFE	-	-	4
100	O-ring	EPDM	2	-	1
		FKM	-	2	-
100a	O-ring	EPDM	4	-	-
		FKM	-	4	-
		FXM	-	-	4
109	O-ring	EPDM	1	-	1
		FKM	-	1	-
		FXM	-	-	2
109a	O-ring	EPDM	1	-	-
		FKM	-	1	-
109b	O-ring	EPDM	1	-	-
		FKM	-	1	-
110	O-ring	EPDM	1	-	1
		FKM	-	1	-
-	Adjusting fork		1	1	1

O-ring, CR(N) 45/64

Pos	Kit No		*96578673*	*96578674*	*96578675*
	Description	Rubber	EPDM	FKM	FXM
37	O-ring	EPDM	2	-	-
		FKM	-	2	-
		FXM	-	-	2
37b	O-ring	EPDM	-	-	-
		FKM	2	-	2
38	O-ring	EPDM	1	-	-
		FKM	-	1	-
		FXM	-	-	1
60	Spring	EPDM	4	-	-
		FKM	-	4	-
		PTFE	-	-	4
100	O-ring	EPDM	2	-	1
		FKM	-	2	-
100a	O-ring	EPDM	4	-	-
		FKM	-	4	-
		FXM	-	-	4
109	O-ring	EPDM	1	-	1
		FKM	-	1	-
		FXM	-	-	2
109a	O-ring	EPDM	1	-	-
		FKM	-	1	-
109b	O-ring	EPDM	1	-	-
		FKM	-	1	-
110	O-ring	EPDM	1	-	1
		FKM	-	1	-
-	Adjusting fork		1	1	1

O-ring, CR(N) 90

Pos	Kit No		96578676	96578677	96578678
	Description	Rubber	EPDM	FKM	FXM
37	O-ring	EPDM	2	-	-
		FKM	-	2	-
		FXM	-	-	2
37b	O-ring	EPDM	-	-	-
		FKM	2	-	2
38	O-ring	EPDM	1	-	-
		FKM	-	1	-
		FXM	-	-	1
60	Spring	EPDM	4	-	-
		FKM	-	4	-
		PTFE	-	-	4
100	O-ring	EPDM	2	-	1
		FKM	-	2	-
100a	O-ring	EPDM	4	-	-
		FKM	-	4	-
		FXM	-	-	4
109	O-ring	EPDM	1	-	1
		FKM	-	1	-
		FXM	-	-	2
109a	O-ring	EPDM	1	-	-
		FKM	-	1	-
109b	O-ring	EPDM	1	-	-
		FKM	-	1	-
110	O-ring	EPDM	1	-	1
		FKM	-	1	-
-	Adjusting fork		1	1	1

CR, CRI, CRN 32, 45, 64, 90, air-cooled top

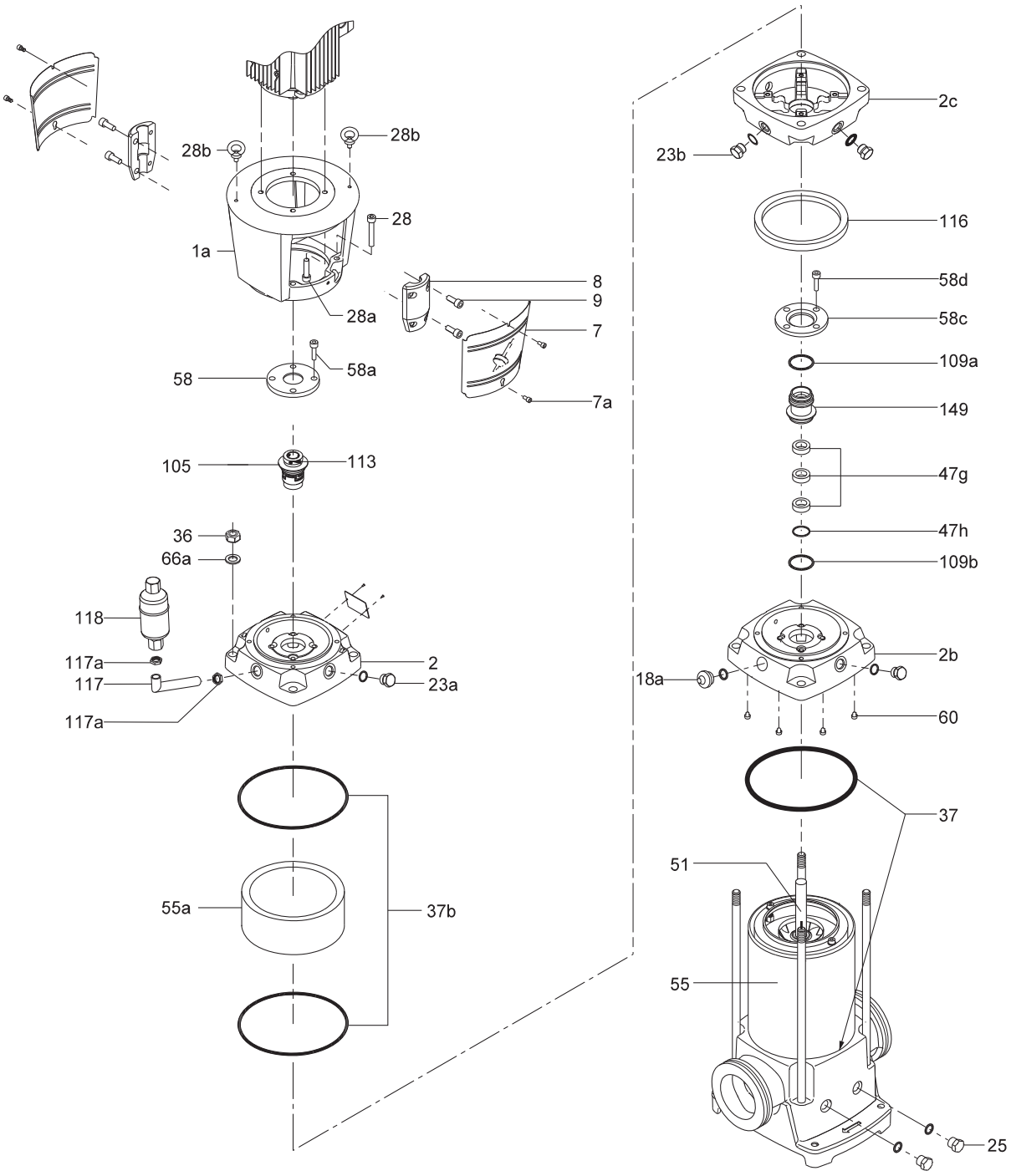

TM058189

CR, CRI, CRN 32, 45, 64, 90, model B

Air vent

Kit	Vertical	Horizontal
Air vent	*98593444*	*98593449*

Content

Pos.	Description	Quantity
	Air vent	1
	Nut	2
	Pipe	1

O-ring, CR(N) 32

Pos	Kit No		*98593477*	*98593480*	*98593491*	*98593493*	*98593494*
	Description	**Rubber**	**EPDM**	**FKM**	**FXM**	**FXM/EPDM**	**FXM/FKM**
	O-ring	EPDM	1			1	
		FKM		1			1
		FXM			1		
	O-ring	EPDM	1			1	
		FKM		1			1
		FXM			1		
	O-ring	EPDM	1		1	1	
		FKM		1			1
	O-ring	EPDM	1				
		FKM		1			
		FXM			1	1	1
	O-ring	EPDM	2				
		FKM		2			
		FXM			2	2	2
	O-ring	EPDM	2				
		FKM		2			
		FXM			2	2	2
	O-ring	EPDM	4				
		FKM		4			
		FXM			4	4	4
	Spring	PTFE	8	8	8	8	8
	Adjusting fork		1	1	1	1	1

O-ring, CR(N) 45/64

Pos	Kit No		98593495	98593496	98593499	98593512	98593513
	Description	Rubber	EPDM	FKM	FXM	FXM/EPDM	FXM/FKM
	O-ring	EPDM	1			1	
		FKM		1			1
		FXM			1		
	O-ring	EPDM	1			1	
		FKM		1			1
		FXM			1		
	O-ring	EPDM	1		1	1	
		FKM		1			1
		FXM					
	O-ring	EPDM	1				
		FKM		1			
		FXM			1	1	1
	O-ring	EPDM	2				
		FKM		2			
		FXM			2	2	2
	O-ring	EPDM	2				
		FKM		2			
		FXM			2	2	2
	O-ring	EPDM	4				
		FKM		4			
		FXM			4	4	4
	Spring	PTFE	8	8	8	8	8
	Adjusting fork		1	1	1	1	1

CR, CRI, CRN 32, 45, 64, 90, model B

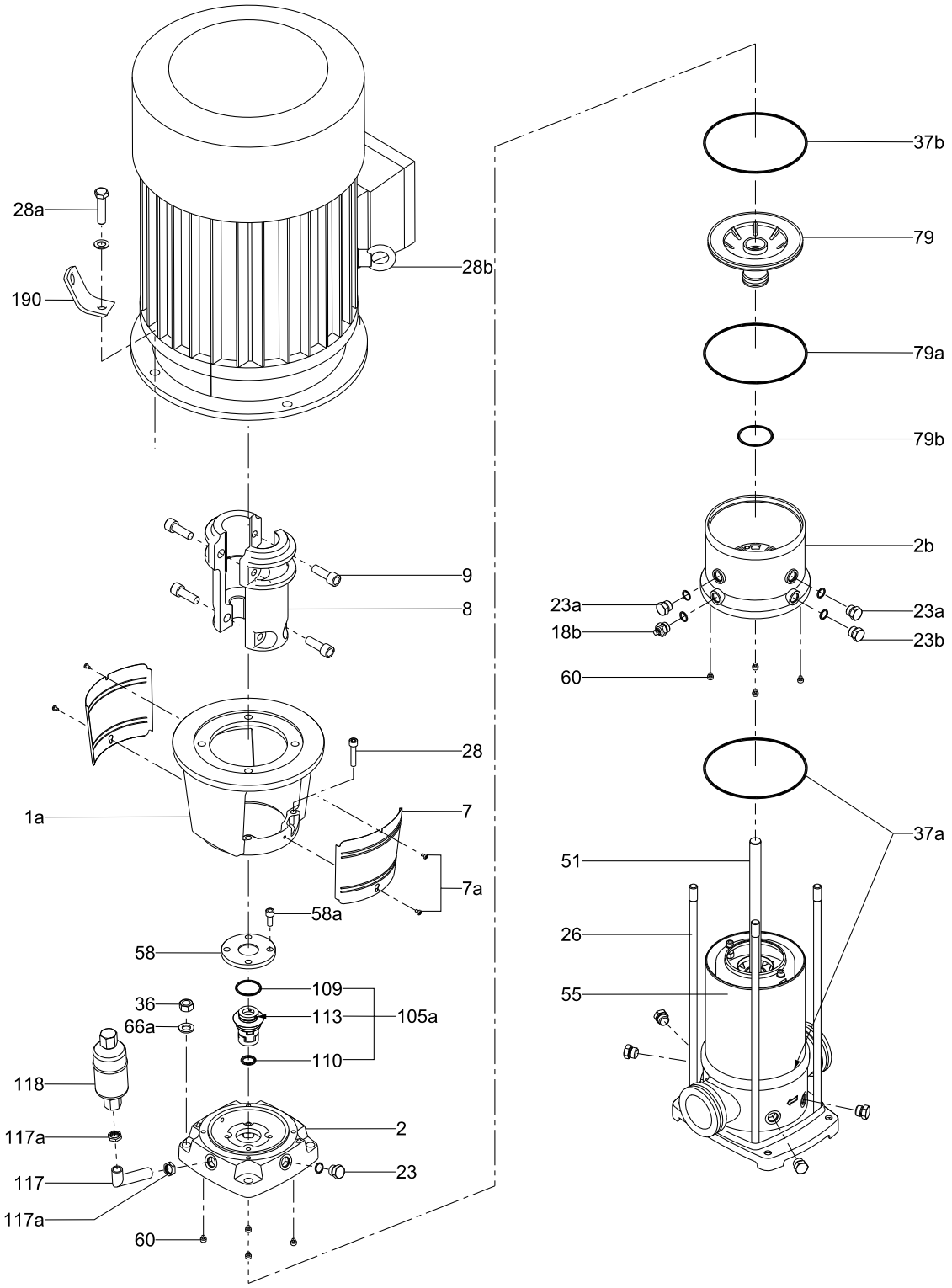

CR, CRI, CRN 32, 45, 64, 90, model B

O-ring, CR(N) 90

Pos	Kit No		98593514	98593516	98593517	98593519	98593541
	Description	Rubber	EPDM	FKM	FXM	FXM/EPDM	FXM/FKM
	O-ring	EPDM	1			1	
		FKM		1			1
		FXM			1		
	O-ring	EPDM	1			1	
		FKM		1			1
		FXM			1		
	O-ring	EPDM	1		1	1	
		FKM		1			1
		FXM					
	O-ring	EPDM	1				
		FKM		1			
		FXM			1	1	1
	O-ring	EPDM	2				
		FKM		2			
		FXM			2	2	2
	O-ring	EPDM	2				
		FKM		2			
		FXM			2	2	2
	O-ring	EPDM	4				
		FKM		4			
		FXM			4	4	4
	Spring	PTFE	8	8	8	8	8
	Adjusting fork		1	1	1	1	1

Plug

Pos	Description/ Kit No	98593644
	Plug	2
	Air vent screw	1
	Plug	1
	O-ring	4
	O-ring	4
	O-ring	4

Cover

Pos	Description/ Kit No	98593648
	Cover N	1
	Cap Screw	4

CR, CRI, CRN 32, 45, 64, 90, model B

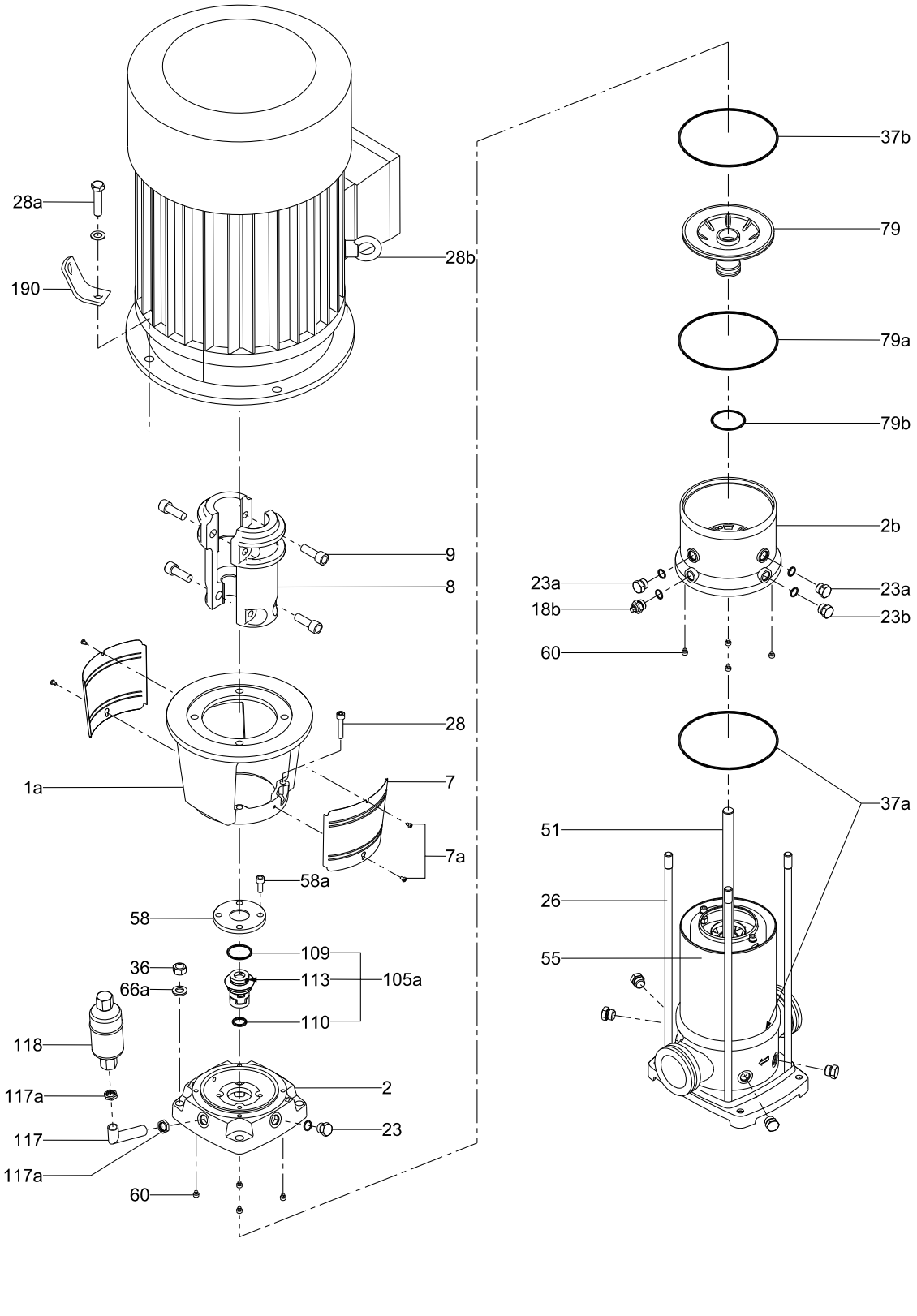

15. CR Back to back

50/60 Hz

CR, CRI, CRN 1, 3, 5

O-ring

Pos.	Description/ kit No	FFKM	FXM
		96533328	*96463944*
37a	O-ring	2	2
38	O-ring	1	1
100	O-ring	2	2
109a	O-ring	1	1

Sealing

Pos.	Description	Kit No	*96533360*	*96533361*
37a	O-ring	EPDM	2	-
		FKM	-	2
37b	O-ring	EPDM	1	-
		FKM	-	1
38	O-ring	EPDM	1	-
		FKM	-	1
100	O-ring	EPDM	2	-
		FKM	-	2
100a	O-ring	EPDM	4	-
		FKM	-	4
105b	Shaft seal	AQQE	1	-
		AQQV	-	1
109a	O-ring	EPDM	1	-
		FKM	-	1
112a	Driver		1	1
113	Set screw		2	2
146	Hexagon socket head screw		3	3

Shaft seal

Type	Kit No
HUBK	*96533322*
HUBF	*96533323*
HUUK	*96533324*
HUUF	*96533325*
HQQK	*96533326*
HQQF	*96533327*
HQBK	*96491375*

Content

Pos.	Description	Quantity
105	Shaft seal	1

Shaft seal

Pos.	Description	OQQV
	Kit No	*96989183*
105b	Shaft seal	1
112a	Driver	1
113	Set screw	2

CR, CRI, CRN 1, 3, 5, back to back

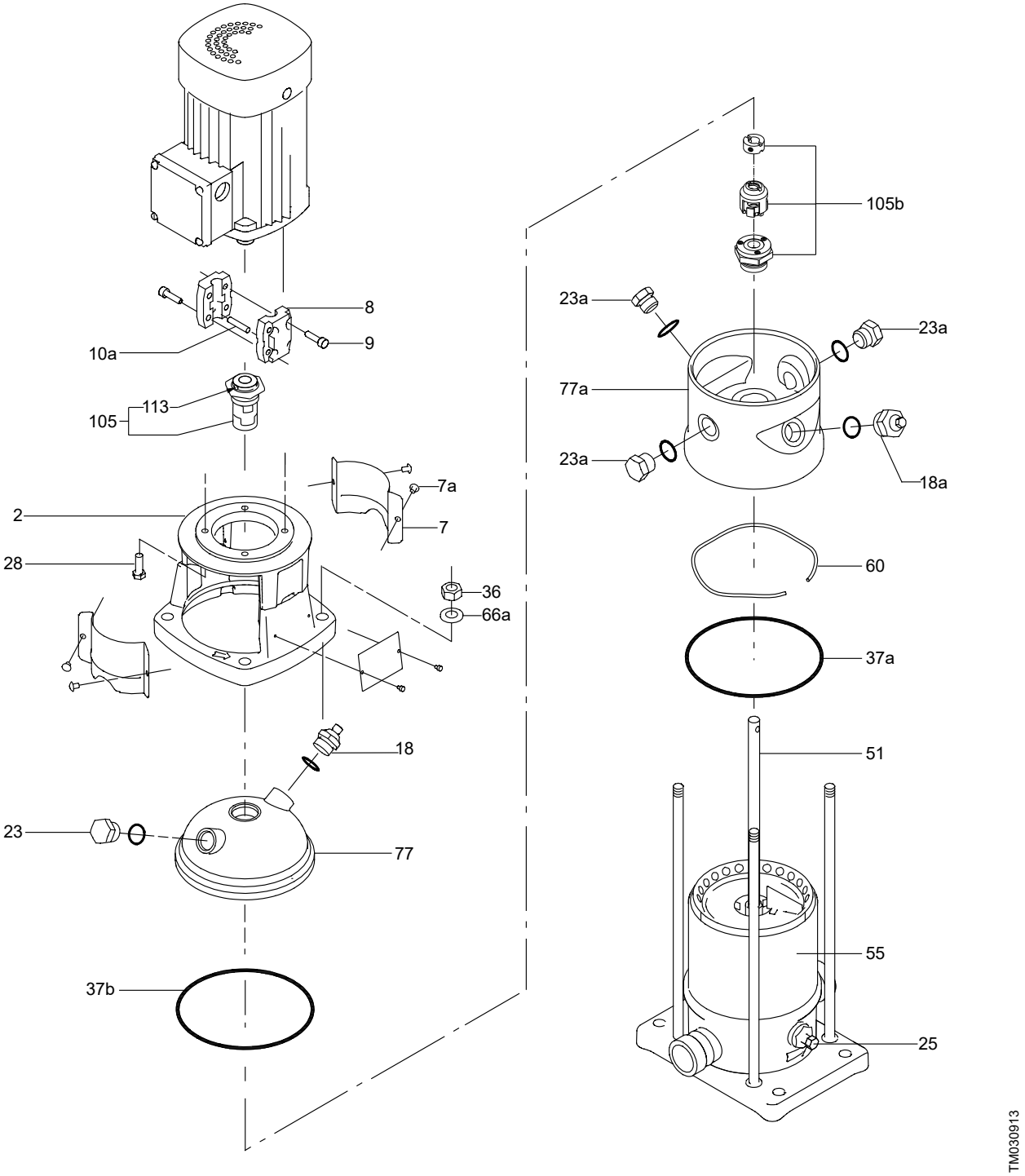

CR, CRI, CRN 10, 15, 20

O-ring

Pos.	Description	FFKM	FXM
	Kit No	*96533374*	*96534871*
37a	O-ring	2	2
38	O-ring	1	1
38a	O-ring	1	1
100	O-ring	2	2

O-ring, EPDM

Pos.	Description		Kit No	*96525433*
37a	O-ring		EPDM	2
37b	O-ring		EPDM	1
38	O-ring		EPDM	1
38a	O-ring		EPDM	1
39	Gasket	oval flange CR 10	KLINGERsil C-4430	2
		FGJ flange CR 10		2
		FGJ flange CR 15, 20		2
60	Rubber spring		EPDM	4
100	O-ring		EPDM	2
100a	O-ring		EPDM	2
100b	O-ring		EPDM	2

O-ring, FKM

Pos.	Description		Kit No	*96525434*
37a	O-ring		FKM	2
37b	O-ring		FKM	1
38	O-ring		FKM	1
38a	O-ring		FKM	1
39	Gasket	oval flange CR 10	KLINGERsil C-4430	2
		FGJ flange CR 10		2
		FGJ flange CR 15, 20		2
60	Rubber spring		FKM	4
100	O-ring		FKM	2
100a	O-ring		FXM	2
100b	O-ring		FKM	2

O-ring, FFKM/EPDM

Pos.	Description		Kit No	*96525436*
37a	O-ring		FFKM	2
37b	O-ring		EPDM	1
38	O-ring		FFKM	1
38a	O-ring		FFKM	1
39	Gasket	oval flange CR 10	KLINGERsil C-4430	2
		FGJ flange CR 10		2
		FGJ flange CR 15, 20		2
60	Rubber spring		PTFE	4
100	O-ring		EPDM	1
100a	O-ring		FFKM	2
100b	O-ring		EPDM	2

O-ring, FFKM/FKM

Pos.	Description		Kit No	*96525436*
37a	O-ring		FFKM	2
37b	O-ring		FKM	1
38	O-ring		FFKM	1
38a	O-ring		FFKM	1
39	Gasket	oval flange CR 10	KLINGERsil C-4430	2
		FGJ flange CR 10		2
		FGJ flange CR 15, 20		2
60	Rubber spring		PTFE	4
100	O-ring		FKM	1
100a	O-ring		FFKM	2
100b	O-ring		FKM	2

Shaft seal

Type	Kit No
HQQE	*96511844*
HQQV	*96511845*
HQQK	*96511846*
HQQF	*96511847*
HUBK	*96511838*
HUUV	*96511841*
HUUK	*96511842*
HUUF	*96511843*

Content

Pos.	Description	Quantity
105	Shaft seal	1
-	Adjusting fork	1

CR, CRI, CRN 10, 15, 20, back to back

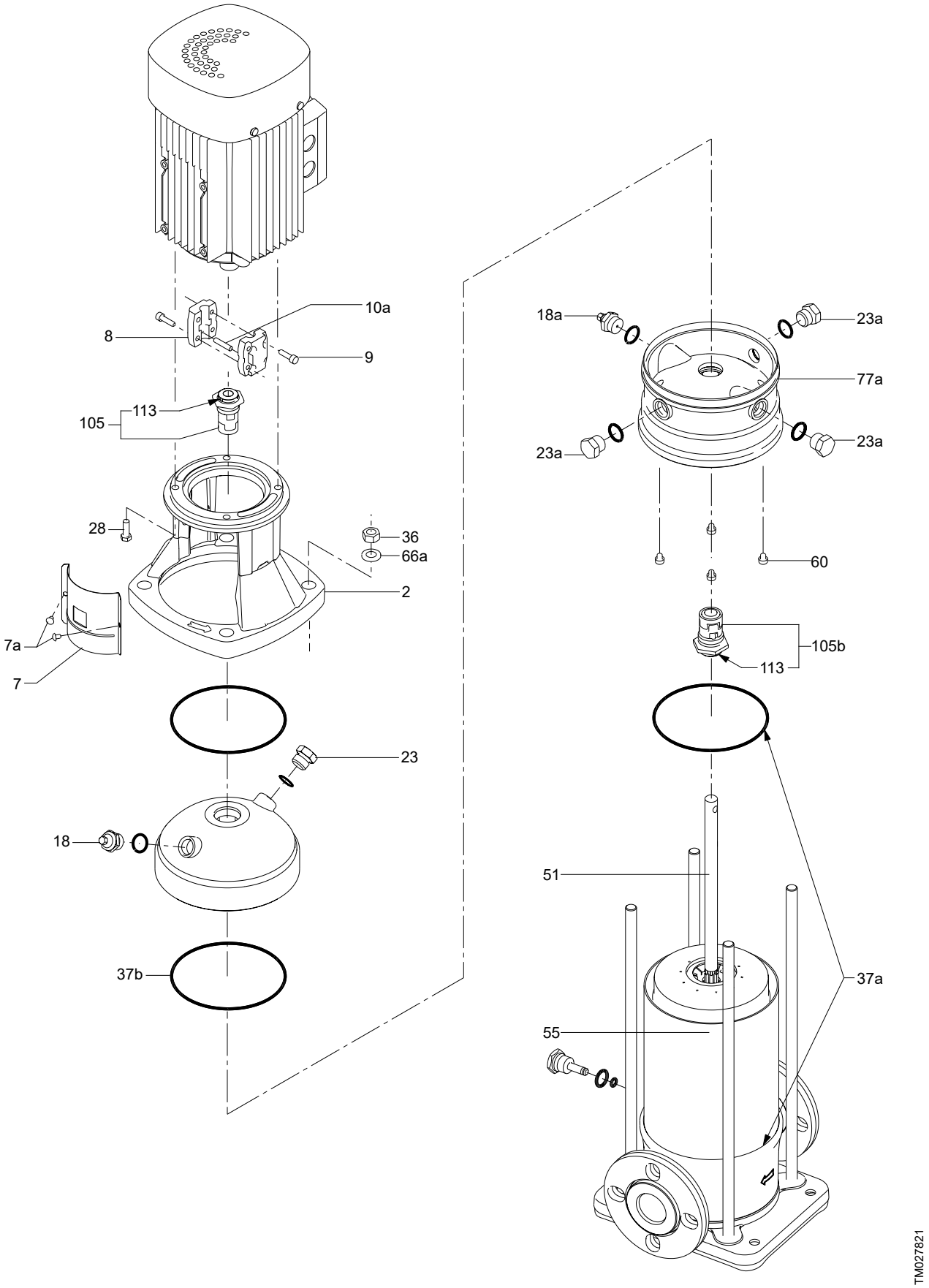

CR, CRI, CRN 32, 45, 64, 90

Connecting pipe

Pos.	Description	Rubber	EPDM/FKM	FXM
		Kit No	*96578685*	*96578686*
109a, 109b	O-ring	FXM	-	2
		EPDM	2	-
		FKM	2	-
149	Connecting pipe		1	1

Shaft seal, CR(N) 32

Pos	Kit No		*96578679*	*96578680*
	Description	Rubber	AUUE	AUUV
37b	O-ring	EPDM	2	-
		FKM	-	2
105b	Shaft seal		1	1
106	Nut		1	1
107	Washer		1	1
-	Grinding device		1	1

Shaft seal, CR(N) 45/64

Pos	Kit No		*96578681*	*96578682*
	Description	Rubber	AUUE	AUUV
37b	O-ring	EPDM	2	-
		FKM	-	2
105b	Shaft seal		1	1
106	Nut		1	1
107	Washer		1	1
-	Grinding device		1	1

Shaft seal, CR(N) 90

Pos	Kit No		*96578683*	*96578684*
	Description	Rubber	AUUE	AUUV
37b	O-ring	EPDM	2	-
		FKM	-	2
105b	Shaft seal		1	1
106	Nut		1	1
107	Washer		1	1
-	Grinding device		1	1

CR, CRI, CRN 32, 45, 64, 90, back to back

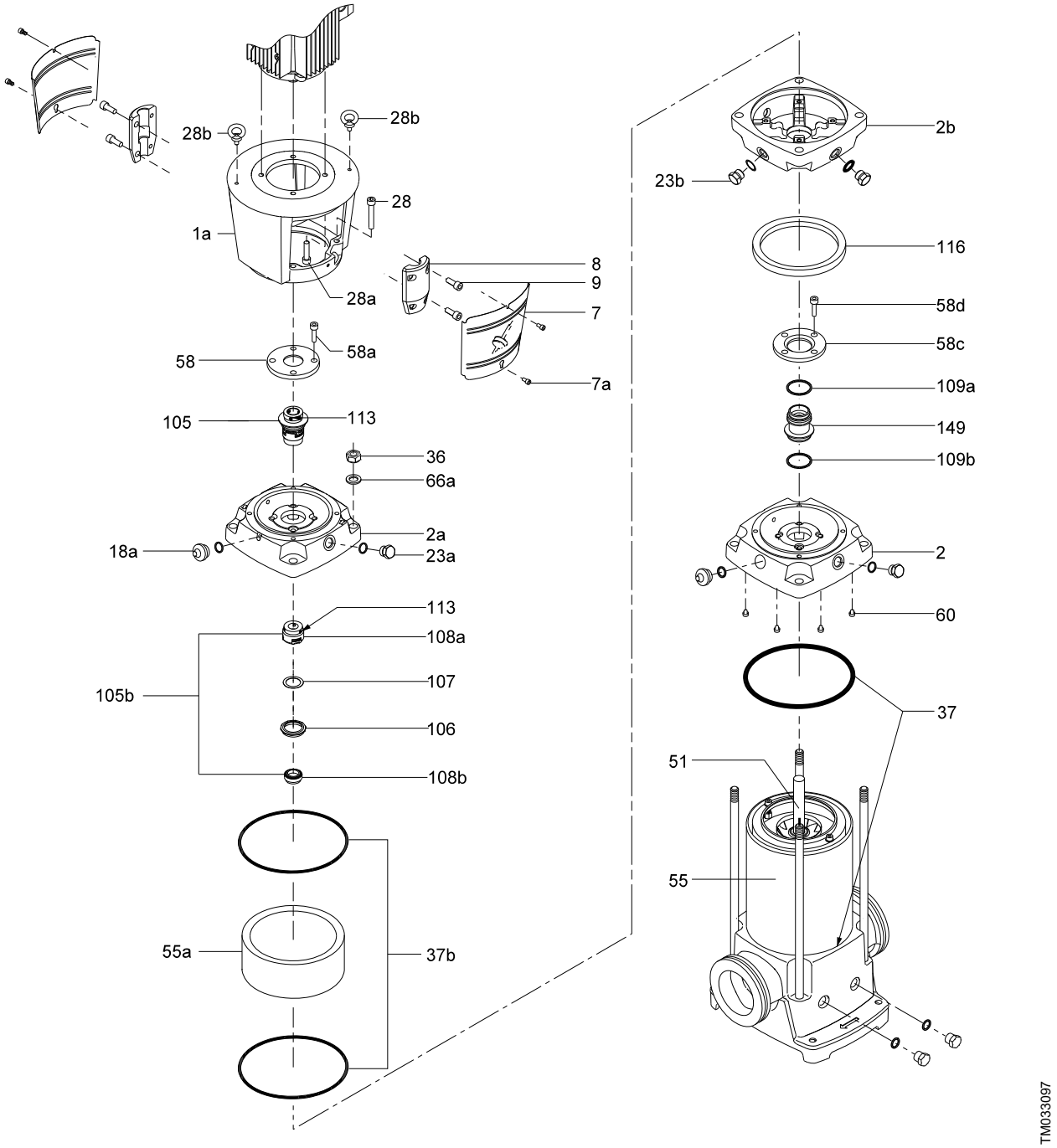

CR, CRI, CRN 32, 45, 64, 90, model B

O-ring, CR(N) 32

Pos	Kit No		98593542	98593544	98593547	98593549	98593562	98593563	98593564	98593565
	Description	**Rubber**	**EPDM**	**FKM**	**FXM**	**FFKM**	**FXM/EPDM**	**FXM/FKM**	**FFKM/EPDM**	**FFKM/FKM**
	O-ring	EPDM	2				2		2	
		FKM		2				2		2
		FXM			2					
		FFKM				2				
	O-ring	EPDM	1				1		1	
		FKM		1				1		1
		FXM			1	1				
	O-ring	EPDM	2				2		2	
		FKM		2				2		2
		FXM			2					
		FFKM				2				
	O-ring	EPDM	2							
		FKM		2						
		FXM			2		2	2		
		FFKM				2			2	2
	O-ring	EPDM	2							
		FKM		2				2		
		FXM			2	2	2		2	2
		FFKM								
	O-ring	EPDM	4							
		FKM		4						
		FXM			4		4	4		
		FFKM				4			4	4
	Spring	PTFE	4	4	4	4	4	4	4	4
	Adjusting fork		2	2	2	2	2	2	2	2

O-ring, CR(N) 45, 64

Pos	Kit No		98593566	98593568	98593592	98593593	98593594	98593598	98593603	98593608
	Description	Rubber	EPDM	FKM	FXM	FFKM	FXM/EPDM	FXM/FKM	FFKM/EPDM	FFKM/FKM
	O-ring	EPDM	2				2		2	
		FKM		2				2		2
		FXM			2					
		FFKM				2				
	O-ring	EPDM	1				1		1	
		FKM		1				1		1
		FXM			1	1				
	O-ring	EPDM	2				2		2	
		FKM		2				2		2
		FXM			2					
		FFKM				2				
	O-ring	EPDM	2							
		FKM		2			2			
		FXM			2			2		
		FFKM				2			2	2
	O-ring	EPDM	2							
		FKM		2						
		FXM			2	2	2	2	2	2
		FFKM								
	O-ring	EPDM	4							
		FKM		4						
		FXM			4		4	4		
		FFKM				4			4	4
	Spring	PTFE	4	4	4	4	4	4	4	4
	Adjusting fork		2	2	2	2	1	1	1	1

CR, CRI, CRN 32, 45, 64, 90, model B

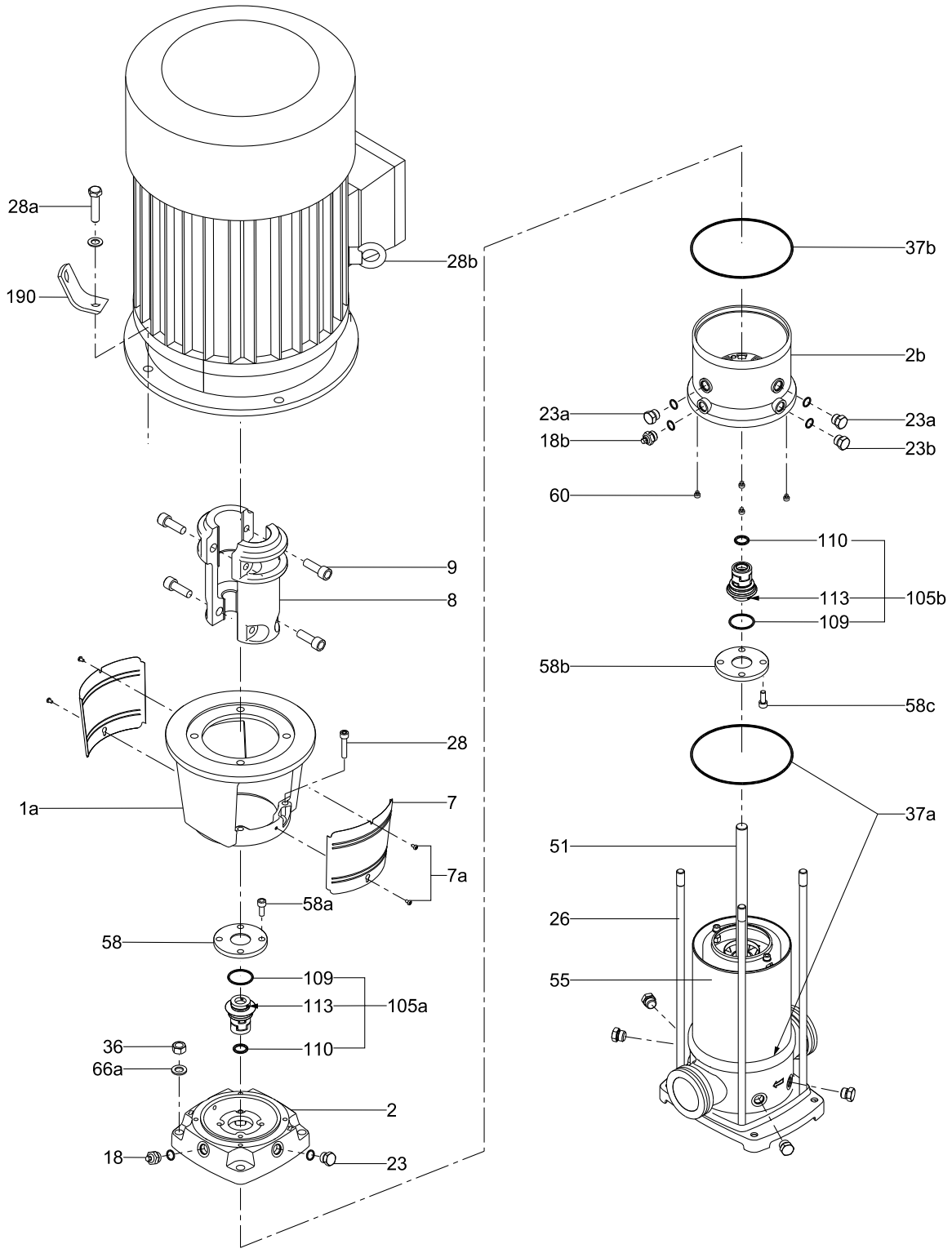

O-ring, CR(N) 90

Pos	Kit No		98593611	98593612	98593615	98593616	98593618	98593620	98593622	98593624
	Description	Rubber	EPDM	FKM	FXM	FFKM	FXM/EPDM	FXM/FKM	FFKM/EPDM	FFKM/FKM
	O-ring	EPDM	2				2		2	
		FKM		2				2		2
		FXM			2					
		FFKM				2				
	O-ring	EPDM	1				1		1	
		FKM		1				1		1
		FXM			1	1				
	O-ring	EPDM	2				2		2	
		FKM		2				2		2
		FXM			2					
		FFKM				2				
	O-ring	EPDM	2							
		FKM		2						
		FXM			2		2	2		
		FFKM				2			2	2
	O-ring	EPDM	2							
		FKM		2						
		FXM			2	2	2	2	2	2
		FFKM								
	O-ring	EPDM	4							
		FKM		4						
		FXM			4		4	4		
		FFKM				4			4	4
	Spring	PTFE	4	4	4	4	4	4	4	4
	Adjusting fork		2	2	2	2	1	1	1	1

Plug

Pos	Description/ Kit No	98593644
	Plug	2
	Air vent screw	1
	Plug	1
	O-ring	4
	O-ring	4
	O-ring	4

Cover

Pos	Description/ Kit No	98593648
	Cover N	1
	Cap Screw	4

CR, CRI, CRN 32, 45, 64, 90, model B

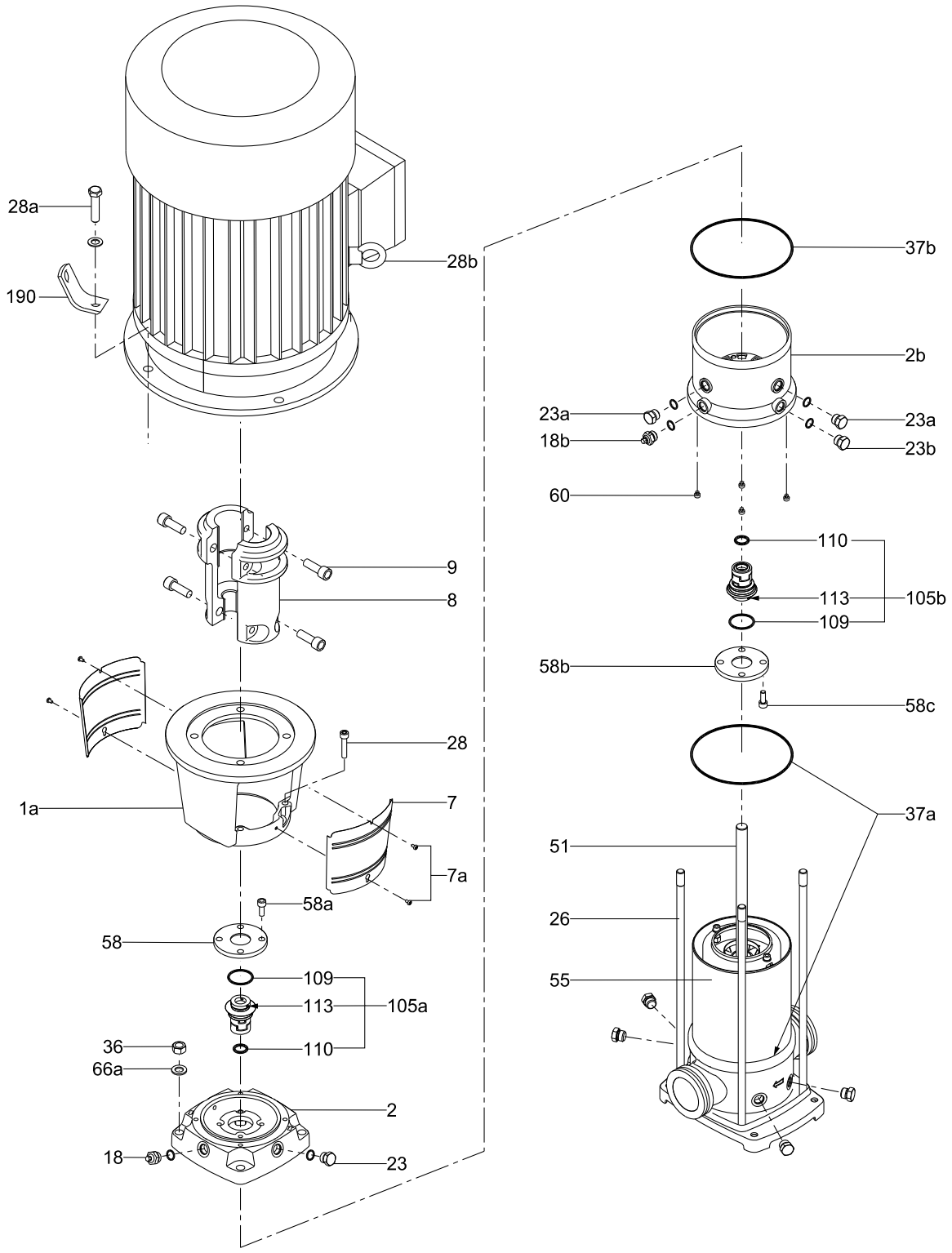

16. CR CRT

CRT 2

50/60 Hz, All models before 0336 (yyww)

Chamber stack complete

Pos.	Consists of items: 5a, 67, 64c, 49, 47a, 4a, 64a, 4, 64, 61, 51, 50a, 67a, 3, 69 Number of stages	Kit No
80	2	*405553*
	3	*405554*
	4	*405555*
	5	*405556*
	6	*405557*
	7	*405558*
	8	*405559*
	9	*405560*
	10	*405561*
	11	*405562*
	12	*405563*
	13	*405564*
	15	*405565*
	18	*405566*
	22	*405567*
	26	*405568*

Coupling complete

Pos.	Kit No	*415060*	*415061*	*415062*	*415063*	*415314*	*415315*
	Motor/pump shaft diameter [mm]	**14/12**	**19/12**	**24/12**	**28/12**	**15.8/12**	**28.5/12**
	Description					**NEMA**	**NEMA**
10a	Coupling half	2	2	2	2	2	2
9	Screw	4	4	4	4	4	4
10	Pin	1	1	1	1	1	1

Shaft seal

Pos.	Kit No	*405346*	*405349*
	Description	**AUUE**	**AUUV**
37	Sleeve gasket	2	2
105	Shaft seal	1	1

Wear parts

Pos.	Kit No	*96434799*	*96434800*	*96434801*
	Number of stages	**2-10**	**11-18**	**22-26**
	Description			
4a	Bearing chamber	1	2	3
37	Sleeve gasket	2	2	2
45	Neck ring	9	16	23
47a	Bearing ring	1	2	3
61	Spacer for shaft seal	1	1	1
64a	Spacer ring	2	-	-
65	Neck ring retainer	9	16	23
64c	Spacer	1	1	1
67	Lock nut	1	1	1
67a	Split pin	1	1	1
100	O-ring	1	1	1

CRT 2, All models before 0336 (yyww)

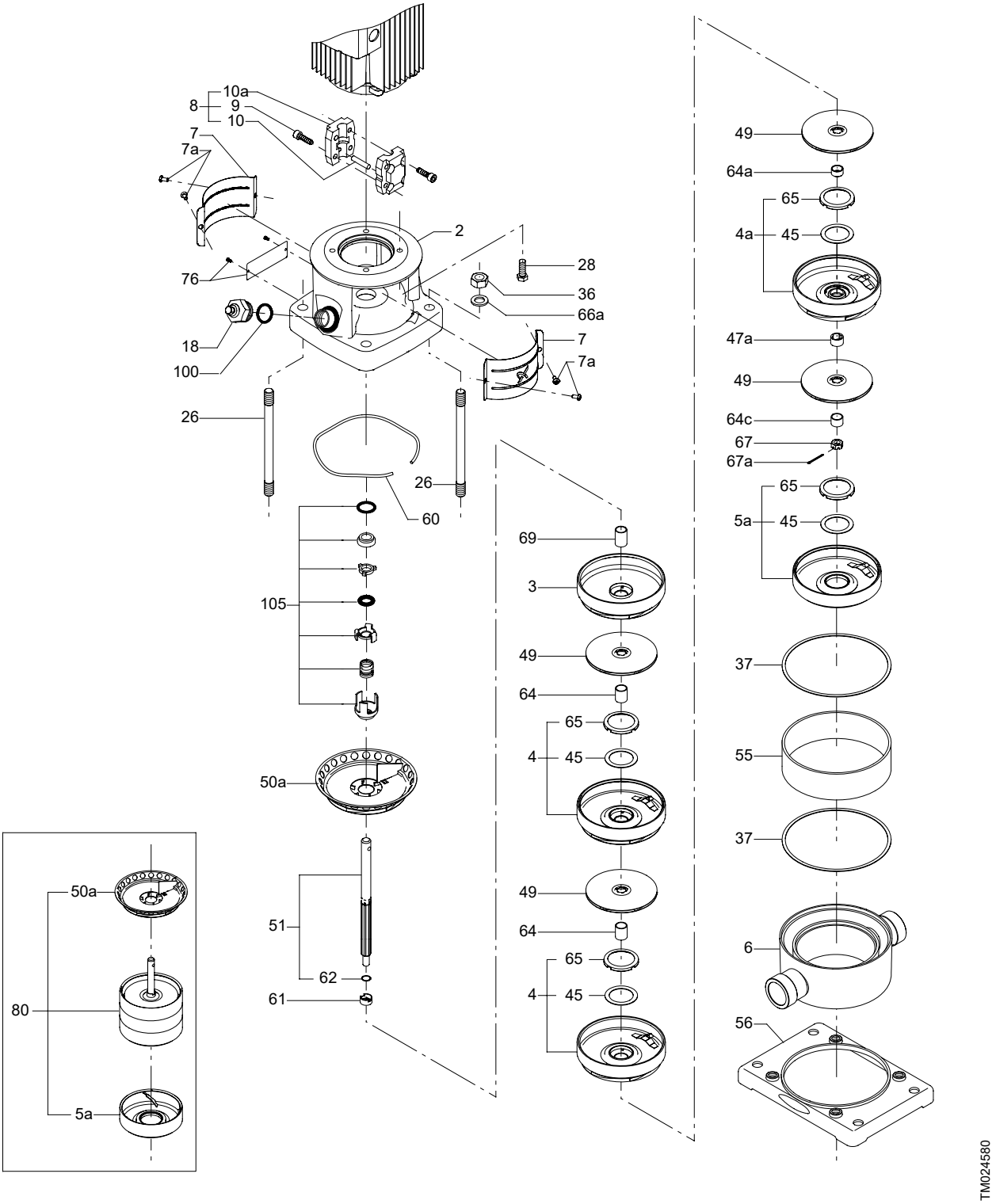

50/60 Hz, All models after 0335 (yyww)

Chamber stack complete

Pos.	Consists of items: 4, 4a, 47a, 49, 50a, 51, 61, 64, 64a, 64c, 67, 67a Number of stages	Kit No
80	2	*96611188*
	3	*96611189*
	4	*96611190*
	5	*96611191*
	6	*96611192*
	7	*96611193*
	9	*96611194*
	11	*96611195*
	13	*96611196*
	15	*96611197*
	18	*96611198*
	22	*96611199*
	26	*96611200*

Coupling complete

Pos.	Kit No	*415060*	*415061*	*415062*	*415063*	*415314*	*415315*
	Motor/pump shaft diameter [mm]	**14/12**	**19/12**	**24/12**	**28/12**	**15.8/12**	**28.5/12**
	Description					**NEMA**	**NEMA**
10a	Coupling half	2	2	2	2	2	2
9	Screw	4	4	4	4	4	4
10	Pin	1	1	1	1	1	1

Shaft seal

Pos.	Kit No	*96513598*	*96513599*	*97788160*	*98073060*
	Description	**AUUE**	**AUUV**	**AQQV**	**AQQK**
37	O-ring	2	2	2	-
105	Shaft seal	1	1	1	1

Wear parts

Pos.	Number of stages	2-9	11-18	22-26
	Description/Kit No	*96513600*	*96513601*	*96513602*
4a	Bearing chamber	1	2	3
37	O-ring	2	2	2
45	Neck ring	9	16	23
47a	Bearing ring	1	2	3
61	Spacer for shaft seal	1	1	1
65	Neck ring retainer	9	16	23
64c	Spacer	1	1	1
67	Lock nut	1	1	1
67a	Split pin	1	1	1
100	O-ring	2	2	2

CRT 2, All models after 0335 (yyww)

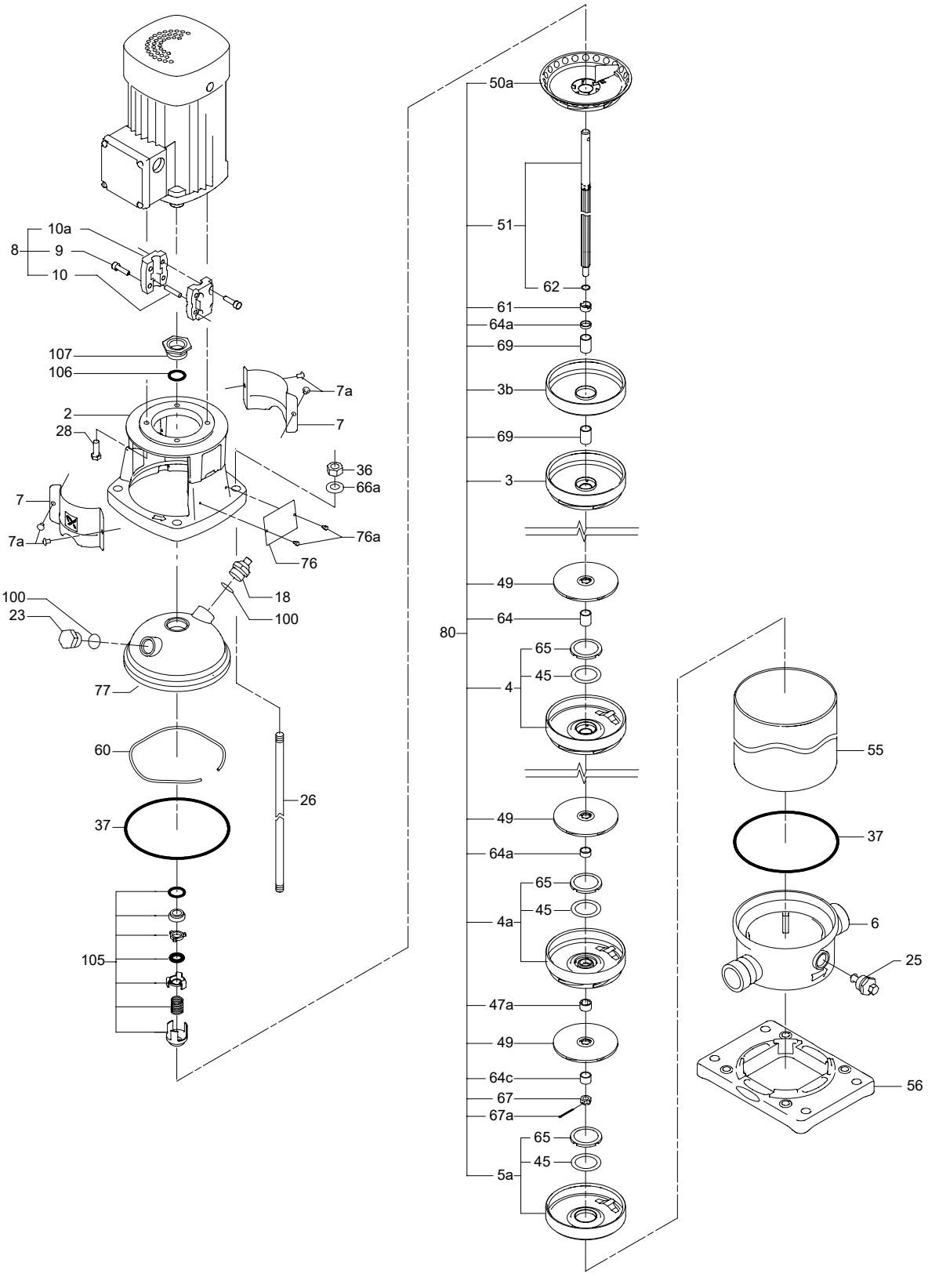

TM027207

CRT 4

50/60 Hz, All models before 0336 (yyww)

Chamber stack complete

Pos.	Consists of items: 3, 4, 4a, 5a, 47a, 49, 50a, 51, 61, 64, 64a, 64c, 66b, 67, 67a, 69 Number of stages	Kit No
80	1	*415523*
	2	*415524*
	3	*415525*
	4	*415526*
	5	*415527*
	6	*415528*
	7	*415529*
	8	*415530*
	10	*415531*
	12	*415532*
	14	*415533*
	16	*415534*
	19	*415535*
	22	*415536*

Coupling complete

Pos.	Kit No	*415060*	*415061*	*415062*	*415063*	*415065*	*415314*	*415315*
	Motor/pump shaft diameter [mm]	**14/12**	**19/12**	**24/12**	**28/12**	**38/12**	**15.8/12**	**28.5/12**
	Description						**NEMA**	**NEMA**
9	Screw	4	4	4	4	4	4	4
10	Pin	1	1	1	1	1	1	1
10a	Coupling half	2	2	2	2	2	2	2

Shaft seal

Pos.	Kit No	*405346*	*405349*
	Description	**AUUE**	**AUUV**
37	Sleeve gasket	2	2
105	Shaft seal	1	1

Wear parts

Pos.	Kit No	*96434802*	*96434803*	*96434804*	*96434805*
	Number of stages	**1-6**	**7-12**	**14-16**	**19-22**
	Description				
4a	Bearing chamber	1	2	3	4
37	Sleeve gasket	2	2	2	2
45	Neck ring	5	10	13	18
47a	Bearing ring	1	2	3	4
61	Spacer for shaft seal	1	1	1	1
64c	Spacer	1	1	1	1
65	Neck ring retainer	5	10	13	18
67	Lock nut	1	1	1	1
67a	Split pin	1	1	1	1
100	O-ring	1	1	1	1

CRT 4, All models before 0336 (yyww)

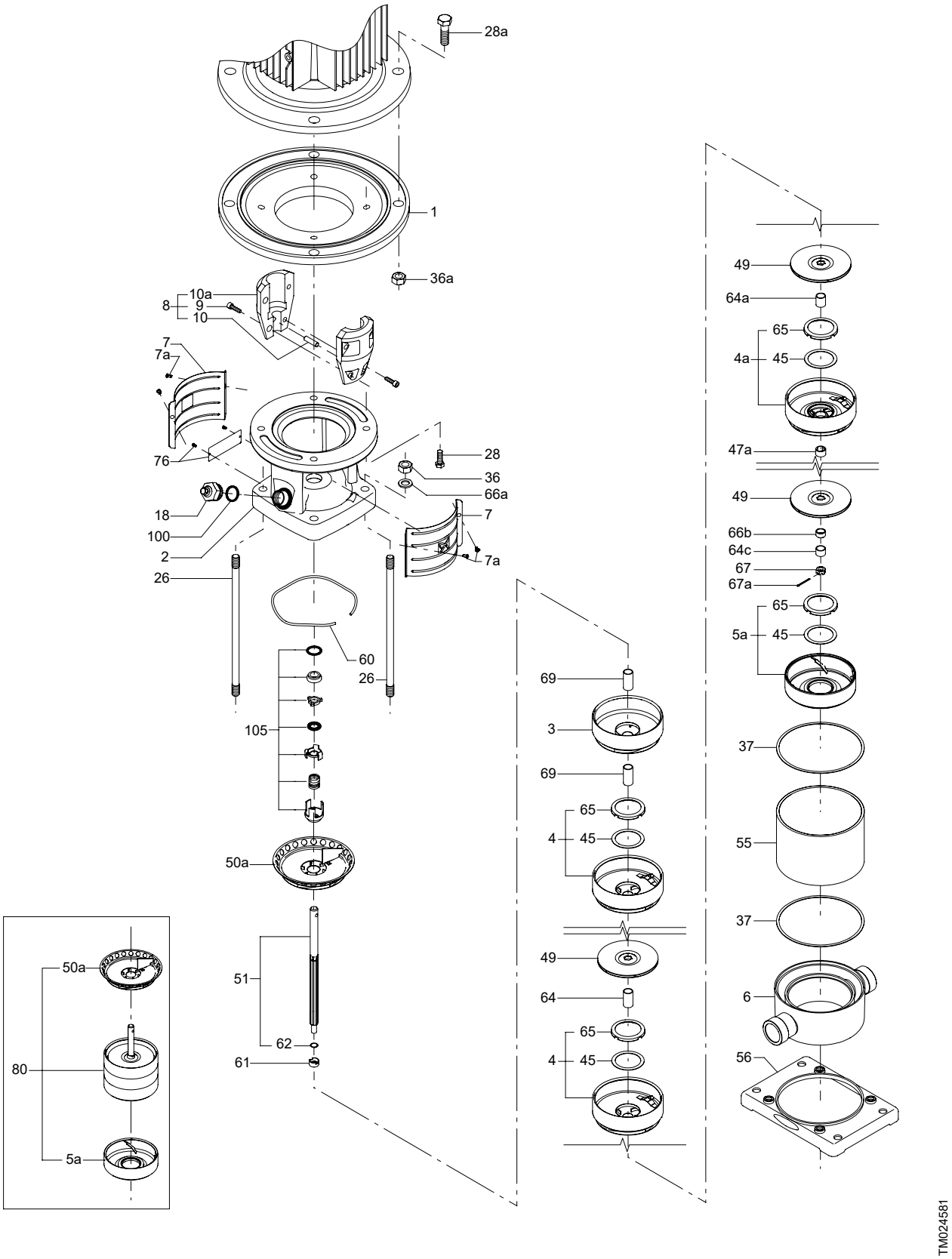

All models after 0335 (yyww)

Chamber stack complete

Pos.	Consists of items: 3, 4, 4a, 26a, 26c, 44a, 44b, 47a, 49, 51, 61, 64, 64a, 64c, 64d, 67, 67a, 69 Number of stages	Kit No
80	1	*96611201*
	2	*96611202*
	3	*96611203*
	4	*96611204*
	5	*96611205*
	6	*96611206*
	7	*96611208*
	8	*96611209*
	10	*96611210*
	12	*96611212*
	14	*96611213*
	16	*96611215*
	19	*96611216*
	22	*96611217*

Coupling complete

Pos.	Kit No	*415060*	*415061*	*415062*	*415063*	*415065*	*415314*	*415315*
	Motor/pump shaft diameter [mm]	**14/12**	**19/12**	**24/12**	**28/12**	**38/12**	**15.8/12**	**28.5/12**
	Description						**NEMA**	**NEMA**
9	Screw	4	4	4	4	4	4	4
10	Pin	1	1	1	1	1	1	1
10a	Coupling half	2	2	2	2	2	2	2

Shaft seal

Pos.	Kit No	*96513598*	*96513599*	*97788160*	*98073060*
	Description	**AUUE**	**AUUV**	**AQQV**	**AQQK**
37	O-ring	2	2	2	2
105	Shaft seal	1	1	1	1

Wear parts

Pos.	Kit No	*96513603*	*96513604*	*96513605*	*96513606*
	Number of stages	**1-6**	**7-12**	**14-16**	**19-22**
	Description				
4a	Bearing chamber	1	2	3	4
37	O-ring	2	2	2	2
45	Neck ring	4	10	13	18
47a	Bearing ring	1	2	3	4
61	Spacer for shaft seal	1	1	1	1
64c	Spacer	1	1	1	1
65	Neck ring retainer	4	10	13	18
67	Lock nut	1	1	1	1
67a	Split pin	1	1	1	1
100	O-ring	2	2	2	2

CRT 4, All models after 0335 (yyww)

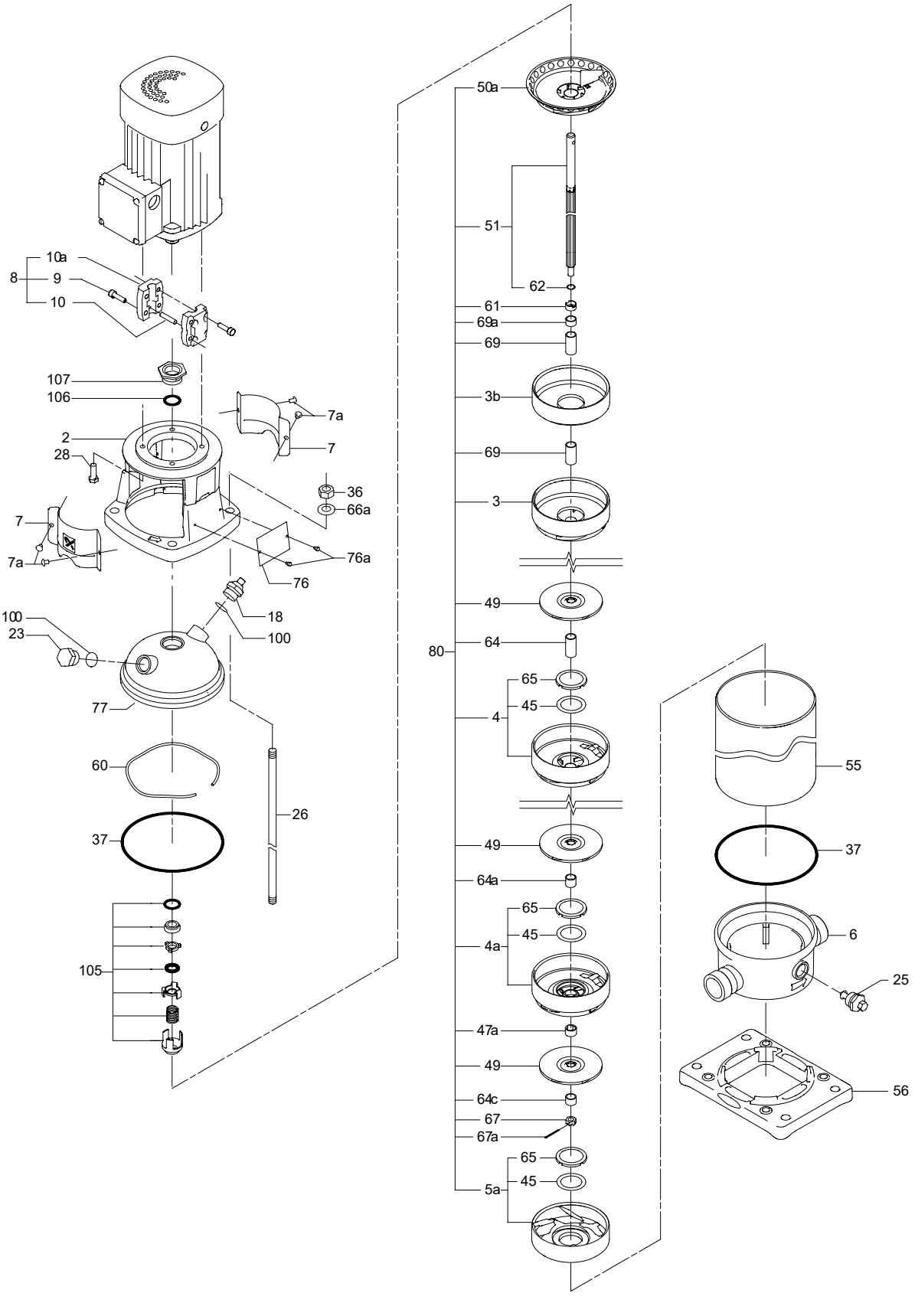

CRT 8

50/60 Hz, All models before 0405 (yyww)

Chamber stack complete

Pos.	Consists of items: 3, 3a, 4, 4a, 44, 47a, 49, 51, 61, 64, 64a, 64c, 64d, 67, 67a, 69 Number of stages	Kit No
80	1	*425936*
	2	*425937*
	3	*425938*
	4	*425939*
	5	*425940*
	6	*425941*
	8	*425942*
	10	*425943*
	12	*425944*
	14	*425945*
	16	*425946*
	18	*425947*
	20	*425948*

Coupling complete

Pos.	Kit No	*339114*	*339119*	*339124*	*339128*	*339138*	*339142*	*425260*	*425261*	*425262*	*425263*
	Motor/pump shaft diameter [mm]	**14/16**	**19/16**	**24/16**	**28/16**	**38/16**	**42/16**	**15.9/16**	**28.6/16**	**34.9/16**	**41.3/16**
	Description							**NEMA**	**NEMA**	**NEMA**	**NEMA**
9	Screw	4	4	4	4	4	4	4	4	4	4
10	Pin	1	1	1	1	1	1	1	1	1	1
10a	Coupling half	2	2	2	2	2	2	2	2	2	2

Shaft seal

Pos.	Kit No	*425303*	*425304*
	Description	**AUUE**	**AUUV**
37	Sleeve gasket	2	2
78	O-ring	1	1
98	O-ring	1	1
105	Shaft seal	1	1

Wear parts

Pos.	Kit No	*96434806*	*96434807*	*96434808*
	Number of stages	**1-8**	**10-14**	**16-20**
	Description			
4a	Bearing chamber	1	2	3
37	Sleeve gasket	2	2	2
45	Neck ring	7	12	17
47a	Bearing ring	1	2	3
61	Spacer for shaft seal	1	1	1
64c	Spacer	1	1	1
65	Neck ring retainer	7	12	17
67	Lock nut	1	1	1
67a	Split pin	1	1	1
78	O-ring	1	1	1
98	O-ring	1	1	1
100	O-ring	1	1	1

CRT 8, All models before 0405 (yyww)

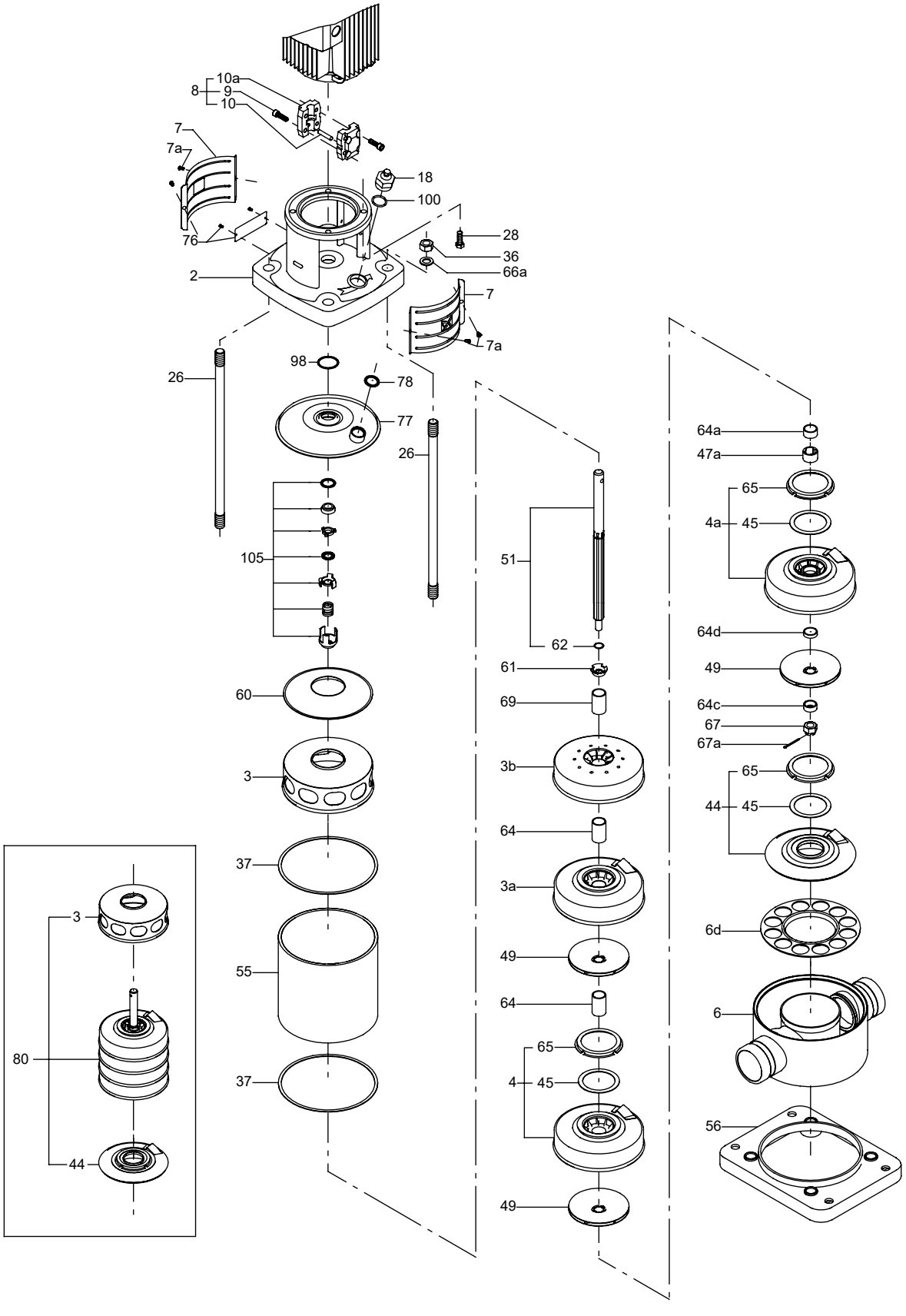

50/60 Hz, All models after 0404 (yyww)

Chamber stack complete

Pos.	Consists of items: 3, 4, 4a, 26a, 26b, 26c, 44a, 44b, 47a, 49, 51, 61, 64, 64a, 64c, 64d, 67, 67a, 69 Number of stages	Kit No
80	1	*96611218*
	2	*96611219*
	3	*96611220*
	4	*96611221*
	5	*96611222*
	6	*96611223*
	8	*96611224*
	10	*96611225*
	12	*96611226*
	14	*96611227*
	17	*96611228*
	18	*96611229*
	20	*96611230*

O-ring

Pos.	Kit No	*96545210*
	Description	FFKM
37	O-ring ∅170.7 x 3.3	2
38	O-ring ∅16.3 x 2.4	1
38a	O-ring ∅5.3 x 2.4	1
60	Spring, PTFE	4
100	O-ring ∅16.3 x 2.4	2
106	O-ring ∅27.5 x 2.75	1

Coupling complete

Pos.	Motor type	MG 71	MG 80	MG 90	MG 100/112	MG 132 (short)	MG 132	MG 160 (short)	MG 160
	Motor/pump shaft diameter [mm]	14/16	19/16	24/16	28/16	38/16	38/16	42/16	42/16
	Description/Kit No	*339114*	*339119*	*339124*	*339128*	*96492112*	*96491088*	*96492113*	*96491089*
9	Screw	4	4	4	4	4	4	4	4
10	Pin	1	1	1	1	1	1	1	1
10a	Coupling half	2	2	2	2	2	2	2	2

Pos.	Motor type	56C	182TC (short)	182TC	213TC (short)	213TC	254TC (short)	254TC
	Motor/pump shaft diameter [mm]	15.9/16	28.6/16	28.6/16	34.9/16	34.9/16	41.2/16	41.2/16
	Description/Kit No	*96492114*	*96492115*	*96491130*	*96492116*	*96491131*	*96492117*	*96491132*
9	Screw	4	4	4	4	4	4	4
10	Pin	1	1	1	1	1	1	1
10a	Coupling half	2	2	2	2	2	2	2

Shaft seal

Pos.	Kit No	*96521638*	*96521639*	*97788185*	*98073074*	*98161845*
	Description	AUUE	AUUV	DQQV	DQQK	DQQE
37	O-ring	2	2	2	2	2
38a	O-ring	1	1	1	1	1
60	Spring	4	4	4	4	4
100	O-ring	3	3	3	3	3
105	Shaft seal	1	1	1	1	1
106	O-ring	1	1	1	1	1

Wear parts

Pos.	Kit No	96521680	96521683	96521681	96521684	96521682	96521685
	Number of stages	**1-6**	**1-6**	**10-14**	**10-14**	**17-20**	**17-20**
	Description	**EPDM**	**FKM**	**EPDM**	**FKM**	**EPDM**	**FKM**
4a	Bearing chamber	1	1	2	2	3	3
37	O-ring 170.7 x 3.3	2	2	2	2	2	2
45	Neck ring	5	5	12	12	17	17
47a	Bearing ring	1	1	2	2	3	3
60	Spring	4	4	4	4	4	4
61	Spacer for shaft seal	1	1	1	1	1	1
64	Spacing pipe	1	1	1	1	1	1
65	Neck ring retainer	5	5	12	12	17	17
67	Lock nut	1	1	1	1	1	1
67a	Split pin	1	1	1	1	1	1
100	O-ring 16.3 x 2.4	3	3	3	3	3	3
106	O-ring 27.5 x 2.75	1	1	1	1	1	1

CRT 8, All models after 0404 (yyww)

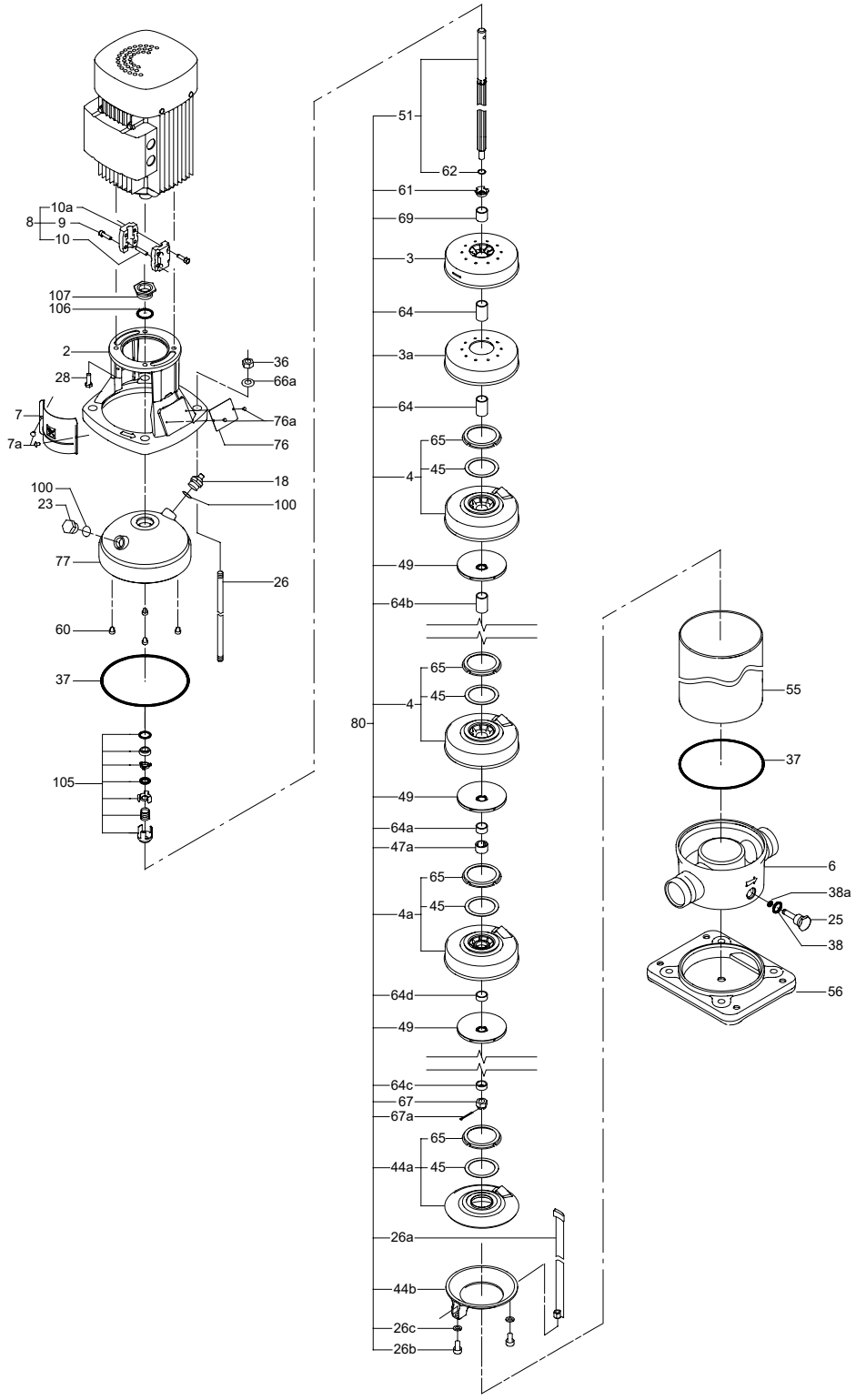

TM027783

CRT 16

50/60 Hz, All models before 0405 (yyww)

Chamber stack complete

Pos.	Consists of items: 3, 3a, 4, 4a, 44, 47a, 49, 51, 61, 64, 64a, 64c, 64d, 67, 67a, 69, 69a Number of stages	Kit No
80	2	336925
	3	336926
	4	336927
	5	336928
	6	336929
	7	336930
	8	336931
	10	336932
	12	336933
	14	336934
	16	336935

Coupling complete

Pos.	Kit No	339124	339128	339138	339142	425261	425262	425263
	Motor/pump shaft diameter [mm]	24/16	28/16	38/16	42/16	28.6/16	34.9/16	41.3/16
	Description					NEMA	NEMA	NEMA
9	Screw	4	4	4	4	4	4	4
10	Pin	1	1	1	1	1	1	1
10a	Coupling half	2	2	2	2	2	2	2

Shaft seal

Pos.	Kit No	425303	425304
	Description	AUUE	AUUV
37	Sleeve gasket	2	2
78	O-ring	1	1
98	O-ring	1	1
105	Shaft seal	1	1

Wear parts

Pos.	Kit No	96434809	96434810	96434811
	Number of stages	2-6	7-10	12-16
	Description			
4a	Bearing chamber	1	2	3
37	Sleeve gasket	2	2	2
45	Neck ring	5	8	13
47a	Bearing ring	1	2	3
49c	Wear ring	6	10	16
61	Spacer for shaft seal	1	1	1
64c	Spacer	1	1	1
65	Neck ring retainer	5	8	13
67	Lock nut	1	1	1
67a	Split pin	1	1	1
78	O-ring	1	1	1
98	O-ring	1	1	1
100	O-ring	1	1	1

CRT 16, All models before 0405 (yyww)

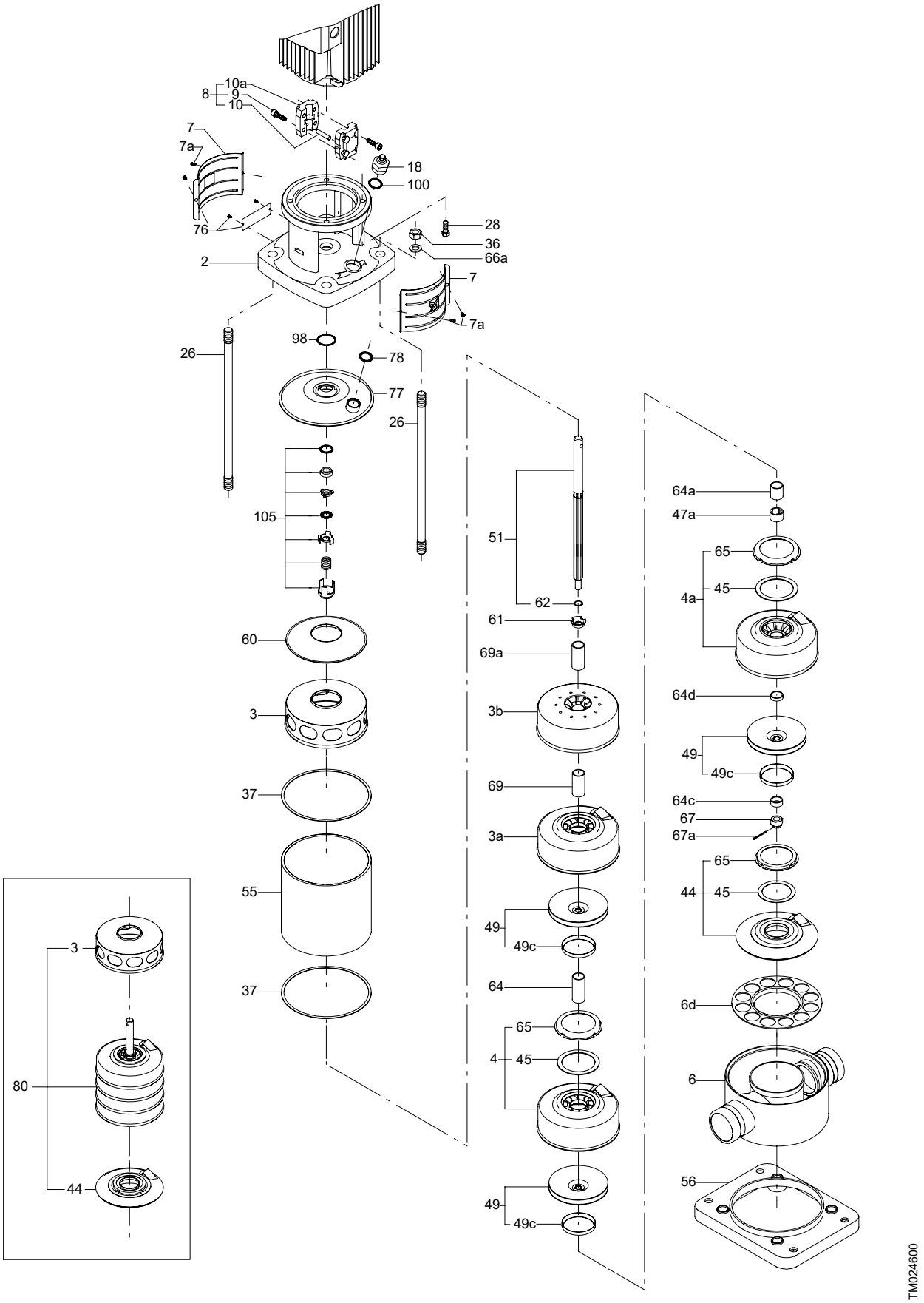

50/60 Hz, All models after 0404 (yyww)

Chamber stack complete

Pos.	Consists of items: 3, 4, 4a, 26a, 26b, 26c, 44a, 44b, 47a, 49, 51, 61, 64, 64a, 64c, 64d, 67, 67a, 69 Number of stages	Kit No
80	2	*96611231*
	3	*96611232*
	4	*96611233*
	5	*96611234*
	6	*96611235*
	7	*96611236*
	8	*96611237*
	10	*96611238*
	12	*96611239*
	14	*96611240*
	17	*96611241*

O-ring

Pos.	Kit No	*96545210*
	Description	FFKM
37	O-ring ∅170.7 x 3.3	2
38	O-ring ∅16.3 x 2.4	1
38a	O-ring ∅5.3 x 2.4	1
60	Spring, PTFE	4
100	O-ring ∅16.3 x 2.4	2
106	O-ring ∅27.5 x 2.75	1

Coupling complete

Pos.	Motor type	MG 71	MG 80	MG 90	MG 100/112	MG 132 (short)	MG 132	MG 160 (short)	MG 160
	Motor/pump shaft diameter [mm]	14/16	19/16	24/16	28/16	38/16	38/16	42/16	42/16
	Description/ Kit No	*339114*	*339119*	*339124*	*339128*	*96492112*	*96491088*	*96492113*	*96491089*
10a	Coupling half	2	2	2	2	2	2	2	2
9	Screw	4	4	4	4	4	4	4	4
10	Pin	1	1	1	1	1	1	1	1

Pos.	Motor type	56C	182TC (short)	182TC	213TC (short)	213TC	254TC (short)	254TC
	Motor/pump shaft diameter [mm]	15.9/16	28.6/16	28.6/16	34.9/16	34.9/16	41.2/16	41.2/16
	Description/Kit No	*96492114*	*96492115*	*96491130*	*96492116*	*96491131*	*96492117*	*96491132*
10a	Coupling half	2	2	2	2	2	2	2
9	Screw	4	4	4	4	4	4	4
10	Pin	1	1	1	1	1	1	1

Shaft seal

Pos.	Kit No	96521638	96521639	97788185	98073074	98161845
	Description	AUUE	AUUV	DQQV	DQQK	DQQE
37	O-ring	2	2	2	2	2
38a	O-ring	1	1	1	1	1
60	Spring	4	4	4	4	4
100	O-ring	3	3	3	3	3
105	Shaft seal	1	1	1	1	1
106	O-ring	1	1	1	1	1

Wear parts

Pos.	Kit No	96521686	96521689	96521687	96521690	96521688	96521691
	Number of stages	2-5	2-5	6-10	6-10	12-17	12-17
	Description	EPDM	FKM	EPDM	FKM	EPDM	FKM
4a	Bearing chamber	1	1	2	2	3	3
37	O-ring 170.7 x 3.3	2	2	2	2	2	2
45	Neck ring	4	4	8	8	14	14
47a	Bearing ring	1	1	2	2	3	3
60	Spring	4	4	4	4	4	4
61	Spacer for shaft seal	1	1	1	1	1	1
64c	Spacing pipe	1	1	1	1	1	1
65	Neck ring retainer	4	4	8	8	14	14
67	Lock nut	1	1	1	1	1	1
67a	Split pin	1	1	1	1	1	1
100	O-ring 16.3 x 2.4	3	3	3	3	3	3
106	O-ring 27.5 x 2.75	1	1	1	1	1	1

CRT 16, All models after 0404 (yyww)

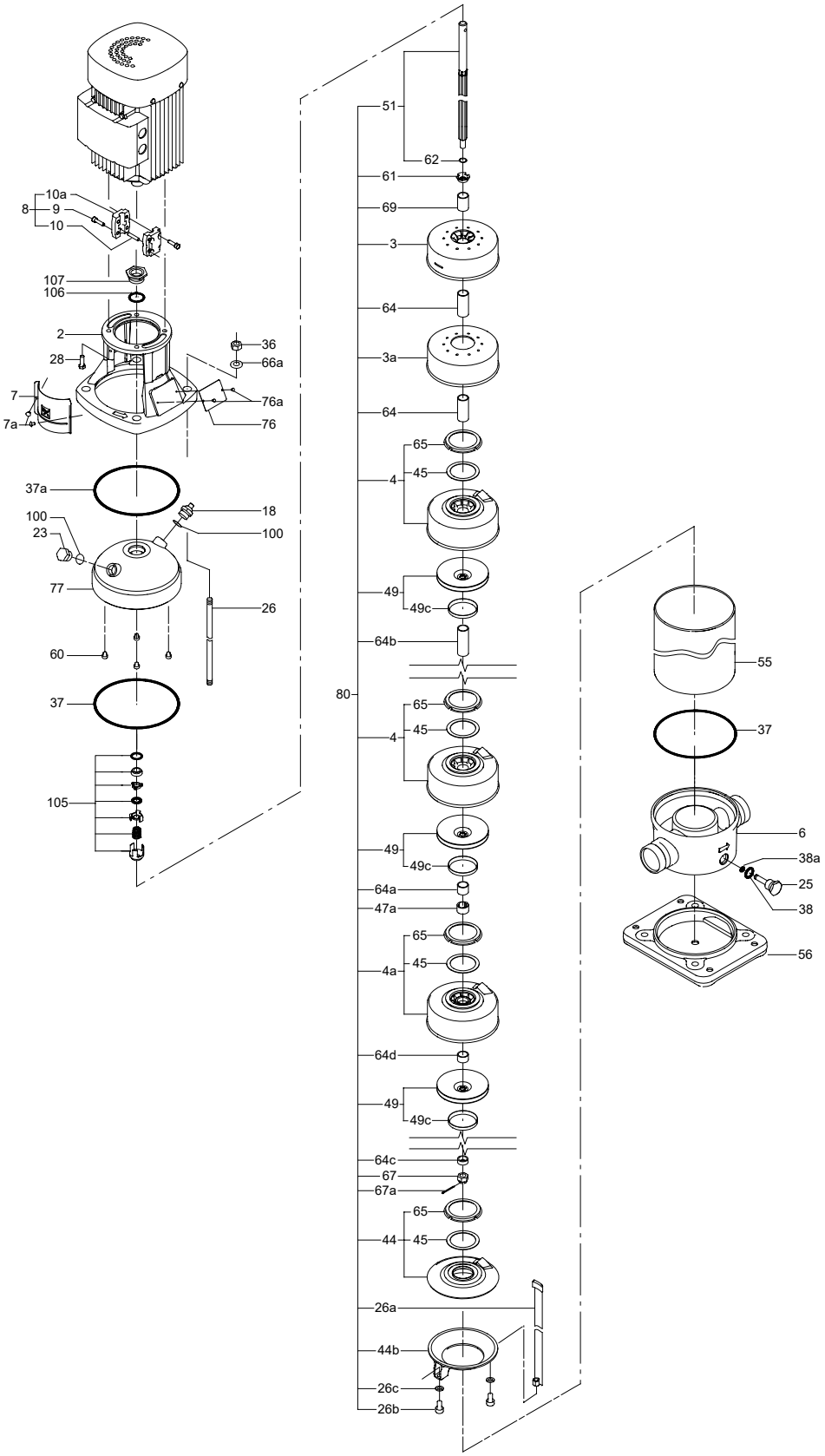

TM027785

17. CR HS

CRNE 1, 3-23 HS

50/60 Hz

Chamber stack complete (silicon carbide bearing)

Pump type	CRNE 1-23	CRNE 1-23	CRNE 3-23	CRNE 3-23
Pos.	**EPDM**	**FKM**	**EPDM**	**FKM**
80	*96478701*	*96478702*	*96478703*	*96478704*

Coupling complete

Pos.	Kit No	*415063*
	Motor/pump shaft diameter [mm]	**28/12**
	Description	
9	Screw	4
10	Pin	1
10a	Coupling half	2

Coupling guard

Pos.	Kit No	*96505130*	*96505131*	*96505132*
	Description	**MG 71-80**	**MG 90-132**	**NEMA F 182/213 TC**
7	Coupling guard	2	2	2
7a	Screw	4	4	4

O-ring

Pos.	Kit No	*96483490*	*96483491*
	Description	**EPDM**	**FKM**
37	O-ring ∅137.5 x 3.3	2	2
38	O-ring ∅16.3 x 2.4	1	1
100	O-ring ∅16.3 x 2.4	2	2
109	O-ring ∅22 x 2.75	1	1

Plug

Pos.	Kit No		*96505133*	*96511103*
	Description		**EPDM/FKM**	**EPDM/FKM NEMA**
18	Air vent screw		1	1
23a	Pipe plug		1	1
23b	Pipe plug		1	1
25	Drain plug with bypass valve		1	1
38	O-ring ∅16.3 x 2.4	EPDM		
		FKM	1	1
100	O-ring ∅16.3 x 2.4	EPDM	1	1
		FKM	2	2

Sensor

Description	0-40 bar	0-60 bar
Kit No	*96483573*	*96483574*
Sensor	1	1

Shaft seal

Pos.	Kit No	*96455086*	*96455087*	*96533326*	*96533327*	*96455088*	*96455089*	*96491375*	*96455082*	*96455083*
	Description	**HQQE**	**HQQV**	**HQQK**	**HQQF**	**HQBE**	**HQBV**	**HQBK**	**HUBE**	**HUBV**
105	Shaft seal	1	1	1	1	1	1	1	1	1

Pos.	Kit No	*96533322*	*96533323*	*96455084*	*96455085*	*91043611*	*96533324*	*96533325*
	Description	**HUBK**	**HUBF**	**HUUE**	**HUUV**	**HUUV***	**HUUK**	**HUUF**
105	Shaft seal	1	1	1	1	1	1	1

* Silicone-free cartridge

CRNE 1, 3-23 HS

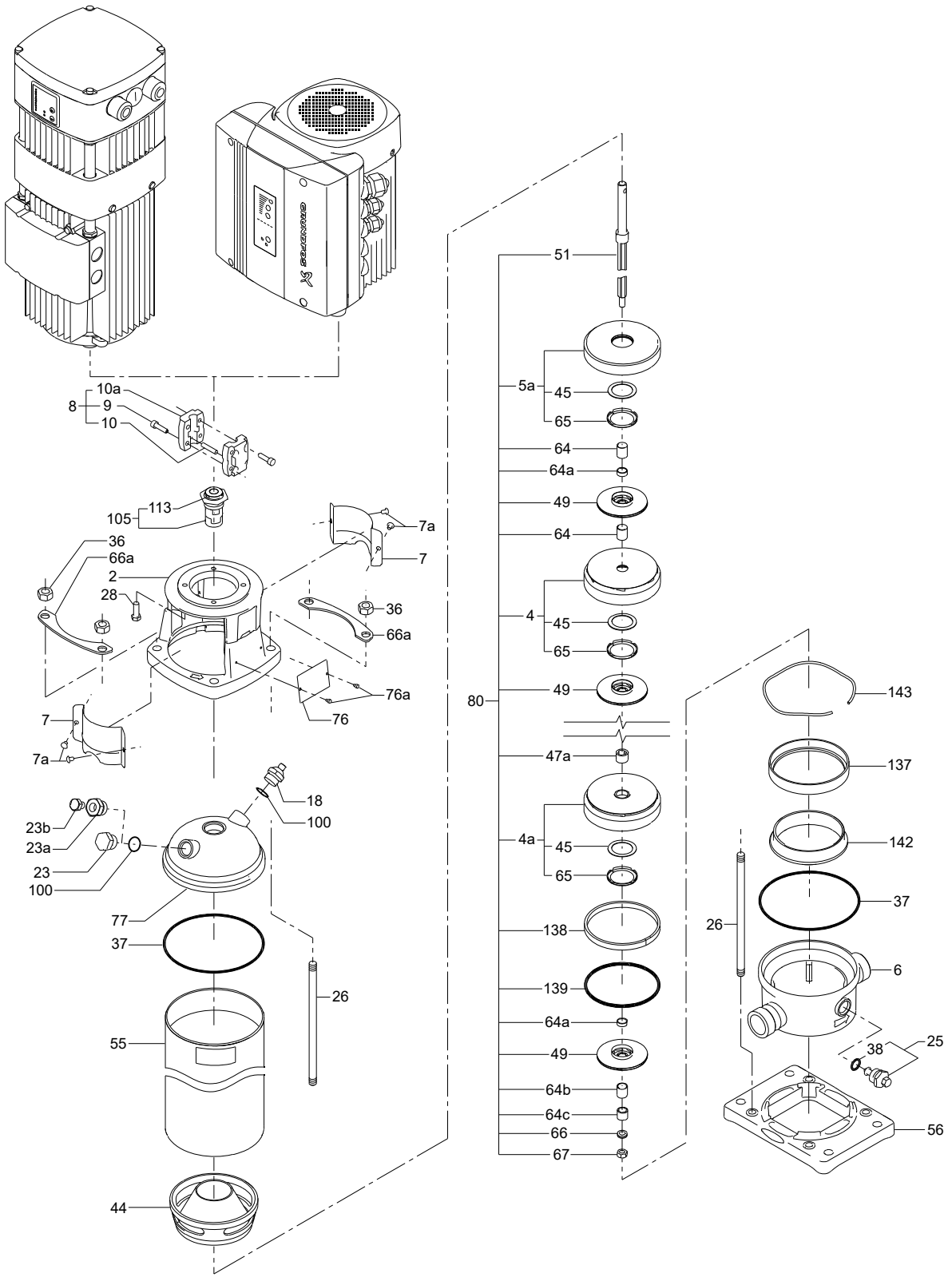
10a
8
9
10
105
113
36
66a
2
28
7a
7
36
66a
76a
76
7
7a
18
100
23b
23a
23
100
77
37
26
55
44
51
5a
45
65
64
64a
49
64
4
45
65
49
80
47a
4a
45
65
138
139
64a
49
64b
64c
66
67
143
137
142
37
26
6
38
25
56
TM024484

18. CR MAGdrive

CR, CRI, CRN 1-90

50/60 Hz

Bearing housing (from 0744)

Pos.	Description - Kit No	*96748864*
658	Bearing housing complete	1

Fitting kit for inner drive (from 0744)

Pos.	Description	CRN 1 - 20	CRN 32 - 90
	Kit No	*96766787*	*96766785*
651	Spacer	1	1
656	Washer set	1	1
657	Lock nut	1	1

Inner drive (from 0744)

The inner drive kit consists of one inner drive, complete (pos. 652) and one can (pos. 661).

Motor size [kW]	CRN 1, 3, 5	CRN 10, 15, 20	CRN 32, 45, 64, 90
0.37 - 1.5	*96749023*	*96749028*	
2.2 - 3.0	*96749025*	*96749030*	
4.0	*96749026*	*96749042*	
5.5	*96749027*	*96749043*	
7.5		*96749044*	
11 - 22		*96749045*	

O-ring for pump (before week 0744)

Pos.	Rubber type	EPDM	FKM	FFKM	FXM
	Description/ Kit No	*96533485*	*96533483*	*96533484*	*96463944*
37	O-ring 137.5 x 3.3	2	2	2	2
38	O-ring 16.3 x 2.4				1
100		1	1	1	2
109	O-ring 78 x 3	1	1	1	-
-	O-ring 22 x 2.75				1

O-ring (from 0744)

Pos.	Description	EPDM + FKM	FXM	FFKM
		96748763	*96748769*	*96748770*
109	O-ring 77.8 x 1.5	2 + 2	2	2
653a	O-ring	1 + 1	1	1

Outer drive (from 0744)

The outer drive kit consists of one outer drive (pos. 654) and two set screws (pos. 9).

Motor size [kW]	CRN 1, 3, 5	CRN 10, 15, 20	CRN 32, 45, 64, 90
0.37 - 0.55	*96749047*	*96749065*	-
0.75 - 1.1	*96749048*	*96749066*	-
1.5	*96749049*	*96749067*	*96749072*
2.2	*96749051*	*96749068*	*96749074*
3.0	*96749062*	*96749069*	*96749075*
4.0	*96749063*	*96749070*	*96749076*
5.5	*96749064*	*96749071*	*96749077*
7.5	-	*96749078*	*96749083*
11 - 15 - 18.5	-	*96749080*	*96749084*
22	-	-	*96749086*

Outer drive Nema motors

Motor size [Hp] / [Frame]	CRN 1, 3, 5	CRN 10, 15, 20	CRN 32, 45, 64, 90
0.5 - 2.0	*98406709*	*98406734*	-
3.0 / 56C	*98406710*	*98406735*	-
3.0 / 182TC	*98406731*	*98406736*	*98406739*
5.0	*98406732*	*98406737*	*98406740*
7.5	*98406733*	*98406738*	*98406741*
10.0	-	*98558436*	*98558548*
15.0 - 20.0	-	*98558438*	*98558549*
25.0 - 30.0	-	*98558546*	*98558554*

Radial bearing (from 0744)

Pos.	Description	1, 3, 5	10, 15, 20	32, 45, 64, 90
		96748870	*97526492*	*97526493*
655	Bearing ring	1	1	1

Spacer (from 0744)

Pos.	Description	CRN 1 to 20	
		CRN 32 to 90 to 1112	CRN 32 to 90 from 1111
		96750527	*97855436*
662	Spacer for bearing house, 1 mm	1	1
	Spacer for bearing house, 1.5 mm	1	1
	Spacer for bearing house, 2 mm	1	1

Thrust bearing (from 0744)

Pos.	Description	*96748866*
653	Thrust bearing, rotating, 3 holes cpl.	1
	Thrust bearing, rotating, 6 holes cpl.	-

Upthrust bearing (from 0744)

Pos.	Description	*96748884*
659	Upthrust bearing, outer part	1

Kit support washer (from 0744)

Pos.	Description	CRN 1s, 1, 3	CRN 5	CRN 10, 15, 20	CRN 32, 45, 64, 90
		98345811	*98345790*	*97949632*	*98345812*
660	Kit support washer	1	1	1	1

CRI, CRN 1, 3, 5 MAGdrive produced before week 44, 2007

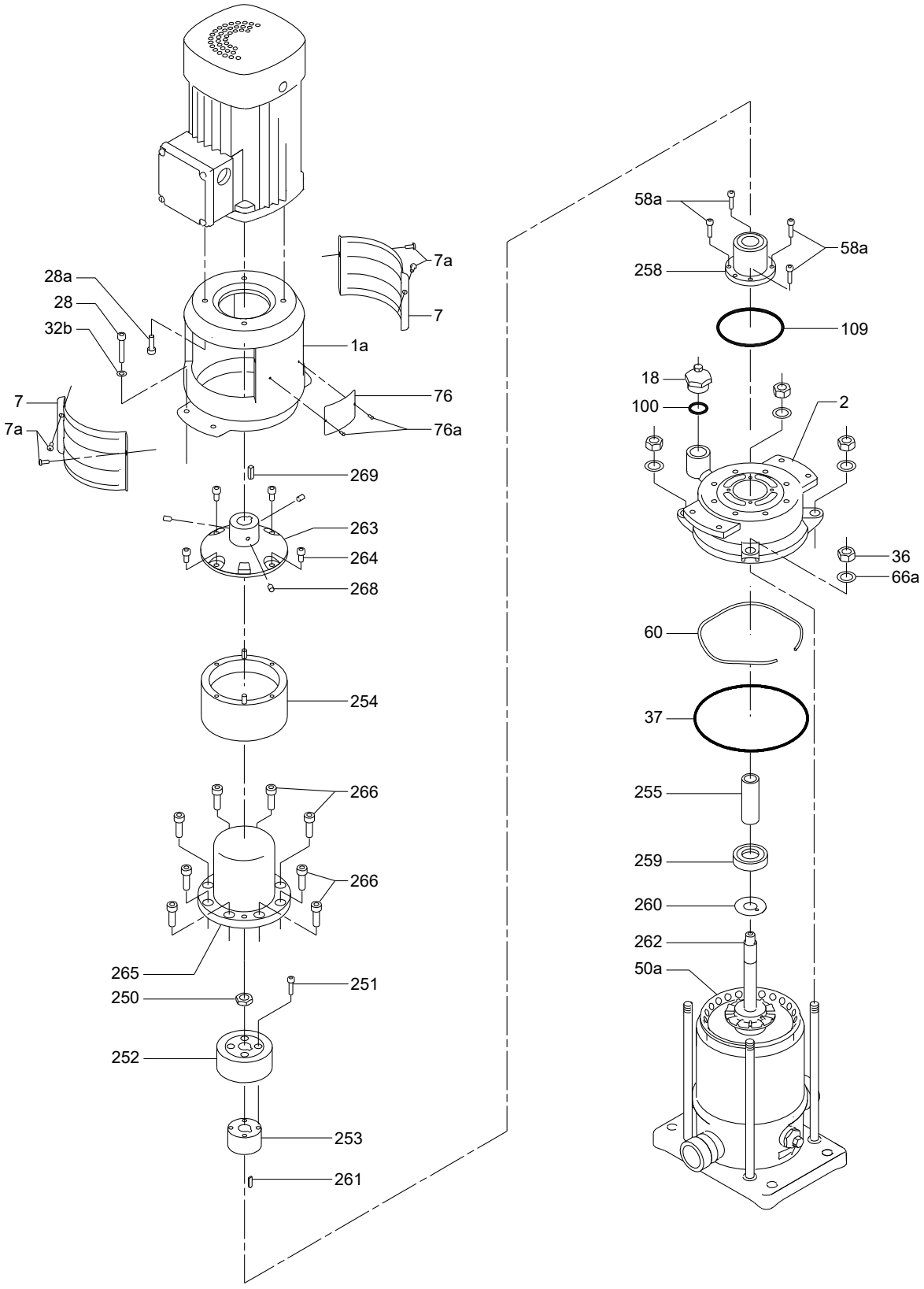

CRN 1, 1s, 3, 5, 10, 15, 20 MAGdrive produced from week 44, 2007

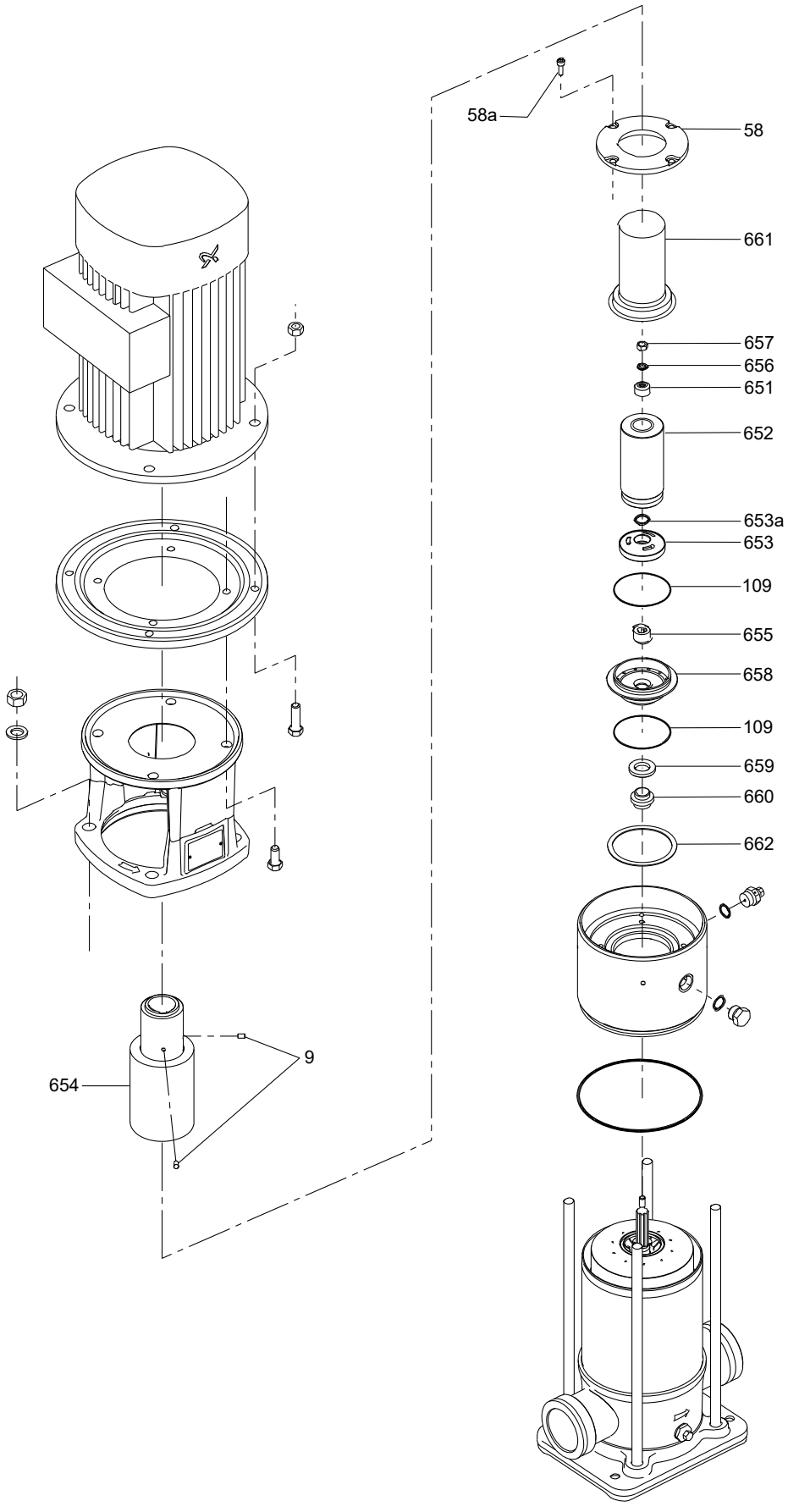

CRN 32, 45, 64, 90 MAGdrive produced from week 44, 2007

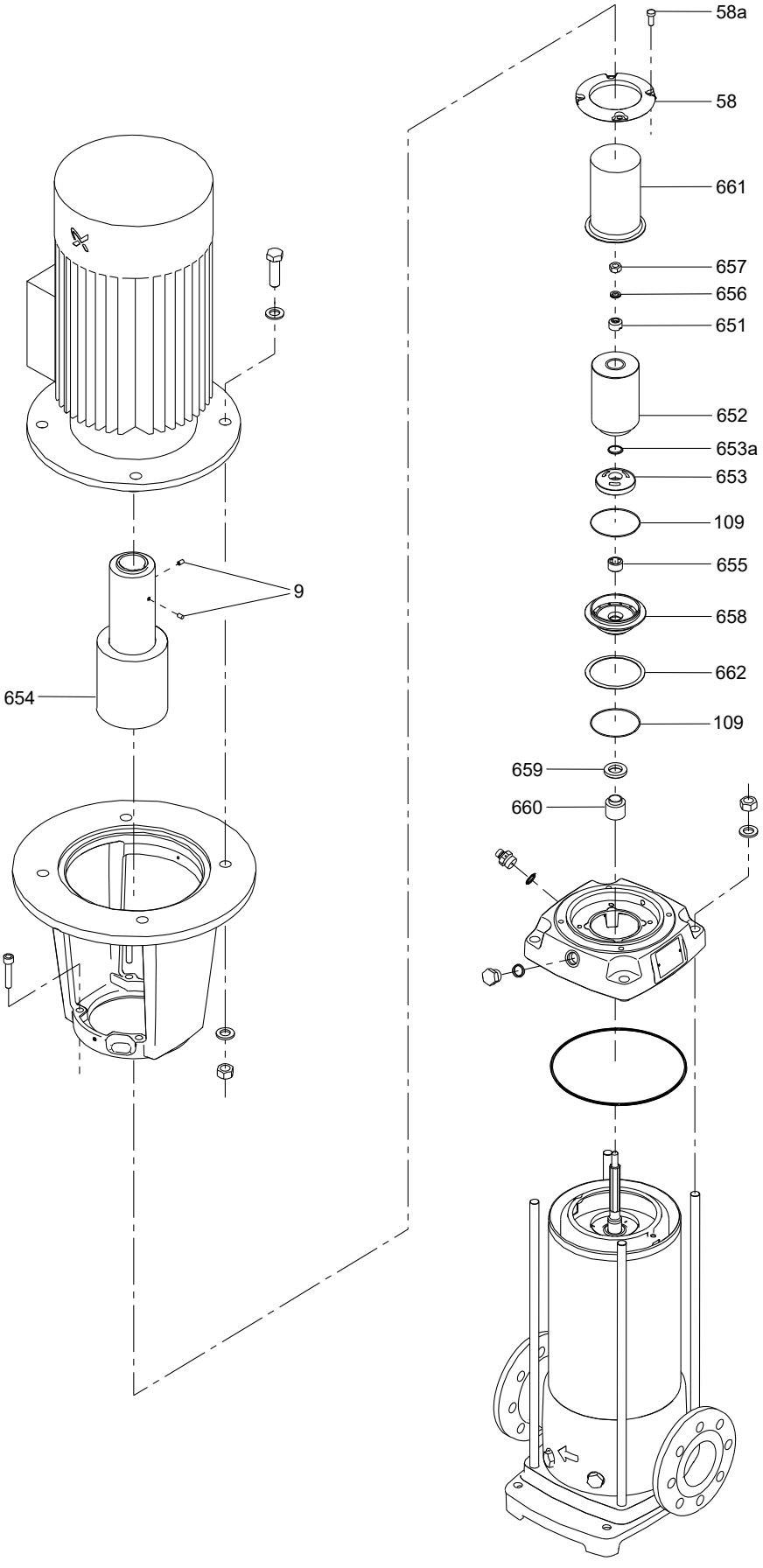

19. CR (S)

CR, CRI, CRN 1 (S)

50/60 Hz, Models C, D

Chamber stack complete

Consists of items: 4, 4a, 5a, 47a, 49, 50a, 51, 61, 64, 64a, 64c, 66, 67		
Pump type	CR/CRI 1 (S)	CRN 1 (S)
Number of stages	Kit No	Kit No
2	*96479046*	*96453507*
3	*96479047*	*96453508*
4	*96479048*	*96453509*
5	*96479049*	*96453510*
6	*96479060*	*96453511*
7	*96479061*	*96453512*
8	*96479062*	*96453513*
9	*96479063*	*96453514*
10	*96479060*	*96453515*
11	*96453494*	*96453516*
12	*96453495*	*96453517*
13	*96453496*	*96453518*
15	*96453497*	*96453519*
17	*96453498*	*96453520*
19	*96453499*	*96453521*
21	*96453500*	*96453522*
23	*96453501*	*96453523*
25	*96453502*	*96453524*
27	*96453503*	*96453525*
29	-	-
30	*96453504*	*96453526*
31	-	-
33	*96453505*	*96453527*
36	*96453506*	*96453528*

Coupling guard

Description	Kit No
MG 71 - 80	*96505130*
MG 90 - 132	*96505131*
NEMA, F 182/213 TC	*96505132*

Content

Pos.	Description	Quantity
7	Coupling guard	2
7a	Screw	4

O-ring

Description	Kit No
EPDM	*96455090*
FKM	*96455091*
FXM	*96463944*

Content

Pos.	Description	Quantity
37	O-ring137.5 x 3.3	2
38	O-ring 16.3 x 2.4	1
100	O-ring 16.3 x 2.4	2
109	O-ring 22 x 2.75	1

Plug

Description	Kit No
EPDM/FKM	*96505133*
EPDM/FKM, NEMA	*96511103*

Content

Pos.	Description		Quantity
18	Air vent screw		1
23a	Pipe plug		1
23b	Pipe plug		1
25	Drain plug with bypass valve		1
38	O-ring 16.3 x 2.4	EPDM	1
		FKM	1
100	O-ring 16.3 x 2.4	EPDM	2
		FKM	2

Shaft seal

Description	Kit No
HQQE	*96455086*
HQQV	*96455087*
HQQK	*96533326*
HQQF	*96533327*
HQBE	*96455088*
HQBV	*96455089*
HQBK	*96491375*
HUBE	*96455082*
HUBV	*96455083*
HUBK	*96533322*
HUBF	*96533323*
HUUE	*96455084*
HUUV	*96455085*
HUUV[1]	*91043611*
HUUK	*96533324*
HUUF	*96533325*

[1] Silicone-free cartridge

Content

Pos.	Description	Quantity
105	Shaft seal	1

Wear parts

Pos.	Bearings	Kit No			
	Silicon carbide	***96455095***	***96455092***	***96455093***	***96455094***
	Bronze	***96455102***	***96455104***	***96455105***	***96455106***
	Carbon graphite	***96460140***	***96455110***	***96455111***	***96455112***
	Description/ stages	**-9**	**-19**	**-27**	**-36**
4a	Chamber with bearing	1	2	3	4
39	Gasket	2	2	2	2
45	Neck ring	8	17	24	32
47a	Bearing ring, rotating	1	2	3	4
64a	Spacing pipe	1	2	3	4
64c	Clamp splined	1	1	1	1
65	Neck ring retainer	8	17	24	32
66	Lock washer	1	1	1	1
67	Lock nut	1	1	1	1

CR, CRI, CRN 1 (S)

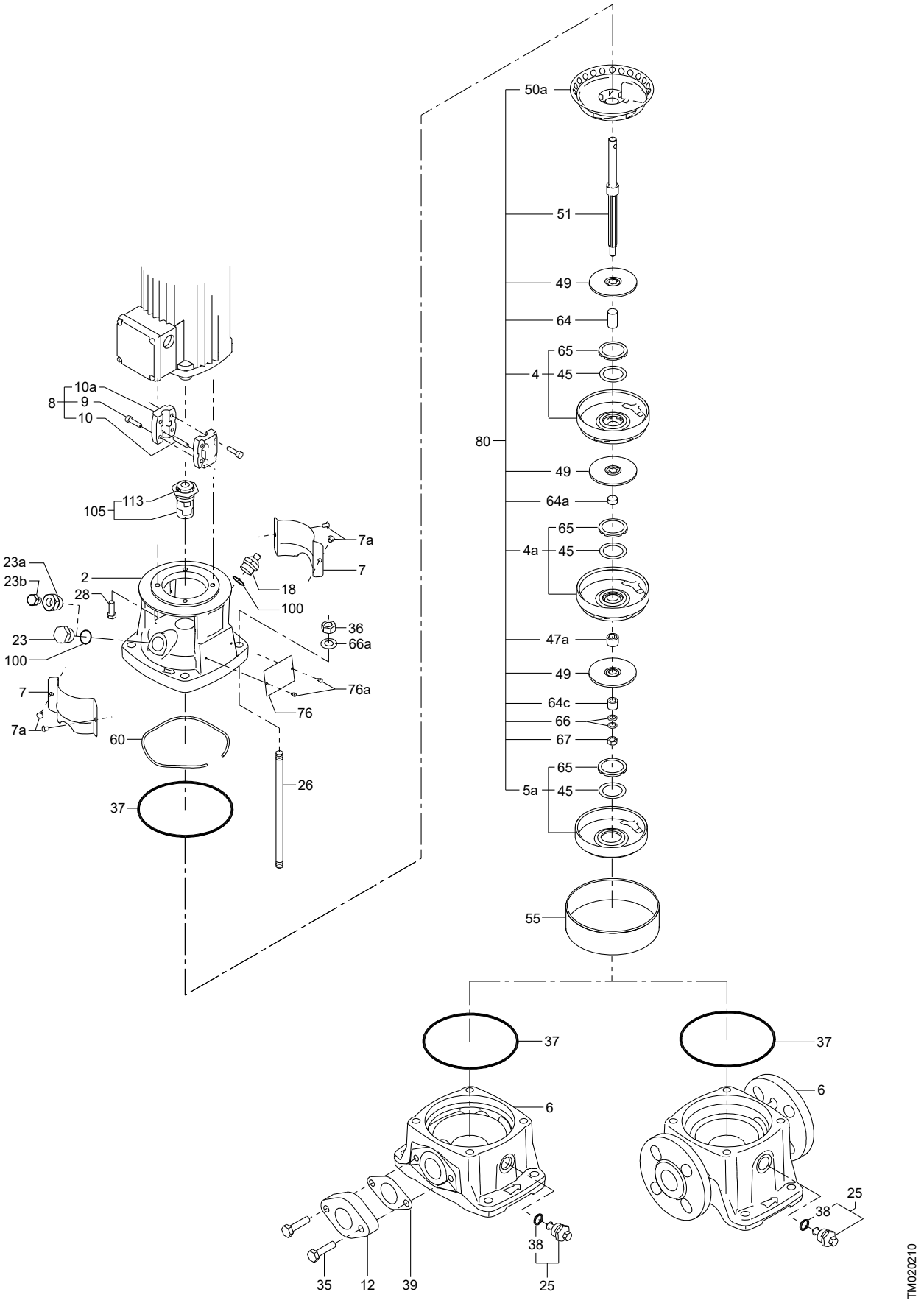
50a
51
49
64
65
4
45
80
49
64a
65
4a
45
47a
49
64c
66
67
65
5a
45
55
37
37
6
6
25
38
38
25
35
12
39
8
10a
9
10
105
113
7a
7
23a
23b
2
28
18
100
36
66a
23
100
76a
7
7a
76
60
26
37
TM020210

CR, CRI, CRN 2 (S)
50/60 Hz, Models C, D

Chamber stack complete

Consists of items: 4, 4a, 5a, 47a, 49, 50a, 51, 61, 64, 64a, 64c, 66, 67	Kit No
Number of stages	
2	*405208*
3	*405209*
4	*405210*
5	*405211*
6	*405212*
7	*405213*
8	*405221*
9	*405214*
10	*405222*
11	*405215*
12	*405223*
13	*405216*
15	*405217*
18	*405218*
22	*405219*
26	*405220*

Coupling complete

Motor/pump shaft diameter [mm]		Kit No
14/12		*415060*
19/12		*415061*
24/12		*415062*
28/12		*415063*
15.8/12	NEMA	*415314*
28.5/12	NEMA	*415315*

Content

Pos.	Description	Quantity
-	Coupling half	2
9	Screw	4
10	Pin	1

Impeller

Pos.	Description/ Kit No	*405083*
49	Impeller	2
64	Spacing pipe for impeller	2

Shaft seal

Pos.	Kit No	*985167*	*405146*	*985769*
	Description	AUUE/V	AUUE/V	AUUE
37	Sleeve gasket	2		
37	Vulcanised sleeve gasket (NBR)	-	2	-
37	Vulcanised sleeve gasket (EPDM)	-	-	2
105	Shaft seal	1	1	1

Shaft seal

Material	Kit No
BUBE	*405096*
BUBV	*405097*
RUUE/V	*985727*
CVBV	*985186*
AUUK	*985720*
AUBK	*985721*
BQQE	*405348*
BQQV	*405347*

Content

Pos.	Description	Quantity
37	Sleeve gasket	2
105	Shaft seal	1

Wear parts

Pos.	Kit No	*405130*	*405131*	*405158*	*405132*
	Number of stages	2-9	11-15	13-18	22-26
	Description				
4a	Bearing chamber	1	2	2	3
37	Sleeve gasket	2	2	2	2
38	Drain plug gasket *	1	1	1	1
45	Neck ring	8	13	16	23
47a	Bearing ring	1	2	2	3
61	Spacer for shaft seal	1	1	1	1
65	Neck ring retainer	8	13	16	23
64c	Spacer	1	1	1	1
66	Spring washer	1	1	1	1
67	Lock nut	1	1	1	1
100	O-ring *	1	1	1	1

* EPDM and FKM

CRN 2 (S)

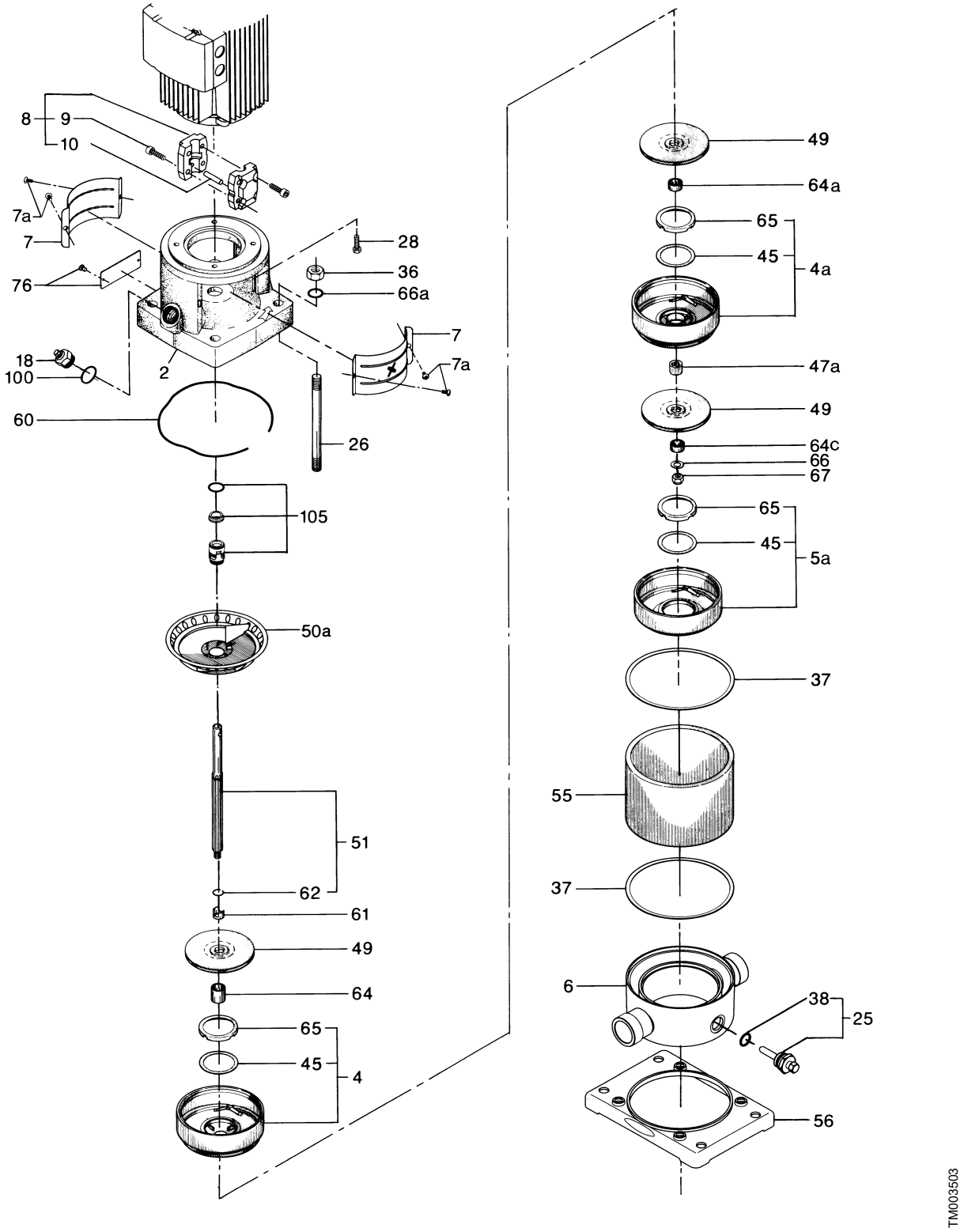
8
9
10
7a
7
76
18
100
60
2
28
36
66a
7
7a
26
105
50a
51
62
61
49
64
65
45
4
49
64a
65
45
4a
47a
49
64c
66
67
65
45
5a
37
55
37
6
38
25
56
TM003503

CRN 4 (S)
50/60 Hz, Models C, D

Chamber stack complete

Consists of items: 4, 4a, 5a, 47a, 49, 50a, 51, 61, 64, 64a, 64c, 66, 67	Kit No
Number of stages	
1	*415268*
2	*415269*
3	*415270*
4	*415271*
5	*415272*
6	*415273*
7	*415274*
8	*415275*
10	*415276*
12	*415277*
14	*415278*
16	*415279*
19	*415280*
22	*415281*

Coupling complete

Motor/pump shaft diameter [mm]		*Kit No*
14/12		*415060*
19/12		*415061*
24/12		*415062*
28/12		*415063*
38/12		*415065*
15.8/12	NEMA	*415314*
28.5/12	NEMA	*415315*

Content

Pos.	Description	Quantity
-	Coupling half	2
9	Screw	4
10	Pin	1

Impeller

Pos.	Description/ Kit No	*415232*
49	Impeller	2
64	Spacing pipe for impeller	2

Shaft seal

Pos.	Kit No	*985167*	*405146*	*985769*
	Description	AUUE/V	AUUE/V	AUUE
37	Sleeve gasket	2		
37	Vulcanised sleeve gasket (NBR)	-	2	-
37	Vulcanised sleeve gasket (EPDM)	-	-	2
105	Shaft seal	1	1	1

Shaft seal

Material	Kit No
BUBE	*405096*
BUBV	*405097*
RUUE/V	*985727*
CVBV	*985186*
AUUK	*985720*
AUBK	*985721*
BQQE	*405348*
BQQV	*405347*

Content

Pos.	Description	Quantity
37	Sleeve gasket	2
105	Shaft seal	1

Wear parts

Pos.	Kit No	*415289*	*415290*	*415331*	*415291*
	Number of stages	1-6	7-12	14-16	19-22
	Description				
4a	Bearing chamber	1	2	3	4
37	Sleeve gasket	2	2	-	-
37	Vulcanised sleeve gasket	-	-	2	2
38	Drain plug gasket *	1	1	1	1
45	Neck ring	5	10	13	18
47a	Bearing ring	1	2	3	4
61	Spacer for shaft seal	1	1	1	1
64c	Spacer	1	1	1	1
65	Neck ring retainer	5	10	13	18
66	Spring washer	1	1	1	1
67	Lock nut	1	1	1	1
100	O-ring *	1	1	1	1

* EPDM and FKM

CRN 4 (S)

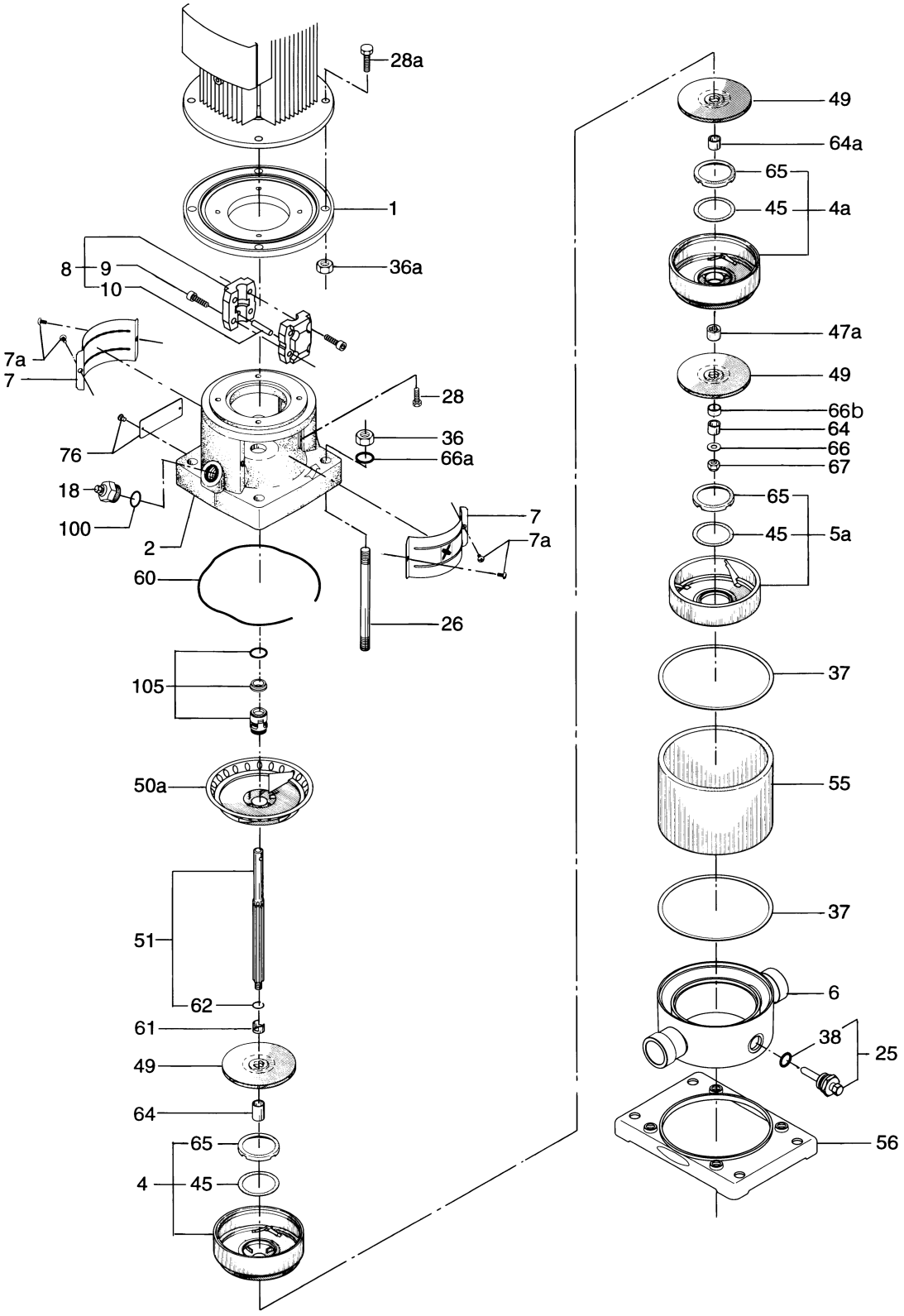

TM003502

CRN 8 (S)
50/60 Hz, Models A, B

Coupling complete

Motor/pump shaft diameter [mm]		Kit No
14/16		*339114*
19/16		*339119*
24/16		*339124*
28/16		*339128*
38/16		*339138*
42/16		*339142*
15.9/16	NEMA	*425260*
28.6/16	NEMA	*425261*
34.9/16	NEMA	*425262*
41.3/16	NEMA	*425263*

Content

Pos.	Description	Quantity
-	Coupling half	2
9	Screw	4
10	Pin	1

Chamber stack complete

Consists of items: 3, 3a, 4, 4a, 44, 47a, 49, 51, 61, 64, 64a, 64c, 64d, 66, 67	Kit No
Number of stages	
1	*425219*
2	*425220*
3	*425221*
4	*425222*
5	*425223*
6	*425224*
8	*425225*
10	*425226*
12	*425227*
14	*96588257*
16	*425229*
18	*425230*
20	*425231*

Flange

Pos.	Kit No	*339912*	*339913*	NEMA *339914*	NEMA *339915*
	Description	EPDM	FKM	EPDM	FKM
201	Clamping ring	1	1	1	1
202	Gasket ring	1	1	1	1
203	Lock ring	1	1	1	1
204	O-ring	1	1	1	1

Shaft seal

Material	Kit No
AUUE/V	*985204*
BUBE	*425062*
BUBV	*425063*
RUUE/V	*985838*

Content

Pos.	Description	Quantity
37	Sleeve gasket	2
78	O-ring	1
98	O-ring	1
105	Shaft seal	1

Shaft seal

Material	Kit No
AUUE/V	*425085*
AUUE	*985874*

Content

Pos.	Description	Quantity
37	Vulcanised sleeve gasket	2
105	Shaft seal	1

Shaft seal

Material	Kit No
RUUK	*985829*
AUUK	*985828*
AUAK	*985834*
BQQE	*425763*
BQQV	*425762*

Content

Pos.	Description	Quantity
37	Sleeve gasket	2
105	Shaft seal	1

Wear parts

Pos.	Number of stages	1-6	8-12	10-14	16-20
	Kit No	*425069*	*425070*	*425266*	*425071*
	Description				
4a	Bearing chamber	1	2	2	3
6e	O-ring in base *	1	1	1	1
37	Sleeve gasket	2	2	-	-
37	Vulcanised sleeve gasket	-	-	2	2
38	Drain plug gasket *	1	1	1	1
45	Neck ring	5	10	12	17
47a	Bearing ring	1	2	2	3
61	Spacer for shaft seal	1	1	1	1
62	Stop ring	1	1	1	1
64c	Spacer	1	1	1	1
65	Neck ring retainer	5	10	2	17
66	Spring washer	1	1	1	1
67	Lock nut	1	1	1	1
78	O-ring	1	1	1	1
98	O-ring	1	1	1	1
100	O-ring for air vent screw *	1	1	1	1

* EPDM and FKM

CRN 8 (S)

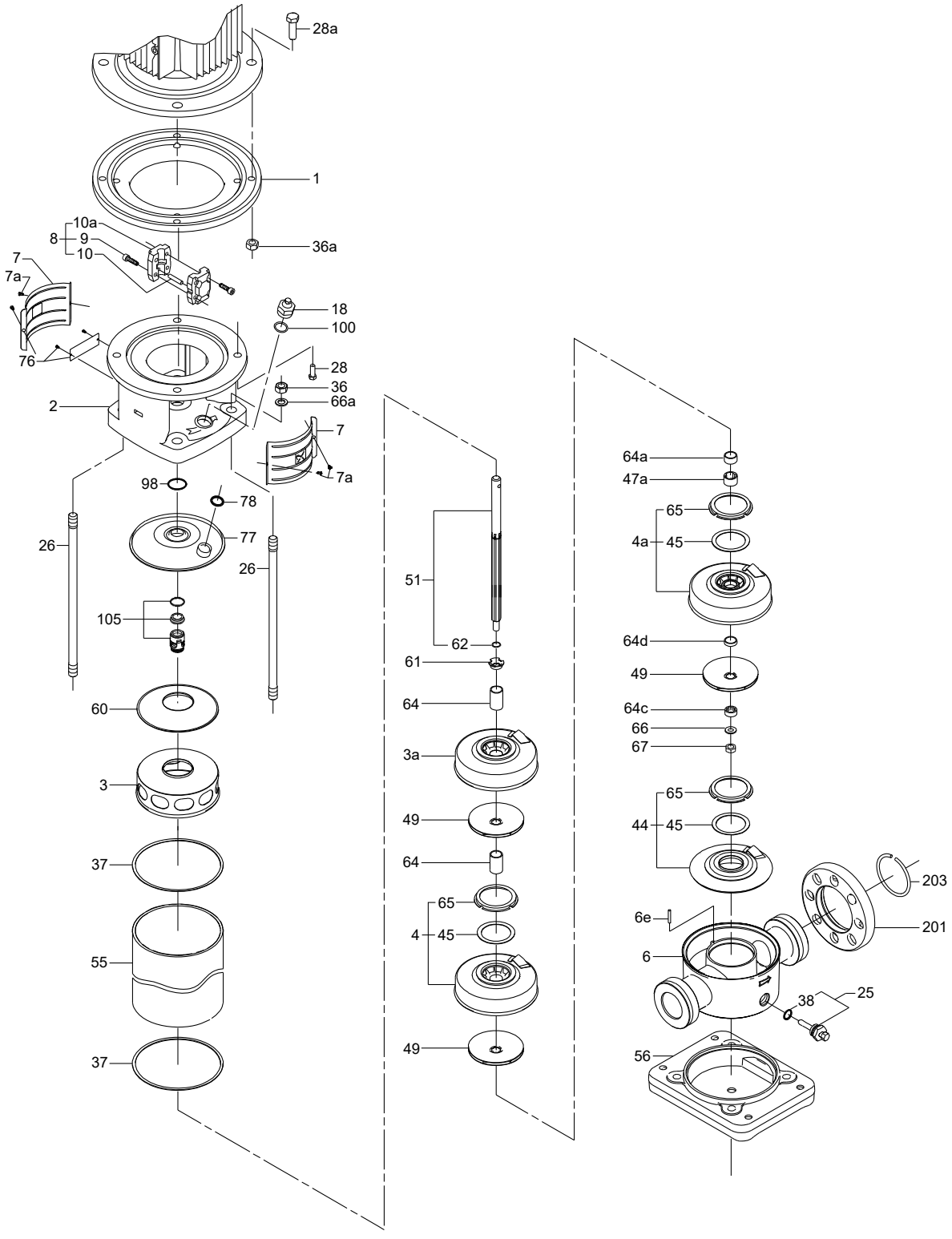
28a
1
10a
8
9
10
36a
7
7a
18
100
76
28
36
66a
2
7
7a
98
78
26
77
26
105
60
3
37
55
37
51
62
61
64
3a
49
64
65
4
45
49
64a
47a
65
4a
45
64d
49
64c
66
67
65
44
45
203
6e
201
6
38
25
56
TM002439

CRN 16 (S)
50/60 Hz, Models A, B

Coupling complete

Motor/pump shaft diameter [mm]		Kit No
24/16		*339124*
28/16		*339128*
38/16		*339138*
42/16		*339142*
28.6/16	NEMA	*425261*
34.9/16	NEMA	*425262*
41.3/16	NEMA	*425263*

Content

Pos.	Description	Quantity
-	Coupling half	2
9	Screw	4
10	Pin	1

Chamber stack complete

Consists of items: 3, 3a, 4, 4a, 44, 47a, 49, 51, 61, 64, 64a, 64c, 64d, 66, 67, 69	Kit No
Number of stages	
1	*335094*
2	*335220*
3	*335221*
4	*335222*
5	*335223*
6	*335224*
7	*335225*
8	*335226*
10	*335227*
12	*335228*
14	*335229*
16	*335230*

Flange

Description			NEMA	NEMA
	EPDM	FKM	EPDM	FKM
Kit No	*339912*	*339913*	*339914*	*339915*
Clamping ring	1	1	1	1
Gasket ring	1	1	1	1
Lock ring	1	1	1	1
O-ring	1	1	1	1

Shaft seal

Material	Kit No
AUUE/V	*985204*
BUBE	*425062*
BUBV	*425063*
RUUE/V	*985838*
BQQE	*425763*
BQQV	*425762*

Content

Pos.	Description	Quantity
37	Sleeve gasket	2
78	O-ring	1
98	O-ring	1
105	Shaft seal	1

Shaft seal

Material	Kit No
AUUE/V	*425085*

Content

Pos.	Description	Quantity
37	Vulcanised sleeve gasket	2
105	Shaft seal	1

Shaft seal

Material	Kit No
RUUK	*985829*
AUUK	*985828*
AUAK	*985834*

Content

Pos.	Description	Quantity
37	Sleeve gasket	2
105	Shaft seal	1

Wear parts

Pos.	Number of stages	2-6	7-10	7-10	12-16
	Description/Kit No	*335081*	*335082*	*335126*	*335083*
4a	Bearing chamber	1	2	2	3
6e	O-ring in base	1	1	1	1
37	Sleeve gasket	2	2	-	-
37	Vulcanised sleeve gasket	-	-	2	2
38	Drain plug gasket *	1	1	1	1
45	Neck ring	5	8	8	13
47a	Bearing ring	1	2	2	3
49c	Wear ring	6	10	10	16
61	Spacer for shaft seal	1	1	1	1
62	Stop ring	1	1	1	1
64c	Spacer	1	1	1	1
65	Neck ring retainer	5	8	8	13
66	Spring washer	1	1	1	1
67	Lock nut	1	1	1	1
78	O-ring	1	1	1	1
98	O-ring	1	1	1	1
100	O-ring for air vent screw *	1	1	1	1

* EPDM and FKM

CRN 16 (S)

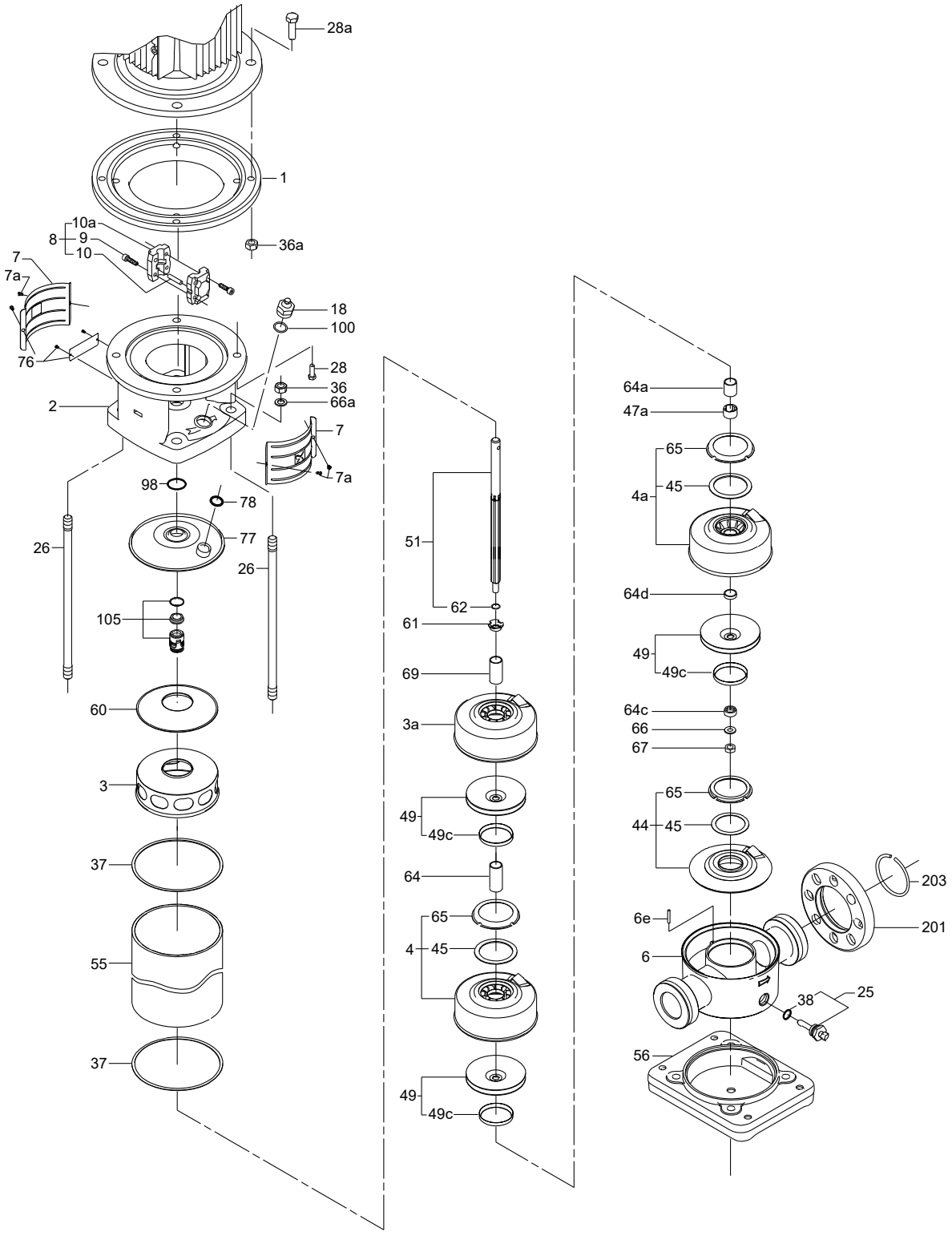
28a
1
10a
8
9
10
36a
7
7a
18
100
28
36
66a
76
2
7
7a
98
78
77
26
26
105
60
3
37
55
37
51
62
61
69
3a
49
49c
64
65
4
45
49
49c
64a
47a
65
4a
45
64d
49
49c
64c
66
67
65
44
45
203
6e
201
6
38
25
56
TM002431

20. CR SF

CRN 2 SF

50/60 Hz, Model D

Chamber stack complete

Consists of items: 4, 4a, 5a, 47a, 49, 51, 61, 64, 64b, 64c, 66, 67, 69	Kit No
Number of stages	
18 (16 impellers)	*405226*
26 (24 impellers)	*405227*

Coupling complete

Pos.	Kit No	*415063*
	Motor/pump shaft diameter [mm]	**28/12**
	Description	
-	Coupling half	2
9	Screw	4
10	Pin	1

Impeller and spacing pipe

Pos.	Kit No	*405083*
	Description	
49	Impeller	2
64	Spacing pipe	2

Shaft seal

Pos.	Kit No	*405145*	*405146*
	Description	**AUUE/V**	**AUUE/V**
37	Vulcanised sleeve gasket	-	2
105	Shaft seal	1	1

Wear parts

Pos.	Description/ Kit No	*405147*	*405148*
	Number of stages	**16**	**24**
4a	Bearing chamber	2	3
37	Vulcanised sleeve gasket	2	2
38	Drain plug gasket *	1	1
45	Neck ring	14	21
47a	Bearing ring	2	3
61	Spacer for shaft seal	1	1
65	Neck ring retainer	14	21
64c	Spacer	1	1
66	Spring washer	1	1
67	Lock nut	1	1
100	O-ring *	1	1

* EPDM and FKM

CRN 2 SF

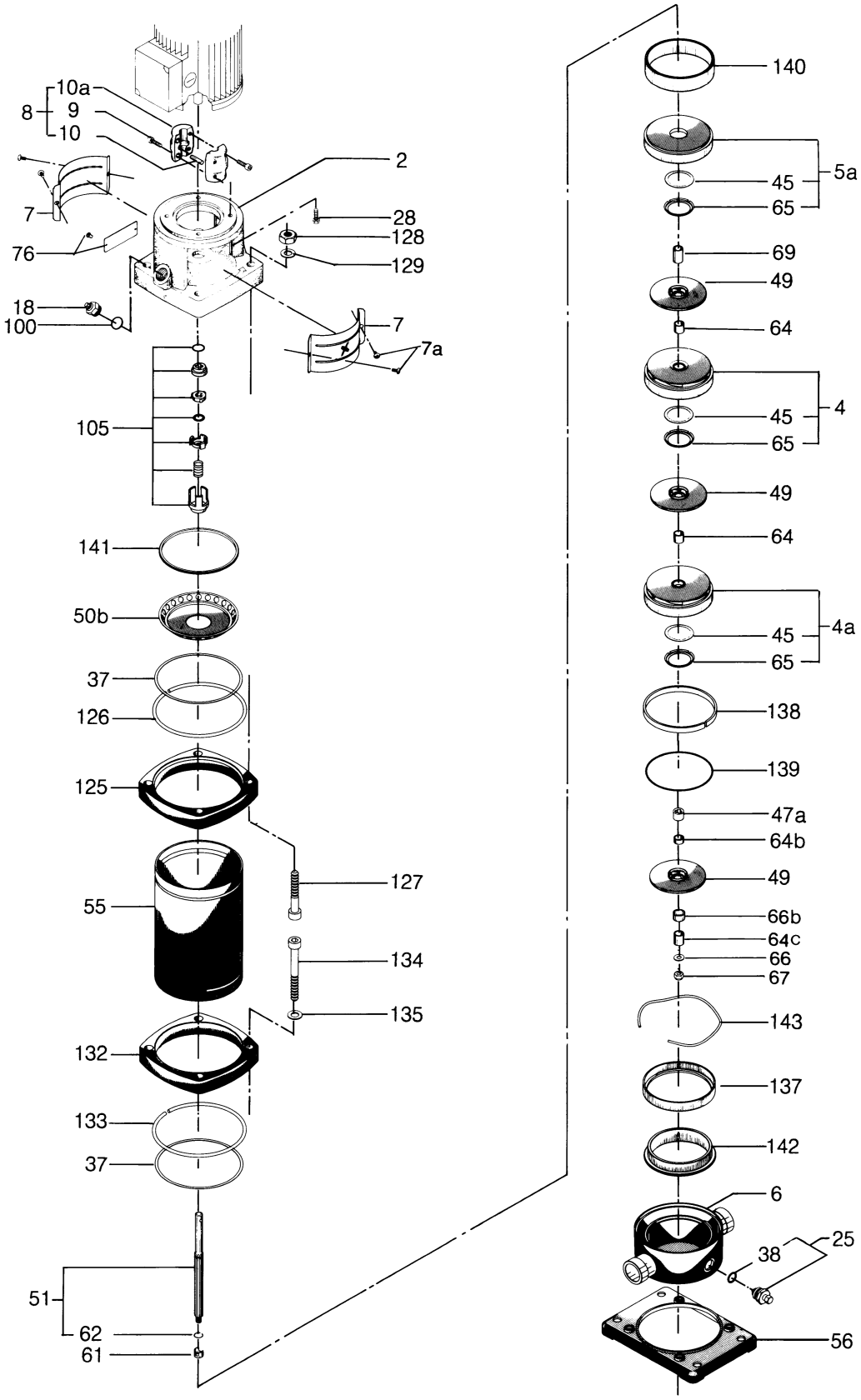
10a
8
9
10
2
7
28
128
129
76
18
100
7
7a
105
141
50b
37
126
125
127
55
134
135
132
133
37
51
62
61
140
5a
45
65
69
49
64
4
45
65
49
64
4a
45
65
138
139
47a
64b
49
66b
64c
66
67
143
137
142
6
38
25
56
TM002978

CRN 4 SF

50/60 Hz, model D

Chamber stack complete

Consists of items: 4, 4a, 5a, 47a, 49, 51, 61, 64, 64b, 64c, 66, 66b, 67, 69	Kit No
Number of stages	
16 (15 impellers)	*415366*
22 (21 impellers)	*415306*

Coupling complete

Pos.		50 Hz	60 Hz
	Kit No	*415063*	*415065*
	Motor/pump shaft diameter [mm]	**28/12**	**38/12**
	Description		
10a	Coupling half	2	2
9	Screw	4	4
10	Pin	1	1

Impeller

Pos.		
	Kit No	*415232*
	Description	
49	Impeller	2
64	Spacing pipe for impeller	2

Shaft seal

Pos.			
	Kit No	*405145*	*405146*
	Description	**AUUE/V**	**AUUE/V**
37	Vulcanised sleeve gasket		2
105	Shaft seal	1	1

Wear parts

Pos.			
	Kit No	*416095*	*416096*
	Number of stages	**15**	**21**
	Description		
4a	Bearing chamber	3	4
37	Vulcanised sleeve gasket	2	2
38	Drain plug gasket *	1	1
45	Neck ring	12	17
47a	Bearing ring	3	4
61	Spacer for shaft seal	1	1
65	Neck ring retainer	12	17
64c	Spacer	1	1
66	Spring washer	1	1
66b	Spacing pipe	1	1
67	Lock nut	1	1
100	O-ring *	1	1

* EPDM and FKM

CRN 4 SF

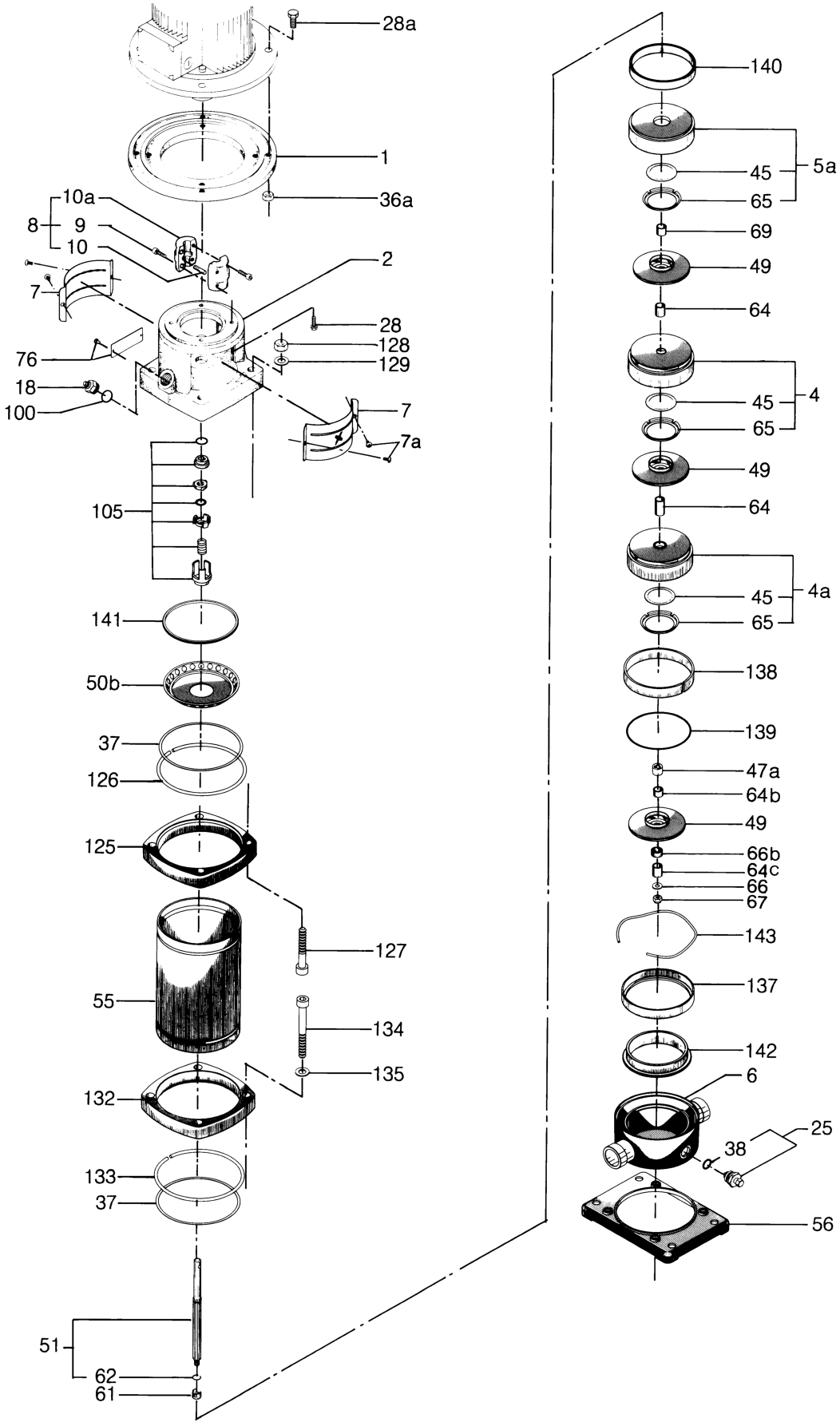
28a
1
36a
10a
8
9
10
2
7
28
128
129
76
18
100
7
7a
105
141
50b
37
126
125
127
55
134
135
132
133
37
51
62
61
140
5a
45
65
69
49
64
4
45
65
49
64
4a
45
65
138
139
47a
64b
49
66b
64c
66
67
143
137
142
6
25
38
56
TM002979

CRN 5 SF

Chamber stack complete

Pos.	SiC/SiC bearings		Kit No
80	24	EPDM	*96524994*
		FKM	*96524995*
	34	EPDM	*96524996*
		FKM	*96524997*

Coupling complete

Pos.	Kit No	*415065*	*96478700*
	Motor/pump shaft diameter	**38/12**	**34.9/12**
	Description		**NEMA**
9	Screw	4	4
10	Pin	1	1
10a	Coupling half	2	2

Coupling guard

Pos.	Kit No	*96505131*	*96505132*
	Description	**MG 90 - 132**	**NEMA F 182/213 TC**
7	Coupling guard	2	2
7a	Screw	4	4

O-ring

Pos.	Kit No	*96455090*	*96455091*
	Description	**EPDM**	**FKM**
37	O-ring	2	2
38	O-ring	1	1
100	O-ring	2	2
109	O-ring	1	1

Plug

Pos.	Kit No		*96505133*	*96511103*
	Description		**EPDM/FKM**	**EPDM/FKM/ NEMA**
18	Air vent screw		1	1
23a	Pipe plug		1	1
23b	Pipe plug		1	1
25	Drain plug with bypass valve		1	1
38	O-ring	EPDM	1	1
		FKM	1	1
100	O-ring	EPDM	2	2
		FKM	2	2

Shaft seal

Pos.	Kit No	*96455086*	*96455087*
	Description	**HQQE**	**HQQV**
105	Shaft seal	1	1

Wear parts (silicon carbide bearings)

Pos.	Kit No	*96524998*	*96524999*
	Description/stages	**–24**	**–34**
4a	Chamber with bearing	5	6
45	Neck ring	24	34
47a	Bearing ring, rotating	5	6
64a	Spacing pipe	5	6
64c	Clamp splined	1	1
65	Neck ring retainer	24	34
66	Lock washer	1	1
67	Lock nut	1	1

CRN 5 SF

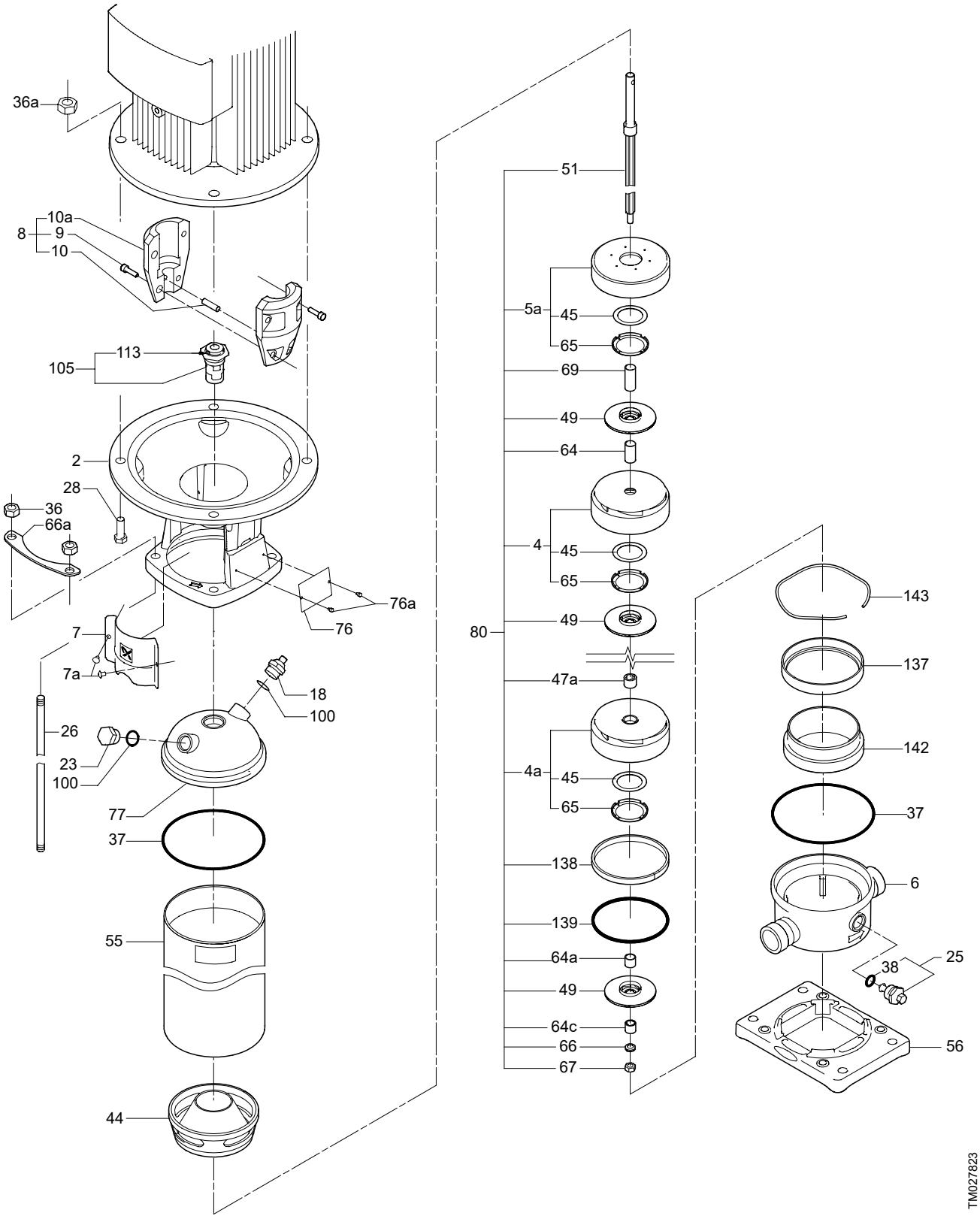
36a
10a
8
9
10
113
105
2
28
36
66a
76a
76
7
7a
18
100
26
23
100
77
37
55
44
51
5a
45
65
69
49
64
4
45
65
80
49
47a
4a
45
65
138
139
64a
49
64c
66
67
143
137
142
37
6
25
38
56
TM027823

CRN 8 SF

50/60 Hz, model B

Chamber stack complete

Consists of items: 3, 4, 4a, 4b, 67, 66, 64c, 49, 44, 69, 64d, 47a, 64a, 64, 61, 51, 140	Kit No
Number of stages	
14 (13 impellers)	*425606*
20 (19 impellers)	*425607*

Coupling complete

Pos.	Kit No	*339138*	*339142*
	Motor/pump shaft diameter [mm]	**38/16**	**42/16**
	Description		
10a	Coupling half	2	2
9	Screw	4	4
10	Pin	1	1

Coupling complete, NEMA

Pos.	Kit No	*425262*	*425263*
	Motor/pump shaft diameter [mm]	**34.9/16**	**41.3/16**
	Description		
10a	Coupling half	2	2
9	Screw	4	4
10	Pin	1	1

Shaft seal

Pos.	Kit No	*425084*	*425085*
	Description	**AUUE/V**	**AUUE/V**
37	Vulcanised sleeve gasket	-	2
105	Shaft seal	1	1

Wear parts

Pos.	Kit No	*425086*	*425087*
	Number of stages	**13**	**19**
	Description		
4a	Bearing chamber	1	2
4b	Bearing chamber	1	1
37	Vulcanised sleeve gasket	2	2
38	Drain plug gasket *	1	1
45	Neck ring	11	16
47a	Bearing ring	2	3
61	Spacer for shaft seal	1	1
62	Stop ring	1	1
64c	Spacer	1	1
65	Neck ring retainer	11	16
66	Spring washer	1	1
67	Lock nut	1	1
78	O-ring	1	1
98	O-ring	1	1
100	O-ring for air vent screw *	1	1

* EPDM and FKM

CRN 8 SF

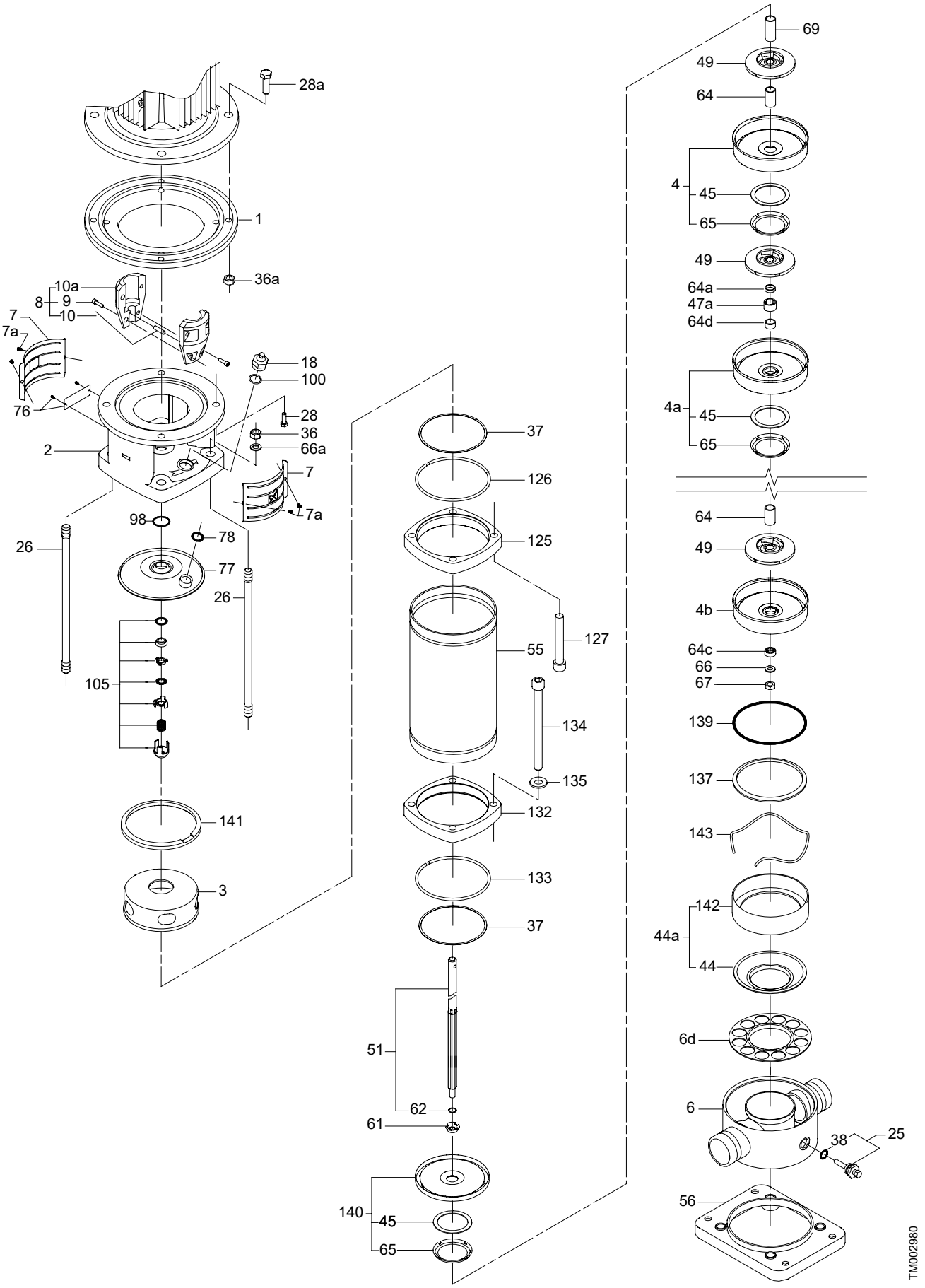
28a
1
36a
10a
8
9
10
7
7a
18
100
76
28
36
66a
2
7
7a
98
78
26
77
26
105
141
3
69
49
64
4
45
65
49
64a
47a
64d
4a
45
65
64
49
4b
64c
66
67
139
137
143
142
44a
44
6d
6
38
25
56
37
126
125
55
127
134
135
132
133
37
51
62
61
140
45
65
TM002980

CRN 10 SF

Chamber stack complete (silicon carbide bearings)

Pos.	Number of stages		Kit No
80	17	EPDM	*96524471*
		FKM	*96525098*
	21	EPDM	*96524472*
		FKM	*96525099*

Coupling complete

Pos.		Description/ Kit No	*96511351*	*96511352*
		Motor/pump shaft diameter [mm]	38/16	42/16
8	9	Screw	4	4
	10	Pin	1	1
	10a	Coupling half	2	2

Coupling complete, NEMA

Pos.		Description/ Kit No	*96511356*
		Motor/pump shaft diameter [mm]	41.3/16
8	9	Screw	4
	10	Pin	1
	10a	Coupling half	2

Coupling guard

Pos.	Kit No	*96509613*	*96509614*
	Description	MG 132 182TC - 215TC	MG 160 254TC - 284TSC
7	Coupling guard	2	2
7a	Screw	4	4

O-ring, standard

Pos.	Description/ Kit No	EPDM	FKM
		96524520	*96524521*
37	O-ring	2	2
38	O-ring	1	1
38a	O-ring	1	1
46a	O-ring	1	1
46b	O-ring	1	1
100	O-ring	2	2

O-ring, double seal

Pos.	Description/ Kit No	EPDM	FKM
		96757608	*96757611*
37	O-ring	3	3
38	O-ring	-	-
38a	O-ring	1	1
46a	O-ring	1	1
46b	O-ring	1	1
100	O-ring	7	7

Plug

Pos.	Description/ Kit No	*96511312*
18	Air vent screw	1
23	Pipe plug	1
25	Drain plug	1
38	O-ring, EPDM + FKM	1 + 1
38a	O-ring, EPDM + FKM	1 + 1

Plug, NEMA

Pos.	Description/ Kit No	*96511314*
18	Air vent screw	1
23	Pipe plug	1
23a	Pipe plug 1/4”	1
25	Drain plug	1
38	O-ring, EPDM + FKM	1 + 1
38a	O-ring, EPDM + FKM	1 + 1

Shaft seal

Pos.	Description	HQQE	HQQV
	Kit No	*96511844*	*96511845*
105	Shaft seal	1	1
-	Adjusting fork	1	1

Wear parts (silicon carbide bearings)

Pos.	Stages	-16	-21
	Description/ Kit No	*96524409*	*96524470*
4a	Chamber with bearing	2	2
4c	Chamber lower with bearing	1	1
26b	Screw	4	4
26c	Washer	4	4
45	Neck ring	15	19
47a	Bearing ring, rotating	3	3
49c	Impeller wear ring	-	-
61	Seal driver	1	1
62	Stop ring	1	1
64a	Spacing pipe	3	3
64c	Spacer lower	1	1
64d	Spacing pipe	2	2
65	Neck ring retainer	15	19
66	Lock washer	1	1
67	Lock nut	1	1

CRN 10 SF

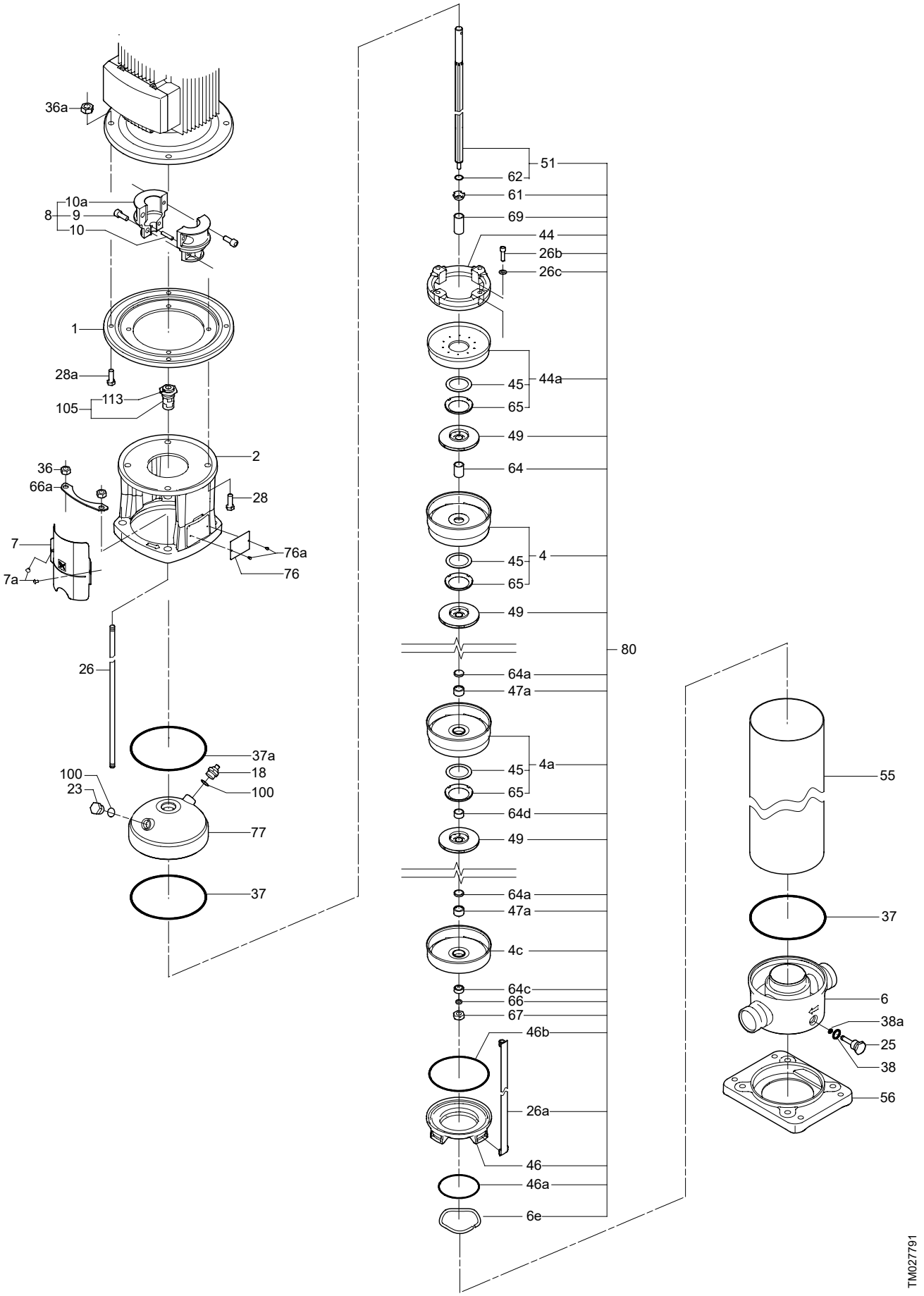
36a
10a
8
9
10
1
28a
105
113
2
36
66a
28
7
7a
76a
76
26
37a
100
23
18
100
77
37
51
62
61
69
44
26b
26c
45
44a
65
49
64
4
80
64a
47a
4a
64d
4c
64c
66
67
46b
26a
46
46a
6e
55
37
6
38a
25
38
56
TM027791

CRN 15, 20 SF

Chamber stack complete (silicon carbide bearings), CRN 15 SF

Pos.	Number of stages		Kit No
80	11	EPDM	*96524990*
		FKM	*96525360*
	16	EPDM	*96524991*
		FKM	*96525361*

Chamber stack complete (silicon carbide bearings), CRN 20 SF

Pos.	Number of stages		Kit No
80	9	EPDM	*96524992*
		FKM	*96525365*
	16	EPDM	*96524993*
		FKM	*96525366*

Coupling guard

Pos.	Kit No	*96509613*	*96509614*
	Description	MG 132 182TC - 215TC	MG 160 254TC - 284TSC
7	Coupling guard	2	2
7a	Screw	4	4

Coupling complete

Pos.		Description/ Kit No	*96511351*	*96511352*
		Motor/pump shaft diameter [mm]	38/16	42/16
8	9	Screw	4	4
	10	Pin	1	1
	10a	Coupling half	2	2

Coupling complete, NEMA

Pos.		Description/ Kit No	*96511356*
		Motor/pump shaft diameter [mm]	41.3/16
8	9	Screw	4
	10	Pin	1
	10a	Coupling half	2

O-ring, standard

Pos.	Description/ Kit No	EPDM	FKM
		96524520	*96524521*
37	O-ring	2	2
38	O-ring	1	1
38a	O-ring	1	1
46a	O-ring	1	1
46b	O-ring	1	1
100	O-ring	2	2

O-ring, double seal

Pos.	Description/ Kit No	EPDM	FKM
		96757608	*96757611*
37	O-ring	3	3
38	O-ring	-	-
38a	O-ring	1	1
46a	O-ring	1	1
46b	O-ring	1	1
100	O-ring	7	7

Plug

Pos.	Description/ Kit No	*96511312*
18	Air vent screw	1
23	Pipe plug	1
25	Drain plug	1
38	O-ring, EPDM + FKM	1 + 1
38a	O-ring, EPDM + FKM	1 + 1

Plug, NEMA

Pos.	Description/ Kit No	*96511314*
18	Air vent screw	1
23	Pipe plug	1
23a	Pipe plug 1/4”	1
25	Drain plug	1
38	O-ring, EPDM + FKM	1 + 1
38a	O-ring, EPDM + FKM	1 + 1

Shaft seal

Pos.	Kit No	*96511844*	*96511845*
	Description	HQQE	HQQV
105	Shaft seal	1	1
-	Adjusting fork	1	1

Wear parts (silicon carbide bearings), CRN 15 SF

Pos.	Description/ Kit No	*96524898*	*96524899*
	Stages	**-11**	**-16**
4a	Chamber with bearing	1	2
4c	Chamber lower with bearing	1	1
26b	Screw	4	4
26c	Washer	4	4
45	Neck ring	10	14
47a	Bearing ring, rotating	2	3
49c	Impeller wear ring	11	16
61	Seal driver	1	1
62	Stop ring	1	1
64a	Spacing pipe	2	3
64c	Spacer lower	1	2
64d	Spacing pipe	1	2
65	Neck ring retainer	10	14
66	Lock washer	1	1
67	Lock nut	1	1

Wear parts (silicon carbide bearings), CRN 20 SF

Pos.	Description/ Kit No	*96524897*	*96524899*
	Stages	**-9**	**-16**
4a	Chamber with bearing	1	2
4c	Chamber lower with bearing	1	1
26b	Screw	4	4
26c	Washer	4	4
45	Neck ring	8	15
47a	Bearing ring, rotating	2	3
49c	Impeller wear ring	9	16
61	Seal driver	1	1
62	Stop ring	1	1
64a	Spacing pipe	3	3
64c	Spacer lower	1	2
64d	Spacing pipe	1	2
65	Neck ring retainer	8	15
66	Lock washer	1	1
67	Lock nut	1	1

CRN 15, 20 SF

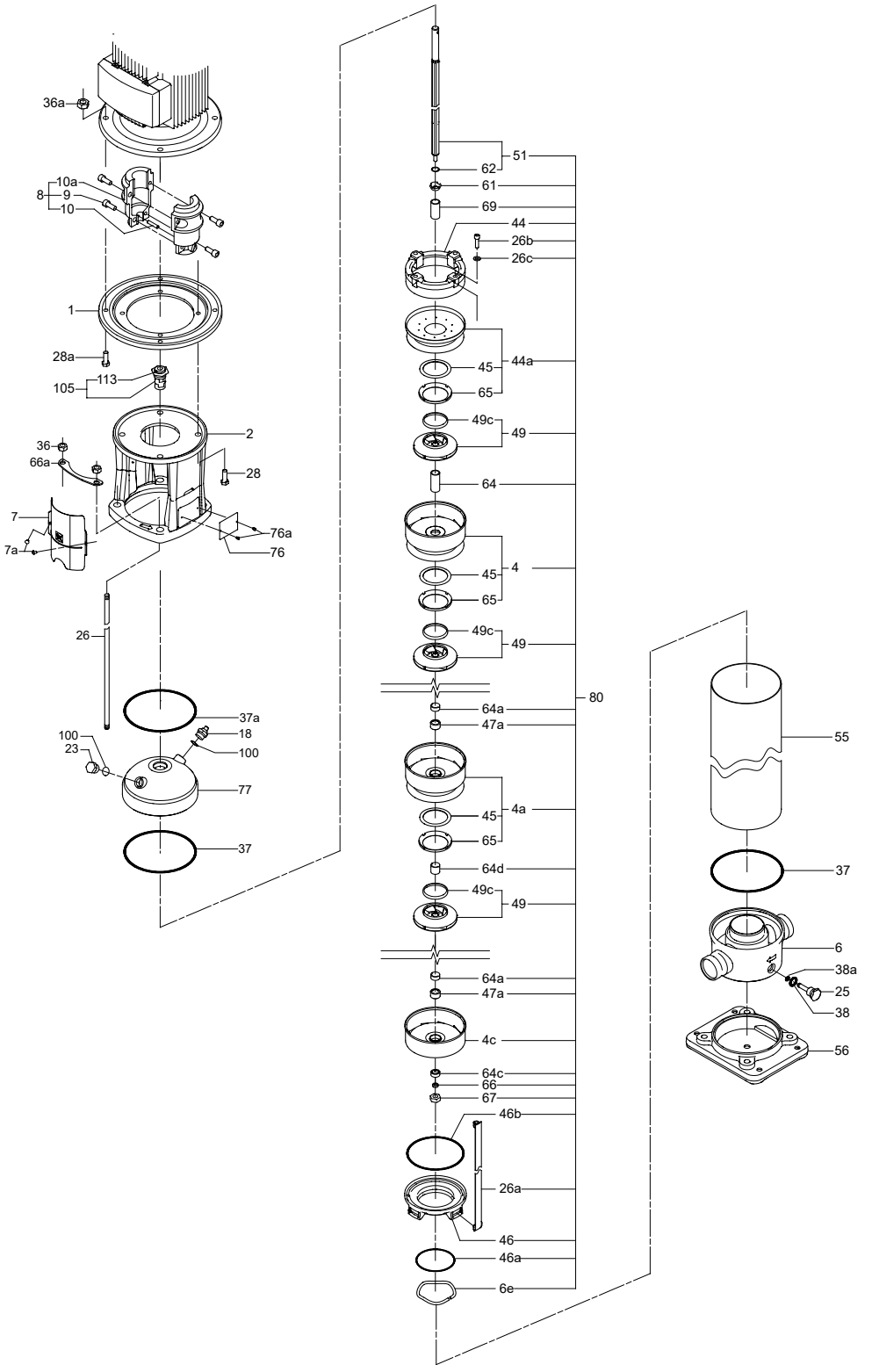

TM027792

CRN 16 SF

50/60 Hz, model B

Chamber stack complete

Consists of items: 4, 4a, 4b, 47a, 49, 51, 61, 64, 64a, 64c, 64d, 66, 67, 69, 69a, 140	Kit No
Number of stages	
10 (9 impellers)	*335127*
16 (15 impellers)	*335266*

Coupling complete

Pos.			NEMA
	Kit No	*339142*	*425263*
	Motor/pump shaft diameter [mm]	**42/16**	**41.3/16**
	Description		
10a	Coupling half	2	2
9	Screw	4	4
10	Pin	1	1

Shaft seal

Pos.	Kit No	*425084*	*425085*
	Description	**AUUE/V**	**AUUE/V**
37	Vulcanised sleeve gasket	-	2
105	Shaft seal	1	1

Wear parts

Pos.	Kit No	*335088*	*335089*
	Number of stages	**10**	**16**
	Description	**9 impellers**	**15 impellers**
4a	Bearing chamber	1	2
4b	Bearing chamber	1	1
37	Sleeve gasket	2	2
38	Drain plug gasket *	1	1
45	Neck ring	7	12
47a	Bearing ring	2	3
49c	Impeller wear ring	9	15
61	Spacer for shaft seal	1	1
62	Stop ring	1	1
64c	Spacer	1	1
65	Neck ring retainer	7	12
66	Spring washer	1	1
67	Lock nut	1	1
78	O-ring	1	1
98	O-ring	1	1
100	O-ring for air vent screw *	1	1

* EPDM and FKM

CRN 16 SF

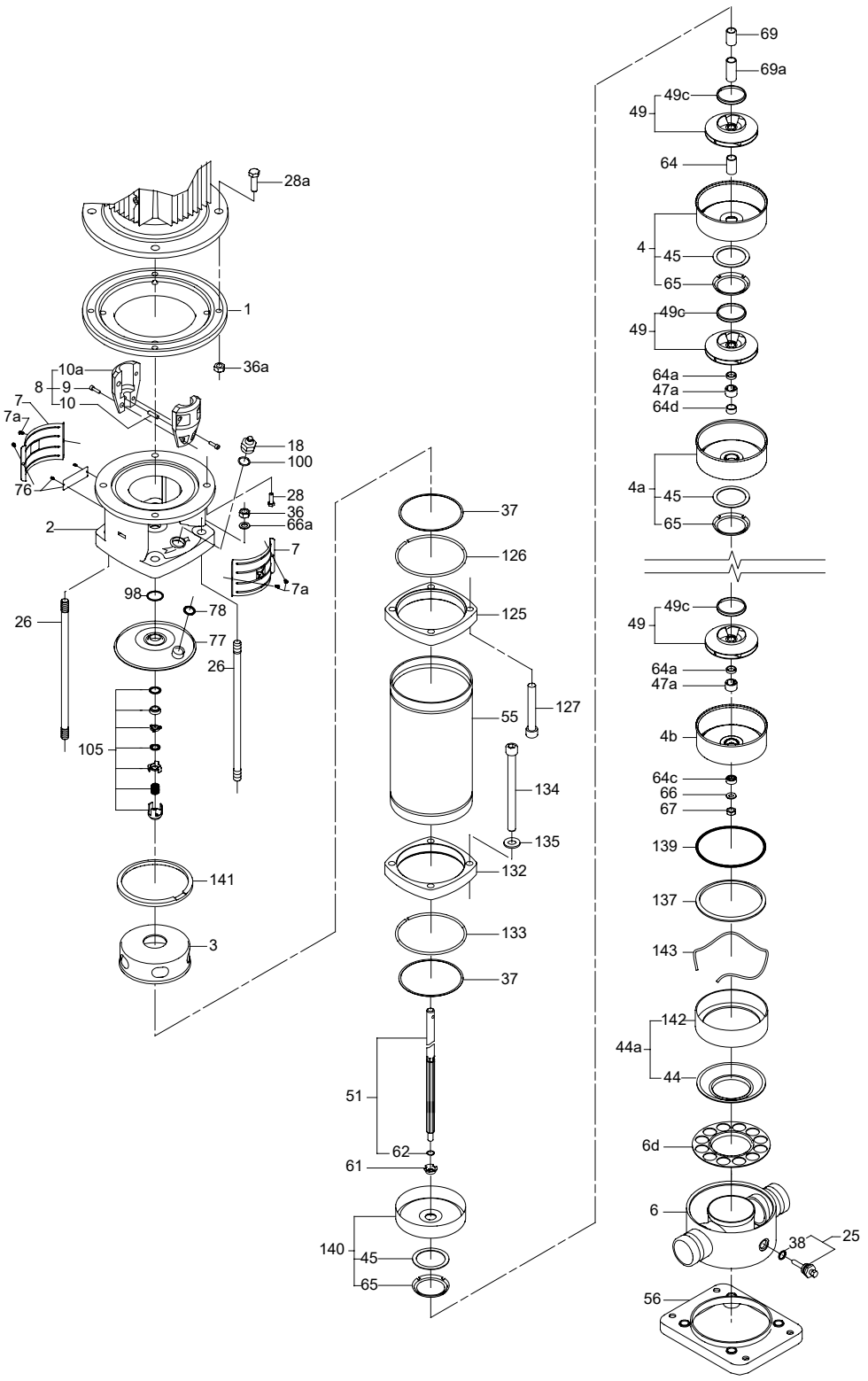
28a
1
36a
10a
8
9
10
7
7a
18
100
28
36
66a
2
7
7a
76
98
78
26
77
26
105
141
3
37
126
125
55
127
134
135
132
133
37
51
62
61
140
45
65
69
69a
49c
49
64
4
45
65
49c
49
64a
47a
64d
4a
45
65
49c
49
64a
47a
4b
64c
66
67
139
137
143
142
44a
44
6d
6
38
25
56
TM002981

CR, CRN 90 SF

50/60 Hz, model B

Impeller 1. stage

Type	*Standard*	Reduced
Standard	*98593752*	*98593755*
Teflon	*98593759*	*98593761*
Electro pol.	*98593764*	*98593769*

Content

	Description	Quantity
	Impeller	1
	Suction interconnector	1
	Nut for hub with spring	1

CRN 90 SF

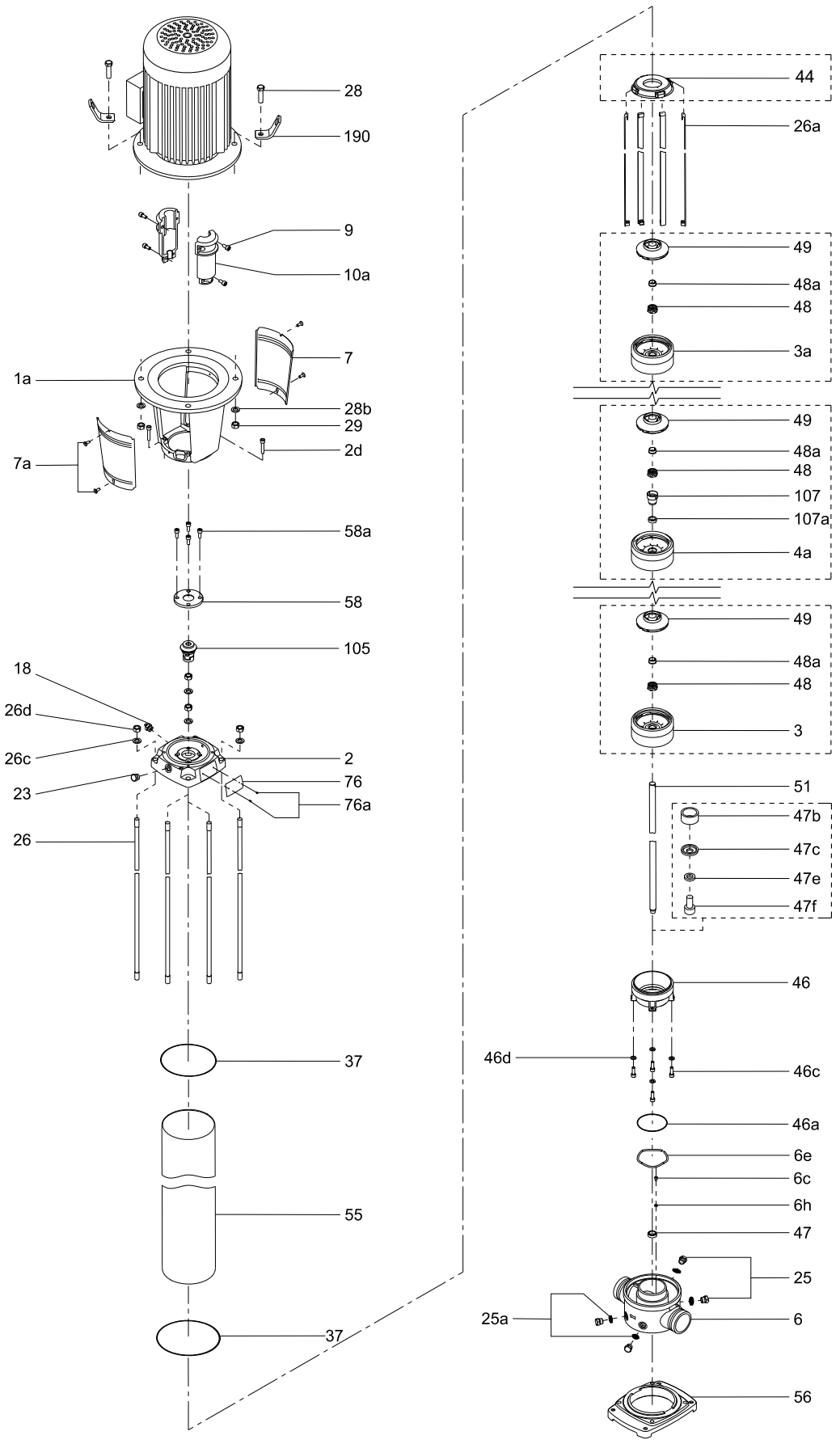
28
190
9
10a
7
1a
28b
29
2d
7a
58a
58
105
18
26d
26c
23
26
2
76
76a
37
55
37
44
26a
49
48a
48
3a
49
48a
48
107
107a
4a
49
48a
48
3
51
47b
47c
47e
47f
46
46d
46c
46a
6e
6c
6h
47
25
25a
6
56
TM055812

21. CR Tandem

CR, CRI, CRN 1, 3, 5

50/60 Hz

O-ring

Pos.	Description/ kit No	FFKM	FXM
		96533328	*96463944*
37a	O-ring	2	2
38	O-ring	1	1
100	O-ring	2	2
109a	O-ring	1	-
	O-ring	-	1

Sealing

Rubber type	Kit No
EPDM	*96533362*
FKM	*96533363*
FFKM	*96533364*

Content

Pos.	Description	Quantity
37a	O-ring	2
37b	O-ring	1
38	O-ring	1
100	O-ring	2
100a	O-ring	4
109a	O-ring	1

Shaft seal

Type	Kit No
HUBK	*96533322*
HUBF	*96533323*
HUUK	*96533324*
HUUF	*96533325*
HQQK	*96533326*
HQQF	*96533327*
HQBK	*96491375*

Content

Pos.	Description	Quantity
105	Shaft seal	1

Shaft seal

Pos.	Description	OQQV
	Kit No	*96989183*
105b	Shaft seal	1
112a	Driver	1
113	Set screw	2

CR, CRI, CRN 1, 3, 5, Tandem

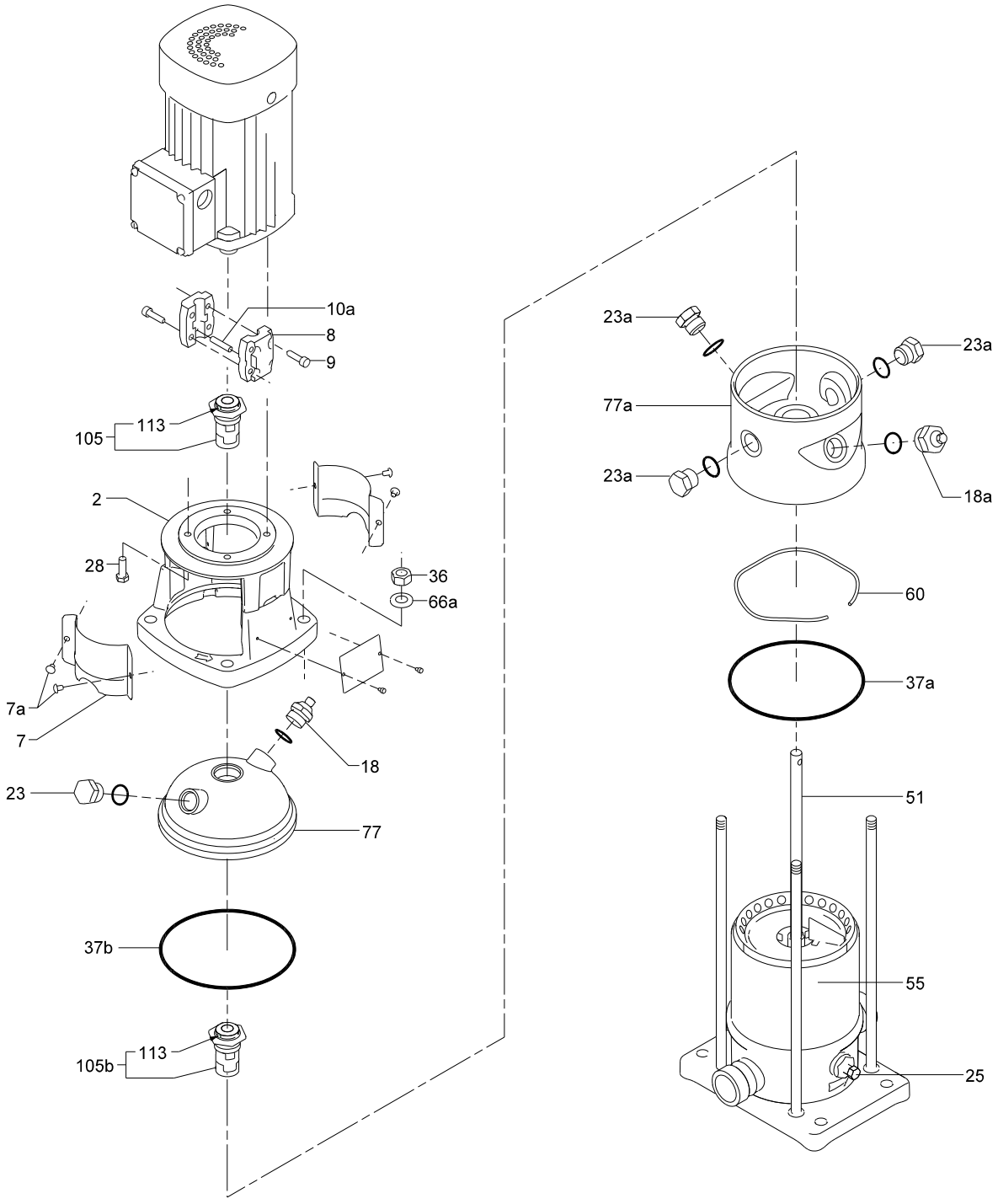

CR, CRI, CRN 10, 15, 20

O-ring

Pos.	Description	FFKM	FXM
	Kit No	*96533374*	*96534871*
37a	O-ring	2	2
38	O-ring	1	1
38a	O-ring	1	1
100	O-ring	2	2

O-ring, EPDM

Pos.	Description		Kit No	*96525433*
37a	O-ring		EPDM	2
37b	O-ring		EPDM	1
38	O-ring		EPDM	1
38a	O-ring		EPDM	1
39	Gasket	oval flange CR 10	KLINGERsil C-4430	2
		FGJ flange CR 10		2
		FGJ flange CR 15, 20		2
60	Rubber spring		EPDM	4
100	O-ring		EPDM	2
100a	O-ring		EPDM	2
100b	O-ring		EPDM	2

O-ring, FKM

Pos.	Description		Kit No	*96525434*
37a	O-ring		FKM	2
37b	O-ring		FKM	1
38	O-ring		FKM	1
38a	O-ring		FKM	1
39	Gasket	oval flange CR 10	KLINGERsil C-4430	2
		FGJ flange CR 10		2
		FGJ flange CR 15, 20		2
60	Rubber spring		FKM	4
100	O-ring		FKM	2
100a	O-ring		FXM	2
100b	O-ring		FKM	2

O-ring, FFKM/EPDM

Pos.	Description		Kit No	*96525436*
37a	O-ring		FFKM	2
37b	O-ring		EPDM	1
38	O-ring		FFKM	1
38a	O-ring		FFKM	1
39	Gasket	oval flange CR 10	KLINGERsil C-4430	2
		FGJ flange CR 10		2
		FGJ flange CR 15, 20		2
60	Rubber spring		PTFE	4
100	O-ring		EPDM	1
100a	O-ring		FFKM	2
100b	O-ring		EPDM	2

O-ring, FFKM/FKM

Pos.	Description		Kit No	*96525436*
37a	O-ring		FFKM	2
37b	O-ring		FKM	1
38	O-ring		FFKM	1
38a	O-ring		FFKM	1
39	Gasket	oval flange CR 10	KLINGERsil C-4430	2
		FGJ flange CR 10		2
		FGJ flange CR 15, 20		2
60	Rubber spring		PTFE	4
100	O-ring		FKM	1
100a	O-ring		FFKM	2
100b	O-ring		FKM	2

Shaft seal

Type	Kit No
HQQE	*96511844*
HQQV	*96511845*
HQQK	*96511846*
HQQF	*96511847*
HUBK	*96511838*
HUUV	*96511841*
HUUK	*96511842*
HUUF	*96511843*

Content

Pos.	Description	Quantity
105	Shaft seal	1
-	Adjusting fork	1

CR, CRI, CRN 10, 15, 20, Tandem

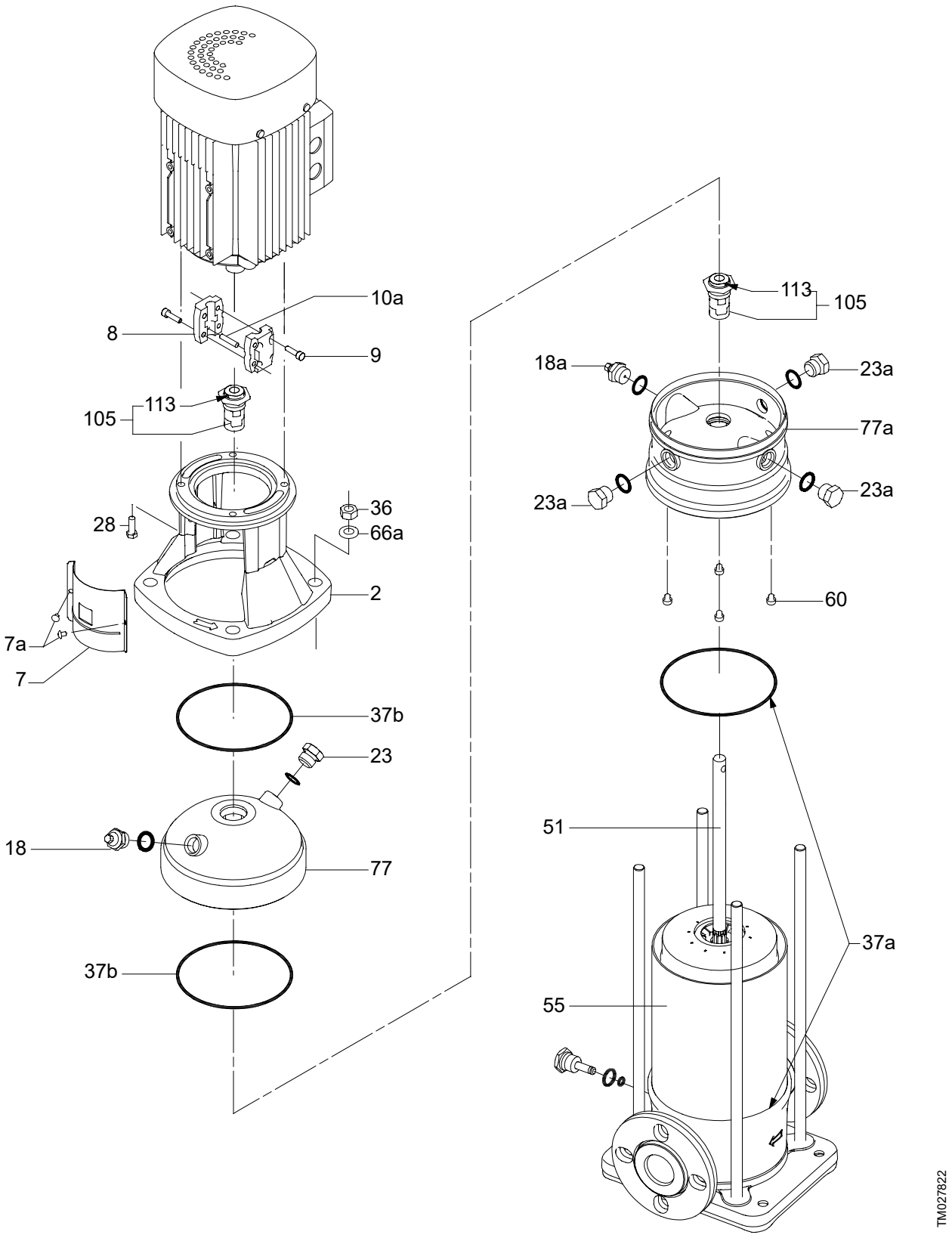

CR, CRI, CRN 32, 45, 64, 90

Shaft seal

Pos.		Description/ Kit No	*96578599*
105	102	O-ring EPDM	1
		O-ring FKM	1
	103	Seal ring, upper	1
	104	Seal ring rotating	1
	106	Spring retainer	1
	107	O-ring EPDM	1
		O-ring FKM	1
	108	Compression spring	1
	109a	O-ring EPDM	1
		O-ring FKM	1
	110b	O-ring EPDM	1
		O-ring FKM	1
	111	Upper driver	1
	112	Seal driver	1
	112a	Driving ring	1
	113	Socket set screw	1
	-	Adjusting fork	1

CR, CRI, CRN 32, 45, 64, 90 Tandem

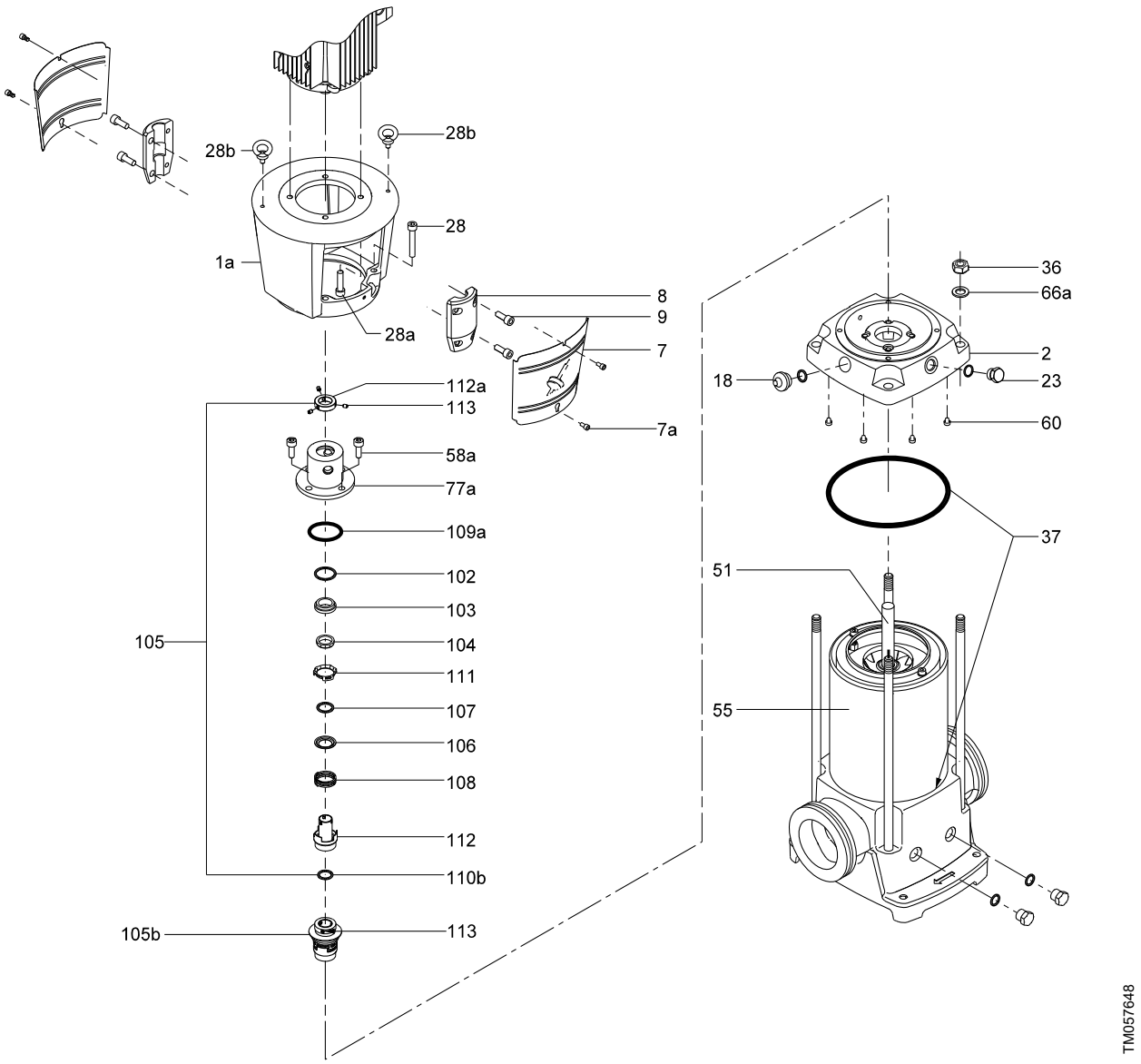

CR, CRI, CRN 32, 45, 64, 90, model B

O-ring, CR(N) 32

Pos.	Kit No		98593542	98593544	98593547	98593549
	Description	**Rubber**	**EPDM**	**FKM**	**FXM**	**FFKM**
	O-ring	EPDM	2			
		FKM		2		
		FXM			2	
		FFKM				2
	O-ring	EPDM	1			
		FKM		1		
		FXM			1	1
	O-ring	EPDM	2			
		FKM		2		
		FXM			2	
		FFKM				2
	O-ring	EPDM	2			
		FKM		2		
		FXM			2	
		FFKM				2
	O-ring	EPDM	2			
		FKM		2		
		FXM			2	2
		FFKM				
	O-ring	EPDM	4			
		FKM		4		
		FXM			4	
		FFKM				4
	Spring	PTFE	4	4	4	4
	Adjusting fork		2	2	2	2

O-ring, CR(N) 45, 64

Pos.	Kit No		98593566	98593568	98593592	98593593
	Description	Rubber	EPDM	FKM	FXM	FFKM
	O-ring	EPDM	2			
		FKM		2		
		FXM			2	
		FFKM				2
	O-ring	EPDM	1			
		FKM		1		
		FXM			1	1
	O-ring	EPDM	2			
		FKM		2		
		FXM			2	
		FFKM				2
	O-ring	EPDM	2			
		FKM		2		
		FXM			2	
		FFKM				2
	O-ring	EPDM	2			
		FKM		2		
		FXM			2	2
		FFKM				
	O-ring	EPDM	4			
		FKM		4		
		FXM			4	
		FFKM				4
	Spring	PTFE	4	4	4	4
	Adjusting fork		2	2	2	2

O-ring, CR(N) 90

Pos.	Kit No		98593611	98593612	98593615	98593616
	Description	Rubber	EPDM	FKM	FXM	FFKM
	O-ring	EPDM	2			
		FKM		2		
		FXM			2	
		FFKM				2
	O-ring	EPDM	1			
		FKM		1		
		FXM			1	1
	O-ring	EPDM	2			
		FKM		2		
		FXM			2	
		FFKM				2
	O-ring	EPDM	2			
		FKM		2		
		FXM			2	
		FFKM				2
	O-ring	EPDM	2			
		FKM		2		
		FXM			2	2
		FFKM				
	O-ring	EPDM	4			
		FKM		4		
		FXM			4	
		FFKM				4
	Spring	PTFE	4	4	4	4
	Adjusting fork		2	2	2	2

Plug

Pos.	Description/ Kit No	98593644
	Plug	2
	Air vent screw	1
	Plug	1
	O-ring	4
	O-ring	4
	O-ring	4

Cover

Pos.	Description/ Kit No	98593648
	Cover N	1
	Cap Screw	4

22. CRK, CRKI

CRK, CRKI 2

50/60 Hz, Models A, B, C

Coupling complete

Pos.	Kit No	415078	415079	415062	415063	415314	415315
	Motor/pump shaft diameter [mm] x L	14/12 x 81	19/12 x 81	24/12 x 68	28/12 x 68	15.8/12	28.5/12
	Description					NEMA	
10a	Coupling half	2	2	2	2	2	2
9	Screw	4	4	4	4	4	4
10	Pin	1	1	1	1	1	1

Metal terminal box

Pos.	Models	All
	Kit No	405179
	Description	
164a	Terminal box with gasket	1
164	Terminal box cover with gasket	1
166	Screw	4
175	Screw	4
176	Terminal complete	1

Rectangular flange

Pos.	Kit No	405178
	Description	
12	Counter flange	1
39	O-ring	1
35	Screw	4

Shaft seal

Pos.	Kit No	415080	415085	985720
	Description	AUUV	BUBV	AUUK
37	Gasket	1	1	1
37a	Gasket	1	1	1
105	Shaft seal complete	1	1	1

Wear parts

Pos.	Kit No						
		No O-ring	*405133*				
		EPDM		*405134*	*405135*		
		EPDM				*98311415*	*98331662*
		FKM				*98311420*	*98331664*
	Number of stages		**2-9**	**13-18**	**22-26**	**2-18**	**2-26**
4a	Bearing chamber		1	2	3	2	3
9	Coupling screw		4	4	4	4	4
10	Coupling pin		1	1	1	1	1
36	Nut		4	4	4	4	4
37	Gasket		1	-	-	-	-
	O-ring		-	1	1	1	1
37a	Gasket		1	1	1	-	-
	O-ring		-	-	-	1	1
45	Neck ring		8	16	23	16	23
47a	Bearing ring		1	2	3	2	3
61	Spacer		1	1	1	1	1
62	Stop ring		1	1	1	1	1
64b	Spacing pipe		1	1	1	1	1
65	Neck ring retainer		8	16	23	16	23
66	Washer		1	1	1	1	1
66a	Washer		4	4	4	4	4
67	Lock nut		1	1	1	1	1
122	Priming screw		1	1	1	1	1

CRK, CRKI 2

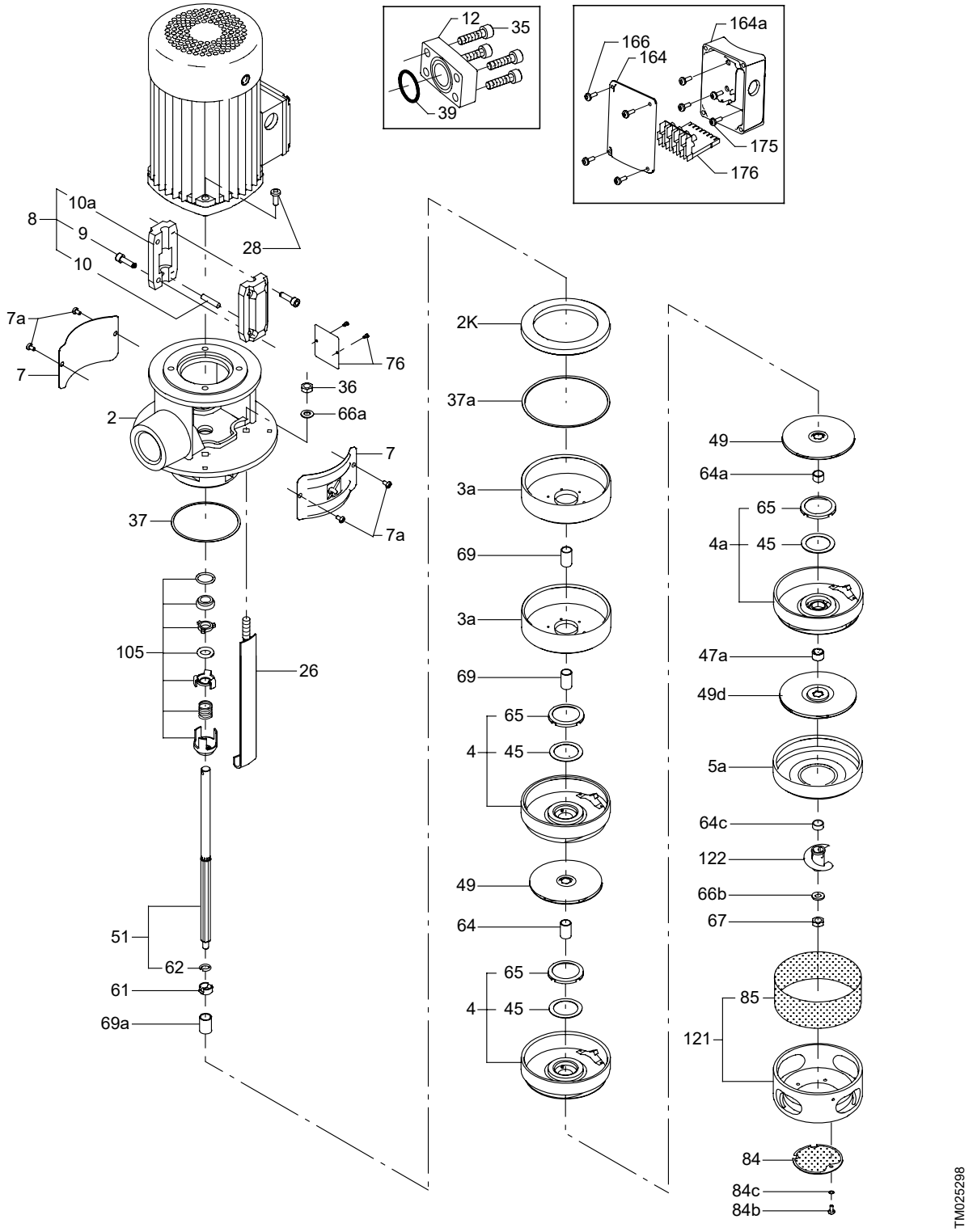
12
35
39
166
164
164a
175
176
10a
8
9
10
28
7a
7
76
36
66a
2
7
7a
37
105
26
51
62
61
69a
2K
37a
3a
69
3a
69
65
4
45
49
64
65
4
45
49
64a
65
4a
45
47a
49d
5a
64c
122
66b
67
85
121
84
84c
84b
TM025298

CRK, CRKI 4

Coupling complete

Pos.	Kit No	415078	415079	415062	415063	415314	415315
	Motor/pump shaft diameter [mm] x L	14/12 x 81	19/12 x 81	24/12 x 68	28/12 x 68	15.8/12	28.5/12
	Description					NEMA	
10a	Coupling half	2	2	2	2	2	2
9	Screw	4	4	4	4	4	4
10	Pin	1	1	1	1	1	1

Metal terminal box

Pos.	Models	All
	Kit No	405179
	Description	
164a	Terminal box with gasket	1
164	Terminal box cover with gasket	1
166	Screw	4
175	Screw	4
176	Terminal complete	1

Rectangular flange

Pos.	Kit No	405178
	Description	
12	Counter flange	1
39	O-ring	1
35	Screw	4

Shaft seal

Pos.	Kit No	415080	415085	985720
	Description	AUUV	BUBV	AUUK
37	Gasket	1	1	1
37a	Gasket	1	1	1
105	Shaft seal complete	1	1	1

Wear parts

Pos.	Kit No	no o-ring	415092						
		EPDM		415093	415114	415094			
		EPDM					98311416	98311417	98311419
		FKM					98311432	98311435	98311436
	Number of stages		1-6	7-12	14-16	18-22	4-12	4-16	4-22
	Description								
4a	Bearing chamber		1	2	3	4	2	3	4
9	Coupling screw		4	4	4	4	4	4	4
10	Coupling pin		1	1	1	1	1	1	1
36	Nut		4	4	4	4	4	4	4
37	Gasket		1	-	-	-	-	-	-
	O-ring		-	1	1	1	1	1	1
37a	Gasket		1	1	1	1	-	-	-
	O-ring		-	-	-	-	1	1	1
45	Neck ring		5	10	13	18	10	13	18
47a	Bearing ring		1	2	4	4	2	4	4
61	Spacer		1	1	1	1	1	1	1
62	Stop ring		1	1	1	1	1	1	1
65	Neck ring retainer		5	10	13	18	10	13	18
66	Washer		1	1	1	1	1	1	1
66a	Washer		4	4	4	4	4	4	4
67	Lock nut		1	1	1	1	1	1	1
122	Priming screw		1	1	1	1	1	1	1

CRK, CRKI 4

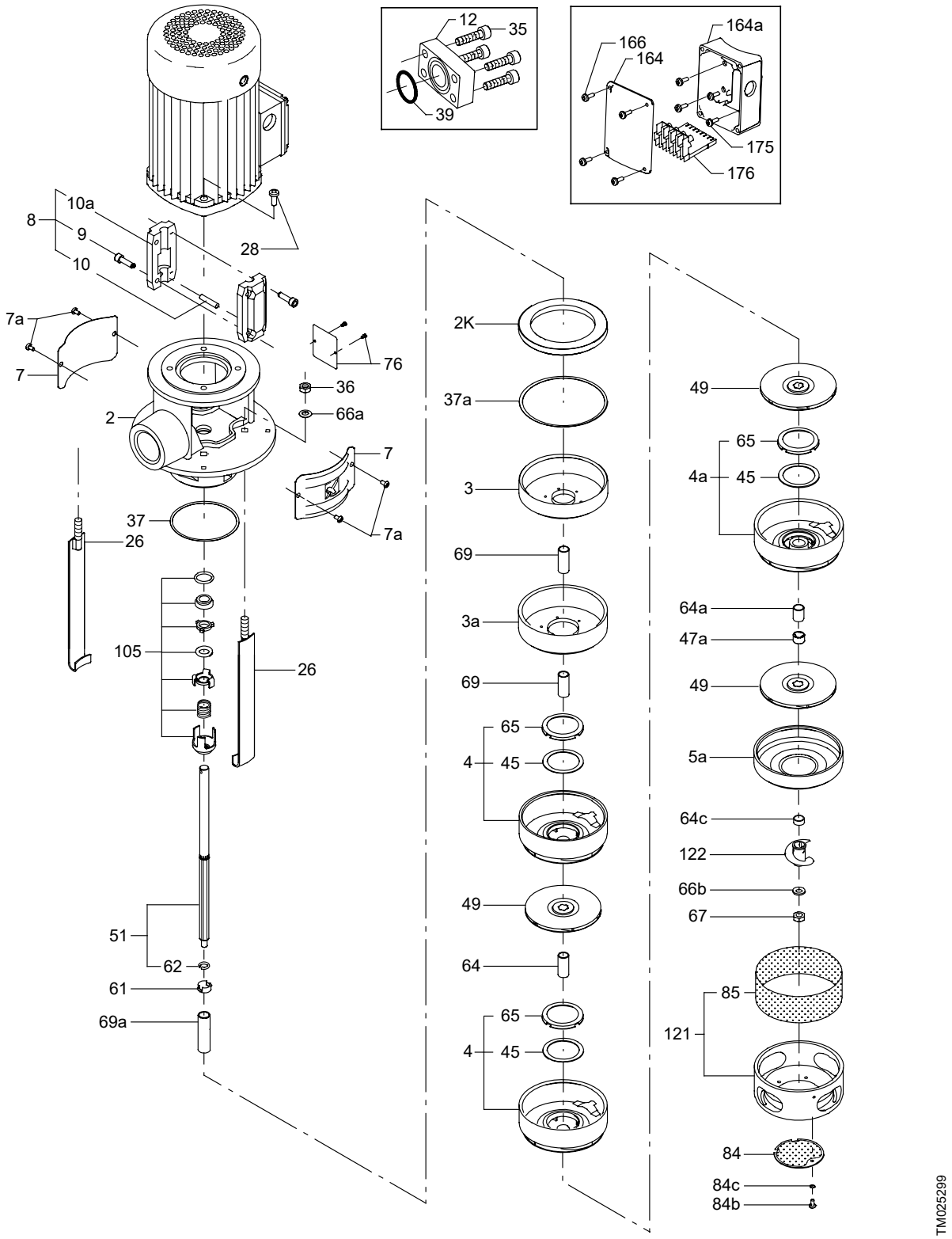

TM025299

CRK 8
50/60 Hz, Model B

Coupling complete

Pos.	Kit No	339119	339169	339124	339128	339138	339142	425260	425261	425262	425263
	Motor/pump shaft diameter [mm] x L	**19/16 x 51**	**19/16 x 82**	**24/16 x 68**	**28/16 x 68**	**38/16 x 90**	**42/16x 105**	**15.9/16**	**28.6/16**	**34.9/16**	**41.3/16**
	Description							**NEMA**	**NEMA**	**NEMA**	**NEMA**
10a	Coupling half	2	2	2	2	2	2	2	2	2	2
9	Screw	4	4	4	4	4	4	4	4	4	4
10	Pin	1	1	1	1	1	1	1	1	1	1

Metal terminal box

Pos.	All with MG 71/80	
	Kit No	405179
	Description	
164a	Terminal box with gasket	1
164	Terminal box cover with gasket	1
166	Screw	4
175	Screw	4
176	Terminal complete	1

Shaft seal

Pos.	Kit No	425089
	Description	**AUUV**
37	Gasket	1
105	Shaft seal complete	1

Wear parts

Pos.		CRK 8-20/30/40/50/60/80	CRK 8-100/120/140	CRK 8-160/180/200
	Kit No	425090	425091	425092
	Number of stages	**1-8**	**1-14**	**1-20**
	Description			
4a	Chamber with bearing	1	2	3
36	Nut M12	4	4	4
36a	Nut M16	-	4	4
37	Gasket ∅145/138 x 0.25	1	1	1
45	Neck ring	7	12	17
47a	Bearing ring	1	2	3
61	Spacer for shaft seal	1	1	1
62	Stop ring	1	1	1
64c	Spacer 21.5 x 17.5 x 8	1	1	1
65	Neck ring retainer	7	12	17
66	Lock washer M12	1	1	1
66a	Washer ∅13/∅24	4	4	4
66b	Spacing pipe 11 mm	1	1	1

CRK 8

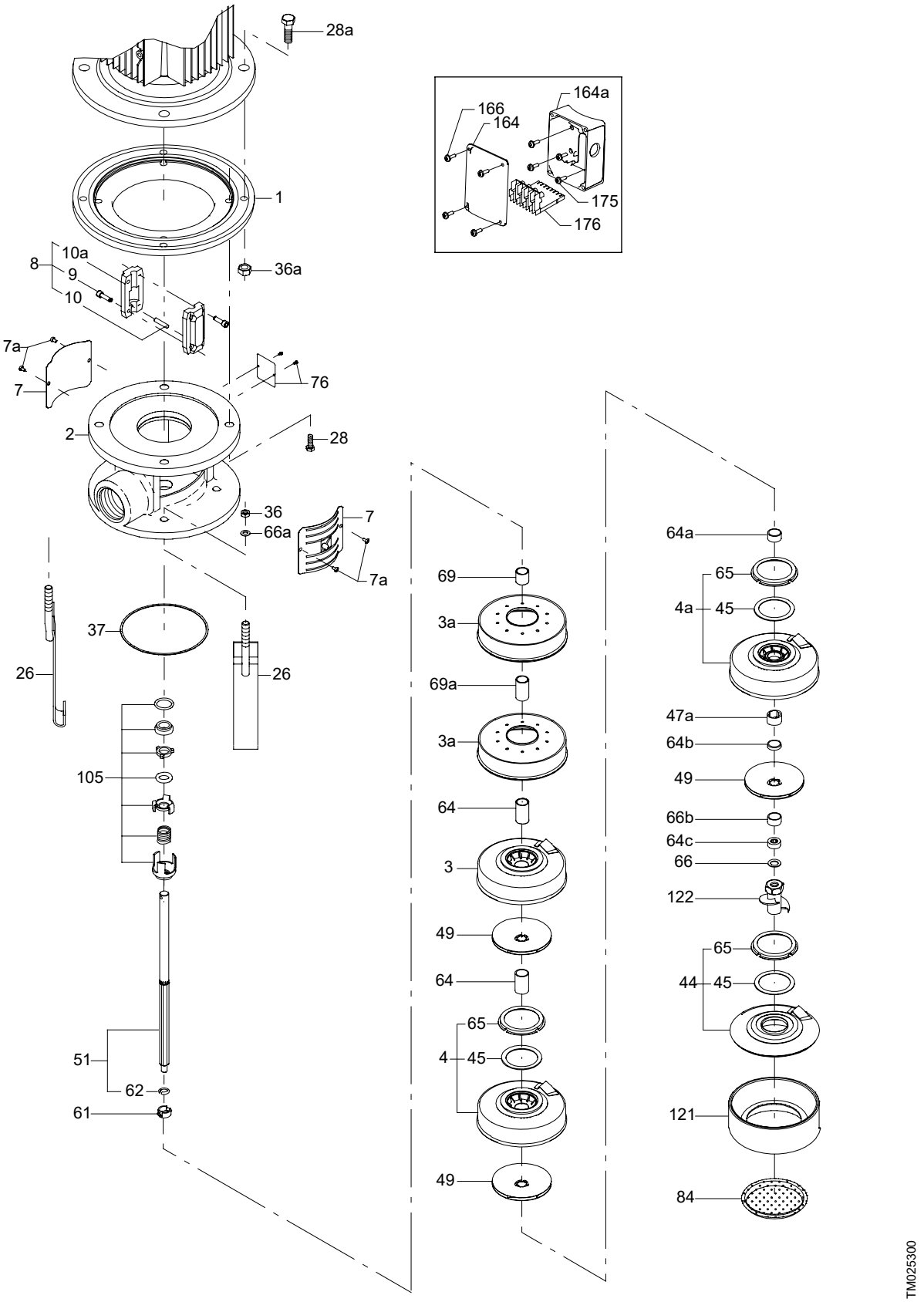
28a
1
10a
8
9
10
36a
7a
7
76
2
28
36
66a
7
7a
37
26
26
105
51
62
61
164a
166
164
175
176
69
3a
69a
3a
64
3
49
64
65
4
45
49
64a
65
4a
45
47a
64b
49
66b
64c
66
122
65
44
45
121
84
TM025300

CRK 16

Coupling complete

Pos.	Kit No	339119	339169	339124	339128	339138	339142	425261	425262	425263
	Motor/pump shaft diameter [mm] x L	**19/16 x 51**	**19/16 x 82**	**24/16 x 68**	**28/16 x 68**	**38/16 x 90**	**42/16 x 105**	**28.6/16**	**34.9/16**	**41.3/16**
	Description							**NEMA**	**NEMA**	**NEMA**
10a	Coupling half	2	2	2	2	2	2	2	2	2
9	Screw	4	4	4	4	4	4	4	4	4
10	Pin	1	1	1	1	1	1	1	1	1

Metal terminal box

Pos.	All with MG 71/80	
	Kit No	405179
	Description	
164a	Terminal box with gasket	1
164	Terminal box cover with gasket	1
166	Screw	4
175	Screw	4
176	Terminal complete	1

Shaft seal

Pos.	Kit No	425089
	Description	**AUUV**
37	Gasket	1
105	Shaft seal complete	1

Wear parts

Pos.		CRK 16-20/30/40/50/60	CRK 16-70/80/100	CRK 16-120/140/160
	Kit No	335091	335092	335093
	Number of stages	**1-6**	**7-10**	**12-16**
	Description			
4a	Chamber with bearing	1	2	3
36	Nut M12	4	4	4
36a	Nut M16	-	4	4
37	Gasket ∅145/138 x 0.25	1	1	1
45	Neck ring	5	8	13
47a	Bearing ring	1	2	3
61	Spacer for shaft seal	1	1	1
62	Stop ring	1	1	1
64c	Spacer 21.5 x 17.5 x 8	1	1	1
65	Neck ring retainer	5	8	13
66	Lock washer M12	1	1	1
66a	Washer∅13/∅24	4	4	4
66b	Spacing pipe11 mm	1	1	1

CRK 16

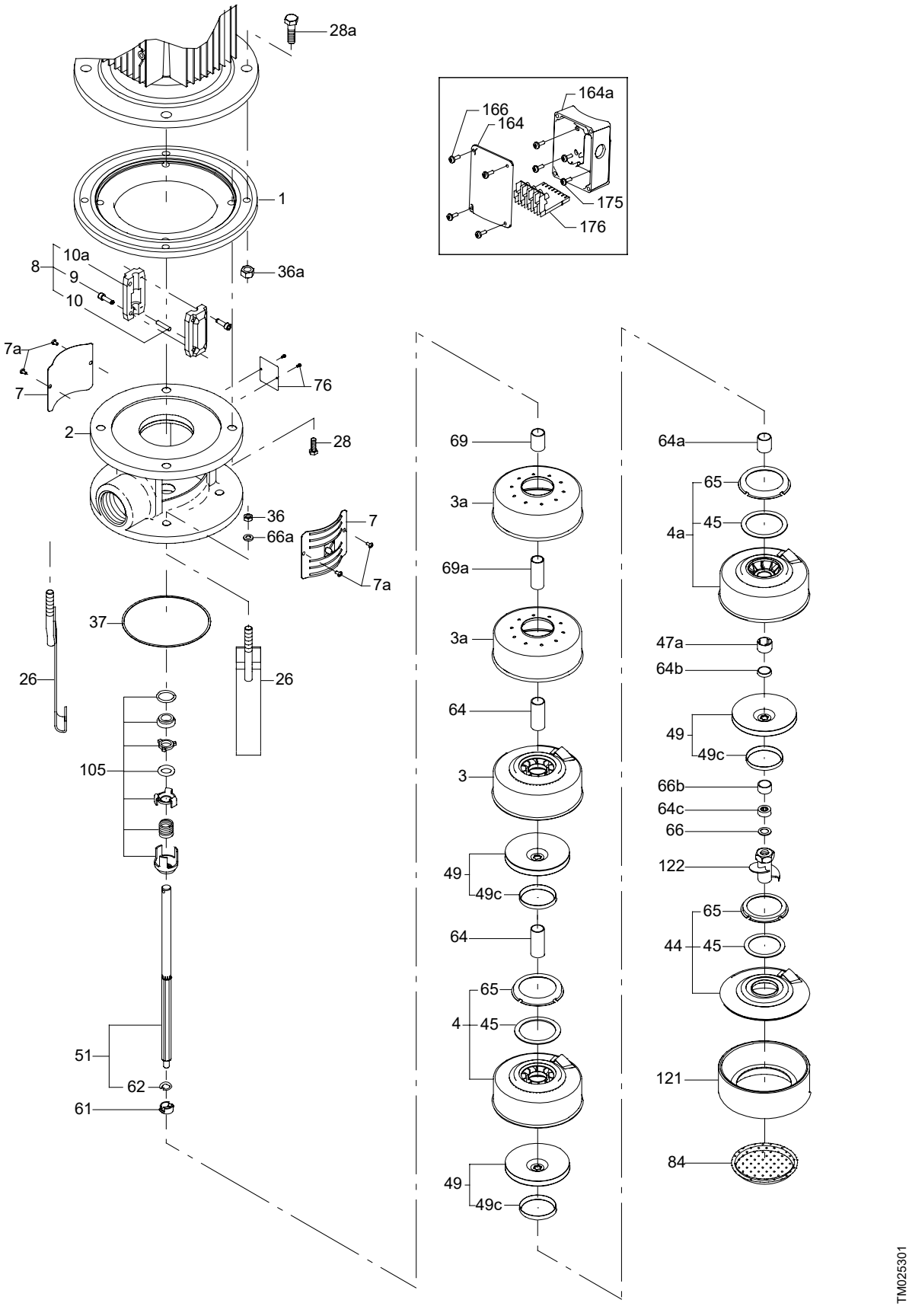
28a
1
10a
8
9
10
36a
7a
7
76
2
28
36
66a
7
7a
37
26
26
105
51
62
61
164a
166
164
175
176
69
3a
69a
3a
64
3
49
49c
64
65
4
45
64a
65
4a
45
47a
64b
49
49c
66b
64c
66
122
65
44
45
121
84
TM025301

CRK 30

50/60 Hz, Model A

Coupling complete

Pos.	Kit No	345107	345108	345109	345110	345231	485140	485160	345232
	Motor/pump shaft diameter [mm] x L	**28/22 x 88**	**38/22 x 116**	**42/22 x 116**	**48/22 x 116**	**28.6/22 x 116**	**34.9/22 x 116**	**41.3/22 x 116**	**41.3/22 x 116**
	Description					**NEMA**	**NEMA**	**NEMA**	**NEMA**
	Coupling half	2	2	2	2	2	2	2	2
9	Screw	4	4	4	4	4	4	4	4
10	Pin	1	1	1	1	1	1	1	1

Metal terminal box

Pos.	All with MG 71/80	
	Kit No	405179
	Description	
164a	Terminal box with gasket	1
164	Terminal box cover with gasket	1
166	Screw	4
175	Screw	4
176	Terminal complete	1

Shaft seal

Pos.	Kit No	345294
	Description	
105	Shaft seal complete	1
109	O-ring	1

Wear parts

Pos.		50/60 Hz	50/60 Hz	50/60 Hz	50 Hz
		CRK 30-20-30/1-3	**CRK 30-40-110/2-11**	**CRK 30-120-160/7-10**	**CRK 30-120-160/11-16**
		CRK 30-40-160/1	**CRK 30-120-160/2-6**		
	Kit No	345290	345291	345292	345293
	Number of stages	**1-3**	**2-11**	**7-10**	**11-16**
	Description				
4a	Bearing chamber	1	2	3	3
36	Nut	4	4	4	4
37	Gasket	1	1	1	1
45	Neck ring	3	11	10	16
47a	Bearing ring	1	2	3	3
49c	Impeller wear ring	3	11	10	16
66a	Washer	4	4	4	4
67	Lock nut	1	1	1	1

CRK 30

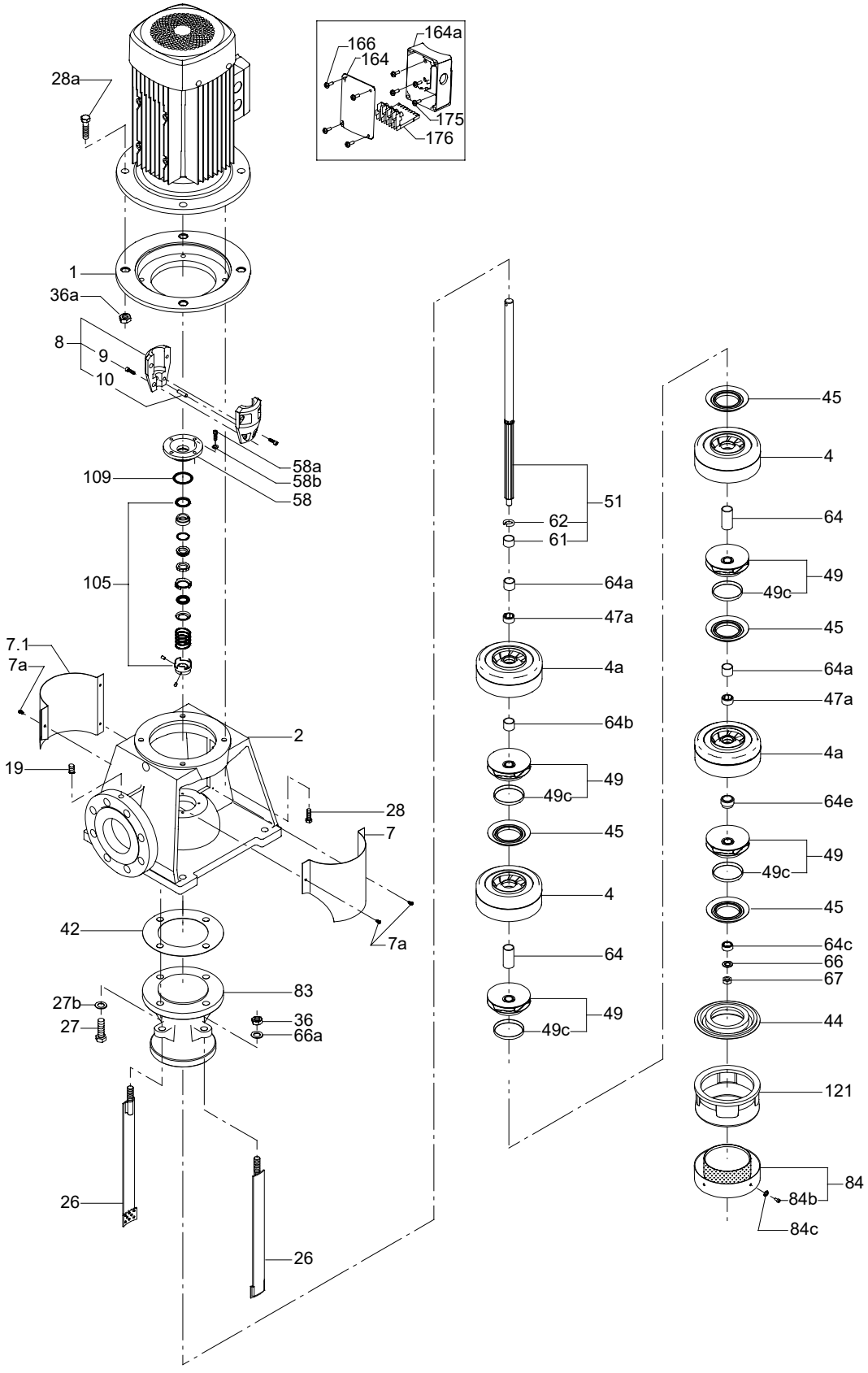

TM025302

CRK 60

Coupling complete

Pos.	Kit No	345107	345108	345109	345110	345231	485140	485160	345232
	Motor/pump shaft diameter [mm] x L	28/22 x 88	38/22 x 116	42/22 x 116	48/22 x 116	28.6/22 x 116	34.9/22 x 116	41.3/22 x 116	41.3/22 x 116
	Description					NEMA	NEMA	NEMA	NEMA
	Coupling half	2	2	2	2	2	2	2	2
9	Screw	4	4	4	4	4	4	4	4
10	Pin	1	1	1	1	1	1	1	1

Metal terminal box

Pos.	All with MG 71/80	
	Kit No	405179
	Description	
164a	Terminal box with gasket	1
164	Terminal box cover with gasket	1
166	Screw	4
175	Screw	4
176	Terminal complete	1

Shaft seal

Pos.	Kit No	345294
	Description	
105	Shaft seal complete	1
109	O-ring	1

Wear parts

Pos.		CRK 60-20-30/1-3	CRK 60-40-100/2-8
		CRK 60-40-100/1	
	Kit No	365196	365197
	Number of stages	1-3	2-8
	Description		
4a	Bearing chamber	1	2
36	Nut	4	4
37	Gasket	1	1
45	Neck ring	3	8
47a	Bearing ring	1	2
66a	Washer	4	4

CRK 60

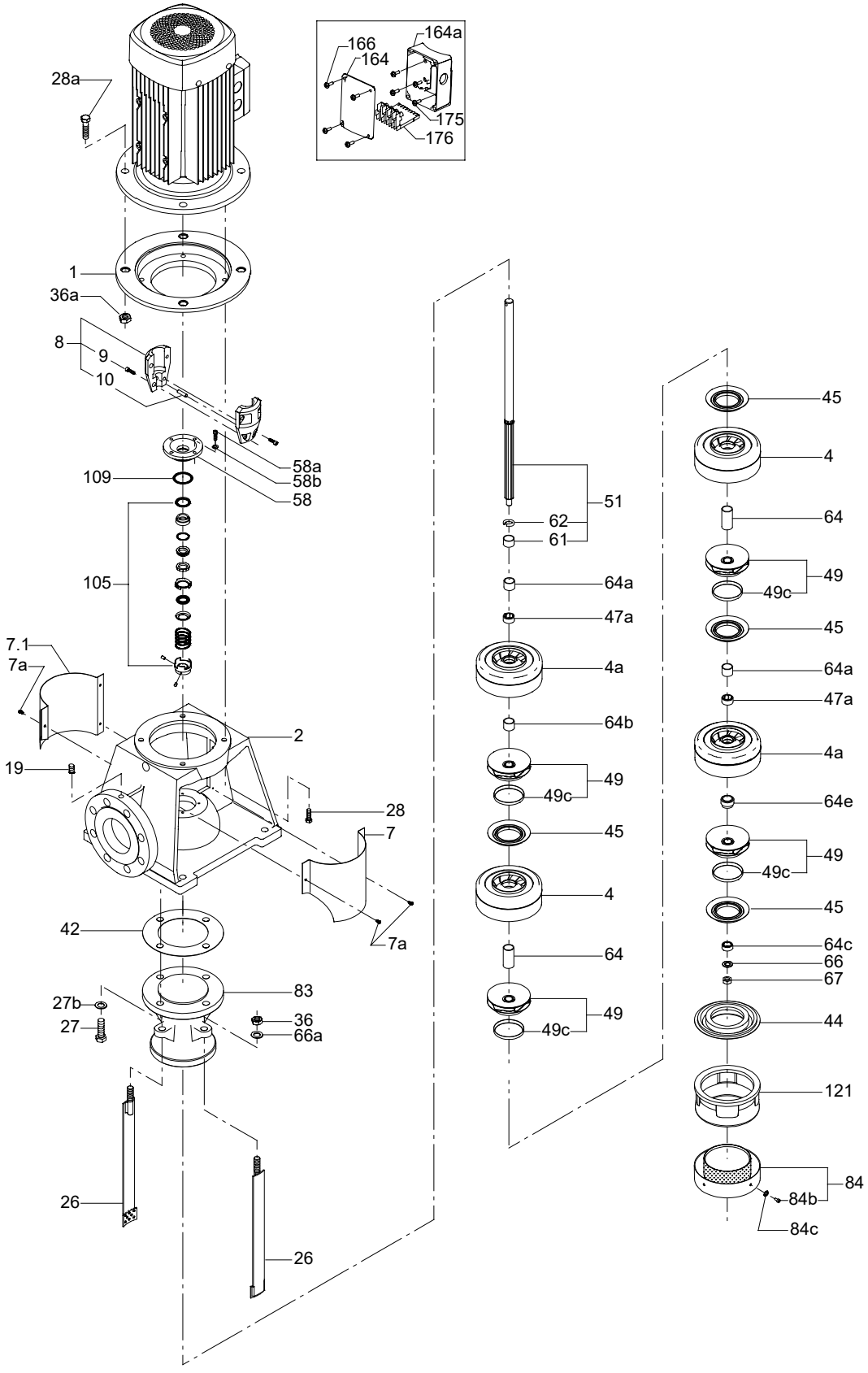

TM025302

23. Dosing and disinfection

SMART Digital S

DDA, DDC, DDE, up to 30 l/h, 1 x 100-240 V, 50/60 Hz

Service kits

Pump type	Valves	Materials			Kit description and product number				
		Dosing head	Gaskets	Valve balls	Valves + diaphragm pos. 1 + 2 + 3 + 7	Valves pos. 1 + 2	Diaphragm pos. 3	Complete dosing head pos. 1 + 2 + 3 + 4 + 5 + 6 + 7 + 8 + 9 + 10	
								Control variant [1]	
								B, P, A, AR	FC, FCM
DDE 6-10 DDC 6-10 DDC 9-7 DDA 7.5-16	Standard	PP	EPDM (E)	Ceramic (C)	97751427	97751599	97751707	97751104	97751116
			FKM (V)	Ceramic (C)	97751433	97751605	97751707	97751110	97751122
		PVC	EPDM (E)	Ceramic (C)	97751473	97751623	97751707	97751175	97751193
			FKM (V)	Ceramic (C)	97751479	97751629	97751707	97751181	97751199
			PTFE (T)	Ceramic (C)	97751485	97751635	97751707	97751187	97751205
		PVDF	EPDM (E)	Ceramic (C)	97751527	97751659	97751707	97751283	97751301
			FKM (V)	Ceramic (C)	97751533	97751665	97751707	97751289	97751307
			PTFE (T)	Ceramic (C)	97751539	97751671	97751707	97751295	97751313
		SS	PTFE (T)	Stainless steel (SS)	97751585	97751699	97751707	97751395	97751401
	Spring-loaded	PP	EPDM (E)	Ceramic (C)	97751428	97751600	97751707	97751105	97751117
			FKM (V)	Ceramic (C)	97751434	97751606	97751707	97751111	97751123
		PVC	EPDM (E)	Ceramic (C)	97751474	97751624	97751707	97751176	97751194
			FKM (V)	Ceramic (C)	97751480	97751630	97751707	97751182	97751200
			PTFE (T)	Ceramic (C)	97751486	97751636	97751707	97751188	97751206
		PVDF	EPDM (E)	Ceramic (C)	97751528	97751660	97751707	97751284	97751302
			FKM (V)	Ceramic (C)	97751534	97751666	97751707	97751290	97751308
			PTFE (T)	Ceramic (C)	97751540	97751672	97751707	97751296	97751314
		SS	PTFE (T)	Stainless steel (SS)	97751586	97751700	97751707	97751396	97751402
DDE 15-4 DDC 15-4 DDA 12-10 DDA 17-7	Standard	PP	EPDM (E)	Ceramic (C)	97751439	97751611	97751708	97751128	97751140
			FKM (V)	Ceramic (C)	97751445	97751617	97751708	97751134	97751146
		PVC	EPDM (E)	Ceramic (C)	97751491	97751641	97751708	97751211	97751229
			FKM (V)	Ceramic (C)	97751497	97751647	97751708	97751217	97751235
			PTFE (T)	Ceramic (C)	97751503	97751653	97751708	97751223	97751241
		PVDF	EPDM (E)	Ceramic (C)	97751545	97751677	97751708	97751319	97751337
			FKM (V)	Ceramic (C)	97751551	97751683	97751708	97751325	97751343
			PTFE (T)	Ceramic (C)	97751557	97751689	97751708	97751331	97751349
		SS	PTFE (T)	Stainless steel (SS)	97751591	97751705	97751708	97751407	97751413
	Spring-loaded	PP	EPDM (E)	Ceramic (C)	97751440	97751612	97751708	97751129	97751141
			FKM (V)	Ceramic (C)	97751446	97751618	97751708	97751135	97751147
		PVC	EPDM (E)	Ceramic (C)	97751492	97751642	97751708	97751212	97751230
			FKM (V)	Ceramic (C)	97751498	97751648	97751708	97751218	97751236
			PTFE (T)	Ceramic (C)	97751504	97751654	97751708	97751224	97751242
		PVDF	EPDM (E)	Ceramic (C)	97751546	97751678	97751708	97751320	97751338
			FKM (V)	Ceramic (C)	97751552	97751684	97751708	97751326	97751344
			PTFE (T)	Ceramic (C)	97751558	97751690	97751708	97751332	97751350
		SS	PTFE (T)	Stainless steel (SS)	97751592	97751706	97751708	97751408	97751414

Pump type	Valves	Materials			Kit description and product number				
		Dosing head	Gaskets	Valve balls	Valves + diaphragm pos. 1 + 2 + 3 + 7	Valves pos. 1 + 2	Diaphragm pos. 3	Complete dosing head pos. 1 + 2 + 3 + 4 + 5 + 6 + 7 + 8 + 9 + 10	
								Control variant [1]	
								B, P, A, AR	FC, FCM
DDA 30-4	Standard	PP	EPDM (E)	Ceramic (C)	97751461	97751611	97751709	97751151	97751163
			FKM (V)	Ceramic (C)	97751467	97751617	97751709	97751157	97751169
		PVC	EPDM (E)	Ceramic (C)	97751509	97751641	97751709	97751247	97751265
			FKM (V)	Ceramic (C)	97751515	97751647	97751709	97751253	97751271
			PTFE (T)	Ceramic (C)	97751521	97751653	97751709	97751259	97751277
		PVDF	EPDM (E)	Ceramic (C)	97751563	97751677	97751709	97751355	97751373
			FKM (V)	Ceramic (C)	97751569	97751683	97751709	97751361	97751379
			PTFE (T)	Ceramic (C)	97751575	97751689	97751709	97751367	97751385
		SS	PTFE (T)	Stainless steel (SS)	97751597	97751705	97751709	97751419	97751425
	Spring-loaded	PP	EPDM (E)	Ceramic (C)	97751462	97751612	97751709	97751152	97751164
			FKM (V)	Ceramic (C)	97751468	97751618	97751709	97751158	97751170
		PVC	EPDM (E)	Ceramic (C)	97751510	97751642	97751709	97751248	97751266
			FKM (V)	Ceramic (C)	97751516	97751648	97751709	97751254	97751272
			PTFE (T)	Ceramic (C)	97751522	97751654	97751709	97751260	97751278
		PVDF	EPDM (E)	Ceramic (C)	97751564	97751678	97751709	97751356	97751374
			FKM (V)	Ceramic (C)	97751570	97751684	97751709	97751362	97751380
			PTFE (T)	Ceramic (C)	97751576	97751690	97751709	97751368	97751386
		SS	PTFE (T)	Stainless steel (SS)	97751598	97751706	97751709	97751420	97751426

1 The dosing heads of DDA control variants FC and FCM are equipped with a pressure sensor.

Control cube (only DDA and DDC)

Pos.	Description	Kit No
12	Screws, plugs	97790966
13	Display cover	97790958

Deaeration valve

Pos.	Materials		Kit No
	Valve body	Gasket	
9	PP	EPDM (E)	97790986
		FKM (V)	97790987
	PVC	EPDM (E)	97790988
		FKM (V)	97790989
	PVDF	EPDM (E)	97790990
		FKM (V)	97790991

Dosing head cover

Pos.	Description	Type	Kit No
8	DDA, DDC, DDE up to 17l/h	PP	97790967
	DDA 30 l/h	SS	97790968

Mounting plate

Pos.	Description	Kit No
11	Mounting plate and screws	97790957

Power cable

Pos.	Country	Type	Kit No
14	EU	F	97790969
	USA	B	97790970
	Canada	B	97790970
	UK	G	97790981
	Australia	I	97790982
	New Zealand	I	97790982
	Taiwan	I	97790982
	Japan	J	97790984
	Switzerland	E	97790983
	Argentina	L	97790985

DDA, DDC, DDE, up to 17 l/h

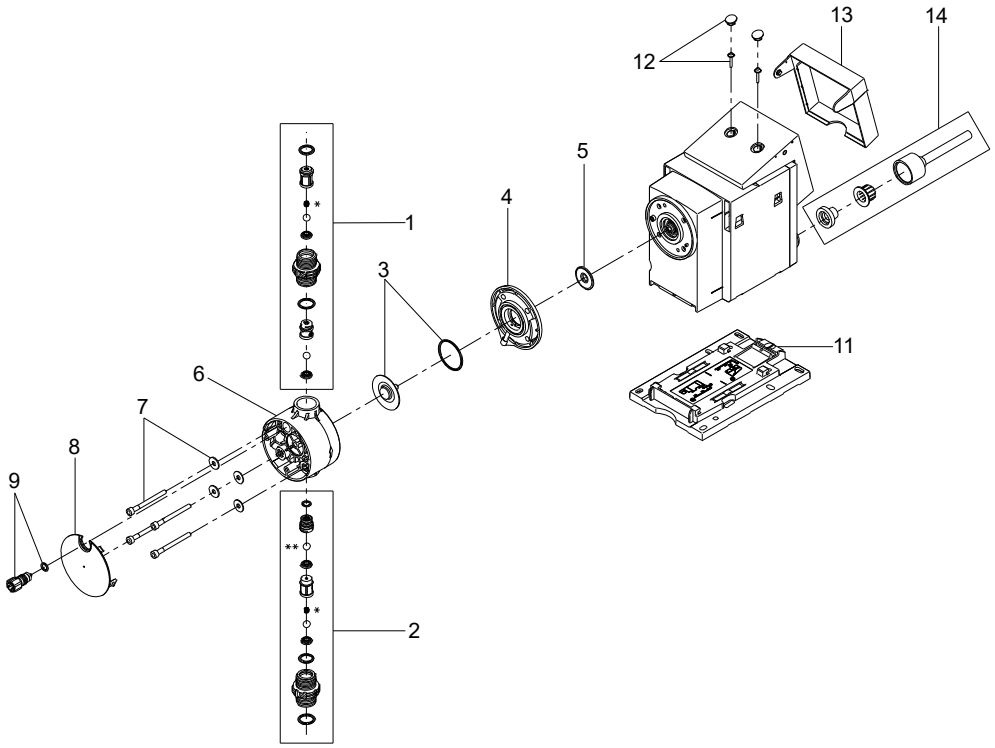

TM049566

DDA, 30 l/h

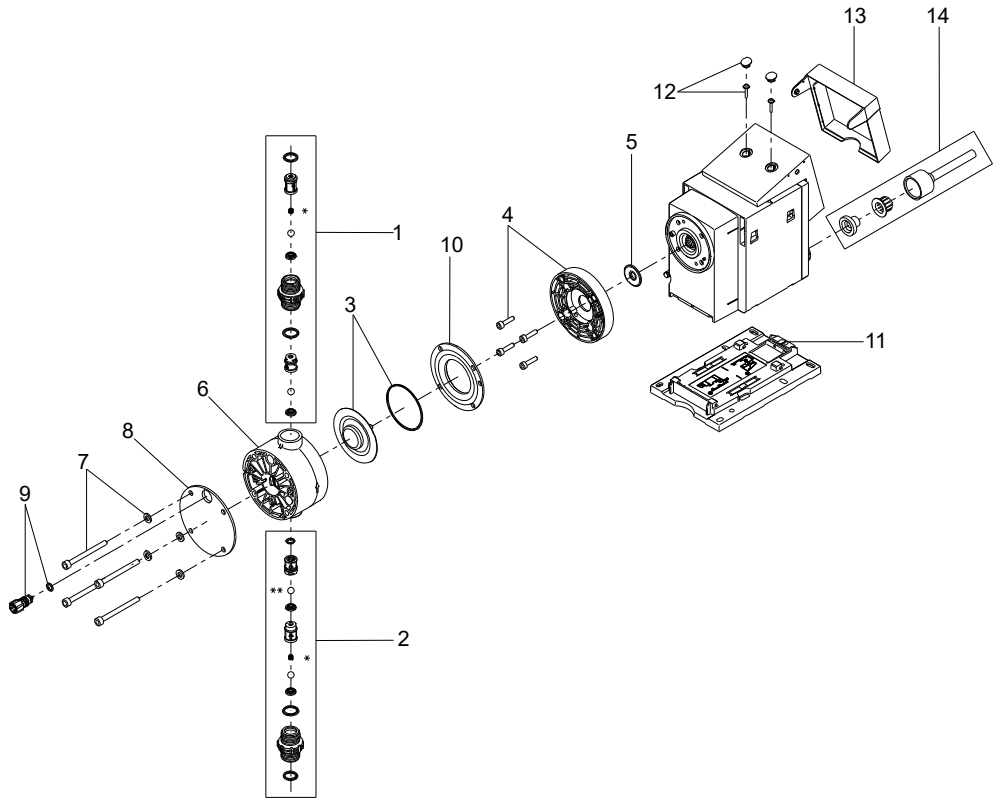

TM049565

* Only for spring-loaded valves.
**Not for spring-loaded valves.

SMART Digital XL

DDA, DDE, 60-200 l/h, 1 x 100-240 V, 50/60 Hz

Service kits

Pump type	Valves	Materials			Kit description and product number							
					Valves + diaphragm		Valve	Diaphragm		Complete dosing head		
					pos. 1 + 2 + 3 + 4 + 7		pos. 1 + 2	pos. 3 + 4		pos. 1 + 2 + 3 + 4 + 6 + 7 + 8 + 9 + 10		
										Control variant:		
		Head	Gasket	Valve ball	Standard	DLD [1]		Standard	DLD [1]	DDE-B, DDE-AR, DDA-AR	DDA-AR (DLD [1])	DDA-FCM [2]
DDA 60-10 DDE 60-10	Std	PVC	EPDM	Ceramic	99151275	99151299	99151369	99151383	99151384	99151389	99151431	99151474
			FKM	Ceramic	99151276	99151300	99151370	99151383	99151384	99151390	99151432	99151475
			PTFE	Ceramic	99151277	99151301	99151371	99151383	99151384	99151391	99151433	99151476
			PTFE	PTFE	99192660	99192764	99192788	99151383	99151384	99192796	99192820	99192844
		PVDF	EPDM	Ceramic	99151278	99151302	99151372	99151383	99151384	99151392	99151434	99151477
			FKM	Ceramic	99151279	99151303	99151373	99151383	99151384	99151393	99151435	99151478
			PTFE	Ceramic	99151280	99151304	99151374	99151383	99151384	99151394	99151436	99151479
			PTFE	PTFE	99192661	99192765	99192789	99151383	99151384	99192797	99192821	99192845 99422697 [3]
		SS	EPDM	SS	99192662	99192766	99192790	99151383	99151384	99192798	99192822	99192846
			FKM	SS	99192743	99192767	99192791	99151383	99151384	99192799	99192823	99192847
			PTFE	SS	99151281	99151305	99151375	99151383	99151384	99151395	99151437	99151480
	Spring loaded	PVC	EPDM	Ceramic	99151282	99151306	99151376	99151383	99151384	99151396	99151438	99151481
			FKM	Ceramic	99151293	99151307	99151377	99151383	99151384	99151397	99151439	99151482
			PTFE	Ceramic	99151294	99151308	99151378	99151383	99151384	99151398	99151440	99151483
			PTFE	PTFE	99192744	99192768	99192792	99151383	99151384	99192800	99192824	99192848
		PVDF	EPDM	Ceramic	99151295	99151309	99151379	99151383	99151384	99151399	99151441	99151484
			FKM	Ceramic	99151296	99151310	99151380	99151383	99151384	99151400	99151442	99151485
			PTFE	Ceramic	99151297	99151311	99151381	99151383	99151384	99151401	99151443	99151486
			PTFE	PTFE	99192745	99192769	99192793	99151383	99151384	99192801	99192825	99192849
		SS	EPDM	SS	99192746	99192770	99192794	99151383	99151384	99192802	99192826	99192850
			FKM	SS	99192747	99192771	99192795	99151383	99151384	99192803	99192827	99192851
			PTFE	SS	99151298	99151312	99151382	99151383	99151384	99151402	99151444	99151487
DDA 120-7 DDE 120-7	Std	PVC	EPDM	Ceramic	99151313	99151327	99151369	99151385	99151386	99151403	99151445	99151488
			FKM	Ceramic	99151314	99151328	99151370	99151385	99151386	99151404	99151446	99151489
			PTFE	Ceramic	99151315	99151329	99151371	99151385	99151386	99151405	99151447	99151490
			PTFE	PTFE	99192748	99192772	99192788	99151385	99151386	99192804	99192828	99192852
		PVDF	EPDM	Ceramic	99151316	99151330	99151372	99151385	99151386	99151406	99151448	99151491
			FKM	Ceramic	99151317	99151331	99151373	99151385	99151386	99151407	99151449	99151492
			PTFE	Ceramic	99151318	99151332	99151374	99151385	99151386	99151408	99151450	99151493
			PTFE	PTFE	99192749	99192773	99192789	99151385	99151386	99192805	99192829	99192853 99422699 [3]
		SS	EPDM	SS	99192750	99192774	99192790	99151385	99151386	99192806	99192830	99192854
			FKM	SS	99192751	99192775	99192791	99151385	99151386	99192807	99192831	99192855
			PTFE	SS	99151319	99151333	99151375	99151385	99151386	99151409	99151451	99151494
	Spring loaded	PVC	EPDM	Ceramic	99151320	99151334	99151376	99151385	99151386	99151410	99151452	99151495
			FKM	Ceramic	99151321	99151335	99151377	99151385	99151386	99151411	99151453	99151496
			PTFE	Ceramic	99151322	99151336	99151378	99151385	99151386	99151412	99151454	99151497
			PTFE	PTFE	99192752	99192776	99192792	99151385	99151386	99192808	99192832	99192856
		PVDF	EPDM	Ceramic	99151323	99151337	99151379	99151385	99151386	99151413	99151455	99151498
			FKM	Ceramic	99151324	99151338	99151380	99151385	99151386	99151414	99151456	99151499
			PTFE	Ceramic	99151325	99151339	99151381	99151385	99151386	99151415	99151457	99151500
			PTFE	PTFE	99192753	99192777	99192793	99151385	99151386	99192809	99192833	99192857
		SS	EPDM	SS	99192754	99192778	99192794	99151385	99151386	99192810	99192834	99192858
			FKM	SS	99192755	99192779	99192795	99151385	99151386	99192811	99192835	99192859
			PTFE	SS	99151326	99151340	99151382	99151385	99151386	99151416	99151458	99151501

Pump type	Valves	Materials: Head	Materials: Gasket	Materials: Valve ball	Kit description and product number: Valves + diaphragm pos. 1 + 2 + 3 + 4 + 7: Standard	Valves + diaphragm pos. 1 + 2 + 3 + 4 + 7: DLD [1]	Valve pos. 1 + 2	Diaphragm pos. 3 + 4: Standard	Diaphragm pos. 3 + 4: DLD [1]	Complete dosing head pos. 1 + 2 + 3 + 4 + 6 + 7 + 8 + 9 + 10: Control variant: DDE-B, DDE-AR, DDA-AR	Control variant: DDA-AR (DLD [1])	Control variant: DDA-FCM [2]
DDA 200-4 DDE 200-4	Std	PVC	EPDM	Ceramic	99151341	99151355	99151369	99151387	99151388	99151417	99151459	99151502
			FKM	Ceramic	99151342	99151356	99151370	99151387	99151388	99151418	99151460	99151503
			PTFE	Ceramic	99151343	99151357	99151371	99151387	99151388	99151419	99151462	99151504
			PTFE	PTFE	99192756	99192780	99192788	99151387	99151388	99192812	99192836	99192860
		PVDF	EPDM	Ceramic	99151344	99151358	99151372	99151387	99151388	99151420	99151463	99151505
			FKM	Ceramic	99151345	99151359	99151373	99151387	99151388	99151421	99151464	99151506
			PTFE	Ceramic	99151346	99151360	99151374	99151387	99151388	99151422	99151465	99151507
			PTFE	PTFE	99192757	99192781	99192789	99151387	99151388	99192813	99192837	99192861 99422700 [3]
		SS	EPDM	SS	99192758	99192782	99192790	99151387	99151388	99192814	99192838	99192862
			FKM	SS	99192759	99192783	99192791	99151387	99151388	99192815	99192839	99192863
			PTFE	SS	99151347	99151361	99151375	99151387	99151388	99151423	99151466	99151508
	Spring loaded	PVC	EPDM	Ceramic	99151348	99151362	99151376	99151387	99151388	99151424	99151467	99151509
			FKM	Ceramic	99151349	99151363	99151377	99151387	99151388	99151425	99151468	99151510
			PTFE	Ceramic	99151350	99151364	99151378	99151387	99151388	99151426	99151469	99151511
			PTFE	PTFE	99192760	99192784	99192792	99151387	99151388	99192816	99192840	99192864
		PVDF	EPDM	Ceramic	99151351	99151365	99151379	99151387	99151388	99151427	99151470	99151512
			FKM	Ceramic	99151352	99151366	99151380	99151387	99151388	99151428	99151471	99151513
			PTFE	Ceramic	99151353	99151367	99151381	99151387	99151388	99151429	99151472	99151514
			PTFE	PTFE	99192761	99192785	99192793	99151387	99151388	99192817	99192841	99192865
		SS	EPDM	SS	99192762	99192786	99192794	99151387	99151388	99192818	99192842	99192866
			FKM	SS	99192763	99192787	99192795	99151387	99151388	99192819	99192843	99192867
			PTFE	SS	99151354	99151368	99151382	99151387	99151388	99151430	99151473	99151515

1 DLD = Diaphrame Leakage Detection.

2 The dosing head of DDA control variant FCM is equipped with a pressure sensor.

3 Kit only for pumps with Sapphire Pressure Sensor for fluoride containing media.

Std = Standard

SS = Stainless steel

Deaeration valve

NOTE: The replacement of the deaeration valve requires the tool kit Smart XL.

Pos.	Materials: Valve body	Materials: Gasket	Kit No.
9	PVC	EPDM	99580608
		FKM	99580609
	PVDF	EPDM	99580610
		FKM	99580611

Tool kit Smart XL

Description	Quantity	Kit no.
Tool Kit for Smart XL (3D printed tools, TORX PLUS 15 IP and 25 IP bits)	1	99396558

Mounting plate

Pos.	Description	Quantity	Kit no.
11	Mounting plate	1	99151552
12	Screw: Delta-PT 35x16	8	
18	Screw Cap	2	
19	Screw Delta-PT 50x22	2	
20	Washer	2	

Flange

Pos.	Description	Quantity	Kit no.: Pump type: DDA 120-7 DDE 120-7	Kit no.: Pump type: DDA 200-4 DDE 200-4
5	Pump head flange	1	99332869	99332870
7	Screw	4		
4	O-ring	1		

Cover set

Pos.	Description	Quantity	Kit no.
13	Cover for Cube	1	99517558
12	Cover for screw	2	
13a	Cover for plug	6	

Diaphragm Leakage Detection (DLD)

Pos.	Description	Quantity	Kit no.
15	Pressure switch and gasket	1	*99185328*

I/O board

Pos.	Description	Quantity	Kit No.		
			Control variant:		
			DDA-AR DDA-FCM	DDE-B	DDE-AR
17	I/O board	1	*99332897*	*99332898*	*99332899*
12	Screw	4			

Control cube

Pos.	Description	Quantity	Kit No.		
			Control variant:		
			DDA-AR DDA-FCM	DDE-B	DDE-AR
16	Control cube	1	*99332894*	*99332895*	*99332896*
12	Screw	2			
-	O-ring	1			

Power cable

Pos.	Country	Type	Kit No.
14 14a	EU	F	*99151545*
	USA	B	*99151546*
	Canada	B	*99151546*
	UK	G	*99151547*
	Australia	I	*99151548*
	New Zealand	I	*99151548*
	Taiwan	I	*99151548*
	Japan	J	*99151549*
	Switzerland	E	*99151550*
	Argentina	L	*99151551*

Cover plate

Pos.	Pump type	Variant	Kit No.
8	DDA 60-10 DDE 60-10	without DLD	*99529625*
		with DLD	*99529632*
	DDA 120-7 DDE 120-7	without DLD	*99529644*
		with DLD	*99529650*
	DDA 200-4 DDE 200-4	without DLD	*99529652*
		with DLD	*99529653*

Screws

Pos.	Pump type	Dosing head material	Quantity	Kit No.
7	DDA 60-10 DDE 60-10	PVC, PVDF	12	*99396530*
	DDA 60-10 DDE 60-10	SS	12	*99396531*
	DDA 120-7 DDE 120-7 DDA 200-4 DDE 200-4	PVC, PVDF	12	*99396532*
	DDA 120-7 DDE 120-7 DDA 200-4 DDE 200-4	SS	12	*99396553*
12	All	All	24	*99517706*

Washer

Pos.	Description	Quantity	Kit No.
7	Washer	24	*99540321*

O-ring

Pos.	Description	Quantity	Kit No.
4	O-ring - EPDM	30	*99517709*
2	O-ring - FKM	20	*99517744*
	O-ring - PTFE/FKM	20	*99517971*
	O-ring - EPDM	20	*99517983*

DDA, DDE, 60 l/h

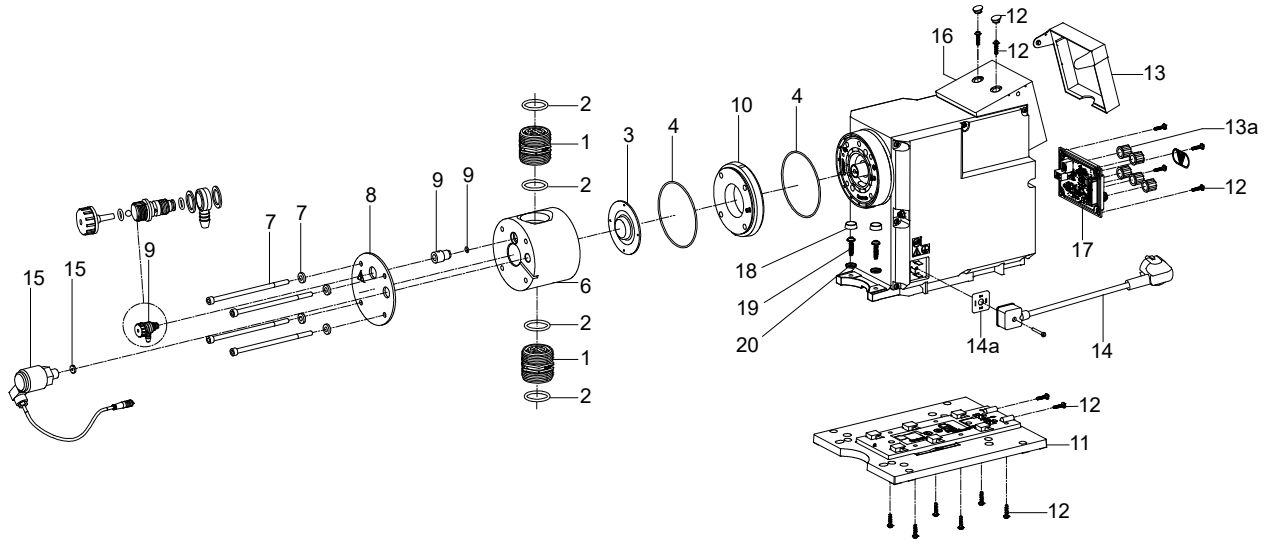

DDA, DDE, 120 - 200 l/h

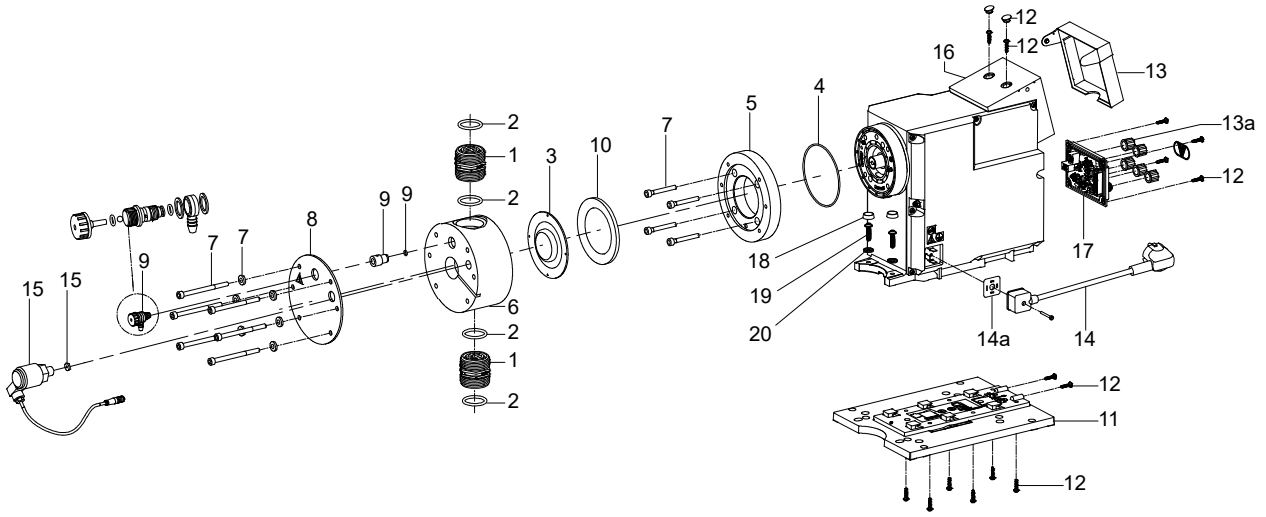

DME

DME 2 to 48 l/h, 1 x 100-240 V, 50/60 Hz

Pump	Valves	Materials	Product numbers			
			Complete dosing head pos. 1 + 2 + 3 (x2) + 4 + 5	Valves + diaphragm pos. 1 + 2 + 3 (x2)	Valves pos. 3 (x2)	Diaphragm pos. 2
DME 2-18 DMS 2-11	Standard	PP/EPDM/ceramic	96440665	96441131	96440711	96440740
		PP/FKM/ceramic	96446814	96446774	96446836	96440740
		PVDF/FKM/ceramic	96440667	96441133	96440713	96440740
		PVDF/PTFE/ceramic	96636077	96635984	96574015	96440740
		PVDF/PTFE/PTFE	96900363	96900365	96574016	96440740
		Stainless steel/FKM/stainless steel	96440669	96441135	96440723	96440740
	Spring-loaded	PP/EPDM/ceramic	96440666	96441132	96440712	96440740
		PP/FKM/ceramic	96446815	96446775	96446837	96440740
		PVDF/FKM/ceramic	96440668	96441134	96440722	96440740
		PVDF/PTFE/ceramic	96636079	96636063	96635983	96440740
		Stainless steel/FKM/stainless steel	96440670	96441136	96440724	96440740
DMS 4-7	Standard	PP/EPDM/ceramic	96440699	96441177	96440711	96440750
		PP/FKM/ceramic	96446818	96446782	96446836	96440750
		PVDF/FKM/ceramic	96440701	96441179	96440713	96440750
		PVDF/PTFE/ceramic	96690668	96636064	96574015	96440750
		PVDF/PTFE/PTFE	96900384	96900385	96574016	96440750
		Stainless steel/FKM/stainless steel	96440703	96441181	96440723	96440750
	Spring-loaded	PP/EPDM/ceramic	96440700	96441178	96440712	96440750
		PP/FKM/ceramic	96446819	96446783	96446837	96440750
		PVDF/FKM/ceramic	96440702	96441180	96440722	96440750
		PVDF/PTFE/ceramic	96690683	96636066	96635983	96440750
		Stainless steel/FKM/stainless steel	96440704	96441182	96440724	96440750
DME 8-10 DMS 8-5	Standard	PP/EPDM/ceramic	96440671	96441149	96440711	96440743
		PP/FKM/ceramic	96446816	96446780	96446836	96440743
		PVDF/FKM/ceramic	96440673	96441151	96440713	96440743
		PVDF/PTFE/ceramic	96636083	96636067	96574015	96440743
		PVDF/PTFE/PTFE	96900366	96900367	96574016	96440743
		Stainless steel/FKM/stainless steel	96440675	96441153	96440723	96440743
	Spring-loaded	PP/EPDM/ceramic	96440672	96441150	96440712	96440743
		PP/FKM/ceramic	96446817	96446781	96446837	96440743
		PVDF/FKM/ceramic	96440674	96441152	96440722	96440743
		PVDF/PTFE/ceramic	96636085	96636069	96635983	96440743
		Stainless steel/FKM/stainless steel	96440676	96441154	96440724	96440743
DME 12-6 DMS 12-3	Standard	PP/EPDM/ceramic	96440659	96441125	96440711	96440739
		PP/FKM/ceramic	96446812	96446772	96446836	96440739
		PVDF/FKM/ceramic	96440661	96441127	96440713	96440739
		PVDF/PTFE/ceramic	96636087	96636070	96574015	96440739
		PVDF/PTFE/PTFE	96900368	96900369	96574016	96440739
		Stainless steel/FKM/stainless steel	96440663	96441129	96440723	96440739
	Spring-loaded	PP/EPDM/ceramic	96440660	96441126	96440712	96440739
		PP/FKM/ceramic	96446813	96446773	96446837	96440739
		PVDF/FKM/ceramic	96440662	96441128	96440722	96440739
		PVDF/PTFE/ceramic	96690541	96636071	96635983	96440739
		Stainless steel/FKM/stainless steel	96440664	96441130	96440724	96440739

Pump	Valves	Materials	Product numbers			
			Complete dosing head pos. 1 + 2 + 3 (x2) + 4 + 5	Valves + diaphragm pos. 1 + 2 + 3 (x2)	Valves pos. 3 (x2)	Diaphragm pos. 2
DME 19-6	Standard	PP/EPDM/ceramic	96440647	96441137	96440711	96440741
		PP/FKM/ceramic	96446808	96446776	96446836	96440741
		PVDF/FKM/ceramic	96440649	96441139	96440713	96440741
		PVDF/PTFE/ceramic	96636091	96636072	96574015	96440741
		PVDF/PTFE/PTFE	96900370	96900371	96574016	96440741
		Stainless steel/FKM/stainless steel	96440651	96441141	96440723	96440741
	Spring-loaded	PP/EPDM/ceramic	96440648	96441138	96440712	96440741
		PP/FKM/ceramic	96446809	96446777	96446837	96440741
		PVDF/FKM/ceramic	96440650	96441140	96440722	96440741
		PVDF/PTFE/ceramic	96636093	96636073	96635983	96440741
		Stainless steel/FKM/stainless steel	96440652	96441142	96440724	96440741
DME 48-3	Standard	PP/EPDM/ceramic	96440653	96441143	96440711	96440742
		PP/FKM/ceramic	96446810	96446778	96446836	96440742
		PVDF/FKM/ceramic	96440655	96441145	96440713	96440742
		PVDF/PTFE/ceramic	96636095	96636074	96574015	96440742
		Stainless steel/FKM/stainless steel	96440657	96441147	96440723	96440742
	Spring-loaded	PP/EPDM/ceramic	96440654	96441144	96440712	96440742
		PP/FKM/ceramic	96446811	96446779	96446837	96440742
		PVDF/FKM/ceramic	96440656	96441146	96440722	96440742
		PVDF/PTFE/ceramic	96636097	96636075	96635983	96440742
		Stainless steel/FKM/stainless steel	96440658	96441148	96440724	96440742

DME 2 to 48 l/h

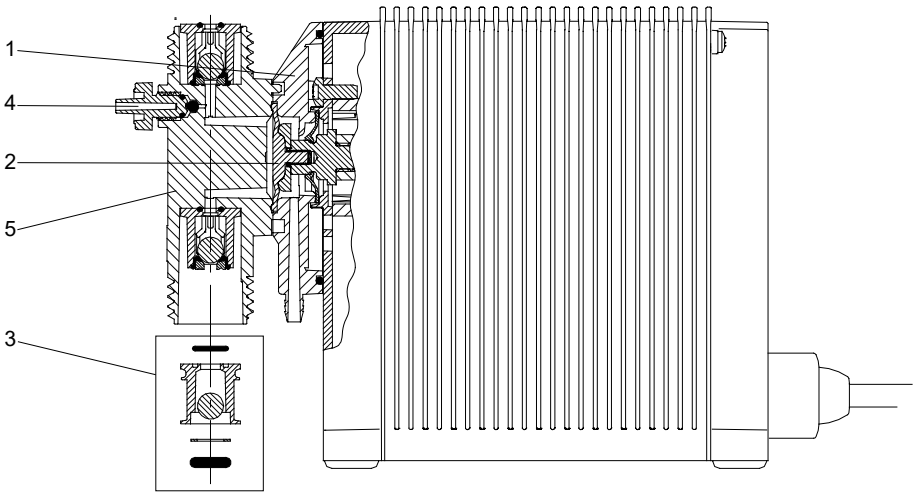

TM019976

Connection sets for DME (up to 48 l/h)

Info	Kit No
Connection type 3 M30 PP 4/6 mm	96440468
Connection type 3 M30 PVDF 4/6 mm	96440469
Connection type 3 M30 PP 6/9 mm	96440470
Connection type 3 M30 PVDF 6/9 mm	96440471
Connection type 3 M30 PP 9/12 mm	96440474
Connection type 3 M30 PVDF 9/12 mm	96440475

DME 60-940 l/h, 1 x 100-240 V, 50/60 Hz

Service kit, DME 60-10

Model	Valves	Materials			Connection	Complete dosing head Pos. 1 + 2 + 3 + 4 + 5 + 6	Valves + diaphragm Pos. 1 + 2 + 3	Non-return valves Pos. 2 + 3	Diaphragm Pos. 1
		Dosing head	Gaskets	Valve balls					
DME 60-10	Spring loaded	PP	EPDM	Ceramic	NPT 3/4	96549405	96520368	96519446	96519470
			EPDM	Ceramic	Hoseclamp	96520459	96520368	96519446	96519470
			EPDM	Ceramic	Rp 3/4	96620070	96520368	96519446	96519470
			FKM	Ceramic	NPT 3/4	96549406	96520369	96519447	96519470
			FKM	Ceramic	Hoseclamp	96520460	96520369	96519447	96519470
			FKM	Ceramic	Rp 3/4	96620071	96520369	96519447	96519470
		PVDF	FKM	Ceramic	NPT 3/4	96549407	96520370	96519448	96519470
			FKM	Ceramic	Hoseclamp	96520461	96520370	96519448	96519470
			FKM	Ceramic	Rp 3/4	96620072	96520370	96519448	96519470
			PTFE	Ceramic	Hoseclamp	96945474	96690557	96690553	96519470
		Stainless Steel	FKM	Stainless Steel	NPT 3/4	96549408	96520371	96519449	96519470
			FKM	Stainless Steel	Rp 3/4	96520462	96520371	96519449	96519470
	Standard	PP	EPDM	Ceramic	NPT 3/4	96549401	96520364	96519442	96519470
			EPDM	Ceramic	Hoseclamp	96520454	96520364	96519442	96519470
			EPDM	Ceramic	Rp 3/4	96620067	96520364	96519442	96519470
			FKM	Ceramic	NPT 3/4	96549402	96520365	96519443	96519470
			FKM	Ceramic	Hoseclamp	96520455	96520365	96519443	96519470
			FKM	Ceramic	Rp 3/4	96620068	96520365	96519443	96519470
		PVDF	FKM	Ceramic	NPT 3/4	96549403	96520366	96519444	96519470
			FKM	Ceramic	Hoseclamp	96520456	96520366	96519444	96519470
			FKM	Ceramic	Rp 3/4	96620069	96520366	96519444	96519470
			PTFE	Ceramic	Hoseclamp	96690542	96690556	96573952	96519470
		Stainless Steel	FKM	Stainless Steel	NPT 3/4	96549404	96520367	96519445	96519470
			FKM	Stainless Steel	Rp 3/4	96520458	96520367	96519445	96519470
			PTFE	Stainless Steel	Rp 3/4	97939086	97571911	97571912	96519470

Service kit, DME 150-4

Model	Valves	Materials			Connection	Complete dosing head Pos. 1 + 2 + 3 + 4 + 5 + 6	Valves + diaphragm Pos. 1 + 2 + 3	Non-return valves Pos. 2 + 3	Diaphragm Pos. 1
		Dosing head	Gaskets	Valve balls					
DME 150-4	Spring loaded	PP	EPDM	Ceramic	NPT 3/4	*96549434*	*96520376*	*96519446*	*96519471*
			EPDM	Ceramic	Hoseclamp	*96520467*	*96520376*	*96519446*	*96519471*
			EPDM	Ceramic	Rp 3/4	*96620076*	*96520376*	*96519446*	*96519471*
			FKM	Ceramic	NPT 3/4	*96549435*	*96520377*	*96519447*	*96519471*
			FKM	Ceramic	Hoseclamp	*96520468*	*96520377*	*96519447*	*96519471*
			FKM	Ceramic	Rp 3/4	*96620077*	*96520377*	*96519447*	*96519471*
		PVDF	FKM	Ceramic	NPT 3/4	*96549436*	*96520378*	*96519448*	*96519471*
			FKM	Ceramic	Hoseclamp	*96520469*	*96520378*	*96519448*	*96519471*
			FKM	Ceramic	Rp 3/4	*96620078*	*96520378*	*96519448*	*96519471*
			PTFE	Ceramic	Hoseclamp	*96690546*	*96690559*	*96690553*	*96519471*
		SS	FKM	Stainless Steel	NPT 3/4	*96549437*	*96520379*	*96519449*	*96519471*
			FKM	Stainless Steel	Rp 3/4	*96520470*	*96520379*	*96519449*	*96519471*
	Standard	PP	EPDM	Ceramic	NPT 3/4	*96549409*	*96520372*	*96519442*	*96519471*
			EPDM	Ceramic	Hoseclamp	*96520463*	*96520372*	*96519442*	*96519471*
			EPDM	Ceramic	Rp 3/4	*96620073*	*96520372*	*96519442*	*96519471*
			FKM	Ceramic	NPT 3/4	*96549431*	*96520373*	*96519443*	*96519471*
			FKM	Ceramic	Hoseclamp	*96520464*	*96520373*	*96519443*	*96519471*
			FKM	Ceramic	Rp 3/4	*96620074*	*96520373*	*96519443*	*96519471*
		PVDF	FKM	Ceramic	NPT 3/4	*96549432*	*96520374*	*96519444*	*96519471*
			FKM	Ceramic	Hoseclamp	*96520465*	*96520374*	*96519444*	*96519471*
			FKM	Ceramic	Rp 3/4	*96620075*	*96520374*	*96519444*	*96519471*
			PTFE	Ceramic	NPT 3/4	*97766484*	*96690558*	*96573952*	*96519471*
			PTFE	Ceramic	Hoseclamp	*96690544*	*96690558*	*96573952*	*96519471*
		SS	EPDM	Stainless Steel	NPT 3/4	*97908196*	*96631331*	*96578547*	*96519471*
			FKM	Stainless Steel	NPT 3/4	*96549433*	*96520375*	*96519445*	*96519471*
			FKM	Stainless Steel	Rp 3/4	*96520466*	*96520375*	*96519445*	*96519471*
			PTFE	Stainless Steel	Rp 3/4	*98125938*	*97571880*	*97571912*	*96519471*

Service kit, DME 375-10

Missing spare part numbers are available on request.

Dosing Head		Gasket		Valve Ball	
Material	**Description**	**Material**	**Description**	**Material**	**Description**
PP	Polypropylene	E	EPDM	C	Ceramic
PV	PVDF	T	PTFE / Teflon	G	Glass
SS	Stainless Steel	V	Viton / FKM / FPM	SS	Stainless Steel
				T	PTFE / Teflon
				Y	Hastelloy C

Model	Valves	Materials			Connection inlet	Complete dosing head Pos. 1 + 2 + 3 + 4 + 5 + 6	Valves + diaphragm Pos. 1 + 2 + 3	Valves Pos. 2 + 3	Diaphragm Pos. 1
		Dosing head	Gasket	Valve ball					
DME 375-10	Spring loaded	PP	E	G	NPT	*96561186*	*96520384*	*96519456*	*96519472*
					RP	*96520475*	*96520384*	*96519456*	*96519472*
				C	NPT			*96741736*	*96519472*
					RP			*96741736*	*96519472*
				SS	NPT		*97749007*	*96741739*	*96519472*
					RP		*97749007*	*96741739*	*96519472*
				T	NPT				*96519472*
					RP				*96519472*
			T	G	NPT				*96519472*
					RP				*96519472*
				C	NPT				*96519472*
					RP				*96519472*
				SS	NPT				*96519472*
					RP				*96519472*
				T	NPT				*96519472*
					RP				*96519472*
			V	G	NPT	*96561187*	*96520385*	*96519457*	*96519472*
					RP	*96520476*	*96520385*	*96519457*	*96519472*
				C	NPT	*98798923*		*96741741*	*96519472*
					RP			*96741741*	*96519472*
				SS	NPT				*96519472*
					RP				*96519472*
				T	NPT				*96519472*
					RP				*96519472*

Model	Valves	Materials			Connection inlet	Complete dosing head Pos. 1 + 2 + 3 + 4 + 5 + 6	Valves + diaphragm Pos. 1 + 2 + 3	Valves Pos. 2 + 3	Diaphragm Pos. 1
		Dosing head	Gasket	Valve ball					
DME 375-10	Spring loaded	PV	E	G	NPT			96741854	96519472
					RP			96741854	96519472
				C	NPT			96741852	96519472
					RP			96741852	96519472
				SS	NPT			96741856	96519472
					RP			96741856	96519472
				T	NPT				96519472
					RP				96519472
			T	G	NPT		99967098	96741859	96519472
					RP	99967099	99967098	96741859	96519472
				C	NPT		96690561	96690555	96519472
					RP	96690550	96690561	96690555	96519472
				SS	NPT			96741861	96519472
					RP			96741861	96519472
				T	NPT			96741864	96519472
					RP			96741864	96519472
			V	G	NPT	96561188	96520386	96519458	96519472
					RP	96520477	96520386	96519458	96519472
				C	NPT			96741866	96519472
					RP			96741866	96519472
				SS	NPT			96741869	96519472
					RP			96741869	96519472
				T	NPT				96519472
					RP				96519472
DME 375-10	Spring loaded	SS	E	G	NPT				96519472
					RP				96519472
				C	NPT				96519472
					RP				96519472
				SS	NPT			96741873	96519472
					RP			96741873	96519472
				T	NPT				96519472
					RP				96519472
DME 375-10	Spring loaded	SS	T	G	NPT				96519472
					RP				96519472
				C	NPT				96519472
					RP				96519472
				SS	NPT		98570606	98570604	96519472
					RP	98570605	98570606	98570604	96519472
				T	NPT				96519472
					RP				96519472
			V	G	NPT				96519472
					RP				96519472
				C	NPT				96519472
					RP				96519472
				SS	NPT	96561189	96520387	96519459	96519472
					RP	96520478	96520387	96519459	96519472
				T	NPT				96519472
					RP				96519472

Model	Valves	Materials			Connection inlet	Complete dosing head Pos. 1 + 2 + 3 + 4 + 5 + 6	Valves + diaphragm Pos. 1 + 2 + 3	Valves Pos. 2 + 3	Diaphragm Pos. 1
		Dosing head	Gasket	Valve ball					
DME 375-10	Standard	PP	E	G	NPT	96561182	96520380	96519452	96519472
				G	RP		96520380	96519452	96519472
				C	NPT	96967724	99838531	96741735	96519472
				C	RP	99710176	99838531	96741735	96519472
				SS	NPT	97908194	97851907	96741737	96519472
				SS	RP	97521700	97851907	96741737	96519472
				T	NPT				96519472
				T	RP				96519472
			T	G	NPT				96519472
				G	RP				96519472
				C	NPT	98737441			96519472
				C	RP				96519472
				SS	NPT				96519472
				SS	RP				96519472
				T	NPT				96519472
				T	RP				96519472
			V	G	NPT	96561183	96520381	96519453	96519472
				G	RP		96520381	96519453	96519472
				C	NPT		98561966	96741740	96519472
				C	RP	99699657	98561966	96741740	96519472
				SS	NPT		97919262	96741742	96519472
				SS	RP	97915359	97919262	96741742	96519472
				T	NPT				96519472
				T	RP				96519472
DME 375-10	Standard	PV	E	G	NPT			96741853	96519472
				G	RP			96741853	96519472
				C	NPT			96741841	96519472
				C	RP			96741841	96519472
				SS	NPT			96741855	96519472
				SS	RP			96741855	96519472
				T	NPT				96519472
				T	RP				96519472
			T	G	NPT	97766496		96748547	96519472
				G	RP			96748547	96519472
				C	NPT		96690560	96690554	96519472
				C	RP	96690547	96690560	96690554	96519472
				SS	NPT	98884106		96741860	96519472
				SS	RP			96741860	96519472
				T	NPT	97695393	96962893	96748545	96519472
				T	RP		96962893	96748545	96519472
			V	G	NPT	96561184	96520382	96519454	96519472
				G	RP		96520382	96519454	96519472
				C	NPT	97568698		96741865	96519472
				C	RP	99554255		96741865	96519472
				SS	NPT			96741868	96519472
				SS	RP			96741868	96519472
				T	NPT				96519472
				T	RP				96519472
				Y	NPT			96796910	
				Y	RP			96796910	

Model	Valves	Materials			Connection inlet	Complete dosing head Pos. 1 + 2 + 3 + 4 + 5 + 6	Valves + diaphragm Pos. 1 + 2 + 3	Valves Pos. 2 + 3	Diaphragm Pos. 1
		Dosing head	Gasket	Valve ball					
DME 375-10	Standard	SS	E	G	NPT				96519472
					RP				96519472
				C	NPT	97915412	97919267		96519472
					RP		97919267		96519472
				SS	NPT	98132956	96900295	96741871	96519472
					RP	99928202	96900295	96741871	96519472
				T	NPT				96519472
					RP				96519472
			T	G	NPT				96519472
					RP				96519472
				C	NPT				96519472
					RP				96519472
				SS	NPT	99519703	97571877	97571913	96519472
					RP	99868246	97571877	97571913	96519472
				T	NPT				96519472
					RP				96519472
			V	G	NPT				96519472
					RP				96519472
				C	NPT				96519472
					RP				96519472
				SS	NPT	96561185	96520383	96519455	96519472
					RP	96520474	96520383	96519455	96519472
				T	NPT				96519472
					RP				96519472

Service kit, DME 940-4

Missing spare part numbers are available on request.

Dosing Head		Gasket		Valve Ball	
Material	Description	Material	Description	Material	Description
PP	Polypropylene	E	EPDM	C	Ceramic
PV	PVDF	T	PTFE / Teflon	G	Glass
SS	Stainless Steel	V	Viton / FKM / FPM	SS	Stainless Steel
				T	PTFE / Teflon
				Y	Hastelloy C

Model	Valves	Materials			Connection inlet	Complete dosing head Pos. 1 + 2 + 3 + 4 + 5 + 6	Valves + diaphragm Pos. 1 + 2 + 3	Valves Pos. 2 + 3	Diaphragm Pos. 1
		Dosing head	Gasket	Valve ball					
DME 940-4	Spring loaded	PP	E	G	NPT	96561204	96520399	96519456	96519473
					RP	96520483	96520399	96519456	96519473
				C	NPT			96741736	96519473
					RP			96741736	96519473
				SS	NPT			96741739	96519473
					RP			96741739	96519473
				T	NPT				96519473
					RP				96519473
			T	G	NPT				96519473
					RP				96519473
				C	NPT				96519473
					RP				96519473
				SS	NPT				96519473
					RP				96519473
				T	NPT				96519473
					RP				96519473
			V	G	NPT	96561205	96520400	96519457	96519473
					RP	96520484	96520400	96519457	96519473
				C	NPT			96741741	96519473
					RP			96741741	96519473
				SS	NPT		97919264	96741743	96519473
					RP	97915396	97919264	96741743	96519473
				T	NPT				96519473
					RP				96519473
DME 940-4	Spring loaded	PV	E	G	NPT			96741854	96519473
					RP			96741854	96519473
				C	NPT			96741852	96519473
					RP			96741852	96519473
				SS	NPT			96741856	96519473
					RP			96741856	96519473
				T	NPT				96519473
					RP				96519473
DME 940-4	Spring loaded	PV	T	G	NPT			96741859	96519473
					RP			96741859	96519473
				C	NPT		96690563	96690555	96519473
					RP	96690552	96690563	96690555	96519473
				SS	NPT			96741861	96519473
					RP			96741861	96519473
				T	NPT			96741864	96519473
					RP			96741864	96519473
			V	G	NPT	96561206	96520401	96519458	96519473
					RP	96520485	96520401	96519458	96519473
				C	NPT			96741866	96519473
					RP			96741866	96519473
				SS	NPT			96741869	96519473
					RP			96741869	96519473
				T	NPT				96519473
					RP				96519473

Model	Valves	Materials			Connection inlet	Complete dosing head Pos. 1 + 2 + 3 + 4 + 5 + 6	Valves + diaphragm Pos. 1 + 2 + 3	Valves Pos. 2 + 3	Diaphragm Pos. 1
		Dosing head	Gasket	Valve ball					
DME 940-4	Spring loaded	SS	E	G	NPT				96519473
					RP				96519473
				C	NPT				96519473
					RP				96519473
				SS	NPT		99513875	96741873	96519473
					RP		99513875	96741873	96519473
				T	NPT				96519473
					RP				96519473
			T	G	NPT				96519473
					RP				96519473
				C	NPT				96519473
					RP				96519473
				SS	NPT		98570601	98570604	96519473
					RP	98570592	98570601	98570604	96519473
				T	NPT				96519473
					RP				96519473
			V	G	NPT				96519473
					RP				96519473
				C	NPT				96519473
					RP				96519473
				SS	NPT	96561207	96520402	96519459	96519473
					RP	96520486	96520402	96519459	96519473
				T	NPT				96519473
					RP				96519473
DME 940-4	Standard	PP	E	G	NPT	96561200	96520391	96519452	96519473
					RP	96520479	96520391	96519452	96519473
				C	NPT		96944511	96741735	96519473
					RP	99710394	96944511	96741735	96519473
				SS	NPT				96519473
					RP	98480372			96519473
				T	NPT				96519473
					RP				96519473
			T	G	NPT				96519473
					RP				96519473
				C	NPT	98775035			96519473
					RP				96519473
				SS	NPT				96519473
					RP				96519473
				T	NPT				96519473
					RP				96519473
DME 940-4	Standard	PP	V	G	NPT	96561201	96520393	96519453	96519473
					RP	96520480	96520393	96519453	96519473
				C	NPT			96741740	96519473
					RP			96741740	96519473
				SS	NPT				96519473
					RP				96519473
				T	NPT				96519473
					RP				96519473

Model	Valves	Materials			Connection inlet	Complete dosing head Pos. 1 + 2 + 3 + 4 + 5 + 6	Valves + diaphragm Pos. 1 + 2 + 3	Valves Pos. 2 + 3	Diaphragm Pos. 1
		Dosing head	Gasket	Valve ball					
DME 940-4	Standard	PV	E	G	NPT	98414834		96741853	96519473
					RP			96741853	96519473
				C	NPT			96741841	96519473
					RP			96741841	96519473
				SS	NPT			96741855	96519473
					RP			96741855	96519473
				T	NPT				96519473
					RP				96519473
			T	G	NPT	97766508	97919265	96748547	96519473
					RP	97915360	97919265	96748547	96519473
				C	NPT		96690562	96690554	96519473
					RP	96690551	96690562	96690554	96519473
				SS	NPT			96741860	96519473
					RP			96741860	96519473
				T	NPT		97713545	96748545	96519473
					RP	97713544	97713545	96748545	96519473
			V	G	NPT	96561202	96520395	96519454	96519473
					RP	96520481	96520395	96519454	96519473
				C	NPT			96741865	96519473
					RP	99874217		96741865	96519473
				SS	NPT			96741868	96519473
					RP			96741868	96519473
				T	NPT				96519473
					RP				96519473
DME 940-4	Standard	SS	E	G	NPT				96519473
					RP				96519473
				C	NPT				96519473
					RP				96519473
				SS	NPT				96519473
					RP	98587963			96519473
				T	NPT				96519473
					RP				96519473
			T	G	NPT				96519473
					RP				96519473
				C	NPT				96519473
					RP				96519473
				SS	NPT		97568699	97571913	96519473
					RP	99062234	97568699	97571913	96519473
				T	NPT				96519473
					RP				96519473
			V	G	NPT				96519473
					RP				96519473
				C	NPT				96519473
					RP				96519473
				SS	NPT	96561203	96520397	96519455	96519473
					RP	96520482	96520397	96519455	96519473
				T	NPT				96519473
					RP				96519473
DME 940-4	Standard	PV	V	Y	NPT			96796910	
					RP			96796910	

DME 60 to 940 l/h

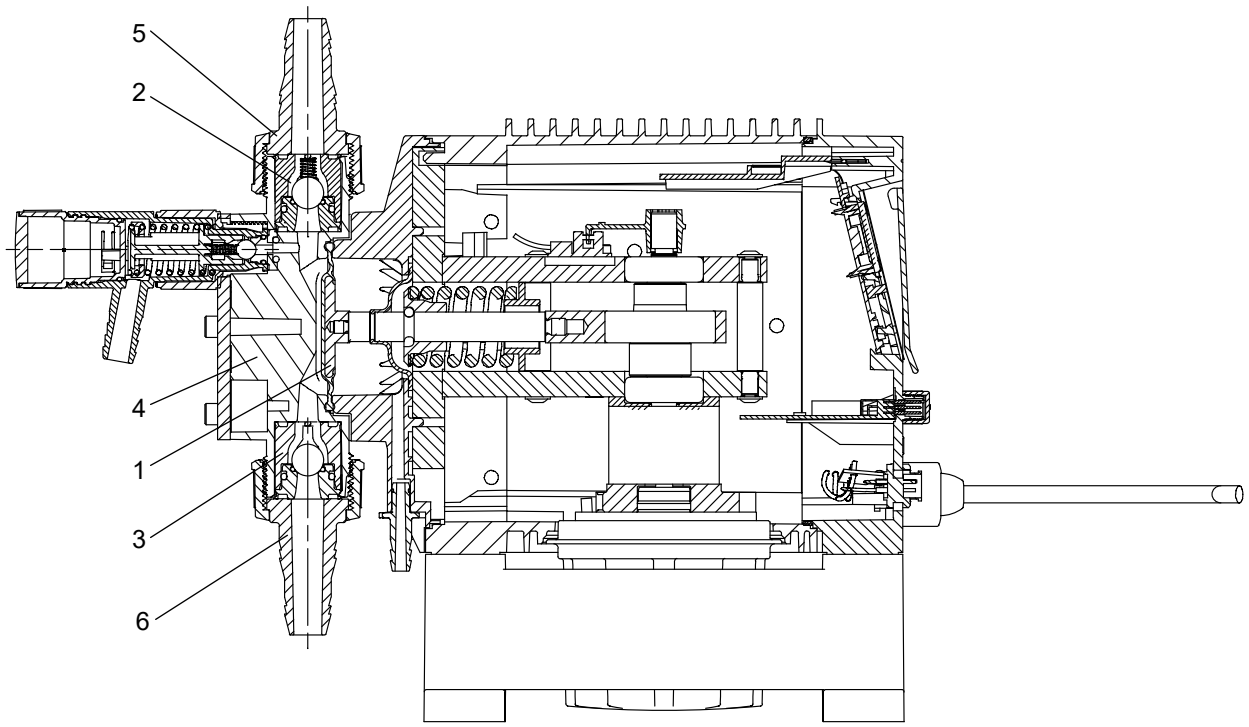

DME (all versions)

Vent valve

Pump size	Materials: Dosing head/gaskets/valve balls	Kit No
DME 2-18 DME 8-10 DME 12-6 DME 19-6 DME 48-3	PP/EPDM/ceramic	*96484194*
	PP/FKM/ceramic	*96484193*
	PVDF/FKM/ceramic	*96484195*
DME 60-10 DME 150-4 DME 375-10 DME 940-4	PP/EPDM/ceramic	*96520488*
	PP/FKM/ceramic	*96520489*
	PVDF/FKM/ceramic	*96520500*
	PVDF/EPDM/ceramic	*96578549*
	PVDF/FKM/SS	*96578570*
	PVDF/EPDM/SS	*96578571*
	PP/EPDM/SS	*96770401*

Balls for inlet and outlet valves

Pump size	Ball material	Amount	Bulk No
DME 60/150	Ceramic	12	*97720573*
	PTFE	12	*97720576*
DME 375/ 940	Glass	12	*99944467*
	Ceramic	12	*97720577*
	PTFE	12	*97720579*
	SS	2	*98096620*
	Hastelloy C	2	*97775079*

Balls for vent valves

Pump size	Dosing Head Material	Ball material	Amount	Bulk No
DME 60/150	PP, PV	C	12	*96561057*
DME 375/940	SS	SS	12	*96530330*

Power cable, DME and DMS

Pump type	Description	Kit No
DME DMS	Schuko	*96497534*
	United States	*96497535*
	Switzerland	*96497536*
	Australia	*96497537*
	United Kingdom	*96497538*
	Japan	*96497539*

Repair parts (DME 375 and 940 l/h)

Description	Part No
Spare, Foot DME	*96751614*
Kit, I&O board	*97753242*
Kit, gear unit, frame back plate, hall sensor, front operation	*97753197*
Kit, gear unit, frame back plate, hall sensor, side operation	*97753198*
Kit, Cabinet for front operation	*97753200*
Kit, Cabinet for side operation	*97753199*
Kit, Front cover B version, front operation	*97753233*
Kit, Front cover AR version, front operation	*97753234*
Kit, Front cover B version, side operation	*97753231*
Kit, Front cover AR version, side operation	*97753232*
Kit, Display, front operation	*97753245*
Kit, Display, side operation	*97753244*
Kit, Driver board	*97753246*
Kit, Motor set	*96751613*
Kit, Back plate DME 375 l/h	*97753247*
Kit, Back plate DME 940 l/h	*97753248*
Retrofit Kit: existing AR & AP versions to be equipped with leakage sensor	*96534443*
Accessory: M12 Splitter / T-Connector: Usage of analog signal + leakage detection	*99904127*

DDI

DDI 209

Maintenance kit

Pump					Valves + diaphragm (2 valves + diaphragm)	Diaphragm	Venting valve	Dosing head	
			Pos.	Standard	2 x 2 + 3	3	1	Head	Head w. flow monitor
				Plus 3	2 x 2 + 3	3	1	2 x 2,3,6	2 x 2,3,6
Model	Version	Materials							
		Head	Gasket	Ball					
DDI 0.4-10	Standard	PP	EPDM	Ceramic	96640194	98337186	98367756	98354149	98164413
		PP	FKM	Ceramic	96688957	98337186	98369884	98354171	98164432
		PVC	EPDM	Ceramic	96636330	98337186	98369911	98354175	98164433
		PVC	FKM	Ceramic	96729364	98337186	98369919	98354176	98164365
		PVC	PTFE	Ceramic	98327521	98337186	98369911	98354179	-
		PVC	PTFE	PTFE	98156956	98337186	98369911	98354213	-
		PVDF	EPDM	Ceramic	98327611	98337186	98369931	98354482	-
		PVDF	FKM	Ceramic	98327618	98337186	98369932	-	-
		PVDF	PTFE	Ceramic	91835866	98337186	98369931	98354554	98162113
		PVDF	PTFE	PTFE	98327625	98337186	98369931	98354555	-
		SS	EPDM	SS	98336647	98337186	98369931	-	-
		SS	FKM	SS	98327670	98337186	98369932	98354632	98365607
		SS	PTFE	SS	98327693	98337186	98369931	98354635	98158883
	Plus 3	PP	EPDM	Ceramic	96688850	98337293	98367756	98354636	98158860
		PP	FKM	Ceramic	96688849	98337293	98369884	98354638	98158748
		PVC	EPDM	Ceramic	91835905	98337293	98369911	98354661	98356006
		PVC	FKM	Ceramic	91835901	98337293	98369919	98354673	98359521
DDI 2.2 - 16 DDI 2.5 - 10 DDI 5.5 - 10	Standard	PP	EPDM	Ceramic	96634415	98337640	98367756	98354771	98354810
		PP	FKM	Ceramic	91836540	98337640	98369884	98354776	98354557
		PVC	EPDM	Ceramic	96643263	98337640	98369911	98354790	98354489
		PVC	FKM	Ceramic	96688816	98337640	98369919	98354802	98368920
		PVC	PTFE	Ceramic	96729545	98337640	98369911	98354807	98368964
		PVC	PTFE	PTFE	95707374	98337640	98369911	-	-
		PVDF	EPDM	Ceramic	98328157	98337640	98369931	98354819	-
		PVDF	FKM	Ceramic	98328174	98337640	98369932	98356000	-
		PVDF	PTFE	Ceramic	96641403	98337640	98369931	98356004	98369021
		PVDF	PTFE	PTFE	98328177	98337640	98369931	-	-
		SS	EPDM	SS	98336665	98337640	98369931	-	-
		SS	FKM	SS	98328183	98337640	98369932	98359526	98369259
		SS	PTFE	SS	98328206	98337640	98369931	98359527	98369275
	Plus 3	PP	EPDM	Ceramic	96688851	98337641	98367756	98157872	98369296
		PP	FKM	Ceramic	91836604	98337644	98369884	98158466	98369309
		PVC	EPDM	Ceramic	96645650	98337641	98369911	98158492	98369354
		PVC	FKM	Ceramic	96641420	98337644	98369919	91835885	98369355
DDI 13,8-4	Standard	PP	EPDM	Ceramic	98337012	98337650	98369933	98369998	98369934
		PP	FKM	Ceramic	96729512	98337650	98369935	98370000	98369937
		PVC	EPDM	Ceramic	98337015	98337650	98369940	98370002	98369939
		PVC	FKM	Ceramic	96656267	98337650	98369962	98370003	98369963
		PVC	PTFE	Ceramic	98337016	98337650	98369964	98370004	-
		PVC	PTFE	PTFE	95715912	98337650	98369964	98370005	-
		PVDF	PTFE	Ceramic	95726369	98337650	98369967	98370007	98369966
		SS	EPDM	SS	98337117	98337650	-	-	-
		SS	FKM	SS	98337163	98337650	98369969	98370006	98369993
		SS	PTFE	SS	98337168	98337650	98369992	98370010	98369994

Pump					Valves + diaphragm (2 valves + diaphragm)	Diaphragm	Venting valve	Dosing head	
								Head	Head w. flow monitor
Model	Version		Pos.	Standard	2 x 2 + 3	3	1	1,2 x 2,3,4	1,2 x 2,3,4,5
				Plus 3	2 x 2 + 3	3	1	2 x 2,3,6	2 x 2,3,6
		Materials							
		Head	Gasket	Ball					
DDI 20-3	Standard	PP	EPDM	Ceramic	*98337012*	*98337650*	*98369933*	*98159567*	*98369371*
		PP	FKM	Ceramic	*96729512*	*98337650*	*98369935*	*98159583*	*98369372*
		PVC	EPDM	Ceramic	*98337015*	*98337650*	*98369940*	*98159585*	*98369374*
		PVC	FKM	Ceramic	*96656267*	*98337650*	*98369962*	*98159589*	*98369380*
		PVC	PTFE	Ceramic	*98337016*	*98337650*	*98369964*	*98159868*	-
		PVC	PTFE	PTFE	*95715912*	*98337650*	*98369964*	*98159820*	-
		PVDF	EPDM	Ceramic	*98337099*	*98337650*	-	*98159863*	-
		PVDF	PTFE	Ceramic	*95726369*	*98337650*	*98369967*	*98162112*	*98369385*
		PVDF	PTFE	PTFE	*91835878*	*98337650*	*98369967*	-	-
		SS	EPDM	SS	*98337117*	*98337650*	-	-	-
		SS	FKM	SS	*98337163*	*98337650*	*98369969*	*98164371*	*98369383*
		SS	PTFE	SS	*98337168*	*98337650*	*98369992*	*98164377*	*98369386*

DDI 209 Standard

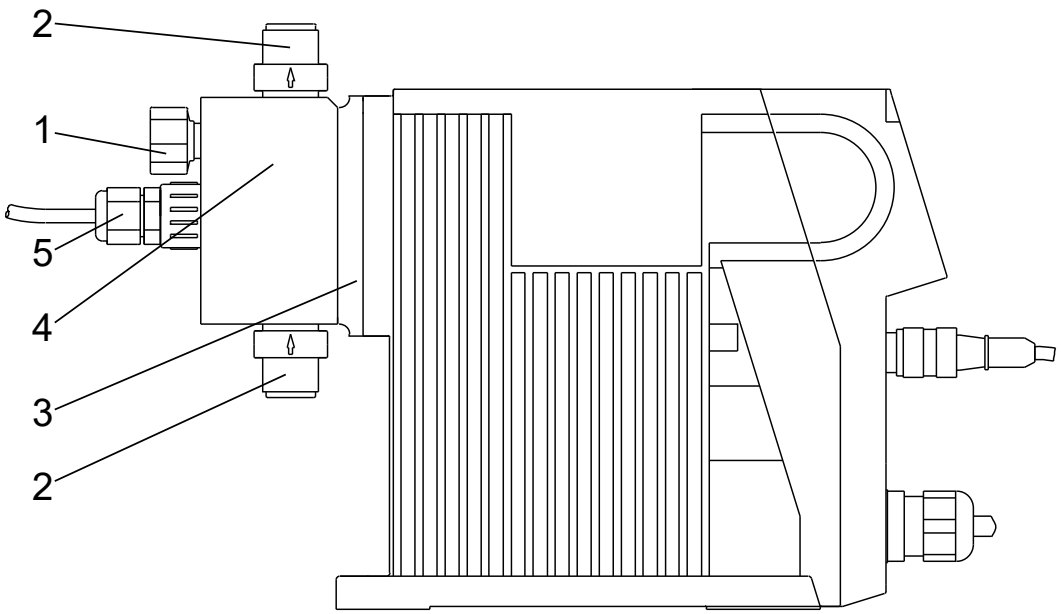

TM056939

DDI 209 Plus 3

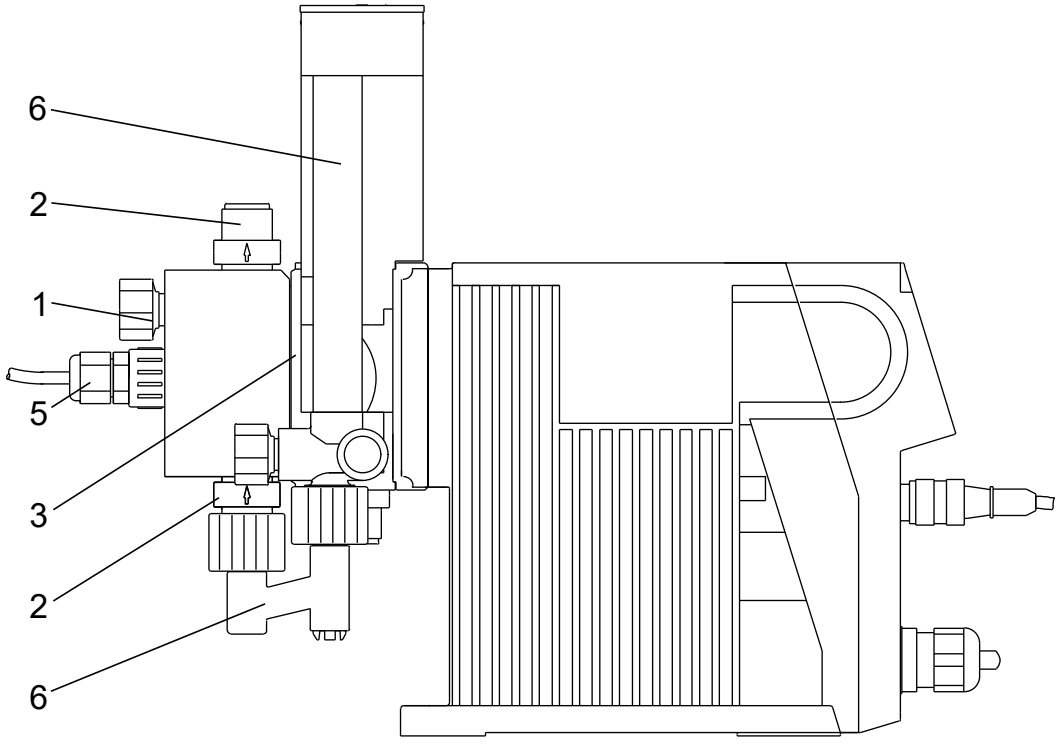

TM056940

Spring loaded valves

Model	Valve size	Material			Product number
		Body	Gasket	Ball	
DDI 0.4 DDI 2.2 DDI 2.5 DDI 5.5	DN4	PVC	EPDM	Ceramic	*98366502*
			FKM	Ceramic	*98366527*
			PTFE	Ceramic	*98366528*
		PP	EPDM	Ceramic	*98366529*
			FKM	Ceramic	*98366541*
		PVDF	PTFE	Ceramic	*98366542*
		Stainless steel (SS)	FKM	SS	*98366544*
			PTFE	SS	*98366545*
DDI 13.8, 20	DN8	PVC	EPDM	Ceramic	*98366551*
			FKM	Ceramic	*98366546*
			PTFE	Ceramic	*98366552*
		PP	EPDM	Ceramic	*98366553*
			FKM	Ceramic	*98366555*
		PVDF	PTFE	Ceramic	*98366557*
		Stainless steel (SS)	FKM	SS	*98366558*
			PTFE	SS	*98366559*

Kits for ClO_2 applications

Model	Version	Material			Kit, valves + diaphragm	Kit, diaphragm
		Body	Gasket	Ball	Product number	Product number
DDI 2.2, 2.5, 5.5	Standard	PVC	FKM	Ceramic	*96729439*	*96729439*
	Plus 3	PVC	FKM	Ceramic	*96688870*	*96688870*

Connection set for DDI 209 (up to 6 l/h)

Info	Kit No
Connection set DN4 PVC 4/6 mm	*91835692*
Connection set DN4 PP 4/6 mm	*91835705*

DDI 222

Maintenance kit

Model	Version	Materials				Product number	
		Valve Body	Gasket	Seat	Ball	Valves + Diaphragm	Diaphragm
						pos. 2 x 2 + 3	pos. 3
DDI 60-10	Std.	1.4571	FKM	FKM	1.4401	96688932 [1]	91836522
DDI 60-10	Std.	1.4571	PTFE	PTFE	1.4401	96688933 [1]	91836522
DDI 60-10	Std.	PP	EPDM	EPDM	PTFE	96688939	91836522
DDI 60-10	Std.	PP	FKM	FKM	Glas	96688938	91836522
DDI 60-10	Std.	PVC	EPDM	EPDM	1.4401	91836617	91836522
DDI 60-10	Std.	PVC	FKM	FKM	Glas	96641808	91836522
DDI 60-10	Std.	PVC	PTFE	PTFE	Ceramic	96688927	91836522
DDI 60-10	Std.	PVC	PTFE	PTFE	PTFE	96688928	91836522
DDI 60-10	Std.	PVDF	PTFE	PTFE	PTFE	96641810	91836522
DDI 60-10	abr.	1.4571	FKM	1.4571	1.4401	96688934 [1]	91836522
DDI 60-10	DLD/abr.	1.4571	FKM	1.4571	1.4401	96688937 [1]	91836521
DDI 60-10	DLD	1.4571	FKM	FKM	1.4401	96688935 [1]	91836521
DDI 60-10	DLD	1.4571	PTFE	PTFE	1.4401	96688936 [1]	91836521
DDI 60-10	DLD	PP	EPDM	EPDM	PTFE	96688941	91836521
DDI 60-10	DLD	PP	FKM	FKM	Glas	96688940	91836521
DDI 60-10	DLD	PVC	EPDM	EPDM	1.4401	96688929	91836521
DDI 60-10	DLD	PVC	FKM	FKM	Glas	91836337	91836521
DDI 60-10	DLD	PVC	PTFE	PTFE	Ceramic	96688930	91836521
DDI 60-10	DLD	PVC	PTFE	PTFE	PTFE	96688931	91836521
DDI 60-10	DLD	PVDF	PTFE	PTFE	PTFE	96688942	91836521
DDI 150-4	Std.	1.4571	FKM	1.4571	1.4401	96688949 [1]	91836524
DDI 150-4	Std.	1.4571	PTFE	1.4571	1.4401	96688950 [1]	91836524
DDI 150-4	Std.	PVC-PP	EPDM	PTFE	1.4401	96641222 [1]	91836524
DDI 150-4	Std.	PVC-PP	EPDM	PTFE	PTFE	96688944 [1]	91836524
DDI 150-4	Std.	PVC-PP	FKM	PTFE	Glas	96634524 [1]	91836524
DDI 150-4	Std.	PVC-PP	PTFE	PTFE	Ceramic	96688943 [1]	91836524
DDI 150-4	Std.	PVC-PP	PTFE	PTFE	PTFE	96729504 [1]	91836524
DDI 150-4	Std.	PVDF	PTFE	PTFE	PTFE	96641811 [1]	91836524
DDI 150-4	DLD	1.4571	FKM	1.4571	1.4401	96688952 [1]	91836523
DDI 150-4	DLD	1.4571	PTFE	1.4571	1.4401	96688953 [1]	91836523
DDI 150-4	DLD	PVC-PP	EPDM	PTFE	1.4401	96688946 [1]	91836523
DDI 150-4	DLD	PVC-PP	EPDM	PTFE	PTFE	96688948 [1]	91836523
DDI 150-4	DLD	PVC-PP	FKM	PTFE	Glas	96688945 [1]	91836523
DDI 150-4	DLD	PVC-PP	PTFE	PTFE	Ceramic	96688947 [1]	91836523
DDI 150-4	DLD	PVC-PP	PTFE	PTFE	PTFE	96729505 [1]	91836523
DDI 150-4	DLD	PVDF	PTFE	PTFE	PTFE	96688956 [1]	91836523
DDI 150-4	abr.	1.4571	FKM	1.4571	1.4401	96688951 [1]	96679802

1 Only with internal valve parts

Std.: Standard

DLD: Diaphragm leakage detection

abr.: Special valve for abrasive liquids

PVC-PP: kits are suitable for pumps with either PVC or PP heads

DDI 222 with flow monitor (dosing head, flow sensor and PTFE O-ring)

Model	Dosing head material	Kit No
		pos. 1
DDI 60-10	PVC	*96688965*
DDI 60-10	PP	*96688967*
DDI 60-10	PVDF	*96688968*
DDI 60-10	Stainless steel (SS)	*96688966*
DDI 150-4	PVC	*96688971*
DDI 150-4	PP	*96688973*
DDI 150-4	PVDF	*96688974*
DDI 150-4	Stainless steel (SS)	*96688972*

Important! These kits do not include check valves.

DDI 222 Electronics boards

Model	Description	Voltage	Kit No
DDI 60-150	Display on the side	110-240 AC	*96688902*
DDI 60-150	Display on the back	110-240 AC	*95721737*
DDI 60-150 with profibus	Display on the side	110-240 AC	*96688904*
DDI 60-150 with profibus	Display on the back	110-240 AC	*95721739*

Cable and connectors

Application		Type	Pins	Coding	Straight/angled	Length	Other	Kit No
Input	Analog contact for remote switch	Plug connector	4	Groove (nut)	Straight	2		*96609014*
						5		*96609016*
						Plug only		*96698715*
					Angled	2		*96693246*
Output	Error relay stroke or pre-empty relay	Plug connector	4	Tappet	Straight	2		*96609017*
						5		*96609019*
						Plug only		*96696198*
					Angled	2		*96698716*
Output	Analog	Plug connector	5	Groove (nut)	Straight	2		*96632921*
						5		*96632922*
						Plug only		*96609031*
					Angled	2		*96699697*
Combined	Flow monitor in analog out	Plug connector	5	Groove (nut)	Straight	Plug only	2 cable entries	*96609030*
Input	(Pre-)empty	Plug connector	4	Groove (nut)	Straight	Plug only		*96698715*
Input	Empty	Flat plug connector	2	Alldos-type	Straight	Plug only	Soldered cable	*96679388*
Input	(Pre-)empty	Flat plug connector	3	Alldos-type	Straight	Plug only	Soldered cable	*96630345*
Adaptor flat-round	(Pre-)empty	Plug connector	4	Groove (nut)	Straight	Plug only		*96635010*
PROFIBUS	Y-connector					Plug only		*96693735*
PROFIBUS	Terminating resistor					Plug only		*96693737*
Mains (model 222)	110-240 VAC	Solenoid valve connector	3	DIN 43650	Angled	Plug only		*96698717*

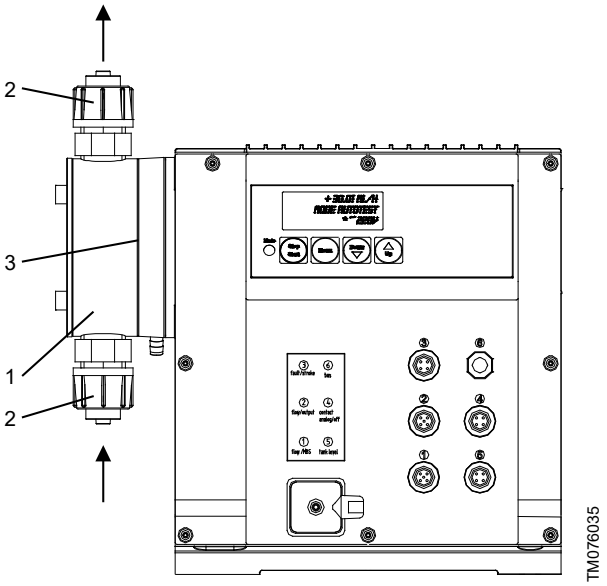
2
3
1
2
TM076035

DMI

DMI 208, 50/60 Hz

Maintenance kit, standard

Pump					Valves + diaphragm (2 valves + diaphragm)	Diaphragm	Venting valve	Head
Model	Version		Pos.	Standard	2 x 2 + 3	3	1	1,2x2,3,4
				Plus 3	2 x 2 + 3	3	1	2x2,3,5
		Materials						
		Head	Gasket	Ball				
DMI 0.3 - 10	Standard	PP	E	C	96640194	98337186	98367756	98354149
		PP	V	C	96688957	98337186	98369884	98354171
		PVC	E	C	96636330	98337186	98369911	98354175
		PVC	V	C	96729364	98337186	98369919	98354176
		PVC	T	C	98327521	98337186	98369911	98354179
		PVC	T	T	98156956	98337186	98369911	98354213
		PV	E	C	98327611	98337186	98369931	98354482
		PV	V	C	98327618	98337186	98369932	n.a.
		PV	T	C	91835866	98337186	98369931	98354554
		PV	T	T	98327625	98337186	98369931	98354555
		SS	E	SS	98336647	98337186	98369931	n.a.
		SS	V	SS	98327670	98337186	98369932	98354632
		SS	T	SS	98327693	98337186	98369931	98354635
	Plus 3	PP	E	C	96688850	98337293	98367756	98354636
		PP	V	C	96688849	98337293	98369884	98354638
		PVC	E	C	91835905	98337293	98369911	98354661
		PVC	V	C	91835901	98337293	98369919	98354673
DMI 0.8 - 16 DMI 1.0 - 10 DMI 1.6 - 10 DMI 3.0 - 10 DMI 3.6 - 16 DMI 4.0 - 8	Standard	PP	E	C	96634415	98337640	98367756	98354771
		PP	V	C	91836540	98337640	98369884	98354776
		PVC	E	C	96643263	98337640	98369911	98354790
		PVC	V	C	96688816	98337640	98369919	98354802
		PVC	T	C	96729545	98337640	98369911	98354807
		PVC	T	T	95707374	98337640	98369911	n.a.
		PV	E	C	98328157	98337640	98369931	98354819
		PV	V	C	98328174	98337640	98369932	98356000
		PV	T	C	96641403	98337640	98369931	98356004
		PV	T	T	98328177	98337640	98369931	n.a.
		SS	E	SS	98336665	98337640	98369931	n.a.
		SS	V	SS	98328183	98337640	98369932	98359526
		SS	T	SS	98328206	98337640	98369931	98359527
	Plus 3	PP	E	C	96688851	98337641	98367756	98157872
		PP	V	C	91836604	98337641	98369884	98158466
		PVC	E	C	96645650	98337641	98369911	98158492
		PVC	V	C	96641420	98337641	98369919	91835885

Pump					Valves + diaphragm (2 valves + diaphragm)	Diaphragm	Venting valve	Head
Model	Version		Pos.	Standard	2 x 2 + 3	3	1	1,2x2,3,4
				Plus 3	2 x 2 + 3	3	1	2x2,3,5
		Materials						
		Head	Gasket	Ball				
DMI 5.0 - 6 DMI 6.0 - 8	Standard	PP	E	C	91836371	98337645	98367756	98158701
		PP	V	C	96641801	98337645	98369884	98158705
		PVC	E	C	91835873	98337645	98369911	98158709
		PVC	V	C	96688818	98337645	98369919	98158742
		PVC	T	C	98328553	98337645	98369911	98158747
		PVC	T	T	98328558	98337645	98369911	n.a.
		PV	E	C	98330321	98337645	98369931	98158777
		PV	V	C	98330327	98337645	98369932	98158827
		PV	T	C	91835874	98337645	98369931	98158858
		PV	T	T	98330576	98337645	98369931	n.a.
		SS	E	SS	98336681	98337645	98369931	n.a.
		SS	V	SS	98330804	98337645	98369932	98158887
		SS	T	SS	98330809	98337645	98369931	98158889
	Plus 3	PP	E	C	96688852	98337647	98367756	98158911
		PP	V	C	91835908	98337647	98369884	98158912
		PVC	E	C	91835907	98337647	98369911	98159549
		PVC	V	C	91835902	98337647	98369919	98159565
DMI 9.0 - 6	Standard	PP	E	C	98337012	98337650	98369933	98369998
		PP	V	C	96729512	98337650	98369935	98370000
		PVC	E	C	98337015	98337650	98369940	98370002
		PVC	V	C	96656267	98337650	98369962	98370003
		PVC	T	C	98337016	98337650	98369964	98370004
		PVC	T	T	95715912	98337650	98369964	98370005
		PV	T	C	95726369	98337650	98369967	98370007
		SS	E	SS	98337117	98337650	n.a.	n.a.
		SS	V	SS	98337163	98337650	98369969	98370006
		SS	T	SS	98337168	98337650	98369992	98370010
DMI 14 - 4 DMI 18 - 3.5	Standard	PP	E	C	98337012	98337650	98369933	98159567
		PP	V	C	96729512	98337650	98369935	98159583
		PVC	E	C	98337015	98337650	98369940	98159585
		PVC	V	C	96656267	98337650	98369962	98159589
		PVC	T	C	98337016	98337650	98369964	98159868
		PVC	T	T	95715912	98337650	98369964	98159820
		PV	E	C	98337099	98337650	n.a.	98159863
		PV	T	C	95726369	98337650	98369967	98162112
		PV	T	T	91835878	98337650	98369967	n.a.
		SS	E	SS	98337117	98337650	n.a.	n.a.
		SS	V	SS	98337163	98337650	98369969	98164371
		SS	T	SS	98337168	98337650	98369992	98164377

DMI 208 standard

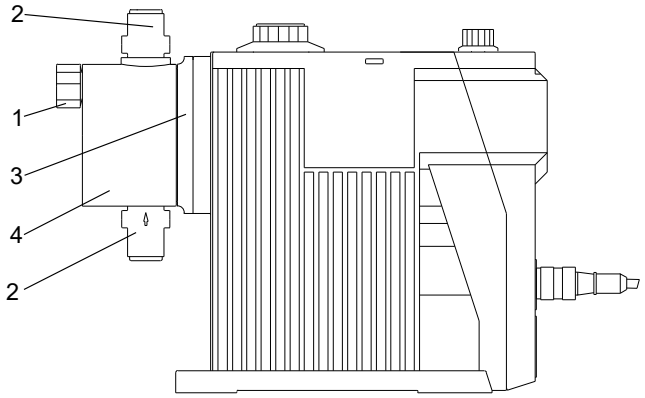

TM056943

DMI 208 Auto deaeration head

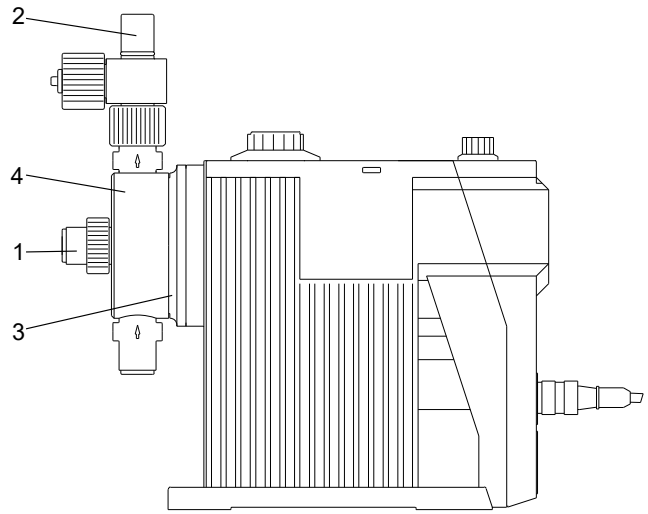

TM056941

DMI 208 plus 3

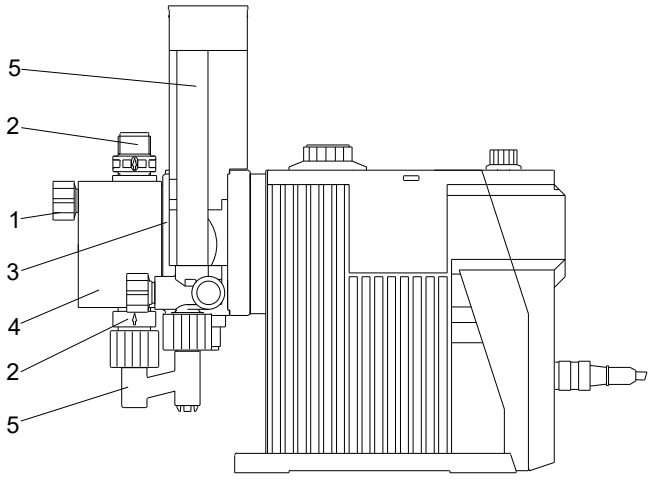

TM056942

Cable and connectors

Application		Type	Pins	Coding	Straight/angled	Cable length	Other	Kit No
Input	Analog contact for remote switch	Plug connector	4	Groove (nut)	Straight	2		96609014
						5		96609016
						Plug only		96698715
					Angled	2		96693246
Output	Error relay stroke or pre-empty relay	Plug connector	4	Tappet	Straight	2		96609017
						5		96609019
						Plug only		96696198
					Angled	2		96698716
Input	Empty	Flat plug connector	2	Alldos-type	Straight	Plug only	Soldered cable	96679388
Input	(Pre-)empty	Flat plug connector	3	Alldos-type	Straight	Plug only	Soldered cable	96630345
Adaptor flat-round	(Pre-)empty	Plug connector	4	Groove (nut)	Straight	Plug only		96635010

Kits for ClO_2 applications (diaphragm material: FKM)

Model	Version	Material			Valves + Diaphragm	Diaphragm
		Body	Gasket	Ball		
DMI 0.8, 1.0, 1.6, 3.0, 3.6, 4.0	Standard	PVC	V	C	96729439	98369260
	Plus 3	PVC	V	C	96688870	98369301
DMI 5.0, 6.0	Standard	PVC	V	C	96688919	98369305
	Plus 3	PVC	V	C	96688918	98369306

Spring loaded valves

Kit includes 1 x spring loaded valve for discharge side + 1 x standard valve

Model	Valve size	Material			Product number
		Body	Gaskets	Ball	
DMI 0.3 - 6.0	DN4	PVC	EPDM	Ceramic	98366502
			FKM	Ceramic	98366527
			PTFE	Ceramic	98366528
		PP	EPDM	Ceramic	98366529
			FKM	Ceramic	98366541
		PVDF	PTFE	Ceramic	98366542
		Stainless steel (SS)	FKM	Stainless steel (SS)	98366544
			PTFE	Stainless steel (SS)	98366545
DMI 9.0 DMI 14.0 DMI 18.0	DN8	PVC	EPDM	Ceramic	98366551
			FKM	Ceramic	98366546
			PTFE	Ceramic	98366552
		PP	EPDM	Ceramic	98366553
			FKM	Ceramic	98366555
		PVDF	PTFE	Ceramic	98366557
		Stainless steel (SS)	FKM	Stainless steel (SS)	98366558
			PTFE	Stainless steel (SS)	98366559

DMI 208 Unidos, maintenance kit

Model	Capacity	Version	Valve	Ball	O-ring	Kit No
			PVDF	PTFE	PTFE	
UNIDOS	0.8, 1, 1.6, 3, 4	W5	X	X	X	96688824
		W10	X	X	X	96688825
		W20	X	X	X	96688826

Connection set for DMI 208 (up to 6 l/h)

Info	Kit No
Connection set DN4 PVC 4/6 mm	91835692
Connection set DN4 PP 4/6 mm	91835705

DMH

DMH 1 x 115-240V, 50/60 Hz; 3 x 240/400V, 50Hz

Model 251 and 252, DN size 8

Nominal capacity [l/h]	Materials			Kit, maintenance [1]	1 valve (standard)	1 valve (spring-loaded) 0.8 bar	Kit diaphragm		Kit dosing head	
	Head / valve body	Gaskets	Balls				Standard	DLD	Standard	DLD
All	SS	PTFE	SS	98807236	98798546	On req.	99145999	98736902	98961637	98837940
	SS coated	PTFE	Ceramic	On req.	On req.	On req.	99145999	98736902	On req.	On req.
	Alloy C-4	PTFE	Alloy C-4	98807232	98798552	On req.	99145999	98736902	98961638	98837942
All capacities at 25 bar	SS	FKM	SS	98807234	98798547	On req.	99145999	98736902	On req.	On req.
All capacities below 16 bar	PP	EPDM	PTFE	98803615	98803612	On req.	99145999	98736902	98961634	98837941
	PP	FKM	Ceramic	98803618	98803600	On req.	99145999	98736902	98961634	98837941
	PP	EPDM	Ceramic	98803622	98798553	On req.	99145999	98736902	98961634	98837941
	PP	EPDM	SS	98803623	98803597	On req.	99145999	98736902	98961634	98837941
	PVDF	PTFE	Ceramic	98807230	99042682	On req.	99145999	98736902	98961636	98837939
	PVDF	PTFE	PTFE	98807231	99042694	On req.	99145999	98736902	98961636	98837939
	PVC	EPDM	Ceramic	On req.	98798550	On req.	99145999	98736902	98961635	98837938
	PVC	EPDM	SS	91836525	98798541	On req.	99145999	98736902	98961635	98837938
	PVC	PTFE	PTFE	95724883	98798545	On req.	99145999	98736902	98961635	98837938
	PVC	FKM	Ceramic	96688994	98798542	On req.	99145999	98736902	98961635	98837938
	PVC	FKM	SS	On req.	98798543	On req.	99145999	98736902	98961635	98837938
	PVC	EPDM	PTFE	On req.	98798548	On req.	99145999	98736902	98961635	98837938
	PVC	PTFE	SS	On req.	On req.	On req.	99145999	98736902	98961635	98837938
	SS	FKM	SS	98807237	98798547	On req.	99145999	98736902	On req.	On req.

[1] Kit, maintenance may contain single parts or complete valve, depending on size and material.

Model 253, DN size 20

Nominal capacity [l/h]	Materials			Kit, maintenance [1]	1 valve (standard)	1 valve (spring-loaded) 0.6 bar	Kit diaphragm		Kit dosing head	
	Head / valve body	Gaskets	Balls				Standard	DLD	Standard	DLD
21, 43, 67, 83, 100	PP	EPDM	PTFE	96375327	98828458	98863249	99146000	98736903	98961639	98837934
	PP	FKM	Glass	91836421	98828459	98863250	99146000	98736903	98961639	98837934
	PVDF	PTFE	PTFE	On req.	98828464	98863254	99146000	98736903	98961642	98837936
	PVC	EPDM	Ceramic	On req.	98794843		99146000	98736903	98961641	98837935
	PVC	EPDM	SS	91835851	98828456	98863247	99146000	98736903	98961641	98837935
	PVC	EPDM	PTFE	96375327	98828468	98863252	99146000	98736903	98961641	98837935
	PVC	PTFE	Ceramic	On req.	98828469	98863253	99146000	98736903	98961641	98837935
	PVC	PTFE	PTFE	On req.	98802208		99146000	98736903	98961641	98837935
	PVC	FKM	Glass	91836421	98828457	98863248	99146000	98736903	98961641	98837935
	PVC	FKM	SS	98776778	98828463	98863257	99146000	98736903	98961641	98837935
	SS	EPDM	SS	98981388	98812756		99146000	98736903	98961643	98837937
	SS	PTFE	SS	96688913	98812758	98863256	99146000	98736903	98961643	98837937
	SS	FKM	SS	96375328	98828465	98863255	99146000	98736903	98961643	98837937

[1] Kit, maintenance may contain single parts or complete valve, depending on size and material.

Model 254, DN size 20

Nominal capacity [l/h]	Materials			Kit, maintenance [1]	1 valve (standard)	1 valve (spring-loaded) 0.6 bar	Kit diaphragm		Kit dosing head	
	Head / valve body	Gaskets	Balls				Standard	DLD	Standard	DLD
50, 102, 143, 175, 213, 291, 97, 136, 166, 202, 276	PP	EPDM	PTFE	96375329	98828458	98863249	99145959	98736904	98961644	On req.
	PP	PTFE	PTFE	On req.	98828467		99145959	98736904	98961644	On req.
	PP	FKM	Glass	91835933	98828459	98863250	99145959	98736904	98961644	On req.
	PVDF	PTFE	PTFE	91835935	98828464	98863254	99145959	98736904	98961645	On req.
	PVC	EPDM	SS	91835852	98828456	98863247	99145959	98736904	98795105	98795108
	PVC	EPDM	PTFE	96375329	98828468	98863252	99145959	98736904	98795105	98795108
	PVC	PTFE	PTFE	On req.	98802208		99145959	98736904	98795105	98795108
	PVC	FKM	Glass	91835933	98828457	98863248	99145959	98736904	98795105	98795108
	PVC	FKM	SS	On req.	98828463	98863257	99145959	98736904	98795105	98795108
	SS	EPDM	SS	96689004	98812756		99145959	98736904	98795106	98795109
	SS	PTFE	SS	96697502	98812758	98863256	99145959	98736904	98795106	98795109
	SS	FKM	SS	96375330	98828465	98863255	99145959	98736904	98795106	98795109
	SS coated	PTFE	Ceramic	On req.	98812738		99145959	98736904	On req.	On req.

1 Kit, maintenance may contain single parts or complete valve, depending on size and material.

Model 255, DN size 20

Nominal capacity [l/h]	Materials			Kit, maintenance [1]	1 valve (standard)	1 valve (spring-loaded) 0.6 bar	Kit diaphragm		Kit dosing head	
	Head / valve body	Gaskets	Balls				Standard	DLD	Standard	DLD
194, 270, 332, 403	PP	EPDM	PTFE	On req.	98828458	98863249	99146002	98736905	98961646	98974158
	PP	FKM	Glass	On req.	98828459	98863250	99146002	98736905	98961646	98974158
	PVDF	PTFE	PTFE	On req.	98828464	98863254	99146002	98736905	98961648	98974171
	PVC	EPDM	Ceramic	On req.	98794843	-	99146002	98736905	98961647	98974159
	PVC	EPDM	SS	On req.	98828456	98863247	99146002	98736905	98961647	98974159
	PVC	EPDM	PTFE	96375331	98828468	98863252	99146002	98736905	98961647	98974159
	PVC	PTFE	PTFE	On req.	98802208	-	99146002	98736905	98961647	98974159
	PVC	FKM	Glass	96689016	98828457	98863248	99146002	98736905	98961647	98974159
	PVC	FKM	SS	On req.	98828463	98863257	99146002	98736905	98961647	98974159
	SS	EPDM	SS	98981389	98812756	-	99146002	98736905	98961650	98974160
	SS	PTFE	SS	98981390	98812758	98863256	99146002	98736905	98961650	98974160
	SS	FKM	SS	96375332	98828465	98863255	99146002	98736905	98961650	98974160
	Alloy C-4	PTFE	Alloy C-4	96688847	98812736	98863258	99146002	98736905	98961649	On req.

1 Kit, maintenance may contain single parts or complete valve, depending on size and material.

Model 255, DN size 20/32

Nominal capacity [l/h]	Materials			Kit, maintenance [1]	1 valve (inlet side)	1 valve (outlet side)	Kit diaphragm		Kit dosing head	
	Head / valve body	Gaskets	Balls				Standard	DLD	Standard	DLD
484, 540, 550	PP	EPDM	PTFE	On req.	98926659	98828458	99146002	98736905	98961646	98974158
	PP	FKM	Glass	On req.	98926660	98828459	99146002	98736905	98961646	98974158
	PVDF	PTFE	PTFE	91835939	98926674	98828464	99146002	98736905	98961648	98974171
	PVC	EPDM	SS	98734766	98926671	98828456	99146002	98736905	98961647	98974159
	PVC	FKM	Glass	91836545	98926672	98828457	99146002	98736905	98961647	98974159
	SS	EPDM	SS	98032805	98926676	98812756	99146002	98736905	98961650	98974160
	SS	PTFE	SS	98032806	98926677	98812758	99146002	98736905	98961650	98974160
	SS	FKM	SS	96375334	98926678	98828465	99146002	98736905	98961650	98974160
	Alloy C-4	PTFE	Alloy C-4	On req.	On req.	98812736	99146002	98736905	98961649	On req.

1 For DN 32 valves as well as all SS and Alloy C-4 valves the kit contains only inner valve parts.

Model 257, DN size 32

Nominal capacity [l/h]	Materials			Kit, maintenance [1]	1 valve (inlet side)	1 valve (outlet side)	1 valve (spring-loaded) 0.6 bar	Kit diaphragm		Kit dosing head	
	Head / valve body	Gaskets	Balls					Standard	DLD	Standard	DLD
220, 440, 575, 750, 770, 880, 1150, 1500	PP	EPDM	Glass	98812530	98926686	98927603	-	99146013	98736906	98961661	98974154
	PP	EPDM	SS	98812529	98926687	98927604	On req.	99146013	98736906	98961661	98974154
	PP	FKM	Glass	98812528	98926679	98927605	On req.	99146013	98736906	98961661	98974154
	PVDF	PTFE	PTFE	98812525	98926682	98927608	-	99146013	98736906	98961663	98974156
	PVC	EPDM	SS	98734768	98926680	98927606	-	99146013	98736906	98961662	98974155
	PVC	FKM	Glass	98812527	98926681	98927607	On req.	99146013	98736906	98961662	98974155
	SS	EPDM	SS	98812524	98926683	98927609	-	99146013	98736906	98961664	98974157
	SS	PTFE	SS	98812523	98926684	98927610	-	99146013	98736906	98961664	98974157
	SS	FKM	SS	98812489	98926685	98927611	On req.	99146013	98736906	98961664	98974157

1 Kit, maintenance may contain single parts or complete valve, depending on size and material.

Model 280, DN size 4

Nominal capacity [l/h]	Materials			Kit, maintenance [1]	1 valve (spring-loaded) 0.05 bar	Kit diaphragm		Kit dosing head	
	Head / valve body	Gaskets	Balls			Standard	DLD	Standard	DLD
1.3, 2.2, 2.5, 3.3	SS	EPDM	Ceramic	99054883	98725116	99146014	98736907	98961665	On req.
	SS	PTFE	Ceramic	99054884	98725118	99146014	98736907	98961665	On req.
	SS	FKM	Ceramic	99054885	98725117	99146014	98736907	98961665	On req.

1 Kit, maintenance may contain single parts or complete valve, depending on size and material.

Model 281, DN size 8

Nominal capacity [l/h]	Materials			Kit, maintenance [1]	1 valve (spring-loaded) 0.05 bar	Kit diaphragm		Kit dosing head	
	Head / valve body	Gaskets	Balls			Standard	DLD	Standard	DLD
2, 4.2, 6.4, 8, 9.6	SS	PTFE	SS	98981411	98742209	99146015	98736908	98793708	98793709
	SS	FKM	SS	99054872	98742221	99146015	98736908	98793708	98793709
	Alloy C-4	PTFE	Alloy C-4	96688853	98736910	99146015	98736908	98793707	On req.

1 Kit, maintenance may contain single parts or complete valve, depending on size and material.

Model 283, DN size 20

Nominal capacity [l/h]	Materials			Kit, maintenance [1]	1 valve (spring-loaded) 0.05 bar	Kit diaphragm		Kit dosing head	
	Head / valve body	Gaskets	Balls			Standard	DLD	Standard	DLD
10, 19, 27, 33, 40, 55	SS	PTFE	SS	*99054870*	*98733078*	*99146016*	*98736909*	*98963144*	On req.
	SS	FKM	SS	*99054871*	*98733079*	*99146016*	*98736909*	*98963144*	On req.
	SS coated	PTFE	Ceramic	On req.	*98733080*	*99146016*	*98736909*	On req.	On req.
	Alloy C-4	PTFE	Alloy C-4	*96689007*	*98733077*	*99146016*	*98736909*	*98963143*	On req.

1 Kit, maintenance may contain single parts or complete valve, depending on size and material.

Model 285, DN size 20

Nominal capacity [l/h]	Materials			Kit, maintenance [1]	1 valve (spring-loaded) 0.05 bar	Kit diaphragm		Kit dosing head	
	Head / valve body	Gaskets	Balls			Standard	DLD	Standard	DLD
20, 40, 52, 70, 80, 105	SS	PTFE	SS	*99054870*	*98733078*	*99146016*	*98736909*	*98963144*	On req.
	SS	FKM	SS	*99054871*	*98733079*	*99146016*	*98736909*	*98963144*	On req.
	Alloy C-4	PTFE	Alloy C-4	*96689007*	*98733077*	*99146016*	*98736909*	*98963143*	On req.

1 Kit, maintenance may contain single parts or complete valve, depending on size and material.

Model 286, DN size 20

Nominal capacity [l/h]	Materials			Kit, maintenance [1]	1 valve (standard)	Kit diaphragm		Kit dosing head	
	Head / valve body	Gaskets	Balls			Standard	DLD	Standard	DLD
85, 111, 170, 222	SS	EPDM	SS	*98981412*	*98812740*	*99145959*	*98736904*	*98963145*	On req.
	SS	PTFE	SS	*99054886*	*98812752*	*99145959*	*98736904*	*98963145*	On req.
	SS	FKM	SS	*99054887*	*98812753*	*99145959*	*98736904*	*98963145*	On req.
	SS coated	PTFE	Ceramic	On req.	On req.	*99145959*	*98736904*	On req.	On req.
	Alloy C-4	PTFE	Alloy C-4	On req.	*98812739*	*99145959*	*98736904*	On req.	On req.

1 Kit, maintenance may contain single parts or complete valve, depending on size and material.

Model 287, DN size 8

Nominal capacity [l/h]	Materials			Kit, maintenance [1]	1 valve (spring-loaded) 0.05 bar	Kit diaphragm		Kit dosing head	
	Head / valve body	Gaskets	Balls			Standard	DLD	Standard	DLD
9, 18, 23, 31, 36, 50	SS	PTFE	SS	*99054888*	*98742209*	*99145956*	*98736922*	*98963146*	On req.
	SS	FKM	SS	*99054890*	*98742221*	*99145956*	*98736922*	*98963146*	On req.
	SS	EPDM	SS	*99145980*	*98742222*	*99145956*	*98736922*	*98963146*	On req.

1 Kit, maintenance may contain single parts or complete valve, depending on size and material.

Model 288, DN size 8

Nominal capacity [l/h]	Materials			Kit, maintenance [1]	1 valve (spring-loaded) 0.05 bar	Kit diaphragm		Kit dosing head	
	Head / valve body	Gaskets	Balls			Standard	DLD	Standard	DLD
3.3, 7.5, 10, 13, 15, 21	SS	EPDM	SS	*98981414*	*98742222*	*99145956*	*98736922*	*98963148*	On req.
	SS	PTFE	SS	*99057329*	*98742209*	*99145956*	*98736922*	*98963148*	On req.
	SS	FKM	SS	*99057330*	*98742221*	*99145956*	*98736922*	*98963148*	On req.

[1] Kit, maintenance may contain single parts or complete valve, depending on size and material.

DMH lubricant kits

The kits include maintenance parts like gaskets, oil filter etc.

Model	Oil type	One dosing head		Two dosing heads	
		Approx. quantity [l]	Kit No	Approx. quantity [l]	Kit No
251	Paraffinum	1.3	*98683954*	1.3	*98683954*
252, 10 bar	Paraffinum	1.3	*98683954*	1.3	*98683954*
252, 16 bar	DHG 68	1.3	*98683955*	1.3	*98683955*
253	DHG 68	1.3	*98683955*	1.3	*98683955*
254	DHG 68	3.5	*98683956*	4.5	*98683957*
255	DHG 68	3.5	*98683956*	4.5	*98683957*
257	DHG 68	5.0	*98683958*	7.5	*98683959*
280	DHG 68	1.3	*98683954*	1.3	*98683954*
281	DHG 68	1.3	*98683954*	1.3	*98683954*
283	DHG 68	3.5	*98683956*	4.5	*98683957*
285	DHG 68	5.0	*98683958*	7.5	*98683959*
286	DHG 68	5.0	*98683958*	7.5	*98683959*
287	DHG 68	5.0	*98683958*	7.5	*98683959*
288	DHG 68	3.5	*98683956*	4.5	*98683957*

DMH

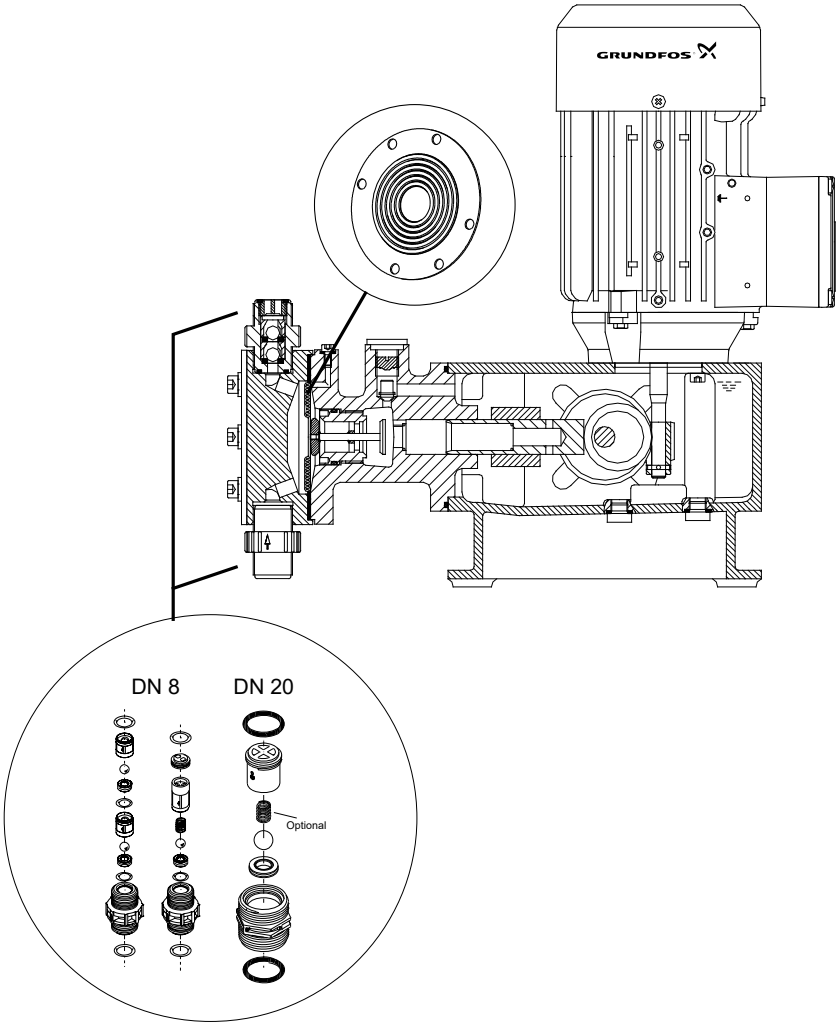

TM067972

DMX

DMX, 1 x 115-240V, 50/60Hz; 3 x 230/400V, 50Hz

Model 221, DN size 8

Nominal capacity [l/h]	Materials			Kit, maintenance [1]	1 valve (standard)	1 valve (spring-loaded)		Kit diaphragm	Kit dosing head
	Head / valve body	Gaskets	Balls			0.05 bar	0.8 bar		
04,8,16	PP	EPDM	PTFE	96375311	98803612	On req.	On req.	99145975	98981417
	PP	FKM	Ceramic	99079171	98803600	On req.	On req.	99145975	98981417
	PVDF	PTFE	PTFE	99079082	99042694	-	On req.	99145975	99040498
	PVC	EPDM	SS	99079250	98798541	-	On req.	99145975	98808112
	PVC	FKM	Ceramic	99079236	98798542	On req.	On req.	99145975	98808112
	PVC	FKM	SS	99079170	98798543	-	On req.	99145975	98808112
	PVC	EPDM	PTFE	99079172	98798548	-	On req.	99145975	98808112
	PVC	PTFE	Ceramic	99079183	98798549	-	-	99145975	98808112
	PVC	PTFE	PTFE	99079240	98798545	On req.	On req.	99145975	98808112
	SS	PTFE	SS	98969006	98798546	On req.	On req.	99145975	98969003
	SS	FKM	SS	99079252	98798547	-	On req.	99145975	98969003
07,14,27	PP	EPDM	PTFE	96617129	98803612	On req.	On req.	99145976	98981419
	PP	FKM	Ceramic	99079185	98803600	On req.	On req.	99145976	98981419
	PP	FKM	PTFE	On req.	98803599	-	-	99145976	98981419
	PVDF	PTFE	PTFE	99079085	99042694	-	On req.	99145976	99040499
	PVDF	PTFE	Ceramic	99079048	99042682	-	-	99145976	99040499
	PVC	EPDM	SS	99079251	98798541	-	On req.	99145976	98808114
	PVC	PTFE	PTFE	91835951	98798545	On req.	On req.	99145976	98808114
	PVC	FKM	Ceramic	99079184	98798542	On req.	On req.	99145976	98808114
	PVC	EPDM	Ceramic	98178426	98798550	On req.	On req.	99145976	98808114
	PVC	EPDM	PTFE	On req.	98798548	-	On req.	99145976	98808114
	PVC	PTFE	Ceramic	91835950	98798549	-	-	99145976	98808114
	PVC	FKM	SS	99079188	98798543	-	On req.	99145976	98808114
	SS	PTFE	SS	98969007	98798546	On req.	On req.	99145976	98969001
	SS	FKM	SS	99079284	98798547	-	On req.	99145976	98969001
09,18,35	PP	EPDM	SS	On req.	98803597	-	-	99145978	98981420
	PP	EPDM	PTFE	On req.	98803612	On req.	On req.	99145978	98981420
	PP	FKM	Ceramic	99079194	98803600	On req.	On req.	99145978	98981420
	PVDF	PTFE	Ceramic	99079050	99042682	-	-	99145978	99040450
	PVDF	PTFE	PTFE	99079076	99042694	-	On req.	99145978	99040450
	PVC	EPDM	Ceramic	99079244	98798550	On req.	On req.	99145978	98808115
	PVC	EPDM	SS	99079249	98798541	-	On req.	99145978	98808115
	PVC	FKM	Ceramic	99079237	98798542	On req.	On req.	99145978	98808115
	PVC	EPDM	PTFE	95729862	98798548	-	On req.	99145978	98808115
	PVC	PTFE	Ceramic	99079246	98798549	-	-	99145978	98808115
	PVC	PTFE	PTFE	91835954	98798545	On req.	On req.	99145978	98808115
	PVC	FKM	SS	99079196	98798543	-	On req.	99145978	98808115
	SS	PTFE	SS	98969008	98798546	On req.	On req.	99145978	98969000
	SS	FKM	SS	99079285	98798547	-	On req.	99145978	98969000

Nominal capacity [l/h]	Materials			Kit, maintenance[1]	1 valve (standard)	1 valve (spring-loaded)		Kit diaphragm	Kit dosing head
	Head / valve body	Gaskets	Balls			0.05 bar	0.8 bar		
12,26,50	PP	EPDM	SS	On req.	98803597	-	-	99145979	98981421
	PP	EPDM	PTFE	96375313	98803612	On- req.	On req.	99145979	98981421
	PP	PTFE	PTFE	On req.	98803596	-	-	99145979	98981421
	PP	FKM	Ceramic	99079214	98803600	On req.	On req.	99145979	98981421
	PP	FKM	PTFE	On req.	98803599	-	-	99145979	98981421
	PVDF	PTFE	PTFE	99079078	99042694	-	On req.	99145979	99040501
	PVDF	PTFE	Ceramic	99079081	99042682	-	-	99145979	99040501
	PVC	EPDM	SS	99079243	98798541	-	On req.	99145979	98808116
	PVC	EPDM	PTFE	96625626	98798548	-	On req.	99145979	98808116
	PVC	PTFE	PTFE	96645652	98798545	On req.	On req.	99145979	98808116
	PVC	FKM	Ceramic	99079233	98798542	On req.	On req.	99145979	98808116
	PVC	EPDM	Ceramic	On req.	98798550	On req.	On req.	99145979	98808116
	PVC	PTFE	Ceramic	91835958	98798549	-	-	99145979	98808116
	PVC	FKM	SS	99079234	98798543	-	On req.	99145979	98808116
	SS	PTFE	SS	98969009	98798546	On req.	On req.	99145979	98968995
	SS	FKM	SS	99079286	98798547	-	On req.	99145979	98968995

[1] Kit, maintenance may contain single parts or complete valve, depending on size and material.

Model 221, DN size 20

Nominal capacity [l/h]	Materials			Kit, maintenance[1]	1 valve (standard)	1 valve (spring-loaded) 0.6 bar	Kit diaphragm	Kit dosing head
	Head / valve body	Gaskets	Balls					
17,39,75	PP	EPDM	SS	On req.	98828466	-	99145995	98981423
	PP	EPDM	PTFE	On req.	98828458	98863249	99145995	98981423
	PP	PTFE	PTFE	On req.	98828467	-	99145995	98981423
	PP	FKM	Glass	99070223	98828459	98863250	99145995	98981423
	PVDF	PTFE	PTFE	99070226	98828464	98863254	99145995	99018339
	PVC	EPDM	SS	99069631	98828456	98863247	99145995	98808117
	PVC	FKM	Glass	99069632	98828457	98863248	99145995	98808117
	PVC	EPDM	Ceramic	On req.	98794843	-	99145995	98808117
	PVC	EPDM	PTFE	On req.	98828468	98863252	99145995	98808117
	PVC	PTFE	Ceramic	On req.	98828469	98863253	99145995	98808117
	PVC	PTFE	PTFE	On req.	98802208	-	99145995	98808117
	PVC	FKM	Ceramic	99070224	98828462	-	99145995	98808117
	PVC	FKM	SS	99070225	98828463	98863257	99145995	98808117
	SS	FKM	SS	98969010	98828465	98863255	99145995	98968996

Nominal capacity [l/h]	Materials			Kit, maintenance [1]	1 valve (standard)	1 valve (spring-loaded) 0.6 bar	Kit diaphragm	Kit dosing head
	Head / valve body	Gaskets	Balls					
25,60,115	PP	EPDM	Ceramic	99070260	98812760	-	99145996	98981424
	PP	EPDM	SS	On req.	98828466	-	99145996	98981424
	PP	EPDM	PTFE	On req.	98828458	98863249	99145996	98981424
	PP	FKM	Glass	99070261	98828459	98863250	99145996	98981424
	PVDF	PTFE	PTFE	99070259	98828464	98863254	99145996	99018340
	PVDF	PTFE	Ceramic	On req.	98812759	-	99145996	99018340
	PVC	EPDM	SS	99070257	98828456	98863247	99145996	98808118
	PVC	EPDM	PTFE	On req.	98828468	98863252	99145996	98808118
	PVC	FKM	Glass	99070258	98828457	98863248	99145996	98808118
	PVC	EPDM	Ceramic	On req.	98794843	-	99145996	98808118
	PVC	PTFE	Ceramic	On req.	98828469	98863253	99145996	98808118
	PVC	PTFE	PTFE	On req.	98802208	-	99145996	98808118
	PVC	FKM	Ceramic	99070262	98828462	-	99145996	98808118
	PVC	FKM	SS	99070263	98828463	98863257	99145996	98808118
	SS	PTFE	SS	98969011	98812758	98863256	99145996	98968997
	SS	FKM	SS	98969013	98828465	98863255	99145996	98968997

[1] Kit, maintenance may contain single parts or complete valve, depending on size and material.

Model 226, DN size 20

Nominal capacity [l/h]	Materials			Kit, maintenance [1]	1 valve (standard)	1 valve (spring-loaded) 0.6 bar	Kit diaphragm	Kit dosing head
	Head / valve body	Gaskets	Balls					
24, 52, 100, 142, 67, 132, 190	PP	EPDM	PTFE	98965726	98828458	98863249	98922727	98981423
	PP	PTFE	PTFE	98965727	98828467	-	98922727	98981423
	PP	FKM	Glass	98827346	98828459	98863250	98922727	98981423
	PP	EPDM	Ceramic	98827347	98812760	-	98922727	98981423
	PVDF	PTFE	PTFE	98923288	98828464	98863254	98922727	99018339
	PVDF	FKM	PTFE	98965741	98812757	-	98922727	99018339
	PVC	EPDM	PTFE	98923150	98828468	98863252	98922727	98808117
	PVC	FKM	Glass	98965724	98828457	98863248	98922727	98808117
	PVC	EPDM	SS	98965725	98828456	98863247	98922727	98808117
	PVC	PTFE	PTFE	98965728	98802208	-	98922727	98808117
	PVC	EPDM	Ceramic	98965729	98794843	-	98922727	98808117
	PVC	FKM	Ceramic	98827341	98828462	-	98922727	98808117
	PVC	PTFE	Ceramic	98965730	98828469	98863253	98922727	98808117
	PVC	FKM	SS	98827342	98828463	98863257	98922727	98808117
	SS	EPDM	SS	98827233	98812756	-	98922727	98968996
	SS	FKM	SS	98965743	98828465	98863255	98922727	98968996
	SS	PTFE	SS	98827234	98812758	98863256	98922727	98968996

Nominal capacity [l/h]	Materials			Kit, maintenance [1]	1 valve (standard)	1 valve (spring-loaded) 0.6 bar	Kit diaphragm	Kit dosing head
	Head / valve body	Gaskets	Balls					
37, 82, 160, 224, 95, 199, 280	PP	EPDM	PTFE	98965766	98828458	98863249	98922728	98981424
	PP	PTFE	PTFE	98965746	98828467	-	98922728	98981424
	PP	FKM	Glass	98965748	98828459	98863250	98922728	98981424
	PP	EPDM	Ceramic	98827747	98812760	-	98922728	98981424
	PP	EPDM	SS	98965749	98828466	-	98922728	98981424
	PVDF	PTFE	PTFE	98923304	98828464	98863254	98922728	99018340
	PVDF	PTFE	Ceramic	98965752	98812759	-	98922728	99018340
	PVC	PTFE	PTFE	98965744	98802208	-	98922728	98808118
	PVC	FKM	Glass	98965745	98828457	98863248	98922728	98808118
	PVC	EPDM	SS	98923302	98828456	98863247	98922728	98808118
	PVC	EPDM	PTFE	96688839	98828468	98863252	98922728	98808118
	PVC	EPDM	Ceramic	98965765	98794843	-	98922728	98808118
	PVC	FKM	Ceramic	98827244	98828462	-	98922728	98808118
	PVC	PTFE	Ceramic	98965750	98828469	98863253	98922728	98808118
	PVC	FKM	SS	98827343	98828463	98863257	98922728	98808118
	SS	EPDM	SS	98965753	98812756	-	98922728	98968997
	SS	FKM	SS	98965754	98828465	98863255	98922728	98968997
	SS	PTFE	SS	98827235	98812758	98863256	98922728	98968997
60, 130, 255, 380, 152, 321, 460	PP	EPDM	PTFE	98965763	98828458	98863249	98922729	98981425
	PP	PTFE	PTFE	98965755	98828467	-	98922729	98981425
	PP	FKM	Glass	98827741	98828459	98863250	98922729	98981425
	PP	EPDM	Ceramic	98827742	98812760	-	98922729	98981425
	PP	EPDM	SS	98965756	98828466	-	98922729	98981425
	PP	FKM	SS	98965758	98812755	-	98922729	98981425
	PVDF	PTFE	PTFE	98923307	98828464	98863254	98922729	99018341
	PVC	FKM	Glass	98871195	98828457	98863248	98922729	98808120
	PVC	EPDM	SS	98923306	98828456	98863247	98922729	98808120
	PVC	EPDM	PTFE	98965759	98828468	98863252	98922729	98808120
	PVC	PTFE	PTFE	98965760	98802208	-	98922729	98808120
	PVC	EPDM	Ceramic	98965761	98794843	-	98922729	98808120
	PVC	FKM	Ceramic	98827344	98828462	-	98922729	98808120
	PVC	PTFE	Ceramic	98965762	98828469	98863253	98922729	98808120
	PVC	FKM	SS	98827345	98828463	98863257	98922729	98808120
	SS	EPDM	SS	98827236	98812756	-	98922729	98968998
	SS	FKM	SS	98871199	98828465	98863255	98922729	98968998
	SS	PTFE	SS	98827237	98812758	98863256	98922729	98968998

[1] Kit, maintenance may contain single parts or complete valve, depending on size and material.

Model 226, DN size 32

Nominal capacity [l/h]	Materials			Kit, maintenance [1]	1 valve (standard)	1 valve (spring-loaded) 0.6 bar	Kit diaphragm	Kit dosing head
	Head / valve body	Gaskets	Balls					
249, 315, 525, 765	PP	EPDM	PTFE	98871180	98803613	-	98922730	98981426
	PP	FKM	Glass	98871191	98803614	On req.	98922730	98981426
	PVDF	PTFE	PTFE	98871196	98802232	On req.	98922730	99018342
	PVC	PTFE	PTFE	98871192	98802210	-	98922730	98808121
	PVC	FKM	Glass	98871193	98812754	On req.	98922730	98808121
	PVC	EPDM	SS	98871194	98802231	-	98922730	98808121
	SS	FKM	SS	98871197	98802234	On req.	98922730	98969004
	SS	PTFE	SS	98871198	98802235	-	98922730	98969004

[1] Kit, maintenance may contain single parts or complete valve, depending on size and material.

Model 227, DN size 65

Nominal capacity [l/h]	Materials			Kit, maintenance [1]	1 valve (inlet side)	1 valve (outlet side)	Kit diaphragm	Kit dosing head
	Head / valve body	Gaskets	Balls					
430, 860, 1120	PP	FKM	PP	96688805	98926688	98927589	99145973	On req.
	PVC	FKM	PVC	91835856	98926673	98927590	99145973	On req.
	SS	FKM	SS	96688806	98927584	98927601	99145973	On req.
770, 1520, 2000	PP	FKM	PP	96688807	98926688	98927589	99145974	On req.
	PVC	EPDM	PVC	91835859	98927585	98927602	99145974	On req.
	PVC	FKM	PVC	91835858	98926673	98927590	99145974	On req.
	SS	FKM	SS	96688808	98927584	98927601	99145974	On req.

[1] Kit, maintenance may contain single parts or complete valve, depending on size and material.

Cables and connectors

Application		Type	Pins	Coding	Straight/angled	Cable length	Other	Kit No
Input	Analog contact for remote switch	Plug connector	4	Groove (nut)	Straight	2		96609014
						5		96609016
						Plug only		96698715
					Angled	2		96693246
Output	Error relay stroke or pre-empty relay	Plug connector	4	Tappet	Straight	2		96609017
						5		96609019
						Plug only		96696198
					Angled	2		96698716
Input	Empty	Flat plug connector	2	Alldos-type	Straight	Plug only	Soldered cable	96679388
Input	(Pre-)empty	Flat plug connector	3	Alldos-type	Straight	Plug only	Soldered cable	96630345
Adaptor flat-round	(Pre-)empty	Plug connector	4	Groove (nut)	Straight	Plug only		96635010

DMX lubricant kits

The kits include maintenance parts like gaskets, oil filter etc.

Model	Nominal capacity	Variant	Description	Kit No
221	All		Kit grease, approx. 0.2 kg	*98727125*
226L	All	Single head	Kit grease, approx. 0.8 kg	*98727126*
226L/2	All	Double head	Kit grease, approx. 1.4 kg	*98727127*
226M	All	Single head	Kit grease, approx. 0.6 kg	*98727129*
226M/2	All	Double head	Kit grease, approx. 0.6 kg	*98727129*
227	All	Single head	Kit hydraulic oil, approx. 5.0 l (DHG68)	*98683958*
227/2	All	Double head	Kit hydraulic oil, approx. 7.5 l (DHG68)	*98683959*

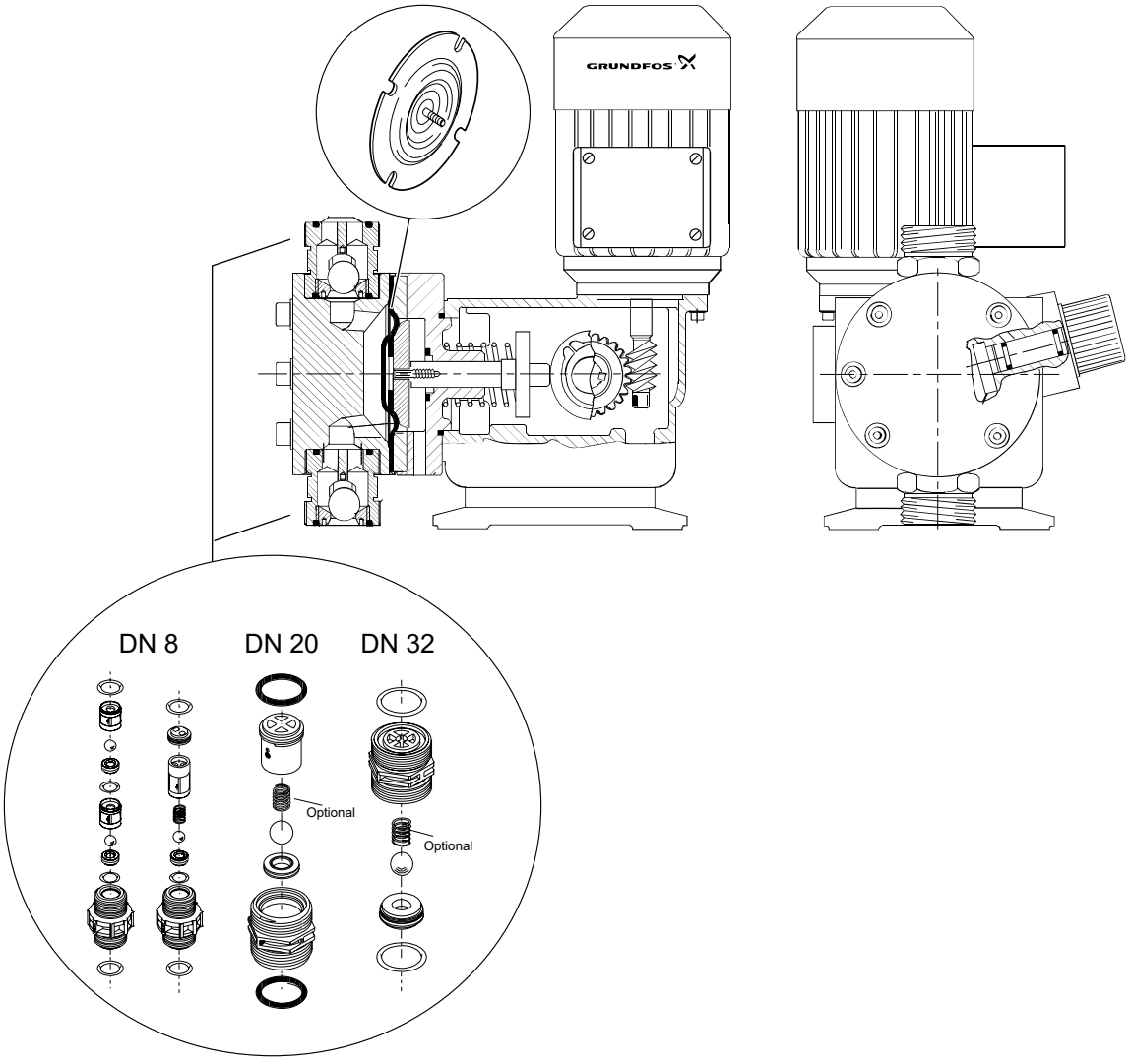

TM067973

Accessories for dosing pumps

Spare parts for pressure loading/relief valves

Spare parts for PLV and PRV

Max. flow [l/h]	Connection size [inch]	Kit description	Kit no
60	G 5/8	3 x gasket FKM 3 x gasket EPDM 1 x diaphragm 1 x pressure spring 1 x spring cup 1 x support disk	*99369777*
		3 x gasket PTFE 1 x diaphragm 1 x pressure spring 1 x spring cup 1 x support disk	*99369778*
460	G 5/4	3 x gasket FKM 3 x gasket EPDM 1 x diaphragm 1 x pressure spring 1 x spring cup 1 x support disk	*99367773*
		3 x gasket PTFE 1 x diaphragm 1 x pressure spring 1 x spring cup 1 x support disk	*99367774*

Spare parts for pressure loading/relief valves DN 20 G 5/4 (old type)

Valve PN	Kit description	Kit no
91835674 *96295888* *96295889* *96295890* *96295891* *96295892* *96295903* *96295904* *96295905* *96295906* *96295907* *96376567* *96693421* *96693603* *96693604* *96693704* *96693705* *96695973* *96727370* *96727383* *96727384*	3 x gasket FKM 3 x gasket EPDM 1 x diaphragm 1 x pressure spring 1 x spring cup 1 x support disk	*99369868*
96618727 *96699704* *96727369*	3 x gasket PTFE 1 x diaphragm 1 x pressure spring 1 x spring cup 1 x support disk	*99369869*

Spare parts for pressure loading/relief valves DN 32 (old type)

Valve PN	Kit description	Kit no
96295893 *96295894* *96295895* *96295896* *96295897* *96295908* *96295909* *96295910* *96295911* *96295912* *96652055* *96695695* *96695696* *96695919* *96695954* *96698322* *96699612* *96727371* *96727379* *96727380* *96727381* *96727385*	3 x gasket FKM 3 x gasket EPDM 1 x diaphragm 1 x pressure spring 1 x spring cup 1 x support disk	*99369870*
96692234	3 x gasket PTFE 1 x diaphragm 1 x pressure spring 1 x spring cup 1 x support disk	*99369871*

Service tools for dosing pumps

Profi tester

The Profi tester is a special tool to check the inputs and outputs of Grundfos dosing pumps.

Description	Kit No
Profi tester	*99600937*

Hydraulic test unit

The hydraulic test unit is used to check the hydraulic performance of Grundfos dosing pumps up to 10 bar and capacity up to 200 l/h.

Description	Kit No
Hydraulic test unit (max. 200 l/h, max. 10 bar)	*99600938*

Vaccuperm system

Overview of components

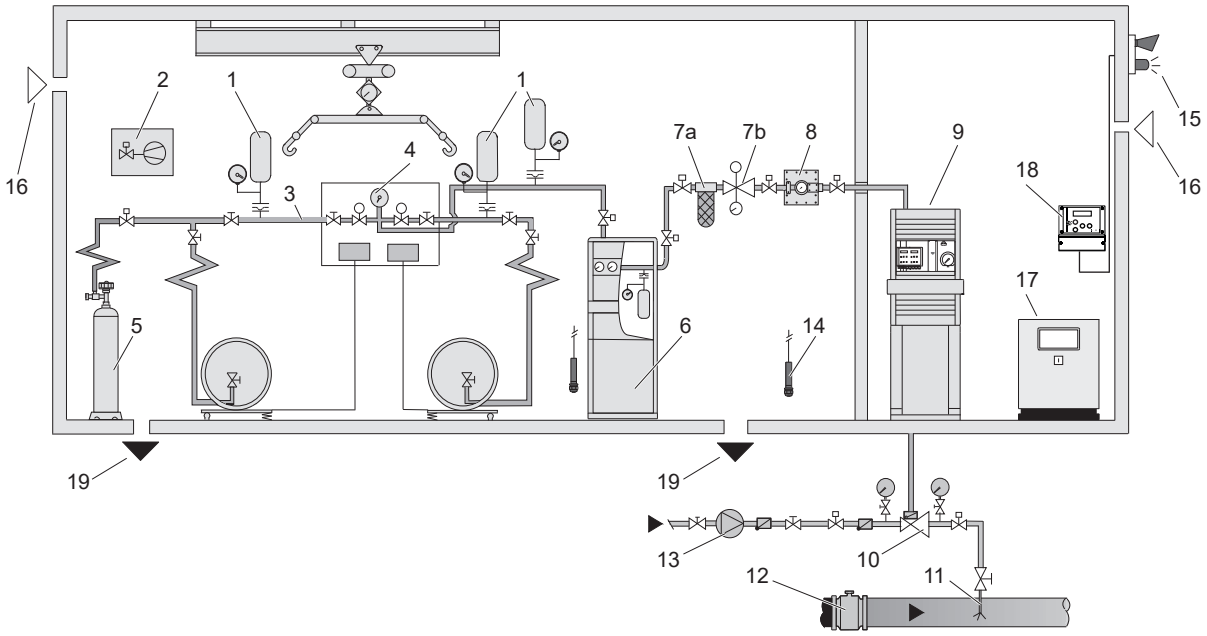

Pos.	Description	For kits see page
1	Expansion tank	Expansion tank
2	Safety stop valve	Safety stop valve
3	Header line (manifold)	Header line (manifold)
-	Flat gasket sets	Flat gasket sets
4	Change-over device	Change-over device
5	Nitrogen rinsing device	
6	Evaporator	Evaporator
7a	LiquFilt (heated liquid trap with filter)	LiquFilt
7b	Pressure reducing valve	Pressure reducing valve
8	Vacuum regulator	Vacuum regulators VGA-111, VGA-146, VGS-147, VGS-148
-	Vacuum connections	Vacuum connections and lines
9	Dosing regulator	Dosing regulators VGA-113, VGA-117, VGS-141, VGS-143, VGS-145
-	Compact dosing unit VBG-103	Compact dosing unit VGB-103
10	Gas injector	Gas injector
11	Injection unit	Injection unit
-	Chlorine gas adsorption filter	Chlorine gas adsorption filter
12	Flowmeter	
13	Motive water booster pump	
14	Chlorine gas sensor	
15	Optical and acoustic alarm devices	
16	Ventilation of the building	
17	Central control panel	
18	Gas warning system	
19	Vent to chlorine gas neutralisation system	

Related information

Vaccuperm service kits

Vaccuperm service kits

Expansion tank

Type	Kit description	Medium	Kit No
Expansion Tank	Bursting disk	Chlorine	95718356
		NH_3/SO_2	95718358
	Bursting disk support		95718357

Safety stop valve

Type	Kit description	Medium	Kit No
543-010	Gasket set	Chlorine	96729679
		NH_3/SO_2	96729680

Header line (manifold)

Kit description	Version	Medium	Kit No
Copper line	1 m	Chlorine	99356968
	2 m		99356984
Flat gasket set for copper line	200 pieces	all	99055003
Stainless steel line	1 m	NH_3/SO_2	99357021
	1.5 m		99357023
Connection valve complete	G 5/8	Chlorine	96688688
		NH_3/SO_2	96688694
	G 3/4	Chlorine	96688687
		NH_3/SO_2	96688693
	1"	Chlorine	96690367
		NH_3/SO_2	96688692
	1.03-14	Chlorine	96688689
	5/4"	Chlorine	96690368
		NH_3/SO_2	96688695

Flat gasket sets

Kit description	Version	Kit No
Flat gasket set for connection valve and pressurized gas connection of 103, 111 and 146	1", 200 pieces	99055005
	USA, 100 pieces	99353632
	M26x3, 100 pieces	99353631
	1 1/4", 100 pieces	99353630
	for ext. filter, 100 pieces	99353629
	for liquid trap, 25 pieces	99353628
Flange gasket set for 147 and 148	DN25	96688979

Change-over device

Type	Kit description	Medium	Kit No
185-1	Gasket set	Chlorine	96688979
185-2 (with bypass)			
186-120	Ball valve	Chlorine	95720552
189-010	Gasket set	Chlorine	91835829
189-010	Gasket set	NH_3/SO_2	96688791

Evaporator

Type	Kit description	Medium	Kit No
171W (water-heated)	Gaskets, copper line, bursting disk	Chlorine	95705524
	Gasket set	Chlorine	96688864
171 (oil-heated)	Gaskets, copper line, bursting disk	Chlorine	95705522
	Gaskets, copper line, bursting disk	NH_3/SO_2	95705523
	Gasket set	Chlorine/NH_3/SO_2	96688715
	Gaskets heating flange	Chlorine/NH_3/SO_2	96729530

LiquFilt

Type	Kit description	Medium	Kit No
524-2x	Spare filters and gasket	Chlorine	91835919

Pressure reducing valve

Maintenance kits

Type	Version	Medium	Kit No
544-101-x	G1/2, DN15	Chlorine	96688978
544-1017-x	G1/2, DN15	NH_3/SO_2	95709195
544-210-x	G1/2, DN15, Servomotor	Chlorine	96688978
544-2107-x	G1/2, DN15, Servomotor	NH_3/SO_2	95709195
544-102-x	G1, DN25	Chlorine	91835913
544-1027-x	G1, DN25	NH_3/SO_2	91835914
544-220-x	G1, DN25, Servomotor	Chlorine	91835913
544-2207-x	G1, DN25, Servomotor	NH_3/SO_2	91835914

Vacuum regulators VGA-111, VGA-146, VGS-147, VGS-148

Type	Version	Kit description	Medium	Kit No
VGA-111	111-202, 4 kg/h without liquid trap	Service kit	Chlorine	91835972
VGA-111	111-102	Service kit	Chlorine	96689047
VGA-111	111-202, all versions	Service kit		96688860
VGA-111	111-202, 4 kg/h with liquid trap	Service kit	Chlorine	91835977
VGA-111		Diaphragm (4 pieces)	Chlorine	99220809
VGA-111		Diaphragm service kit	Chlorine	98025823
VGA-111		Valve cone silver (4 pieces)	Chlorine	99220811
VGA-111	111-202, 4 kg/h without liquid trap	Service kit	$NH_3/SO_2/CO_2$	96689051
VGA-111	111-202, 4 kg/h with liquid trap	Service kit	$NH_3/SO_2/CO_2$	96689054
VGA-111		Manometer G 1/4	Chlorine	96688685
VGA-146	Without liquid trap	Service kit	$NH_3/SO_2/CO_2$	96688781
	With liquid trap	Service kit		96688782

Type	Version	Kit description	Medium	Kit No
VGA-146	Without liquid trap	Service kit	Chlorine	91836513
	With liquid trap	Service kit		91835842
VGA-146		Diaphragm	all	99351261
VGA-146		Valve cone (4 pieces)	Chlorine	99220811
VGS-147		Service kit	Chlorine	96688764
VGS-147		Service kit	NH_3	96688787
VGS-147		Service kit	SO_2	
VGS-147		Diaphragm	all	99351261
VGS-148	70 kg/h	Service kit	Chlorine	96688765
VGS-148	120 kg/h	Service kit	Chlorine	96688766
VGS-148	200 kg/h	Service kit	Chlorine	96688767
VGS-148	35 kg/h	Service kit	NH_3	96688788
VGS-148	65 kg/h	Service kit	SO_2	
VGS-148	60 kg/h	Service kit	NH_3	96688789
VGS-148	115 kg/h	Service kit	SO_2	
VGS-148	100 kg/h	Service kit	NH_3	96688790
VGS-148	190 kg/h	Service kit	SO_2	

Vacuum connections and lines

Kit description	Version	Kit No
Spare, pipe connection DN10, 12/16 mm	O-ring material FKM	99358522
Spare, pipe connection DN15, 15/20 mm		99358518
Spare, hose connection, 1/2 NPT		99358527
Spare, hose connection, 8/11 mm		99358520
Spare, hose connection, 10/14 mm		99358521
Spare, hose connection, 12/16 mm		99358523
Spare, pipe connection DN15, 15/20 mm	O-ring material EPDM	99358526
Spare, hose connection, 10/14 mm		99358519
Spare, hose connection, 8/11 mm		99358524
PE-hose 8/11 mm, full vacuum	10 m	96701705
	25 m	96695982
PE-hose 10/14 mm, full vacuum	10 m	91836646
	25 m	96727466

Dosing regulators VGA-113, VGA-117, VGS-141, VGS-143, VGS-145

Type	Version	Kit description	Medium	Kit No
VGA-113	Geco 113-110	Gasket set	Chlorine	91835973
VGA-113	Geco 113-110	Gasket set	$NH_3/SO_2/CO_2$	96689052
VGA-113		Gasket set	Chlorine	91835974
VGA-113		Gasket set	$NH_3/SO_2/CO_2$	96689053
VGA-113		Diaphragm, screws, spring, O-rings	Chlorine	96688861
VGA-113		Diaphragm (4 pieces)	all	99220809
VGA-113		Diaphragm service kit	Chlorine	96680603
VGA-117	Geco	Gasket set	Chlorine	91835976
VGA-117	Geco	Gasket set	$NH_3/SO_2/CO_2$	96689050
VGA-117		Gasket set	Chlorine	95725112
VGA-117		Diaphragm	all	99351261
VGS-141	200, 500 g/h	Gaskets, diaphragms, grease	Chlorine	96729331
VGS-141	1000 g/h - 10 kg/h	Gaskets, diaphragms, grease	Chlorine	96688759
VGS-141		Diaphragm	all	99351261
VGS-143	40 kg/h	Gaskets, diaphragms, grease	Chlorine	96688761
VGS-145	200 kg/h	Gaskets, diaphragms, grease	Chlorine	96688763

Compact dosing unit VGB-103

Type	Version	Kit description	Medium	Kit No
VGB-103	until 12-2005		Chlorine	91835975
VGB-103	103-100 from 01-2006		Chlorine	96688961
VGB-103		Diaphragm (4 pieces)	Chlorine	99220809
VGB-103		Diaphragm service kit	Chlorine	98025823

Gas injector

PVC injector - GECO series

Kits include diaphragm, seat, piston, gaskets

Type	Suction capacity [kg/h]	Backpressure [bar]	Medium	Kit No
545-51x; 545-52x	0-0.5	0-7	Chlorine	91835846
545-10x	0.5-1			
545-20x	1-2			

High pressure injector

Kits include ball, seat, piston, gaskets

Type	Suction capacity [kg/h]	Backpressure [bar]	Medium	Kit No
545-138x	0.5-2	16-25	Chlorine	96688796
545-138x.1	0.5-2	5-16	Chlorine	96688797

PVC injector

Kits include diaphragm, seat, piston, gaskets

Type	Suction capacity [kg/h]	Backpressure [bar]	Medium	Kit No
545-0501-x; 545-1001-x; 545-2001-x	0.5-2	7-10	Chlorine	95715145
545-xxxx-1; 545-xxxx-2; 545-xxxx-3; 545-xxxxx-1; 545-xxxxx-2; 545-xxxxx-3	0.5-4	0-7	Chlorine	96688748
545-x095-x	1-4	0-7	Chlorine	96729511
545-3099x	3	0.5-6.5	Chlorine	95701435
545-4099x	4	0-3		
545-x03x	3-10	0-7	Chlorine	96688795
545-x519-x	4-10	0-10	Chlorine	96688738

Type	Suction capacity [kg/h]	Backpressure [bar]	Medium	Kit No
545-6030x	6-8	0-7	Chlorine	*91835847*
545-8030x	8-10	0-7		
545-10030x	10	0-3		
545-x518-x	10	0-7	Chlorine	*96688738*
545-x615	10-20	0-10	Chlorine	*96688740*
545-x715	40	0-7	Chlorine	*96688741*
545-x816	70	0-8	Chlorine	*96688743*
545-x916	90-120	0-7	Chlorine	*96688745*
545-x016	150-200	0-7	Chlorine	*96688747*
545-xxxx-17; 545-xxxx-27; 545-xxxx-37; 545-xxxxx-37; 545-xxxxx-17	0.5-2	0-7	NH_3/SO_2	*95701437*
545-3037-x; 545-4037-x	3-4	0-7	NH_3/SO_2	*96729338*
545-6037-x; 545-8037-x	4-8	0-7	NH_3/SO_2	*96729339*
545-x5187	5-10	0-7	NH_3/SO_2	*96729325*
545-x6157	6-20	0-10	NH_3/SO_2	*96688739*
545-x7157	20-40	0-7	NH_3/SO_2	*96688742*

Injection unit

Steel version with diaphragm valve

Injection unit PN	Type	Flange	Kit description	Kit No
96727321	522-302	DN 25	3 x gasket 1 x diaphragm	*99368785*
96727322	522-312	DN 32	3 x gasket 1 x diaphragm	*99368786*
96727319	522-264	DN 50	3 x gasket 1 x diaphragm	*99368787*
96727320	522-274	DN 65	3 x gasket 1 x diaphragm	*99368789*
96727318	522-254	DN 80	3 x gasket 1 x diaphragm	*99368790*

Chlorine gas adsorption filter

Type	Kit description	Medium	Kit No
524-3x	Refilling package 4 kg	Chlorine	*96688989*

Safety equipment

Gas mask, chlorine gas

Gas mask PN	Kit description	Info	Kit No
96727010 (515-401)	Filter	DIN EN 14387	*96688099*

Oxiperm Pro OCD-162

Maintenance kits Oxiperm Pro OCD-162 (5-60 g/h)

Oxiperm Pro OCD-162 (5 g/h)

Oxiperm Pro OCD-162-5	Dosing pump for chlorine dioxide	Product No.
until June 2012	mechanical and digital	*95702445*
	without	*95702446*
from June 2012 until July 2016	SMART Digital DDA	*98153636*
	without	*98153651*
from August 2016	SMART Digital DDA	*99136353*
	without	*99136354*

Oxiperm Pro OCD-162 (10 g/h)

Oxiperm Pro OCD-162-10	Dosing pump for chlorine dioxide	Product No.
until June 2012	mechanical DMI	*95702500*
	digital DDI	*95707853*
	without	*95702499*
from June 2012 until July 2016	SMART Digital DDA	*98153962*
	without	*98153966*
from August 2016	SMART Digital DDA	*99136355*
	without	*99136356*

Oxiperm Pro OCD-162 (30 g/h)

Oxiperm Pro OCD-162-30	Dosing pump for chlorine dioxide	Product No.
until June 2012	mechanical DMX	*95717915*
	digital DDI	*95717916*
	without	*95717917*
after June 2012	mechanical DMX	*98162637*
	digital DDI	*98162644*
	without	*98162647*

Oxiperm Pro OCD-162 (60 g/h)

Dosing pumps for hydrochloric acid and sodium chlorite	Dosing pump for chlorine dioxide	Product No.
DMX (all years)	mechanical DMX	*95717919*
	digital DDI	*95717920*
	without	*95717921*
DDE (after 03-2012, only 115 V)	digital DDI	*98382087*
	without	*98382297*

Spare parts Oxiperm Pro OCD-162 (5-10 g/h)

Part	Description	Version	Product No.
Dosing pump for HCl	230 V	DDE 10-6, complete	98163454
	115 V, USA cable		98163456
Dosing pump for $NaClO_2$	230 V		98163419
	115 V, USA cable		98163440
Dosing pump for ClO_2	230 V	DDA, complete	98163484
	115 V, USA cable		98163486
Suction lance for HCl	for 30-litre container	complete	98163672
	for 55-gallon container		98163679
Suction lance for $NaClO_2$	for 30-litre container		98163639
	for 55-gallon container		98163678
Hose PTFE 4/6,transparent	to reaction tank / to volume compensation bag	1.5 m	96727482
		10 m	96692437
Hose PE 6/9	to solenoid valve	10 m	96727412
Hose PVC 6/12			96653571
Hose PVC 8/11, transparent	for reaction tank drain	1.25 m	95717381
Connection PVC G 5/8 female/hose set	for suction lances	U2 metric connection set for Europe, PVC, for hoses: 4/6, 6/9, 6/12, 9/12	97691903
Connection PVDF G 5/8 female/hose set	for dosing line of multi-function valve	U2 metric connection set for Europe, PVDF, for hoses: 4/6, 6/9, 6/12, 9/12	97691904
Connection G 5/8 female/hose set	for dosing line of multi-function valve, USA	U7 connection set USA, PVDF, for hoses: 1/8 x 1/4, 1/4 x 3/8, 3/8 x 1/2	97691907
Connection G 1/4 male/hose 4/6	to input of reaction tank	2 pieces	95717382
Solenoid valve for dilution water	230 V	without screw connections	95717903
	115 V		95717904
Level indicator of reaction tank		4 switching points	99327316
Level indicator of batch tank		2 switching points	95717906
Reaction tank with batch tank	OCD-162-5	complete	95717907
	OCD-162-10		95717911
Ball valve at the batch tank		1 piece	95717384
Volume compensation bag		1 piece	95717908
Activated carbon filter		1 piece	95717909
Valve at the activated carbon filter	inlet and outlet valve	2 pieces	95717436
Multi-function valve		complete	95704598
Cover		complete	95717438
Electronic controller, 230 V	OCD-162-5	complete	95715737
Electronic controller, 115 V		complete	95715738
Electronic controller, 230 V	OCD-162-10	complete	95715740
Electronic controller, 115 V		complete	95715741
Strainer	for input of solenoid valve	5 pieces	95717437
System frame			98163701
T-piece for PTFE hose 4/6	to volume compensation bag	1 piece	95714891
Set of hoses 4/6, with connections	for suction lances	red and blue, 1.5 m each	98163781
Connection pieces between connection for hose and solenoid valve.	G 5/8 female/hose 6/9 for input of solenoid valve	1 complete set	95727673
	PE hose 1/4 x 3/8 for input of solenoid valve, USA		95727674
	G 5/8 female/hose 4/6 for output of solenoid valve		95727672
Connection for hoses 6/9 and 6/12	for input of solenoid valve		95717385
Connection for PE hose 1/4 x 3/8, USA			95717528
Connection G 3/8 female/hose 4/6	for output of solenoid valve	2 pieces	95717529
Connection G 5/8 female/hose 4/6	for internal connections	5 pieces	99026031
Non-return valve	for dosing line	2 pieces	98165354
Fastening set	hose clamps and screws		95717531

Spare parts Oxiperm Pro OCD-162-30, -60

Parts	Description		Version	Product No.
Dosing pump for $NaClO_2$	OCD-162-30	230 V	DDE 15-4	98163904
		115 V, USA cable		98163921
Dosing pump for HCl		230 V		98163923
		115 V, USA cable		98163925
Dosing pump for ClO_2		230 V	DMX	99435426
		115 V, USA cable		99436459
		115-230 V	DDI	95754516
		115 V, USA cable		95754517
Dosing pump for HCl	OCD-162-60	230 V	DMX	95717388
		115 V, USA cable	DDE 15-4	98163925
Dosing pump for $NaClO_2$		230 V	DMX	95717389
		115 V, USA cable	DDE 15-4	98163921
Dosing pump for ClO_2		230 V	DMX	99414814
		115 V, USA cable	DMX	95716873
		115-230 V	DDI	95754516
		115 V, USA cable		95754517
Suction lance for HCl	for 60-litre container		complete	98164260
	for 55-gallon container			98163679
	for 200-/1000-litre container			98164293
Suction lance for $NaClO_2$	for 60-litre container			98164258
	for 55-gallon container			98163678
	for 200-/1000-litre container			98164291
Hose PTFE 9/12	for internal connection		1.5 m	96727489
Hose PE 6/9	to solenoid valve		10 m	96727412
Hose PVC 6/12				96653571
Hose PVC 8/11	for drain of reaction tank		1.25 m	95717381
Connection PVC G 5/8 female/hose set	for suction lances		U2 metric connection set for Europe, PVC, for hoses: 4/6, 6/9, 6/12, 9/12	97691903
Connection PVDF G 5/8 female/hose set	for dosing line of multi-function valve		U2 metric connection set for Europe, PVDF, for hoses: 4/6, 6/9, 6/12, 9/12	97691904
Connection G 1/4 male/hose 4/6	from output of reaction tank		2 pieces	95717382
Solenoid valve for dilution water	230 V		without screw connections	95717444
	115 V			95717445
Diaphragm for solenoid valve dilution water				99287149
Level indicator of reaction tank	OCD-162-30		4 switching points	95717446
Level indicator of batch tank			2 switching points	95717447
Reaction tank with batch tank			complete	95717448
Level indicator of reaction tank	OCD-162-60		4 switching points	95717455
Level indicator of batch tank			2 switching points	95717456
Reaction tank			complete	95717457
Batch tank				95717458
Ball valve at the batch tank			1 piece	95717384
Volume compensation bag			1 piece	95717449
Adsorption filter			1 piece	95717450
Valve at the adsorption filter	inlet and outlet valve		2 pieces	95717436
Multi-function valve			complete	95704598
Cover				95717438
Foot cover				95717443
Electronic controller, 230 V	OCD-162-30			95715743
Electronic controller, 115 V				95715744
Electronic controller, 230 V	OCD-162-60			95715745
Electronic controller, 115 V				95715746
Strainer	for input of solenoid valve		5 pieces	95717437

Parts	Description	Version	Product No.
System frame			*95717451*
Foot			*95717452*
Hose PTFE 4/6, white	to volume compensation bag	1.5 m	*96727482*
T-piece for PTFE hose 4/6		1 piece	*95714891*
Connection pieces between connection for hose and solenoid valve.	G 5/8 male/G 1/4 male for input of solenoid valve	1 complete set	*95723465*
	G 1/4/G 5/8 male for output of solenoid valve		*95723463*
Connection for PE hose 6/9	for input of solenoid valve		*95717385*
Connection for PE hose 1/4 x 3/8, USA			*98165337*
Non-return valve	for dosing line	2 pieces	*98165354*
Connection G 5/8 female/hose 9/12	for internal connections	5 pieces	*98165381*
Fastening set	OCD-162-30 hose clamps and screws		*95717459*
	OCD-162-60 hose clamps and screws		*95717460*
Pipe elbow	at input of reaction tank		*95717386*

Oxiperm system
Oxiperm OCC-164 and OCD-164

Oxiperm OCC-164 (150-2500 g/h) and OCD-164 (30-2000 g/h) maintenance kits and spare parts

Description	OCC-164					OCD-164								Kit No
	164-150C	164-450C	164-750C	164-1300C	164-2500C	164-030D	164-120D	164-220D	164-350D	164-700D	164-1000D	164-1500D	164-2000D	
Dosing tubes for HCl and $NaClO_2$														
DN 4 (red) for HCl	X	X	X			X	X	X						*96688871*
DN 4 (blue) for $NaClO_2$	X	X	X			X	X	X						*96688872*
DN 8 (transparent) for HCl, $NaClO_2$				X	X				X	X	X	X	X	*96688873*
Foot valves														
Union nut, grey PVC (10 pieces)	X	X	X	X	X	X	X	X	X	X	X	X	X	*99205816*
Valve seat, grey PVC (10 pieces)	X	X	X	X	X	X	X	X	X	X	X	X	X	*99345588*
Ball, ceramic (10 pieces)	X	X	X	X	X	X	X	X	X	X	X	X	X	*99186335*
Foot valve DN 4	X	X	X			X	X	X						*95730320*
Foot valve DN 8				X	X				X	X	X	X	X	*95730321*
Weighting stone, KER 1101	X	X	X	X	X	X	X	X	X	X	X	X	X	*99345589*
Dosing controller														
Flowmeter DN 4														*99345603*
Flowmeter DN 4, size code on housing: 04	X	X				X	X							*99345604*
Flowmeter DN 4, size code on housing: 1			X					X						*99345605*
Flowmeter DN 8, size code on housing: 2	X								X					*99345606*
Flowmeter DN 8, size code on housing: 3				X										*99345607*
Flowmeter DN 8, size code on housing: 5		X	X		X					X	X			*99345608*
Flowmeter DN 8, size code on housing: 7				X								X	X	*99345609*
Flowmeter DN 20, size code on housing: 12					X									*99345610*
Label set														
Warning label, HCl label, $NaClO_2$ label	X	X	X	X	X	X	X	X	X	X	X	X	X	*99349364*
Temperature sensor														
Temperature sensor	X	X	X	X	X									*99349380*
O-ring (5 pieces)	X	X	X	X	X									*99185811*
Orifice for sensor, PTFE/carbon with O-ring	X	X	X	X										*99349381*
Reactor (3 x valves)														
For system backpressure lower than 3 bar														*96689070*
For system backpressure higher than 3 bar														*96689072*
For system backpressure lower than 3 bar						X	X	X						*91836549*
For system backpressure higher than 3 bar						X	X	X						*96689071*
For system backpressure lower than 3 bar									X	X	X	X	X	*91836550*
For system backpressure higher than 3 bar									X	X	X	X	X	*96689073*
For system backpressure lower than 3 bar	X	X	X											*96689074*
For system backpressure higher than 3 bar	X	X	X											*96689075*
For system backpressure lower than 3 bar				X										*96689076*
For system backpressure higher than 3 bar				X										*96689077*
For system backpressure lower than 3 bar					X									*96689078*
For system backpressure higher than 3 bar					X									*96689079*
Bypass, standard version with solenoid valve														
Solenoid valve 230 V, with flow limiter 8 l/min						X	X	X	X					*99345326*
Solenoid valve 115 V, with flow limiter 8 l/min						X	X	X	X					*99345328*
Solenoid valve 230 V, with flow limiter 16 l/min										X	X	X	X	*99345329*
Solenoid valve 115 V, with flow limiter 16 l/min										X	X	X	X	*99345331*
Flow limiter 8 l/min	X	X				X	X	X	X					*99345332*
Flow limiter 16 l/min			X	X	X					X	X	X	X	*99345343*

Description	OCC-164					OCD-164								Kit No
	164-150C	164-450C	164-750C	164-1300C	164-2500C	164-030D	164-120D	164-220D	164-350D	164-700D	164-1000D	164-1500D	164-2000D	
Flowmeter FHKU 100	X	X	X	X	X	X	X	X	X	X	X	X	X	99345347
Bypass pump														
Bypass pump 230 V, bypass internal	X	X	X	X	X	X	X	X	X	X	X	X	X	96913085
Solenoid valve														
Solenoid valve 230 V, 50 Hz	X	X	X	X	X	X	X	X	X	X	X	X	X	99349639
Solenoid valve 115 V, 60 Hz	X	X	X	X	X	X	X	X	X	X	X	X	X	99349640
Batch														
Flowmeter FHKU 100				X	X						X	X	X	91834753
Flowmeter FHKU 56		X	X						X	X				95712071
Flowmeter FHKU 25	X							X						91836499
Flowmeter FHKU 20							X							96681088
Flowmeter FHKU 15						X								91836552
Flowmeter FHKU 10														96681089
PVC solenoid valve 230 V, 50/60 Hz	X	X	X	X	X	X	X	X	X	X	X	X	X	96688597
PVC solenoid valve 115 V, 50/60 Hz	X	X	X	X	X	X	X	X	X	X	X	X	X	91836553
Pressure-retention valve DN 8	X	X	X			X	X	X						95730742
Pressure-retention valve DN 20				X	X				X	X	X	X	X	96376567
Suction injection for enclosure exhausting option														
Spare part set injector 545	X	X	X	X	X	X	X	X	X	X	X	X	X	96688748
Diffuser B complete						X	X	X						91834747
Diffuser C complete	X	X	X	X	X				X	X	X	X	X	91834748
Nozzle B						X	X	X						96681070
Nozzle C	X	X	X	X	X				X	X	X	X	X	91834743

Oxiperm OCC-164 (150-10000 g/h) maintenance kits for one year

Oxiperm type	Date of manufacture [MM/YYYY]	Variant	Pressure	Kit No
164-150C	until 12/2003		up to 3 bar	96729640
	until 12/2003		more than 3 bar	96729639
	from 01/2004 until 03/2012		up to 3 bar	96689100
	from 01/2004 until 03/2012		more than 3 bar	96689101
	from 04/2012		up to 3 bar	98363493
	from 04/2012		more than 3 bar	98363496
164-450C	until 12/2003		up to 3 bar	96729642
	until 12/2003		more than 3 bar	96729641
	from 01/2004 until 03/2012		up to 3 bar	99594985
	from 01/2004 until 03/2012		more than 3 bar	99595055
	from 04/2012		up to 3 bar	98363499
	from 04/2012		more than 3 bar	98363500
164-750C	until 12/2003		up to 3 bar	96729644
	until 12/2003		more than 3 bar	96729643
	from 01/2004 until 03/2012		up to 3 bar	99595006
	from 01/2004 until 03/2012		more than 3 bar	99595057
	from 04/2012		up to 3 bar	98363501
	from 04/2012		more than 3 bar	98363502
164-1300C	until 12/2003		up to 3 bar	96729646
	until 12/2003		more than 3 bar	96729645
	from 01/2004 until 03/2012		up to 3 bar	99595020
	from 01/2004 until 03/2012		more than 3 bar	99595666
	from 04/2012		up to 3 bar	98363503
	from 04/2012		more than 3 bar	98363504

Oxiperm type	Date of manufacture [MM/YYYY]	Variant	Pressure	Kit No
164-2500C	until 12/2003		up to 3 bar	96729648
	until 12/2003		more than 3 bar	96729647
	from 01/2004 until 03/2012		up to 3 bar	99595039
	from 01/2004 until 03/2012		more than 3 bar	99595667
	from 04/2012		up to 3 bar	98363505
	from 04/2012		more than 3 bar	98363506
164-4000C and 164-6000C	from 01/2004 until 03/2012	230 V and 115 V		99595668
	from 04/2012			98363507
164-7500C	from 01/2004 until 03/2012	115 V		99595672
	from 04/2012	115 V		98363509
	from 01/2004 until 03/2012	230 V		99595670
	from 04/2012	230 V		98363508
164-10000C	from 01/2004 until 03/2012	230 V and 115 V		99595671
	from 04/2012	230 V and 115 V		98363510

The package includes maintenance kit for dosing pump.

Oxiperm OCD-164 (30-2000 g/h) maintenance kits for one year

Oxiperm type	Date of manufacture [MM/YYYY]	Variant	Pressure	Kit No
164-030D 164-120D	until 12/2003	with calibration system	up to 3 bar	91836528
	until 12/2003	with calibration system	more than 3 bar	96729585
	from 01/2004 until 03/2012	with calibration system	up to 3 bar	99594274
	from 01/2004 until 03/2012	with calibration system	more than 3 bar	99594904
	from 01/2004 until 03/2012		up to 3 bar	99594978
	from 01/2004 until 03/2012		more than 3 bar	99594934
	from 04/2012	with calibration system	up to 3 bar	98363408
	from 04/2012	with calibration system	more than 3 bar	98363422
	from 04/2012		up to 3 bar	98363426
	from 04/2012		more than 3 bar	98363427
164-220D	until 12/2003		up to 3 bar	96729587
	until 12/2003		more than 3 bar	96729586
	from 01/2004 until 03/2012	with calibration system	up to 3 bar	99594871
	from 01/2004 until 03/2012	with calibration system	more than 3 bar	99594905
	from 04/2012	with calibration system	up to 3 bar	98363429
	from 04/2012	with calibration system	more than 3 bar	98363434
	from 01/2004 until 03/2012		up to 3 bar	99594954
	from 01/2004 until 03/2012		more than 3 bar	99594919
	from 04/2012		up to 3 bar	98363436
	from 04/2012		more than 3 bar	98363438
164-350D	from 01/2004 until 03/2012	with calibration system	up to 3 bar	99594884
	from 01/2004 until 03/2012	with calibration system	more than 3 bar	99594906
	from 04/2012		up to 3 bar	98363440
	from 04/2012		more than 3 bar	98363461
164-700D	until 12/2003		up to 3 bar	96729592
	until 12/2003		more than 3 bar	96729591
	from 01/2004 until 03/2012	with calibration system	up to 3 bar	99594885
	from 01/2004 until 03/2012	with calibration system	more than 3 bar	99594912
	from 04/2012		up to 3 bar	98363462
	from 04/2012		more than 3 bar	98363463
164-1000D	from 01/2004 until 03/2012	with calibration system	up to 3 bar	99594886
	from 01/2004 until 03/2012	with calibration system	more than 3 bar	99594914
	from 04/2012		up to 3 bar	98363464
	from 04/2012		more than 3 bar	98363465

Oxiperm type	Date of manufacture [MM/YYYY]	Variant	Pressure	Kit No
164-1500D	from 01/2004 until 03/2012	with calibration system	up to 3 bar	*99594892*
	from 01/2004 until 03/2012	with calibration system	more than 3 bar	*99594908*
	from 04/2012		up to 3 bar	*98363466*
	from 04/2012		more than 3 bar	*98363467*
164-2000D	from 01/2004 until 03/2012	with calibration system	up to 3 bar	*99594903*
	from 01/2004 until 03/2012	with calibration system	more than 3 bar	*99594911*
	from 04/2012		up to 3 bar	*98363469*
	from 04/2012		more than 3 bar	*98363470*

The package includes maintenance kit for dosing pump.

Oxiperm OCC-164 (150-2500 g/h) and OCD-164 (30-2000 g/h) maintenance kits for dosing pumps

	Pump	Voltage [V]	Medium	Kit No
164-150C	208-1.0	230	HCl / $NaClO_2$	*96641420*
		115	HCl / $NaClO_2$	
	221-16	230 / 115	H_2O	*91835948*
164-450C	208-3.0	230	HCl / $NaClO_2$	*96641420*
		115	HCl / $NaClO_2$	
	221-16	230 / 115	H_2O	*91835948*
164-750C	208-6.0	230	HCl / $NaClO_2$	*91835902*
		115	HCl / $NaClO_2$	
	221-27	230 / 115	H_2O	*91835950*
164-1300C	221-16	230	HCl / $NaClO_2$	*91835948*
		115	HCl / $NaClO_2$	
	221-50	230 / 115	H_2O	*96645652*
164-2500C	221-16	230	HCl / $NaClO_2$	*91835948*
		115	HCl / $NaClO_2$	
	253-100	230	H_2O	*91836270*
164-030D	208-1.0	230	HCl / $NaClO_2$	*96641420*
		115	HCl / $NaClO_2$	
164-120D	208-3.0	230	HCl / $NaClO_2$	*96641420*
		115	HCl / $NaClO_2$	
164-220D	208-6.0	230	HCl / $NaClO_2$	*91835902*
		115	HCl / $NaClO_2$	
164-350D	221-16	230	HCl / $NaClO_2$	*91835948*
		115	HCl / $NaClO_2$	
164-700D	221-16	230	HCl / $NaClO_2$	*91835948*
		115	HCl / $NaClO_2$	
164-1000D	221-27	230	HCl / $NaClO_2$	*91835950*
		115	HCl / $NaClO_2$	
164-1500D	221-35	230	HCl / $NaClO_2$	*91835954*
		115	HCl / $NaClO_2$	
164-2000D	221-50	230	HCl / $NaClO_2$	*96645652*
		115	HCl / $NaClO_2$	

Electronic board, Oxiperm OCC-164 (150-2500 g/h)

Type	Voltage [V]	Kit No
Control panel ALLDOS	230	*95725830*
Control panel ALLDOS	115	*95726832*
Control panel ASHLAND	230	*95726871*
Control panel ASHLAND	115	*95726872*

Electronic board, Oxiperm OCD-164 (30-2000 g/h)

Type	Voltage [V]	Kit No
Control panel ALLDOS	230	*95716606*
Control panel ALLDOS	115	*95726804*
Control panel ASHLAND	230	*95726869*
Control panel ASHLAND	115	*95726870*

Fuses for control panel

Type	Comment	Kit No
Set of fuses	For all systems	*96688774*

1 Fine fuses 5x20, inert: 0.1 A, 1 A, 6.3 A, 10 A, four of each size

Selcoperm system

Selcoperm SES 125-2000

Selcoperm electrolyser - spare parts

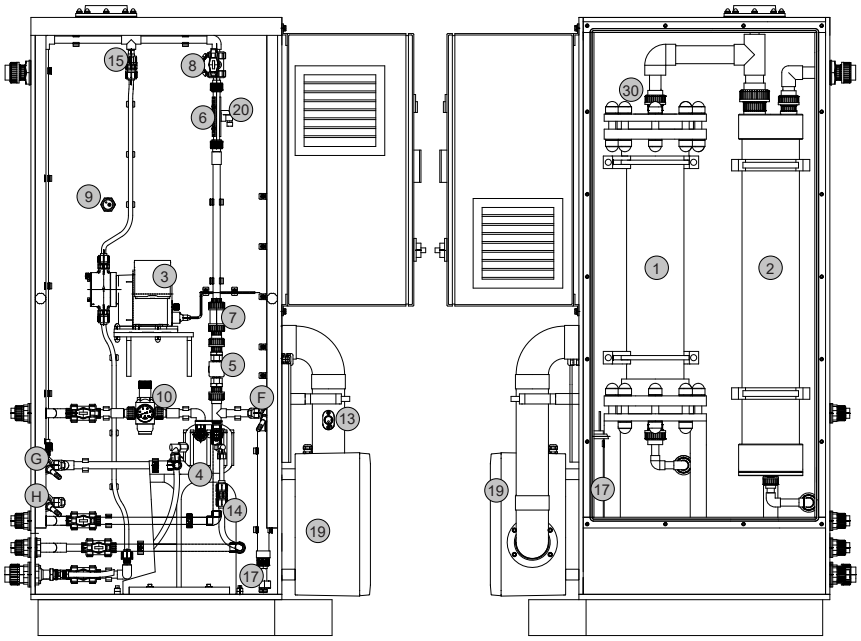

TM041499

	Product No.	Description	Pos.	Product No.	Description
1	*98056656*	Electrolysis cell (SES-125)	7	[1]	Non-return valve
	98056729	Electrolysis cell (SES-250)	8	*98058475*	Water flow adjustment valve
	98056755	Electrolysis cell (SES-500)	9	*95727178*	Degassing column level sensor
	98056757	Electrolysis cell (SES-1000)	10	*99710160*	Pressure reducing valve
	98056760	Electrolysis cell (SES-2000)	13	*95727177*	Air flow sensor
2	*99710914*	Degassing column (SES-125, -250, -500)	14	[1]	Brine valve water softener
	99710946	Degassing column (SES-1000, -2000)	15	[1]	Brine injection valve
3	*97721401*	Brine pump (SES-125, -250, -500)	17	*99710263*	Internal tray flood switch
	97722252	Brine pump (SES-1000, -2000)	19	*95727154*	Air dilution fan (SES-125, -250, -500)
4	*95724306*	Water softener		*95727155*	Air dilution fan (SES-1000, -2000)
5	*95723503*	Water solenoid valve	20	*95727192*	Bi-stable flowmeter switch
6	*95727171*	Flowmeter (SES-125)	30	*95727185*	Cell temp. sensor max. 70 °C
	95727172	Flowmeter (SES-250)			
	95727173	Flowmeter (SES-500)			
	95727174	Flowmeter (SES-1000)			
	95727175	Flowmeter (SES-2000)			

[1] see Maintenance kits SES 125-2000

Related information

Control cabinet - spare parts

Control cabinet - spare parts

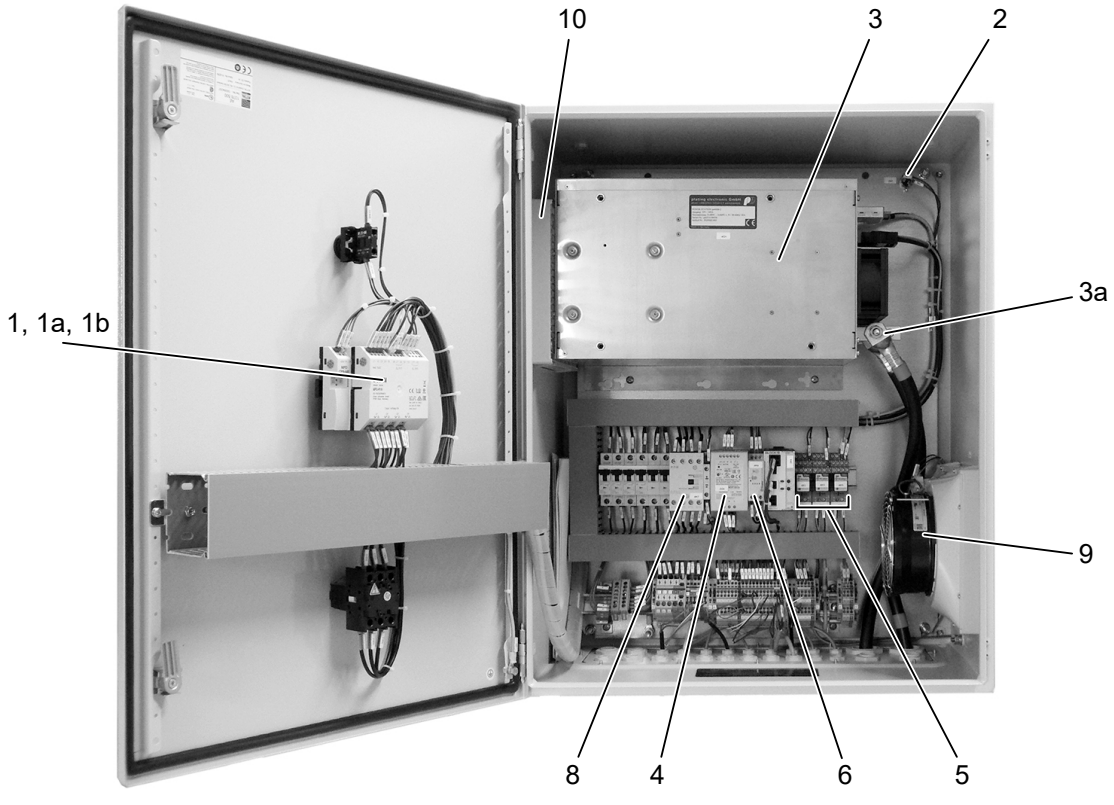

Pos.	Product No.	Description
1	*95729981*	Logic controller, language German
	95729982	Logic controller, language English
	95729983	Logic controller, language French
	95729984	Logic controller, language Russian
	95729985	Logic controller, language Spanish
	99536464	Logic controller, language Polish
1a	*95729979*	Display graphic
1b	*95729980*	Relay
2	*95727184*	Temperature sensor
3	*98710813*	Electrolyser power supply (SES-125)
	98710815	Electrolyser power supply (SES-250)
	98710816	Electrolyser power supply (SES-500)
	98710817	Electrolyser power supply (SES-1000)
	98710819	Electrolyser power supply (SES-2000)
3a	-	DC connections from power supply to electrolysis cell
4	*98059618*	Power supply internal
5	*98059659*	Relay
6	*98059686*	Timer relay
8	*98059653*	Alarm Relay (SES-125, -250, -500, -1000)
	98059655	Alarm Relay (SES-2000)
9	*98059565*	Fan for enclosure (SES-125, -250, -500)
	98059610	Fan for enclosure (SES-1000, -2000)
10	*98059643*	Fan filter

Maintenance kits SES 125-2000

The maintenance kit includes parts for maintenance after two years (maintenance kit for brine pump and for Selcoperm).

Description	Kit No
Maintenance kits for systems until 2010	
Selcoperm 125-500	*95702281*
Selcoperm 1000-2000	*95702282*
Maintenance kits for systems from 2011	
Selcoperm 125-500	*98045877*
Selcoperm 1000-2000	*98045899*
Maintenance kits for systems from 04-2012	
Selcoperm 125-500	*98047506*
Selcoperm 1000-2000	*98047507*
Maintenance kits for systems from 40-2019	
Kit, valves for SES 125-2000, comprising Brine valve water softener (14), double ball valve. Brine injection valve (15), spring loaded valve.	*99710096*
Kit, brine pump for SES 125-500	*97751474*
Kit, brine pump for SES 1000-2000	*97751510*
Kit, O-rings and gaskets for SES 125-2000	*98531493*

Acid cleaning kit

For cleaning the electrolyser cell in case of deposits.

Description	Kit No
Manual acid pump and connection hose	*95702377*

Brine tank for salt saturation - spare parts

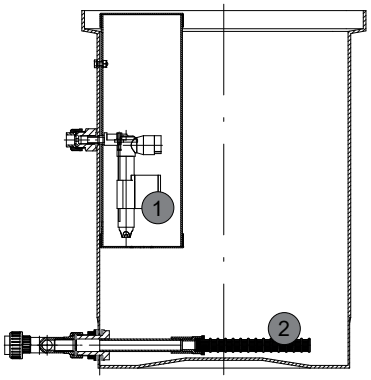

TM041506

Pos.	Product No.	Description
1	*98955389*	Side entry valve
2	*99787348*	3/4" lateral filter

NaClO solution storage tank - spare parts

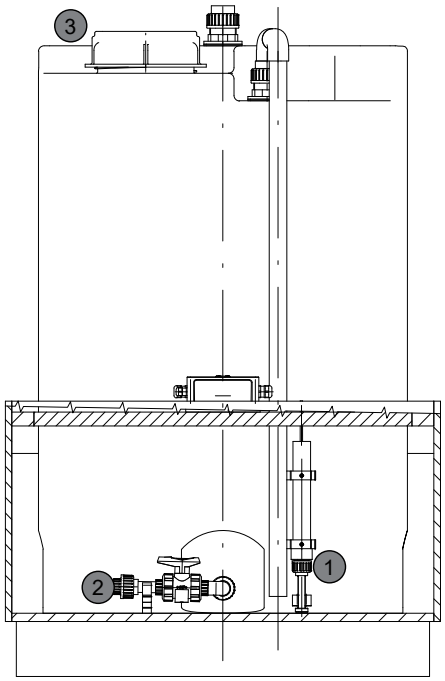

TM041595

Pos.	Product No.	Description
1	*99710406*	Tray flood switch
2	*95721859*	Pressure level sensor 0-10 V
3	*99706163*	Lock, tank cap, tank size 300-1000 l
	99703008	Lock, tank cap, tank size 2000-5000 l

Selcoperm SES 5000-45000

Selcoperm O-ring kits

Description	For SES type							Kit No
	5000	7500	10000	15000	20000	30000	45000	
O-ring kit for piping (NaClO outlet and T-piece)	X	X	X					99047273
				X				99047275
					X	X	X	99055042
O-ring kit for hydraulic chamber	X	X	X	X				99047280
					X	X	X	99055044
O-ring kit for electrolysis cell(s)	X	X						99047281
			X	X				99047284
					X	X		99055047
							X	99055048

Selcoperm electrolysis cells

Description	For SES type							Product number
	5000	7500	10000	15000	20000	30000	45000	
Electrolysis cell 1 - 5000 g/h	X		X		X			99047026
Electrolysis cell 2 - 5000 g/h			X		X			99047028
Electrolysis cell 1 - 7500 g/h		X		X		X	X	99047031
Electrolysis cell 2 - 7500 g/h				X		X	X	99047033
Electrolysis cell 3 - 7500 g/h							X	99054997

Brine dosing station

These maintenance kits comprise the diaphragm and valve parts for the maintenance of the brine pumps in the brine dosing station. One kit is required for each pump.

For SES type	Version	Pump type	Kit No
5000	until week 23-2017	DDI AF 150-4	96634524
	from week 24-2017	DDA FCM 200-4	99151341
7500	until week 23-2017	DDI AF 150-4	96634524
	from week 24-2017	DDA FCM 200-4	99151341
10000	until week 23-2017	DDI AF 150-4	96634524
	from week 24-2017	DDA FCM 200-4	99151341
15000	until week 23-2017	DME AR 375-10	96520380
	from week 24-2017	DDA FCM 200-4	99151341
20000		DME AR 375-10	96520380
30000		DME AR 940-4	96520391
45000		DME AR 940-4	96520391

Acid cleaning station

The maintenance kit comprises the diaphragm and valve parts for the maintenance of the acid cleaning pump in the acid cleaning station.

Acid cleaning station PN	Pump type	Medium	Kit No
98865693	DMX 460-3.5 (95750148)	HCl / citric acid	98871195

Selcoperm Accessories

Test kit for SES

Description	Kit No
Test kit for SES, comprising: • Measuring cylinder • Total hardness test for titrimetric determination of the water hardness • Thermometer • Spindle for density measurement • Titration set for measurement of the chlorine concentration in the sodium hypochlorite solution • Operating instructions	98842487

Spare parts for test kit

Description	Product number
Hydrometer	98504212
Thermometer	98708063
Stirring rod	95727771
Dispenser tip, 5 pcs	99619798
Total hardness test kit	98948745
Set of 100 Acidifying GP tablets and 100 Chlorine HR tablets	98144705
Set of 30 ml titrant (2N sodium thiosulfate solution ($Na_2S_2O_3$)) and dispenser tip	99619819

Selcoperm e-commissioning kit

Description	Kit No
Selcoperm E-Commissioning kit, comprising: • PC TOOL Link USB with cables • Cable for Varmeca FU • Adaptor for Draeger Regard 3900/3920 • Belimo Service Tool (ZTH and ZK4-Gen) • Cable USB 2.0 Type-A M -> Type -Micro-B M • Cable PATCHCABLE 2x RJ45 CAT5E 3M • USB - 32 GB / GWTS	99481722

Polydos

Polydos 412A spare parts

Description	For type PD412A	Product No.
Metering screw	500/1000/2000	*98502332*
	4000/6000	*98503705*
	10000	*98503704*
Pressure reducing valve	500/1000	*95734792*
	2000	*98421613*
	4000/6000	*95719774*
	10000	*98421615*
Solenoid valve	500/1000	*95706390*
	2000	*95706391*
	4000/6000	*95710313*
	10000	*98421611*
Stirrer on chamber I	500	*98421991*
	1000	*95716817*
	2000	*95716820*
	4000/6000	*95716824*
	10000	*95716829*
Stirrer on chamber II/III	500	*98421990*
	1000	*95716818*
	2000	*95716821*
	4000	*95716825*
	6000/10000	*95716827*
Water flow meter	500/1000	*99058227*
	2000	*99058275*
	4000/6000/10000	*99058279*

Measurement & control

AquaCells D1, D2, D3, D11, D12, D13

Electrodes, buffers

Buffer solution

Type	Info		Kit No
pH buffer	pH 4.01, pH 7, pH 9.18	3 x 100 ml	*96609165*
Redox buffer	+220 mV		*96609166*
KCl, 3 M	For the storage of electrodes		*96688696*

Distribution box

Type	Kit No
Distribution box	*91835294*

Electrodes, pH

Type	Version	Temp.	Pressure	Kit No
Electrode ceraminc	pH 1-12	-5 to +80 °C	6 bar	*96609158*
Electrode	pH 1-12	-5 to +80 °C	10 bar	*96609161*
Electrode PTFE diaphragm	pH 1-12	0 to +80 °C	6 bar	*96609159*
Electrode KCL tank	pH 0-12	-5 to +80 °C	0 - 6 bar	*95707720*

Electrodes, Redox

Type	Version	Temperature	Pressure	Kit No
Electrode cermanic		-5 to +80 °C	6 bar	*96609162*
Electrode	Only for DIP	-5 to +80 °C	6 bar	*96622944*
Electrode PTFE diaphragm	± 1500 mV	-5 to +80 °C	6 bar	*96609163*

H_2O_2

Type	Version	Comment	Kit No
Measuring electrode	Complete	Including electrolyte	*96622973*
Diaphragm	Incl. electrolyte		*96622974*
Electrolyte	H_2O_2		*96622975*
Cable		Length: 2 m	*91835331*

Peracetic acid

Type	Version	Comment	Kit No
Measuring electrode	Complete	Including electrolyte	*95701374*
Diaphragm	Incl. electrolyte		*96622962*
Electrolyte	Peracetic acid		*96622966*
Cable		Length: 2 m	*91835331*

Cables for measuring cells

Type	Version	Length	Kit No
DIA, DIP			
Signal cable, 4(0)-20 mA	Single screening 2-wire	1 m	*96687719*
		2 m	*96725671*
		10 m	*96725670*
		20 m	*96725672*
		50 m	*96725673*
Conex sensor interface	Single screening 4-wire	1 m	*96635553*
		5 m	*96611925*
		15 m	*96611928*
		25 m	*96611929*
Measuring cells			
Cable measuring electrode	D12, D13, 314-6xx, -9xx	1.2 m	*96687722*
Cable measuring electrode	D12, D13, 314-6xx, -9xx	2 m	*96687723*
Electrode cable [1]	Electrode connector N	1 m	*96609182*
Electrode cable [1]	Electrode connector N	3 m	*96609183*
Cable counter electrode	D11, 314-1xx, -2xx, -3xx	1 m	*96687765*
Cable counter electrode	D11, 314-1xx, -2xx, -3xx	3 m	*91835333*
Cable measuring electrode	D1, D2, D3	1 m	*96609184*
Cable measuring electrode	D1, D2, D3	3 m	*96609185*
Diaphragm measuring cells			
Sensor cable	PAA	2 m	*91835331*
Sensor cable	H_2O_2	2 m	*91835331*

[1] Coaxial

Spare parts for measuring cells

Type	Version	Medium	Kit No					
			D11, 314-1xx -2xx -3xx	D1	D13, 314-6xx	D3	D12, 314-9xx	D2
Reference electrode	Gold	Chlorine	*91835242*	-	-	-	-	-
Reference electrode	Platinum	Chlorine	*91835244*	-	-	-	-	-
Reference electrode		Chlorine	-	*96609174*	*96609174*	*96609174*	*96609174*	*96609174*
Measuring electrode	Gold	Chlorine	*91835242*	*96609175*	*91835855*	*96609175*	*96690373*	*96609175*
Measuring electrode	Platinum	Chlorine	*91835244*	*96609176*	*96688836*	*96609176*	*96688868*	*96609176*
Cleaning blade			-	*96609181*	-	*96622950*	-	*96622950*
Cleaning blade + sealing			-	-	*96657349*	-	*96690372*	-
Stirring magnet, sealing, balls, washer			*91835822*	-	-	-	-	-
Gaskets			-	*96609171*	-	*96609171*	-	*96609171*
Sample-water filter			*96681072*	*91834713*	*91834713*	*91834713*	*91834713*	*91834713*
Sample-water sensor	3 m		*96609173*	*96609173*	*91835355*	*96609173*	*96609173*	*96609173*
Sample-water sensor	1 m		*96609172*	*96609172*	*96687939*	*96609172*	*96609172*	*96609172*
Pt100	Temperature measurement, 1 m		*96687987*	-	*96697322*	-	*96687987*	-
Pt100	Temperature measurement, 3 m		*99432138*	-	*91834712*	-	*99432138*	-
Pressure-retention valve	0.3 bar outlet		*99253231*	*99253231*	-	-	*99253231*	*99253231*
Kit, counter electrode for AQC-D11			*99314386*					
Kit, cleaning motor AQC-D11, 230/240V			*99232699*					
Kit, cleaning motor AQC-D11, 115/120V			*99967442*					
Kit, cover for magnet compl. for AQC-D11			*98936013*					

Conex DIA-1, DIA-2, DIA-2Q

Type	Version	Kit No
Sensor interface	For panel-mounted amplifiers	*96681059*

DID

Replacement sensors

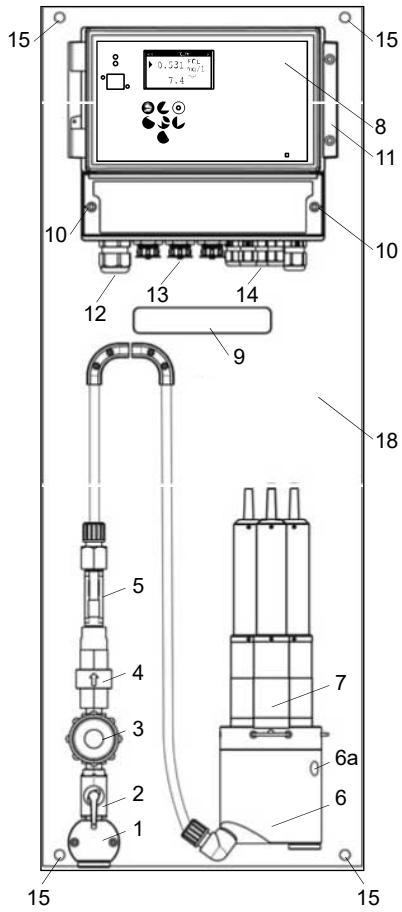

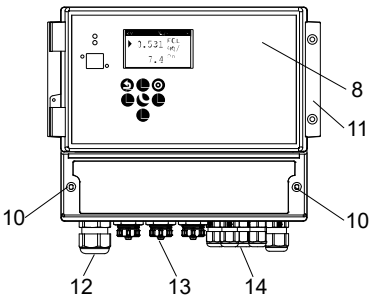

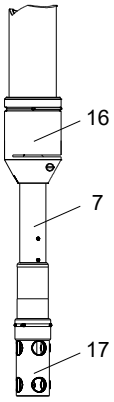

Replacement sensor for parameter	Sensor type	Part No
Free chlorine (FCl)	0-2ppm E507	*98915674*
Free chlorine (FCl)	0-20ppm, E 507	*98915675*
Free chlorine (FCl)	0-2ppm, E-520	*99290639*
Free chlorine (FCl)	0-20ppm, E-520	*99290641*
Total chlorine (TCl)	0-2ppm, E-507	*98915676*
Total chlorine (TCl)	0-20ppm, E-507	*98915677*
Total chlorine (TCl)	0-2ppm, E-525	*99290664*
Total chlorine (TCl)	0-2ppm, E-525	*99290665*
Chlorine dioxide (CDI)	0-2 ppm	*98915678*
Chlorine dioxide (CDI)	0-20 ppm	*98915679*
Hydrogen peroxide (HP)	0-200 ppm	*98915680*
Hydrogen peroxide (HP)	0-2000 ppm	*98915681*
Peracetic acid (PA)	0-200 ppm	*98915682*
Peracetic acid (PA)	0-2000 ppm	*98915683*
pH	pH 2-12	*98915684*
pH	pH 2-12 tank	*98915685*
ORP	-2000 mV to +2000 mV	*98915686*
ORP	-2000 mV to +2000 mV tank	*98915687*
Conductivity (CND)	1-500000 µS/cm (2-42 PSU)	*98915688*
Conductivity (CND)	1-500000 µS/cm (2-42 PSU) tank	*98915689*
Turbidity	0-800 FTU/NTU	*99852646*
Turbidity Total organic carbon (TOC) Dissolved organic carbon (DOC) UV254 absorption	0-800 FTU/NTU 0-25 mg/l 0-25 mg/l 0-70 Abs/m	*99852649*
Sensor hub for CU382		*99852650*

Maintenance kits for disinfectant sensors

Maintenance kits for disinfectant sensors include a bottle of electrolyte and a membrane cap.

Maintenance kit for parameter	Sensor type[1]	Kit No
Free chlorine (FCl)	E507 1/2	*99074494*
	E520	*99290666*
Total chlorine (TCl)	E507 3/4	*99074495*
	E525	*99290667*
Chlorine dioxide (CDI)		*99074496*
Hydrogen peroxide (HP)		*99074497*
Peracetic acid (PA)		*99074498*

1 Can be found on the sensor

Maintenance kits for pH and ORP sensors

Maintenance kits for pH and ORP sensors include an electrode to replace the one included in the sensor.

Maintenance kit for parameter	Kit No
pH	*99074499*
ORP	*99074500*

Hydraulic connectors for DIDs with bypass flow cell

Description	Kit No
2 x adaptor G 1/2” to connection size G 5/8 2 x connection kit PVC U2 2 x connection kit PVC U7 1 x deaeration spindle for flow cell 1 x nozzle for sample water outlet	*99258903*

KCl solution for safe storage of pH and ORP sensors

Description	Kit No
Bottle of KCl solution for safe storage of pH and ORP sensors, 250 ml	*96688696*

Buffer solution kit for pH sensor calibration

Description	Kit No
Buffer solution kit, 3 x 100 ml (pH 4.01, pH 7 and pH 9.18)	*96609165*

Maintenance kit for bypass flow cell assembly

Maintenance kit	Kit No
PE hose (6/8 mm), 2 m Maintenance kits for bypass flow cell assembly BF1, BF3 and BT4 include a replacement hose. The hose must be cut to the required length.	*95709109*

Maintenance kit for the cleaning assembly for optical sensors

Maintenance kit	Kit No
Spare brush for cleaning assembly Maintenance kits for the cleaning assembly for optical sensors include a spare brush for the cleaning assembly of optical sensors. The replacement frequency depends on the water properties as well as the cleaning intervals and duration.	*99852668*

Photometers

Accessories

Type	Info	Kit No
For DIT-S		
Charger	DIT-S	*98664883*
Electrode pH		*96609164*
Electrode Redox		*96623006*

DIT-S/N/B test reagent

Type	Info	Number of analyses	Kit No
Cl_2 (free or total), O_3, ClO_2		350	*96609167*
ClO_2	Reagent 1	150	*96690369*
Free chlorine	0.03 - 5.0 mg/l	350	*91835797*
pH	pH 6 - 8.5	200	*96609168*
Buffer	Spare, reagent 1		*96693021*
DPD	Spare, reagent 2		*96693042*
KI	Spare, reagent 3		*96693043*

DIT-L test methods and reagents

Method	Parameter	Differentiation	Measuring range	Analyses per PU[1]	Designation	Product number
CL 6	Chlorine, free	Free	0.01 - 6 mg/l Cl_2	250	DPD No. 1 tablets	*95727747*
	Chlorine, free (high Ca)	Free (high Ca)			DPD No 1 high Calcium tablets	*95727748*
	Chlorine, total	Free and combined differentiated			DPD No. 1 tablets or DPD No. 1 high Calcium tablets	*95727747* *95727748*
					DPD No. 3 tablets	*95727750*
	Chlorine, total	Not differentiated			DPD No. 4 tablets	*95727751*
CLO_2	Chlorine dioxide	In absence of Cl_2	0.02 - 11 mg/l ClO_2	250	DPD No. 1 tablets	*95727747*
		In presence of Cl_2			DPD No. 1 tablets	*95727747*
					Glycine tablets	*95727752*
CL 6	Chlorine dioxide analysis[2]	Chlorine dioxide, chlorite, free chlorine, combined chlorine	0.01 - 6 mg/l	250	DPD No. 1 tablets	*95727747*
					DPD No. 3 tablets	*95727750*
					Glycine tablets	*95727752*
				100	DPD acidifying tablets	*98032751*
					DPD neutralising tablets	*98032752*
O_3	Ozone	In absence of Cl_2	0.02 - 2 mg/l O_3	250	DPD No. 1 tablets	*95727747*
					DPD No. 3 tablets	*95727750*
		In presence of Cl_2			DPD No. 1 tablets	*95727747*
					DPD No. 3 tablets	*95727750*
					Glycine tablets	*95727752*
pH	pH value	Phenol red	pH 6.5 - 8.4	250	Phenol red photometer tablets	*95727753*

1 PU = packing unit.

2 The measurements are performed with method "CL6 " as the photometer does not supply a specific method for the determination of these parameters.

DIT-M test methods and reagents

No	Parameter	Differentiation	Measuring range	Analyses per PU	Designation	Product number
40	Aluminium T		0.01 - 0.3 mg/l Al	250	Combi pack Aluminium No. 1/No. 2, 250 tablets each	*95727755*
80	Bromine T		0.05 - 13 mg/l Br	100	DPD No. 1 tablets	*95727761*
100	Chlorine T	Free	0.01 - 6 mg/l Cl_2	250	DPD No. 1 tablets	*95727747*
		Free (high Ca)			DPD No. 1 high Calcium tablets	*95727748*
		Total (free and combined differentiated)			DPD No. 1 tablets or DPD No. 1 high Calcium tablets	*95727747* *95727748*
					DPD No. 3 tablets	*95727750*
		Total (not differentiated)			DPD No. 4 tablets	*95727751*
120	Chlorine dioxide T	Cl_2 and ClO_2 differentiated	0.02 - 11 mg/l ClO_2	250	DPD No. 1 tablets	*95727747*
					DPD No. 3 tablets	*95727750*
					Glycine tablets	*95727752*
		ClO_2 in absence of Cl_2			DPD No. 1 tablets	*95727747*
100	Chlorine dioxide analysis T[1]	Chlorine dioxide, chlorite, free chlorine, combined chlorine	0.01 - 6 mg/l	250	DPD No. 1 tablets	*95727747*
					DPD No. 3 tablets	*95727750*
					Glycine tablets	*95727752*
				100	DPD acidifying tablets	*98032751*
					DPD neutralising tablets	*98032752*
90	Chloride T		0.5 - 25 mg/l (Cl^-)	250	Combi pack chloride T 1/T 2, 250 tablets each	*95727754*
160	Cyanuric acid		2 - 160 mg/l CyA	100	CyA-TEST tablets	*95727760*
220	Iron		0.02 - 1 mg/l Fe	100	Iron LR tablets	*95727756*
170	Fluoride L		0.05 - 2 mg/l F^-	100	SPADNS reagent	*95727757*
					Fluoride standard	*95727758*
240	Manganese T		0.2 - 4 mg/l Mn	100	Combi pack, manganese LR 1/LR 2, 100 tablets each	*95727759*
300	Ozone T	O3 in the presence of Cl2	0.02 - 2 mg/l O_3	250	DPD No. 1 tablets	*95727747*
					DPD No. 3 tablets	*95727750*
					Glycine tablets	*95727752*
		O_3 in absence of Cl_2			DPD No. 1 tablets	*95727747*
					DPD No. 3 tablets	*95727750*
320	Phosphate LR, ortho T		0.05 - 4 mg/l PO_4	100	Combi pack, phosphate No. 1 LR/No. 2 LR, 100 tablets each	*95727764*
210	Hydrogen peroxide T		0.03 - 3 mg/l H_2O_2	100	Hydrogen peroxide LR tablets	*95727762*
330	pH value T		pH 6.5 - 8.4 (phenol red)	250	Phenol red photometer tablets	*95727753*
20	Acid demand to pH 4.3 T		0.1 - 4 mmol/l	100	Alka-M-photometer tablets	*95727763*

[1] The measurements are performed with method "100 Chlorine" and differentiation "free" as the photometer does not supply a specific method for the determination of these parameters.

T = tablet, L = liquide reagent, LR = low range, PU = packing unit.

DIT-L/M liquid reagents

Description	Measuring range	Product number
Kit, liquid reagent chlorine	0.02 – 4 mg/l Cl_2	*99837978*
Spare, DPD No. 1 reagent solution		*99837875*
Spare, DPD No. 1 buffer solution		*99837876*
Spare, DPD No. 3 solution		*99837877*
Spare, phenol red solution	pH 6.5 - 8.4	*99837878*

Release date: 10.2020

http://net.grundfos.com/qr/i/96488862_23

QR96488862_23

24. DP, EF

50/60 Hz

Clamp

Pos.	Description	Frame A	Frame B/C
92	Kit No	*96592050*	*96592054*

Impeller

Pos.	Description	EF				DP		
		0.6 kW	0.9 kW	1.1 kW	1.5 kW	0.9 kW	1.5 kW	2.6 kW
		96115101	*96115109*	*96115102*	*96115103*	*96115104*	*96115105*	*96115106*
9a	Key	1	1	1	1	1	1	1
49	Impeller	1	1	1	1	1	1	1
188a	Screw	1	1	1	1	1	1	1

O-ring

Pos.	Description	0.6 - 1.5 kW		2.6 kW	
		NBR	FKM	NBR	FKM
	Kit No	*96115107*	*96646049*	*96115108*	*96646060*
26a	O-ring	1	1	1	1
37	O-ring	1	1	1	1
37a	O-ring	2	2	2	2
102	O-ring	2	2	2	2
107	O-ring	1	1	1	1
159	O-ring	1	1	1	1
185	O-ring	1	1	1	1
187	O-ring	1	1	1	1
194	Sealing washer	2	2	2	2
198	O-ring	1	1	1	1
-	O-ring 135 x 4 (not used)	1	-	-	-

Shaft seal

Pos.	Description	0.9-1.5 kW		2.6 kW	
		BQQP	BQQV	BQQP	BQQV
	Kit No	*96106536*	*96645161*	*96076123*	*96645275*
9a	Key	1	1	1	1
58	Shaft seal retainer	1	1		
66	Lock washer	1	1	1	1
105a	Shaft seal cartridge	1	1	1	1
106	O-ring	-	-	2	2
107	O-ring	2	2	1	1
112a	Retaining ring	-	-	1	1
153a	Retaining ring	-	-	1	1
188a	Screw M8 x 25	1	1	1	1
194	Sealing washer	2	2	2	2

SmartSeal

Pos.	Description	DN 65		DN 65/80	
	Rubber type	NBR	FKM	NBR	FKM
	Kit No	*96575022*	*96659160*	*96575023*	*96659161*
-	SmartSeal for guide shoe	1	1	1	1

Sphere for hook-up

Pos.	Description	DN 50/Rp 2	
	Rubber type	NBR	FKM
	Kit No	*96592034*	*96657778*
-	Sphere for hook-up	1	1

Upper guide rail holder

Pos.	Description	DN 65/80
	Kit No	*96592037*
-	Upper guide rail holder	1

EF

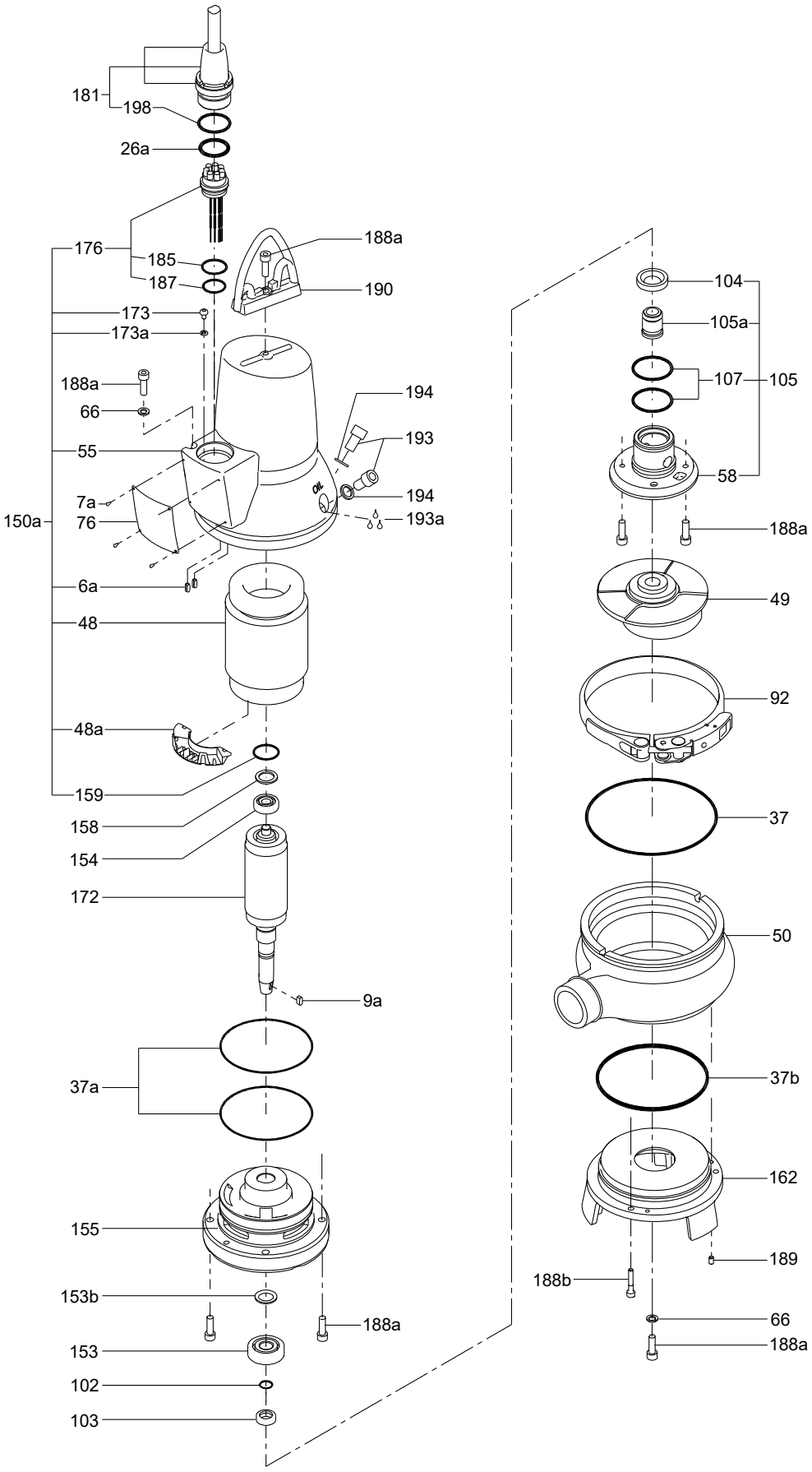
181
198
26a
176
185
187
173
173a
188a
66
55
150a
7a
76
6a
48
48a
159
158
154
172
9a
37a
155
153b
153
102
103
188a
190
194
193
194
193a
104
105a
107
105
58
188a
49
92
37
50
37b
162
189
188b
66
188a
TM027362

DP 2.6 kW

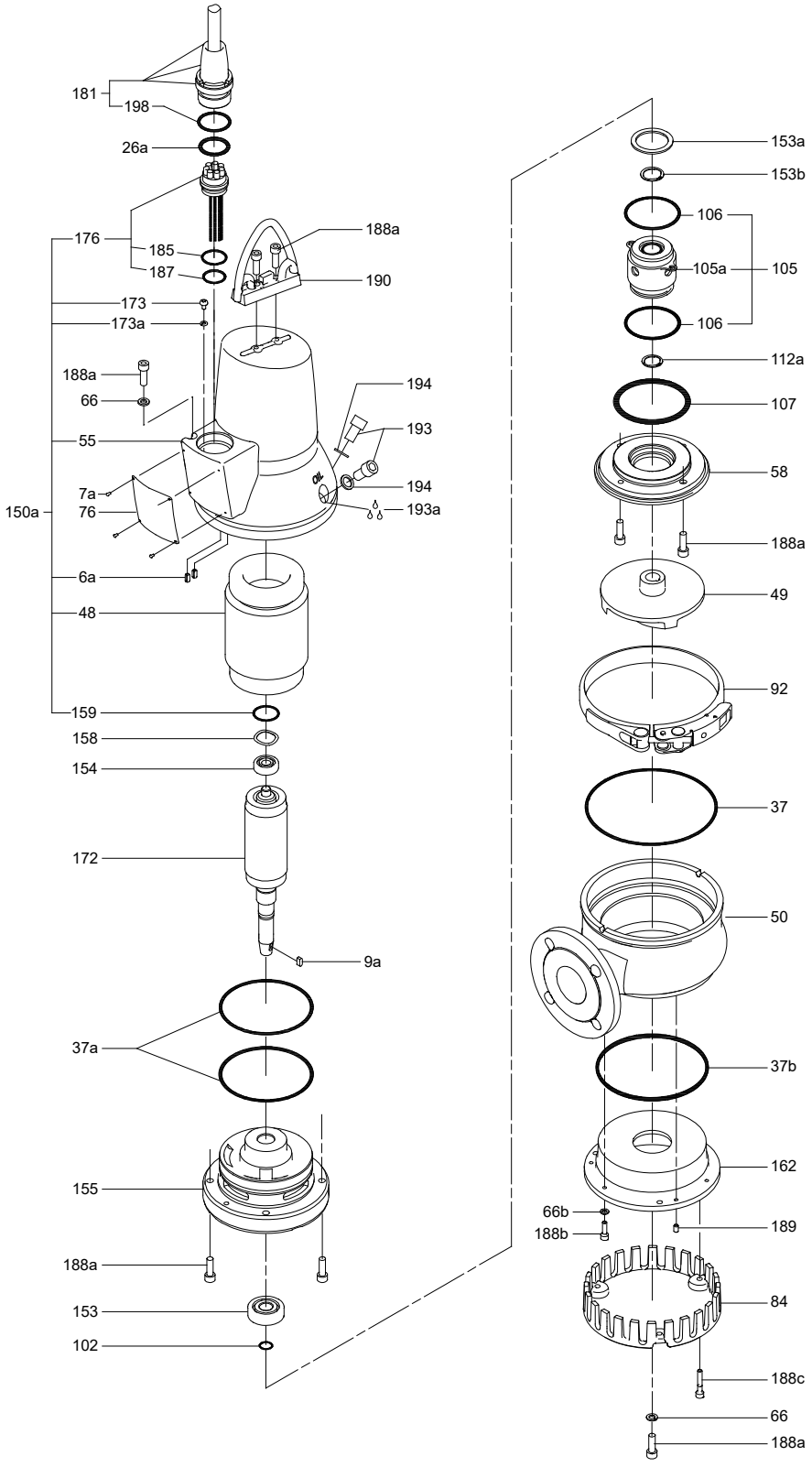
181
198
26a
176
185
187
188a
190
173
173a
188a
66
55
194
193
194
193a
7a
150a
76
6a
48
159
158
154
172
9a
37a
155
188a
153
102
153a
153b
106
105a
105
106
112a
107
58
188a
49
92
37
50
37b
162
66b
188b
189
84
188c
66
188a
TM027232

DP 0.9, 1.5 kW

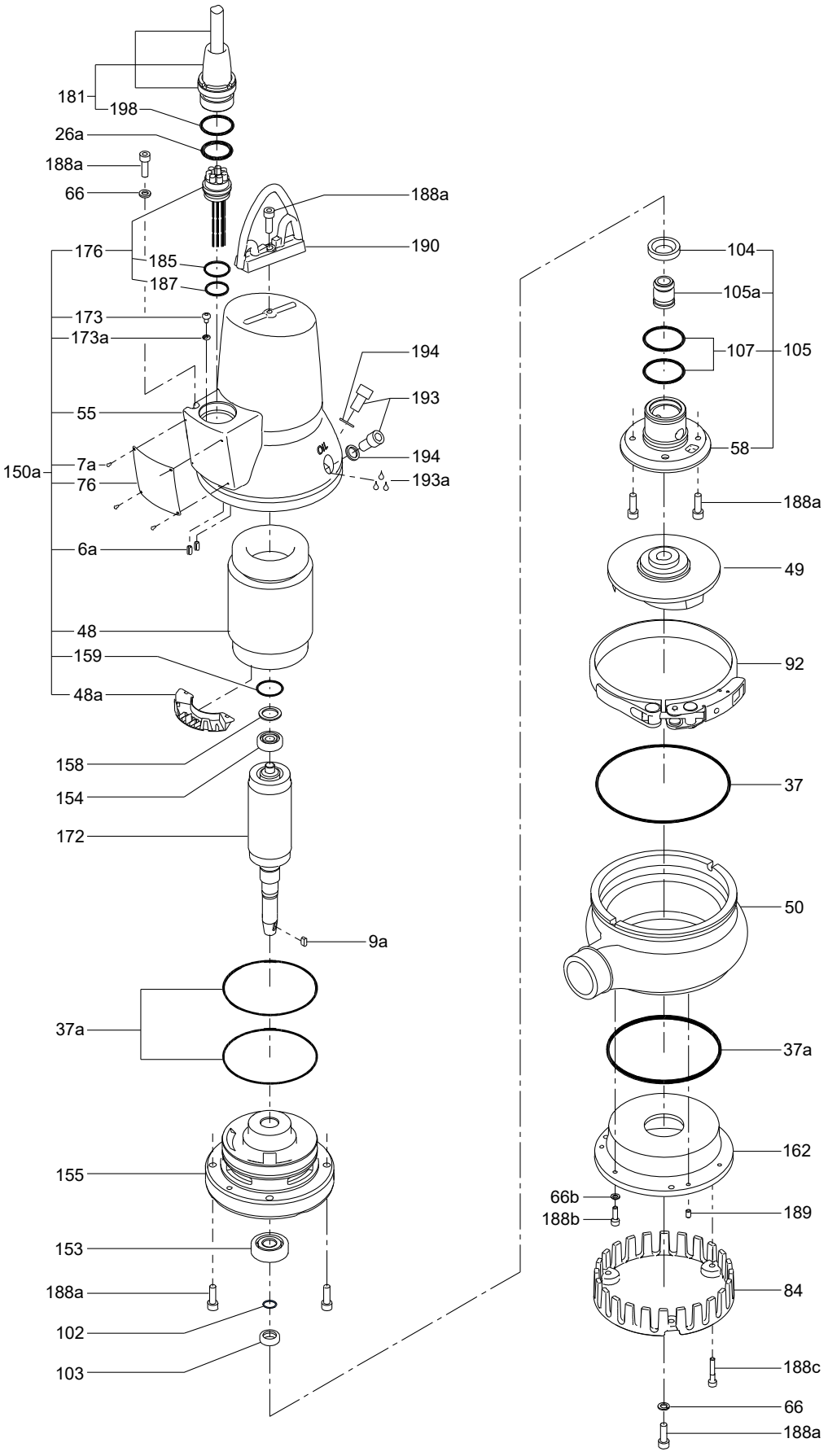
181
198
26a
188a
66
188a
190
176
185
187
173
173a
194
193
55
194
150a
7a
76
193a
6a
48
159
48a
158
154
172
9a
37a
155
153
188a
102
103
104
105a
107
105
58
188a
49
92
37
50
37a
162
66b
188b
189
84
188c
66
188a
TM027229

Bearing

Pos.	Description	Frame	A	B/C
		Kit No	*98682345*	*96690707*
153	Bearing		1	1
154	Bearing		1	1

Cable

Pos.	Description	Length	10		15		20		25	
		Type	Standard	Ex	Standard	Ex	Standard	Ex	Standard	Ex
181	Cable		*96591649*	*96689976*	*96659473*	*96689977*	*96591660*	*96689978*	*96689953*	*96689979*

Guide shoe

Pos.	Description	DN 65		DN 65/80	
		NBR	FKM	NBR	FKM
	Kit No	*96692327*	*96692330*	*96692331*	*96692332*
-	Rubber seal for guide shoe	1	1	1	1
-	Guide shoe	1	1	1	1

Lifting bracket

Pos.	Description	Frame	A	B/C
		Kit No	*96690420*	*96690428*
188a	Screw		1	2
190	Lifting bracket		1	1

EF

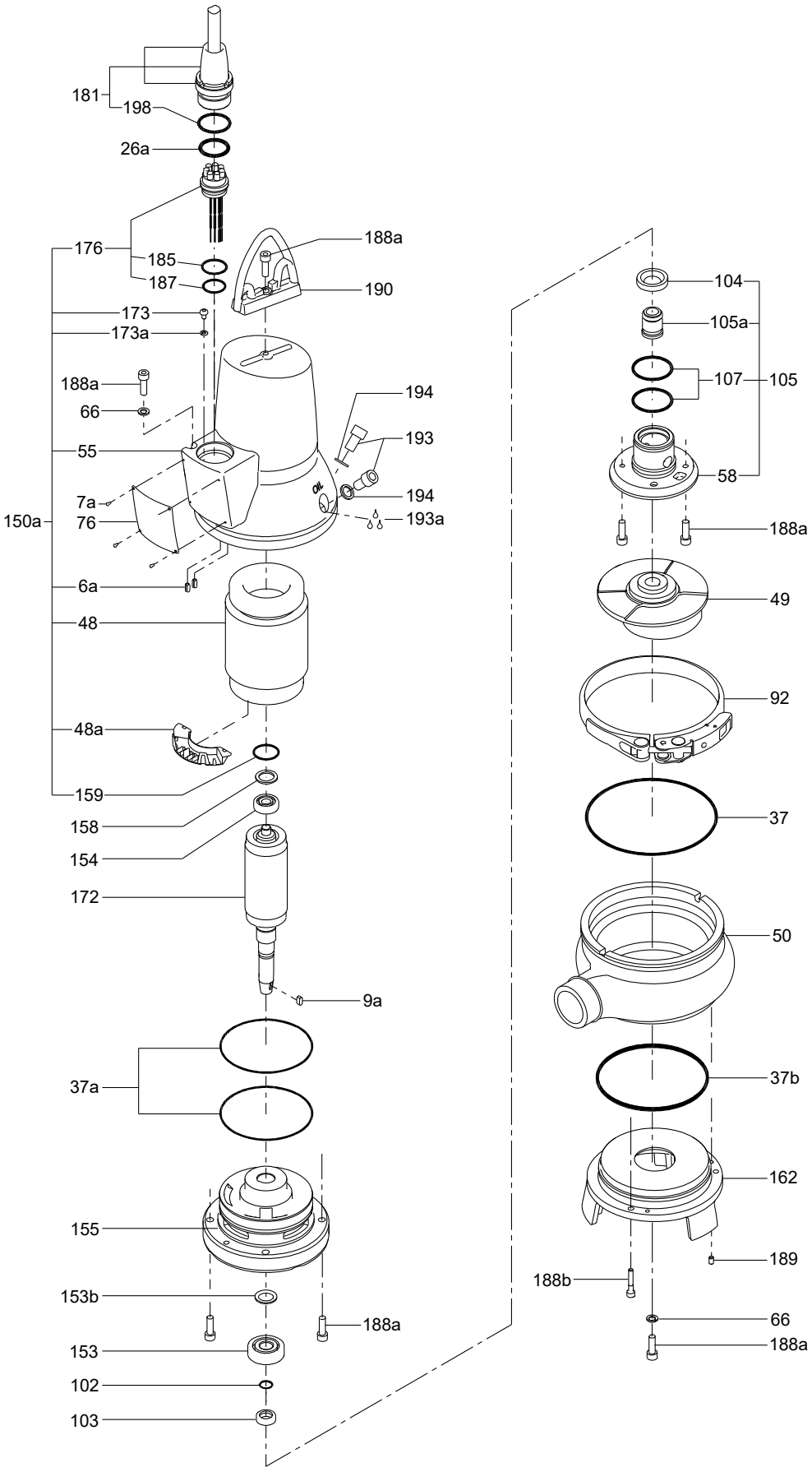
181
198
26a
176
185
187
173
173a
188a
66
55
7a
150a
76
6a
48
48a
159
158
154
172
9a
37a
155
153b
153
102
103
188a
190
194
193
194
193a
104
105a
107
105
58
188a
49
92
37
50
37b
162
189
188b
66
188a
TM027362

DP 2.6 kW

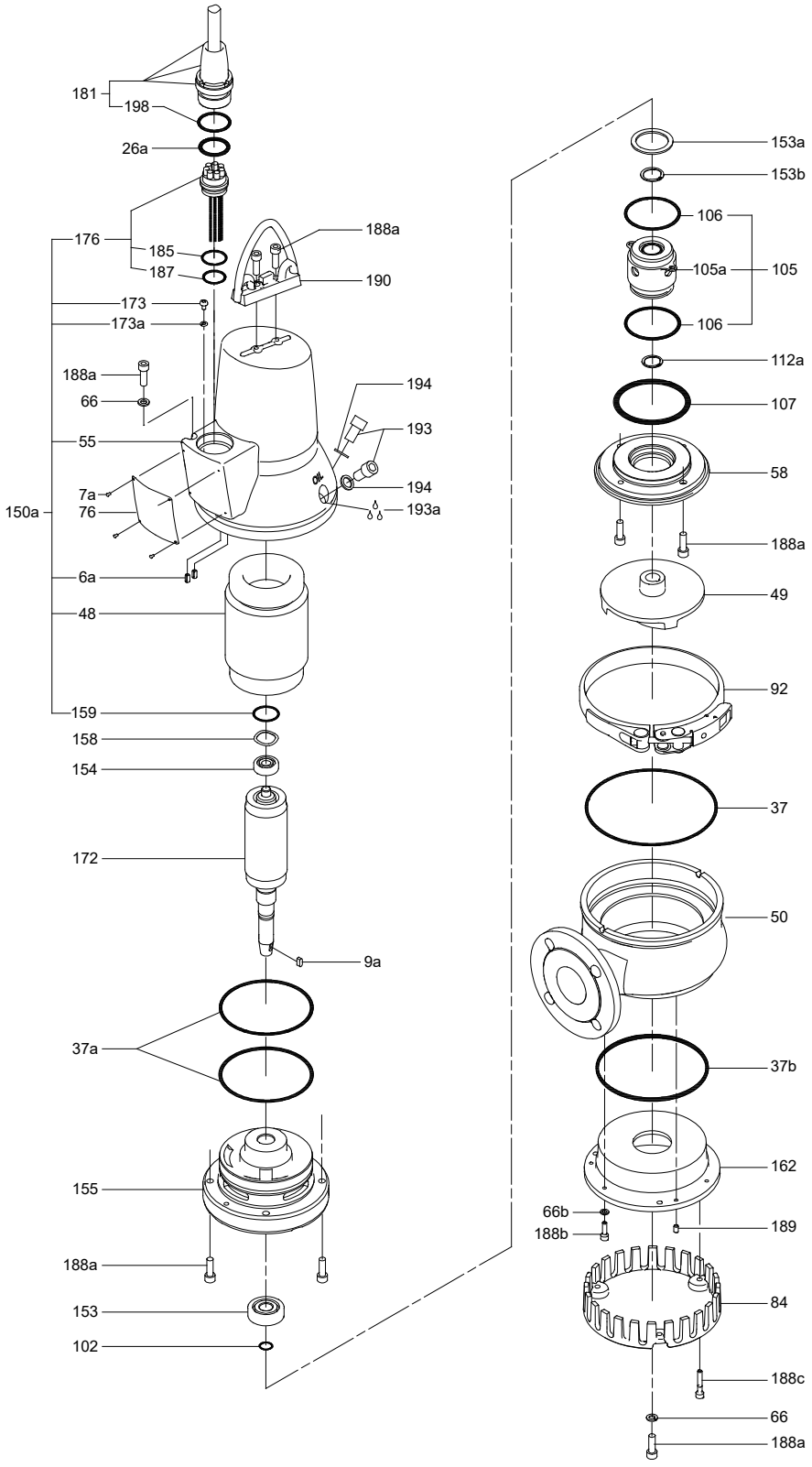
181
198
26a
176
185
187
173
173a
188a
66
55
7a
150a
76
6a
48
159
158
154
172
9a
37a
155
188a
153
102
188a
190
194
193
194
193a
153a
153b
106
105a
105
106
112a
107
58
188a
49
92
37
50
37b
162
66b
188b
189
84
188c
66
188a
TM027232

DP 0.9, 1.5 kW

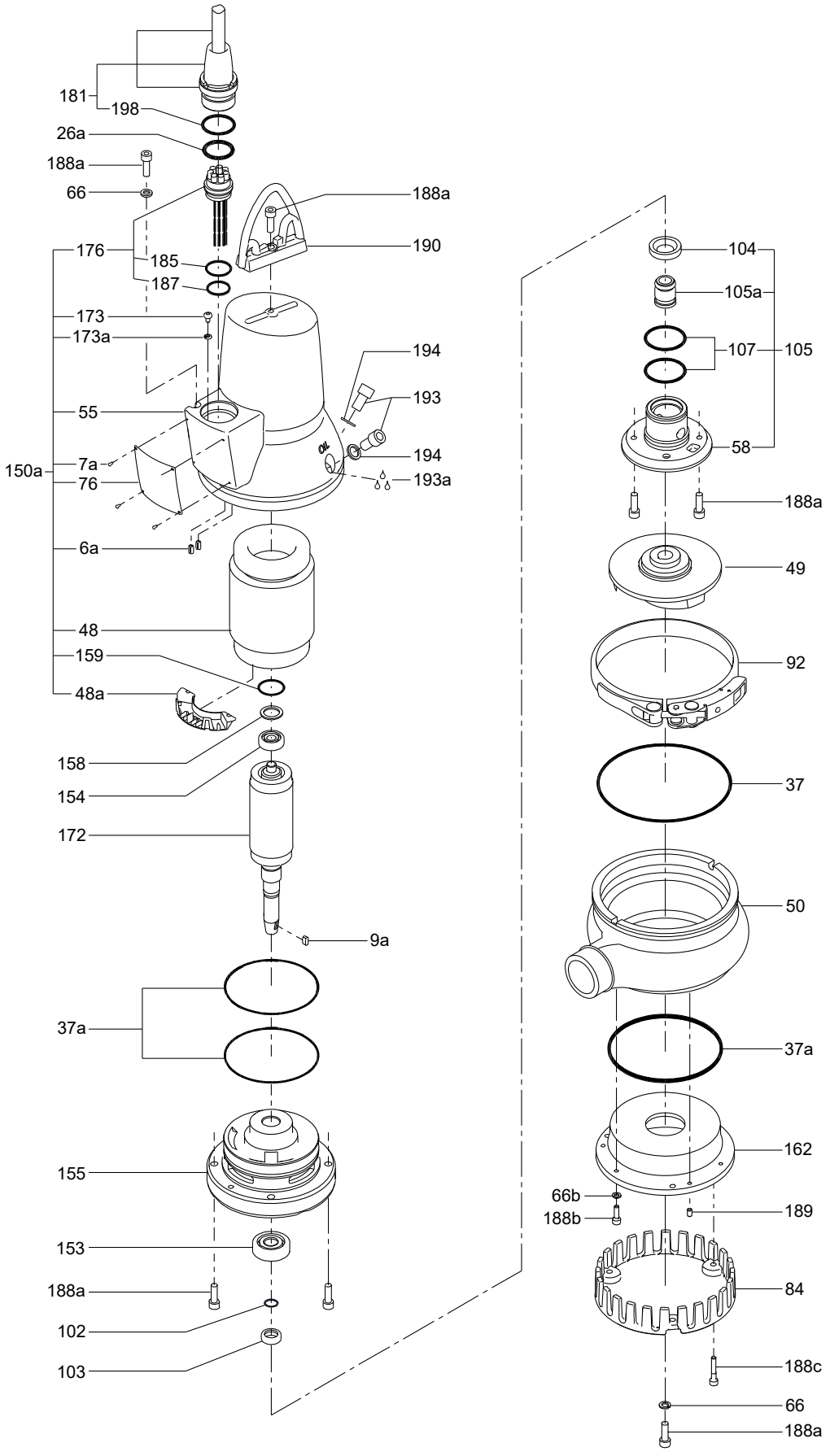
181
198
26a
188a
66
176
185
187
173
173a
55
150a
7a
76
6a
48
159
48a
158
154
172
9a
37a
155
153
188a
102
103
188a
190
194
193
194
193a
104
105a
107
105
58
188a
49
92
37
50
37a
162
66b
188b
189
84
188c
66
188a
TM027229

25. DP, EF AUTOADAPT

50 Hz

Clamp

Pos.	Type	0.6-1.5 kW	2.6 kW
92	Kit No	*96592050*	*96592054*

Impeller

Pos.	Description	EF				DP		
		0.6 kW	0.9 kW	1.1 kW	1.5 kW	0.9 kW	1.5 kW	2.6 kW
	Kit No	*96115101*	*96115109*	*96115102*	*96115103*	*96115104*	*96115105*	*96115106*
9a	Key	1	1	1	1	1	1	1
49	Impeller	1	1	1	1	1	1	1
188a	Screw	1	1	1	1	1	1	1

O-ring

Pos.	Description	0.6 - 1.5 kW		2.6 kW	
		NBR	FKM	NBR	FKM
	Kit No	*96115107*	*96646049*	*96115108*	*96646060*
26a	O-ring	1	1	1	1
37	O-ring	1	1	1	1
37a	O-ring	2	2	2	2
102	O-ring	2	2	2	2
107	O-ring	1	1	1	1
159	O-ring	1	1	1	1
185	O-ring	1	1	1	1
187	O-ring	1	1	1	1
194	Sealing washer	2	2	2	2
198	O-ring	1	1	1	1
532	Silica gel	1	1	1	1

Shaft seal

Pos.	Description	0.6-1.5 kW		2.6 kW	
		BQQP	BQQV	BQQP	BQQV
	Kit No	*96106536*	*96645161*	*96076123*	*96645275*
9a	Key	1	1	1	1
58	Shaft seal retainer	1	1	-	-
66	Lock washer	1	1	1	1
105a	Shaft seal cartridge	1	1	1	1
106	O-ring	-	-	2	2
107	O-ring	2	2	1	1
112a	Retaining ring	-	-	1	1
153a	Retaining ring	-	-	1	1
188a	Screw	1	1	1	1
194	Sealing washer	2	2	2	2

SmartSeal

Pos.	Description	Rp 2"/NPT 2"	DN 65		DN 65/80	
	Rubber type	NBR	NBR	FKM	NBR	FKM
	Kit No	*97771488*	*96575022*	*96659160*	*96575023*	*96659161*
-	SmartSeal for guide shoe	1	1	1	1	1

Sphere for hook-up

Pos.	Description	DN 50/Rp 2"	
	Rubber type	NBR	FKM
	Kit No	*96592034*	*96657778*
-	Sphere for hook-up	1	1

Upper guide rail holder

Pos.	Description	DN 40/Rp 2"	DN 65/80
	Kit No	*96829356*	*96592037*
-	Upper guide rail holder	1	1

EF 0.6 - 1.5 kW

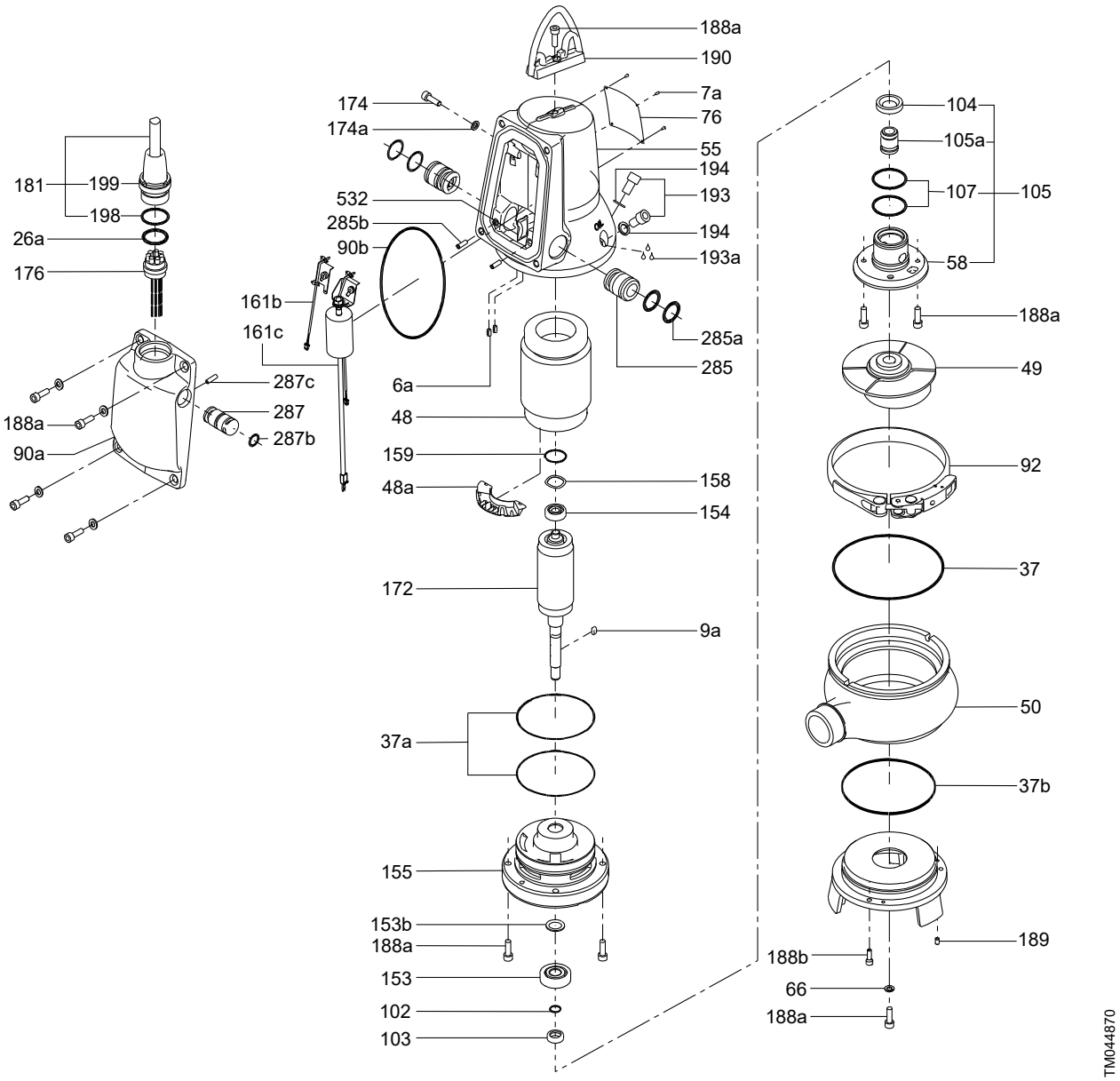
188a
190
174
174a
7a
76
55
194
193
532
285b
90b
194
193a
161b
161c
285a
285
287c
287
287b
188a
90a
6a
48
159
48a
158
154
172
9a
37a
155
153b
188a
153
102
103
104
105a
107
105
58
188a
49
92
37
50
37b
189
188b
66
188a
181
199
198
26a
176
TM044870

DP 2.6 kW

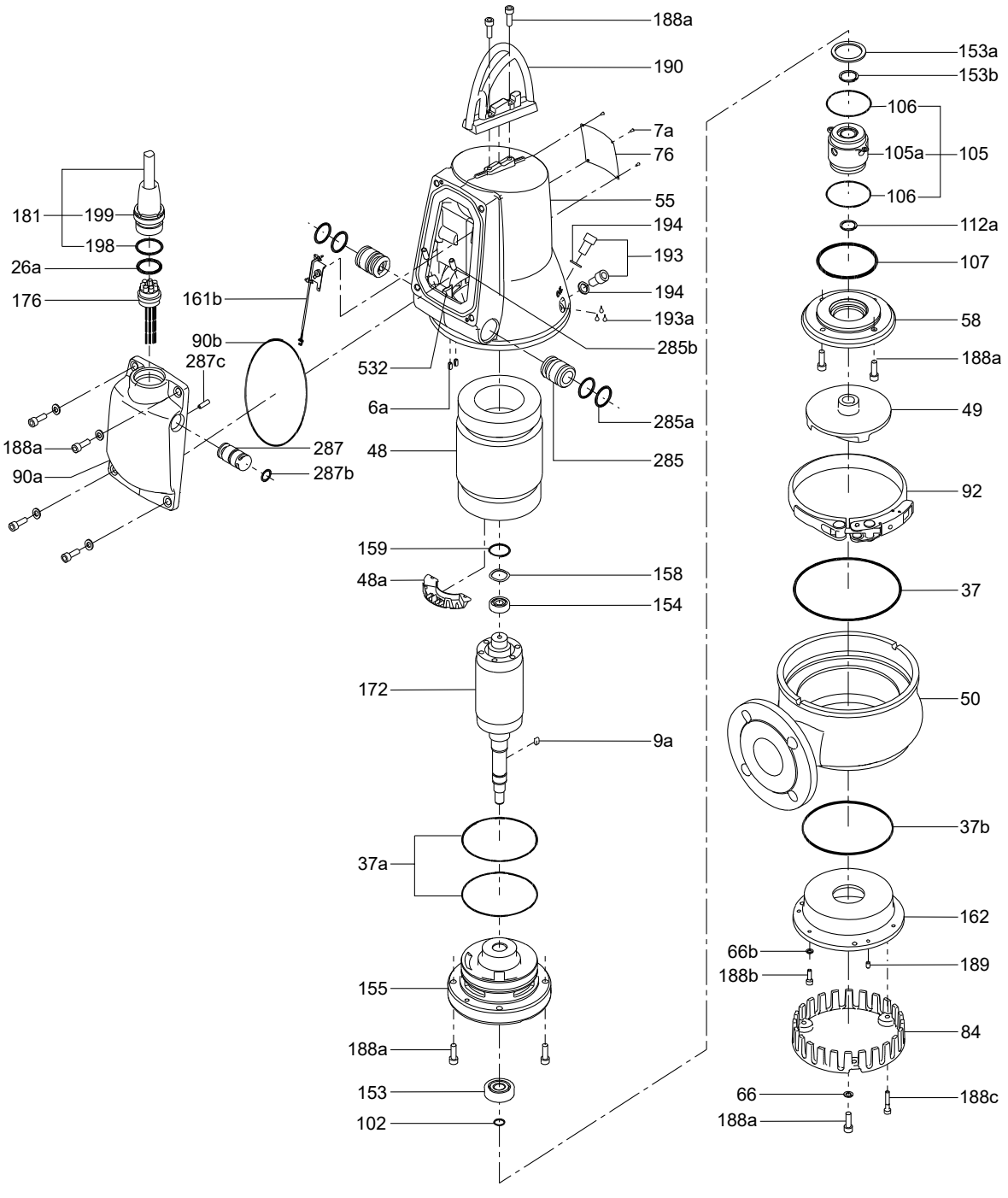
188a
190
7a
76
55
194
193
194
193a
285b
532
6a
48
285a
285
159
48a
158
154
172
9a
37a
155
188a
153
102
181
199
198
26a
176
161b
90b
287c
188a
90a
287
287b
153a
153b
106
105a
105
106
112a
107
58
188a
49
92
37
50
37b
162
66b
188b
189
84
66
188a
188c
TM044869

DP 0.9 - 1.5 kW

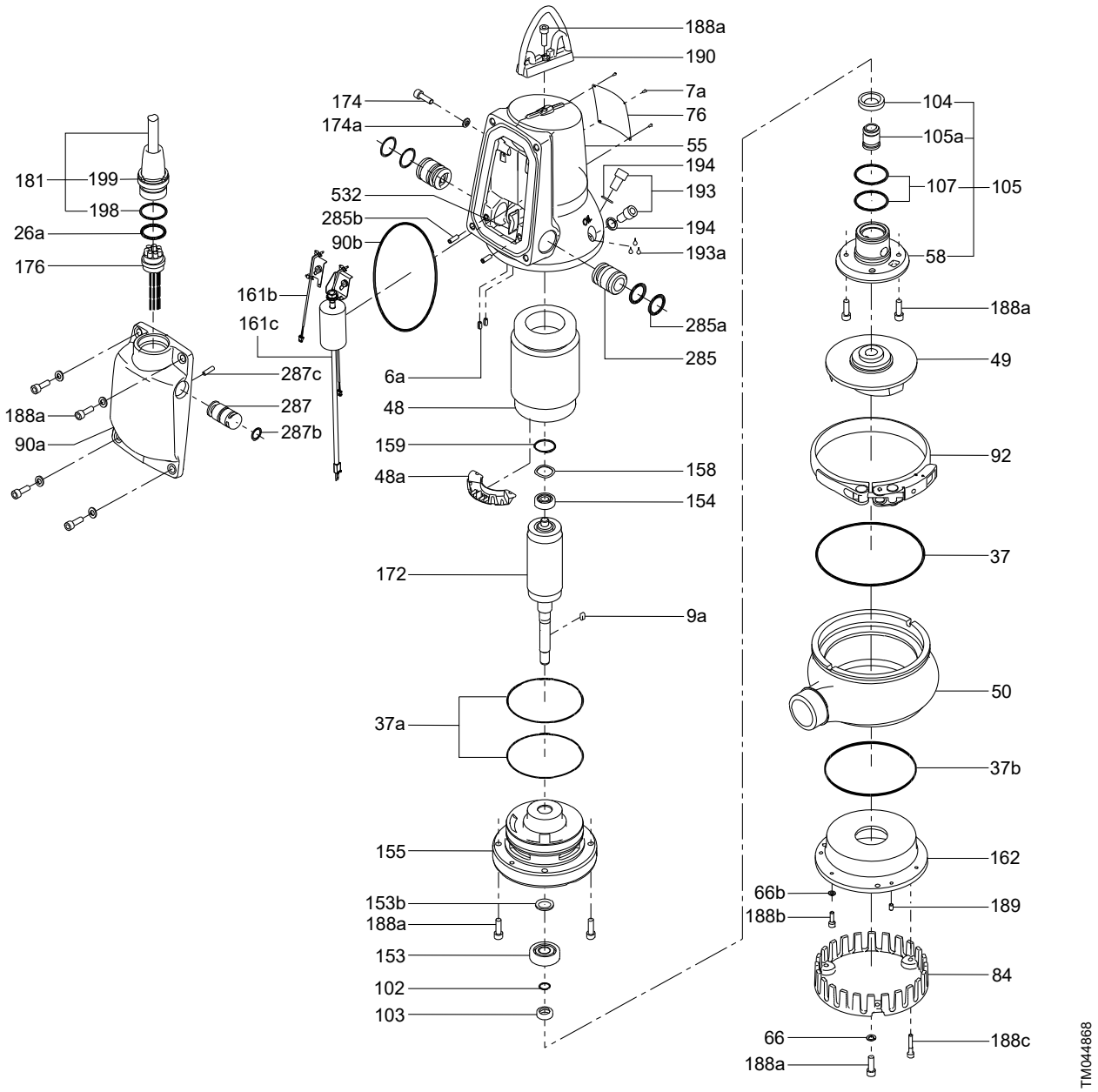
188a
190
174
174a
7a
76
55
194
193
194
193a
532
285b
90b
161b
161c
285a
285
287c
287
287b
188a
90a
6a
48
159
48a
158
154
172
9a
37a
155
153b
188a
153
102
103
104
105a
107
105
58
188a
49
92
37
50
37b
162
66b
188b
189
84
66
188a
188c
TM044868

Bearing

Pos.	Description	Type	0.6-1.5 kW	2.6 kW
		Kit No	*98682345*	*96690707*
153	Bearing		1	1
154	Bearing		1	1

Cable

Pos.	Description	Length	10		15		20		25	
		Type	Standard	Ex	Standard	Ex	Standard	Ex	Standard	Ex
181	Cable		*96591649*	*96689976*	*96659473*	*96689977*	*96591660*	*96689978*	*96689953*	*96689979*

Capacitor and bracket

Pos.	Description	Type	Standard 1-ph.
		Kit No	*96898084*
161c	Capacitor and sensor with bracket		1
90b	O-ring		1

Dry-running sensor

Pos.	Description	Type	Standard	Ex
		Kit No	*96898083*	*96984131*
90b	O-ring		2	2
285	Dry-running sensor		1	1
285a	O-ring		1	1
285b	Set screw for sensor housing		1	1

Electronic controller

Pos.	Description	Type	Standard 1-phase	Ex 1-phase	Standard 3-phase	Ex 3-phase
		2-pole	0.6-1.1 kW	0.6-1.1 kW	0.6-4 kW	0.6-4 kW
		Kit No	*96898085*	*96984145*	*96898086*	*96984146*
26a	O-ring 32 x 4		1	1	1	1
90a	Elecronic unit		1	1	1	1
90b	O-ring 180 x 4		1	1	1	1
198	O-ring 34 x 3		1	1	1	1
287b	O-ring 20 x 3		1	1	1	1
287c	Screw for sensor housing		1	1	1	1

Guide shoe

Pos.	Description	Outlet	Rp 2"	DN 65		DN 65/80	
		Rubber type	NBR	NBR	FKM	NBR	FKM
		Kit No	*97771479*	*96692327*	*96692330*	*96692331*	*96692332*
-	Rubber seal for guide shoe		1	1	1	1	1
-	Guide shoe		1	1	1	1	1

Level sensor

Pos.	Description	Type	Standard	Ex
		Kit No	*96898082*	*96984130*
90b	O-ring		1	1
287	Level sensor		1	1
287b	O-ring		1	1
287c	Set screw for sensor housing		1	1

Lifting bracket

Pos.	Description	Type	0.6-1.5 kW	2.6 kW
		Kit No	*96690420*	*96690428*
188a	Screw		1	2
190	Lifting bracket		1	1

Power plug

Pos.	Description	Type	Standard & Ex
		Kit No	*96984144*
26a	O-ring		1
90b	O-ring		1
176	Plug for power cable		1
198	O-ring		1

PT1000 with bracket

Pos.	Description	Type	Standard 3-ph. & Ex
		Kit No	*97698437*
161b	PT1000 sensor with bracket		1
90b	O-ring		1

EF 0.6 - 1.5 kW

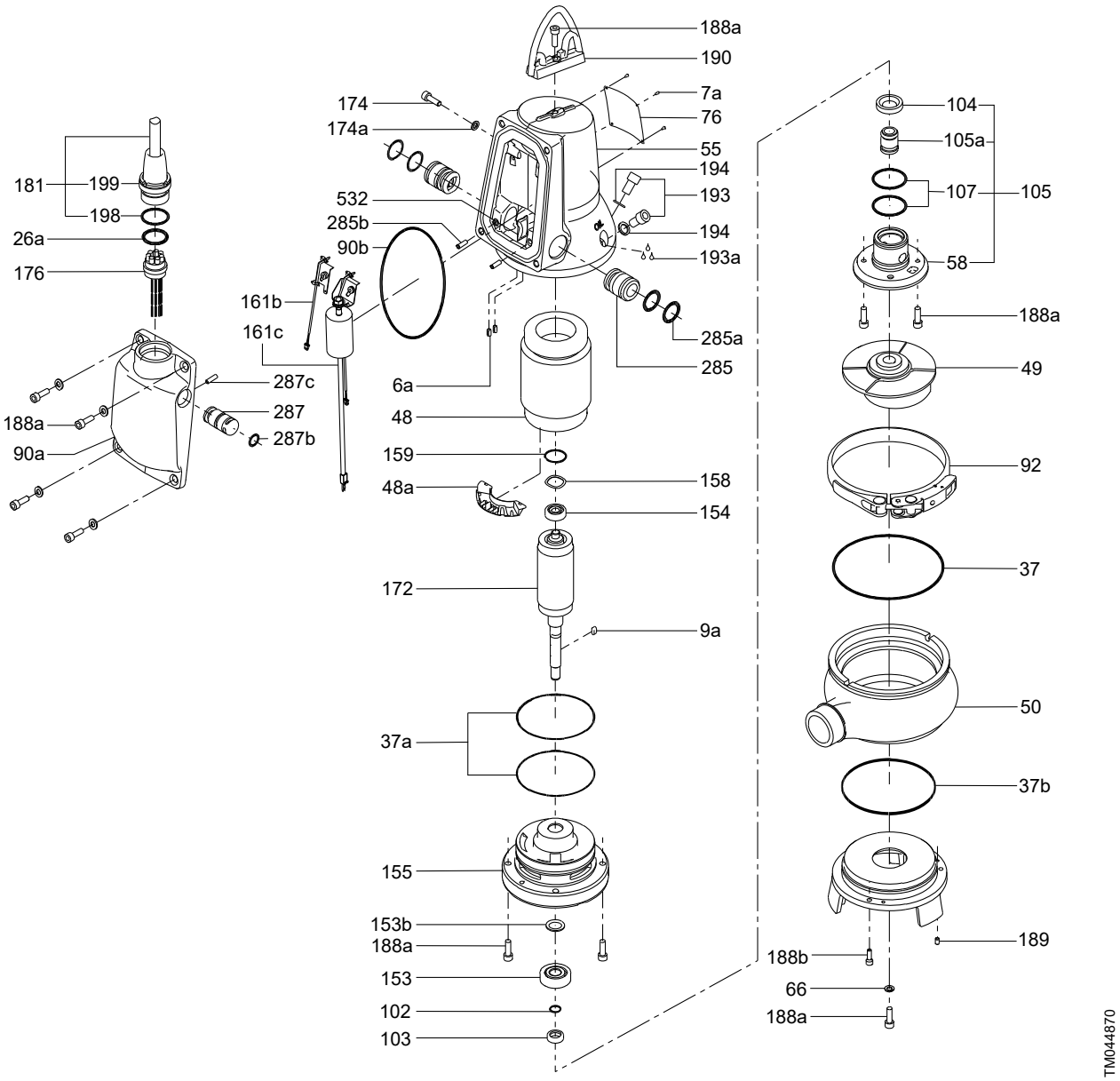
188a
190
174
174a
7a
76
55
194
193
194
193a
532
285b
90b
181
199
198
26a
176
161b
161c
285a
285
287c
287
287b
188a
90a
6a
48
159
48a
158
154
172
9a
37a
155
153b
188a
153
102
103
104
105a
107
105
58
188a
49
92
37
50
37b
189
188b
66
188a
TM044870

DP 2.6 kW

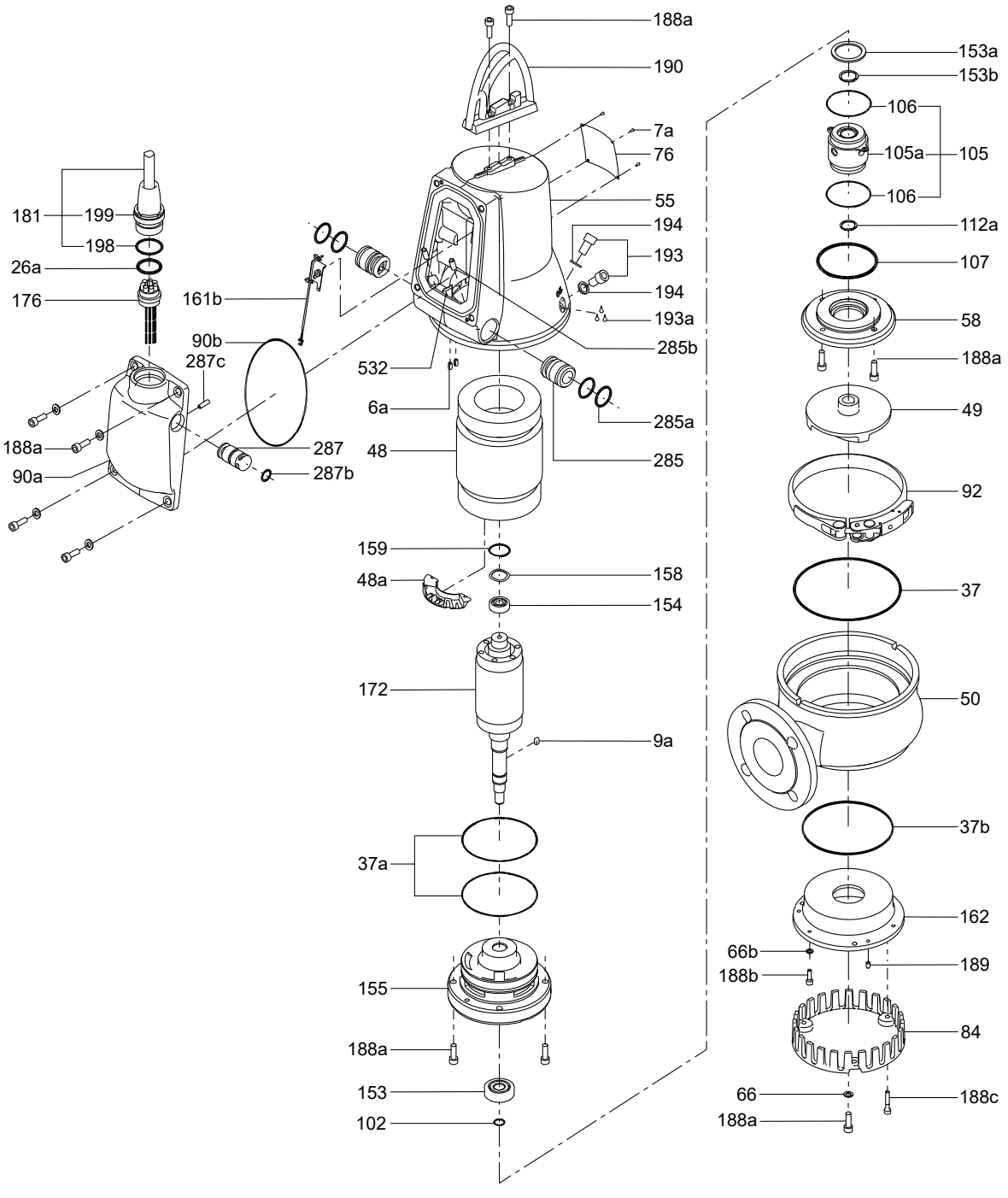
188a
190
7a
76
55
194
193
194
193a
285b
532
6a
285a
48
285
159
158
48a
154
172
9a
37a
155
188a
153
102
181
199
198
26a
176
161b
90b
287c
287
287b
188a
90a
153a
153b
106
105a
105
106
112a
107
58
188a
49
92
37
50
37b
162
66b
189
188b
84
66
188c
188a
TM044869

DP 0.9 - 1.5 kW

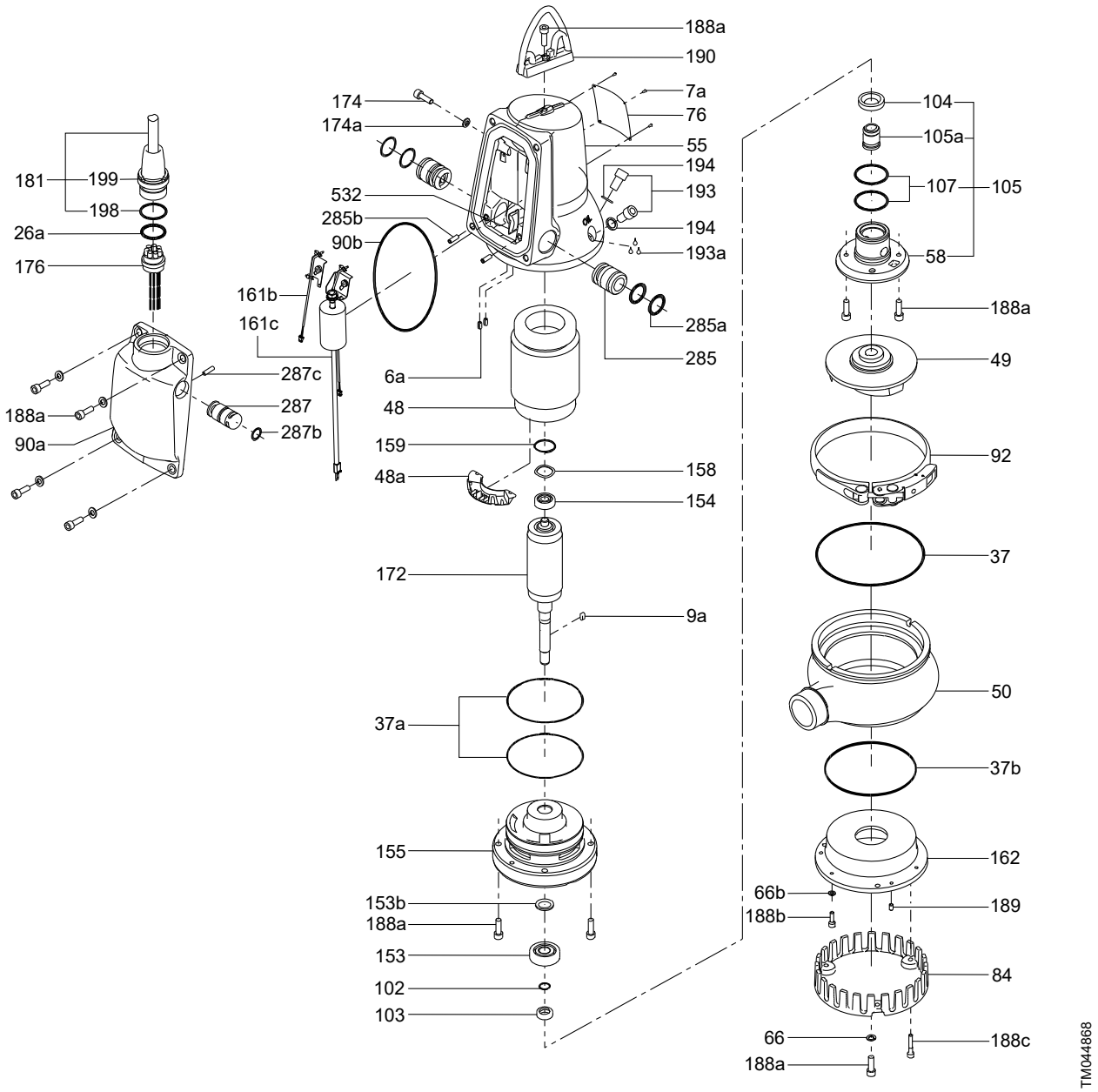
188a
190
174
174a
7a
76
55
194
193
194
193a
532
285b
90b
161b
161c
285a
285
6a
48
159
48a
158
154
172
9a
37a
155
153b
188a
153
102
103
181
199
198
26a
176
287c
287
287b
188a
90a
104
105a
107
105
58
188a
49
92
37
50
37b
162
66b
188b
189
84
66
188a
188c
TM044868

26. DW (APB)

50 Hz

Cable

Pos.	Pump type	1-phase		3-phase						
		DW.50.07		DW.50.08	DW.65.27	DW.100.66H	DW.100.110H		DW.100.200H	
		DW.50.08		DW.50.09	DW.65.39H	DW.100.66	DW.150.110		DW.150.200	
					DW.100.39					
		No plug	Schuko plug					For external control box		For external control box
	Description/ Kit No	*97524480*	*96943648*	*97524527*	*97524493*	*97524494*	*97524495*	*96913693*	*97524496*	*96913693*
23	Rubber plug	-	-	-	2	2	2	-	2	-
75	Washer	-	-	-	1	1	1	2	1	2
76	Rubber bush	-	-	-	1	1	1	2	1	2
77	Washer	-	-	-	-	1	1	2	1	2
80	Cable entry	1	1	1	1	1	1	1	1	1
81	Screw	2	2	2	2	2	2	4	2	4
82	Clamp	1	1	1	1	1	1	2	1	2
85	Motor cable	1	1	1	1	1	1	2	1	2
102	Screw	-	-	-	2	2	2	2	2	2
107	Washer	1	1	1	-	-	-	1	-	1
108	Rubber bush	1	1	1	-	-	-	1	-	1
109	Cable entry	-	-	-	-	-	-	1	-	1
109a	Clamp	-	-	-	-	-	-	1	-	1
109b	Screw	-	-	-	-	-	-	2	-	2
110	Cable sleeve	1	1	1	-	-	-	1	-	1
111	Nut for cable clamp	-	-	-	-	-	-	2	-	2
113	Motor cable	-	-	-	-	-	-	1	-	1
167	O-ring	-	-	-	-	-	-	2	-	2

Cable entry

Pos.	Pump type	DW.50.07	DW.65.27	DW.100.66	DW.100.110H		DW.100.200H	
		DW.50.08	DW.65.39.H	DW.100.66H	DW.150.110		DW.150.200	
		DW.50.09	DW.100.39					
						3-phase, for external control box		3-phase, for external control box
	Description/ Kit No	*96945356*	*96945359*	*96945372*	*96945373*	*96945376*	*96945375*	*96945376*
23	Rubber plug	-	2	2	2	-	2	-
75	Washer	-	2	1	1	2	1	2
76	Rubber bush	-	1	1	1	2	1	2
77	Washer	-	-	1	1	2	1	2
80	Cable entry	1	1	1	1	1	1	1
81	Screw	2	2	2	2	4	2	4
82	Clamp	1	1	1	1	2	1	2
102	Screw	-	2	2	2	2	2	2
107	Washer	1	-	-	-	1	-	1
108	Rubber bush	1	-	-	-	1	-	1
109	Cable entry	-	-	-	-	1	-	1
109a	Clamp	-	-	-	-	1	-	1
109b	Screw	-	-	-	-	2	-	2
110	Cable sleeve	1	-	-	-	1	-	1
111	Nut for cable clamp	-	-	-	-	2	-	2
167	O-ring	-	-	-	-	2	-	2

Discharge port, hose connection

Pos.	Pump type	DW.50.08	DW.50.07	DW.65.27	DW.100.39	DW.100.66	DW.100.110H	DW.150.110
			DW.50.09	DW.65.39.H		DW.100.66H	DW.100.200H	DW.150.200
	Description/Kit No	*96946042*	*96946043*	*96946045*	*96946047*	*96946050*	*96946073*	*96946079*
5	Lock nut	2	2	2	2	2	2	2
6	Washer	2	2	2	2	2	2	2
11	Stud bolts	2	2	2	2	2	2	2
57	Gasket	1	1	1	1	1	1	1
58	Discharge port	1	1	1	1	1	1	1
95	Bracket	1	-	-	-	-	-	-

Discharge port, threaded connection

Pos.	Pump type	DW.50.08	DW.50.07	DW.65.27	DW.100.39	DW.100.66	DW.100.110H	DW.150.110
			DW.50.09	DW.65.39.H		DW.100.66H	DW.100.200H	DW.150.200
	Description/Kit No	*96946081*	*96946082*	*96946083*	*96946084*	*96946085*	*96946086*	*96946088*
5	Lock nut	2	2	2	2	2	2	2
6	Washer	2	2	2	2	2	2	2
11	Stud bolts	2	2	2	2	2	2	2
57	Gasket	1	1	1	1	1	1	1
58	Discharge port	1	1	1	1	1	1	1
95	Bracket	1	-	-	-	-	-	-

Repair kit

		Pump type					
		DW.50.08	DW.50.07	DW.65.27	DW.100.66	DW.100.110.H	DW.100.200.H
			DW.50.09	DW.65.39.H	DW.100.66.H	DW.150.110	DW.150.200
				DW.100.39			
	Kit No	*96957018*	*96957020*	*96957032*	*96957033*	*96957035*	*96957036*
Pos.	**Description**						
16	O-ring	-	2	2	-	-	-
31	Seal ring	-	3	3	3	3	3
32	O-ring	-	1	1	1	1	1
34	O-ring	1	3	5	5	4	4
35	O-ring	-	1	1	1	1	1
39	O-ring	-	-	1	1	1	1
40	Seal ring	-	1	1	1	1	1
41	Retaining ring	1	1	1	1	1	1
42	Washer	-	-	-	-	1	1
44	Washer	-	-	-	-	1	1
45	Seal washer	-	3	3	3	5	5
49	O-ring	1	2	2	2	1	2
50	O-ring	-	-	-	-	-	1
51	O-ring	2	-	-	-	1	2
55	O-ring	1	1	1	1	1	1
57	Gasket/O-ring	1	1	1	1	1	1
61	O-ring	-	-	-	-	1	1
66	O-ring	-	1	1	1	1	1
68	Rubber cap	-	1	1	1	1	1
72	Valve rubber	-	1	1	1	1	1
76	Rubber bush	-	-	1	1	2	1
76	Rubber bush	-	-	-	-	-	2
78	O-ring	-	2	2	2	2	2
82	Clamp	1	1	1	1	2	2
83	O-ring	-	2	2	2	2	2
86	Valve cap	-	1	1	1	1	1
87	Bow	-	-	-	-	1	1
105	Retaining ring	-	-	-	-	1	1
108	Rubber bush	1	1	-	-	1	1
110	Cable sleeve	1	1	-	-	-	-
114	Seal washer	-	1	1	1	-	-
119	Key	-	-	-	2	-	-
128	Retaining ring	-	1	-	-	-	-
136	Pipe plug	1	-	-	-	-	-
139	Rubber gasket	1	-	-	-	-	-
142	Cable sleeve	1	-	-	-	-	-
146	Rubber bush	1	-	-	-	-	-
147	Grease nipple	1	-	-	-	-	-
148	Cover	1	-	-	-	-	-
150	O-ring	1	-	-	-	-	-
167	O-ring	-	-	-	-	2	2

Impeller

Pos.	Pump type	DW.50.08	DW.50.07	DW.50.09	DW.65.27	DW.65.39.H	DW.100.39
	Description/ Kit No	*97524525*	*97524500*	*97524511*	*97524512*	*97524514*	*97524515*
12	Impeller screw rubber plug	-	1	1	1	1	1
14	Impeller screw	-	1	1	1	1	1
15	Washer	-	1	1	1	1	1
16	O-rings	-	2	2	2	2	2
18	Impeller	1	1	1	1	1	1
18	Impeller	-	-		-	-	-
21	Split bush, long, split cone	-	1	1	1	1	1
119	Key	-	-	-	-	-	-
119	Key	-	-	-	-	-	-
121	Impeller nut	2	-	-	-	-	-
165	Disc	-	-	-	-	-	-

Pos.	Pump type	DW.100.66	DW.100.66H	DW.100.110H	DW.150.110	DW.100.200H	DW.150.200
	Description/Kit No	*97524519*	*97524521*	*97524498*	*97524522*	*97524499*	*97524524*
12	Impeller screw rubber plug	-	-	1	1	1	1
14	Impeller screw	-	-	1	1	1	1
15	Washer	1	1	1	1	1	1
16	Spacer	-	2	-	-	-	-
17	Split bush, short	-	-	1	-	1	-
18	Impeller	1	1	1	1	1	1
18	Impeller	-	1	1	-	1	-
21	Split bush, long, split cone	-	-	1	1	1	1
119	Key	1	1	-	-	-	-
119	Key	-	1	-	-	-	-
121	Impeller nut	1	1	-	-	-	-
165	Disc	2	2	-	-	-	-

Shaft seal

Pos.	Pump type	DW.50.08	DW.50.07	DW.65.27	DW.100.110H
			DW.50.09	DW.65.39.H	DW.150.110
				DW.100.39	DW.100.200H
				DW.100.66	DW.150.200
				DW.100.66H	
	Description/Kit No	*96956225*	*96956226*	*96956227*	*96956228*
31	Fibre ring	-	3	3	3
34	O-rings	1	1	1	1
37	Primary shaft seal	1	1	1	1
39	O-ring	-	-	1	1
40	Seal ring	-	1	1	-
45	Washer	-	-	-	2
103	Lower shaft seal	-	-	-	1
105	Retaining ring	-	-	-	1
114	Seal washer	-	1	1	-
132	Spacer	4	-	-	-
148	Cover	1	-	-	-
150	V-ring	1	-	-	-

Wear parts

Pos.	Pump type	DW.50.08	DW.50.07 DW.50.09	DW.65.27	DW.65.39.H	DW.100.39
	Description/Kit No	*96956242*	*96956243*	*96956244*	*96956245*	*96956246*
19	Diffuser	1	1	1	1	1
28	Impeller disc	1	1	1	1	1
29	Rubber lining	-	1	1	1	1
32	O-ring	-	1	1	1	1

Pos.	Pump type	DW.100.66	DW.100.66H	DW.100.110H	DW.150.110	DW.100.200H	DW.150.200
	Description/Kit No	*96956247*	*96956248*	*96956249*	*96956251*	*96956263*	*96956264*
8	Diffuser inlet	-	-	-	-	-	1
13	Diffuser, second	-	1	1	-	1	-
19	Diffuser	1	1	1	1	1	1
22	Impeller disc, second	-	-	1	-	1	-
25	Sealing	-	-	-	-	1	-
28	Impeller disc	1	1	1	1	1	1
29	Rubber lining	1	1	1	1	1	1
32	O-ring	1	1	1	1	1	1
120	Supporting ring	-	1	-	-	-	-
168	O-ring	-	-	-	-	1	-

Electrode

Pos.	Pump type	DW.50.07 DW.50.09 DW.65.27 DW.65.39.H DW.100.39 DW.100.66 DW.100.66H DW.100.110H DW.150.110 DW.100.200H DW.150.200
	Description/Kit No	*97524477*
35	O-ring (electrode seat)	1
60	Spring pin	1
66	O-ring (electrode)	1
67	Electrode unit	1
68	Rubber cap	1

Valve

Pos.	Pump type	DW.50.07 DW.50.09	DW.65.27 DW.65.39.H DW.100.39 DW.100.66 DW.100.66H	DW.100.110H DW.150.110 DW.100.200H DW.150.200
	Description/Kit No	*97524384*	*97524466*	*97524471*
72	Valve rubber	1	1	1
78	O-ring	2	2	2
79	Valve body	1	1	1
86	Valve cap	1	1	1
87	Bow	-	-	1
88	Screw	-	-	1

Float switch

Pos.	Pump type	DW.50.08
	Description/Kit No	*96956173*
129	Holder	1
138	Washer	1
141	Level control	1
142	Cable sleeve	1
143	Cable entry unit complete	1
146	Rubber bush	1

DW.50.08

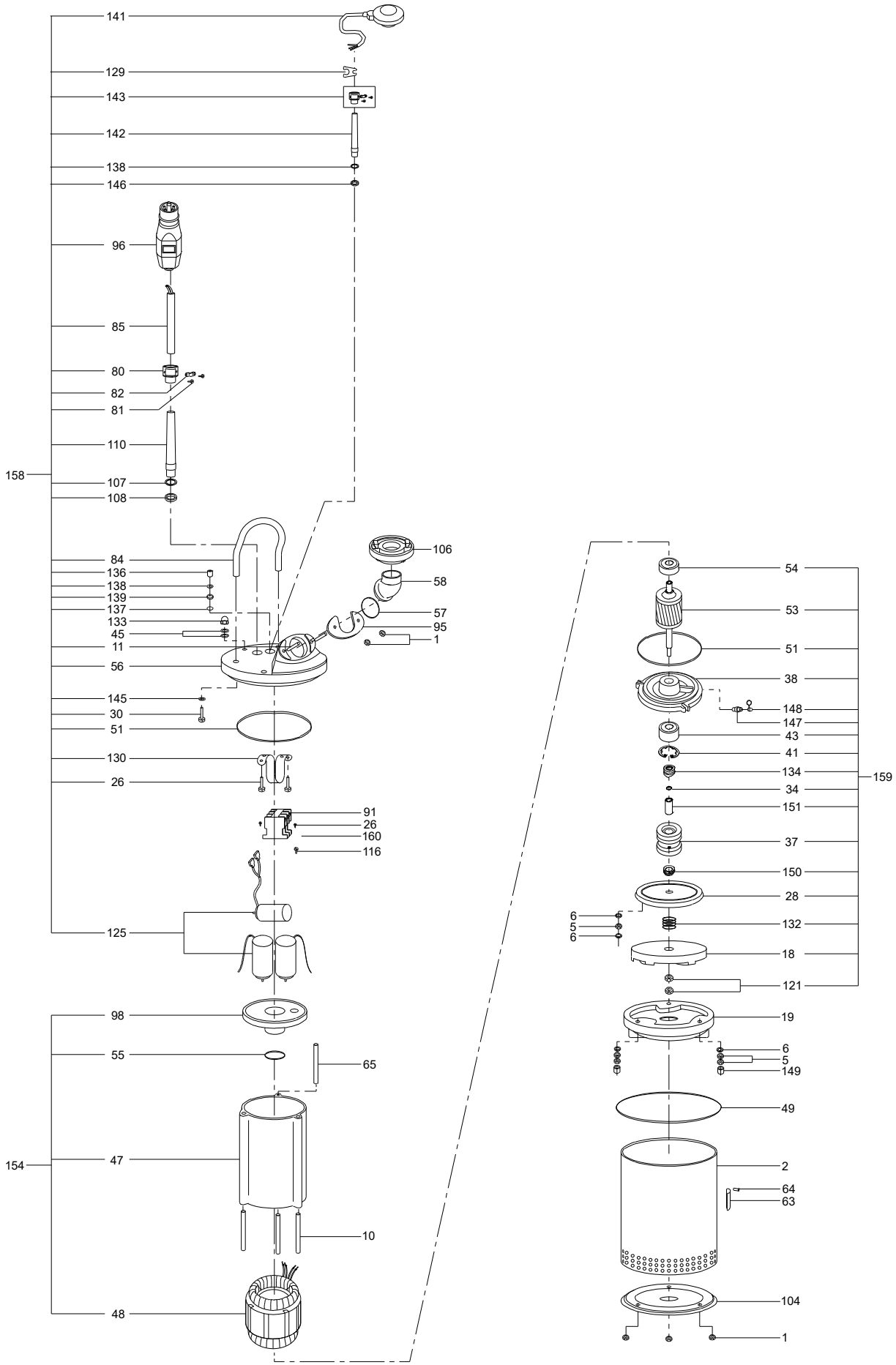
141
129
143
142
138
146
96
85
80
82
81
110
158
107
108
84
136
138
139
137
133
45
11
56
145
30
51
130
26
106
58
57
95
1
91
26
160
116
125
98
55
65
154
47
10
48
54
53
51
38
148
147
43
41
134
34
151
37
150
28
132
18
121
159
19
6
5
149
49
2
64
63
104
1
6
5
6
TM021861

DW.50.07/09

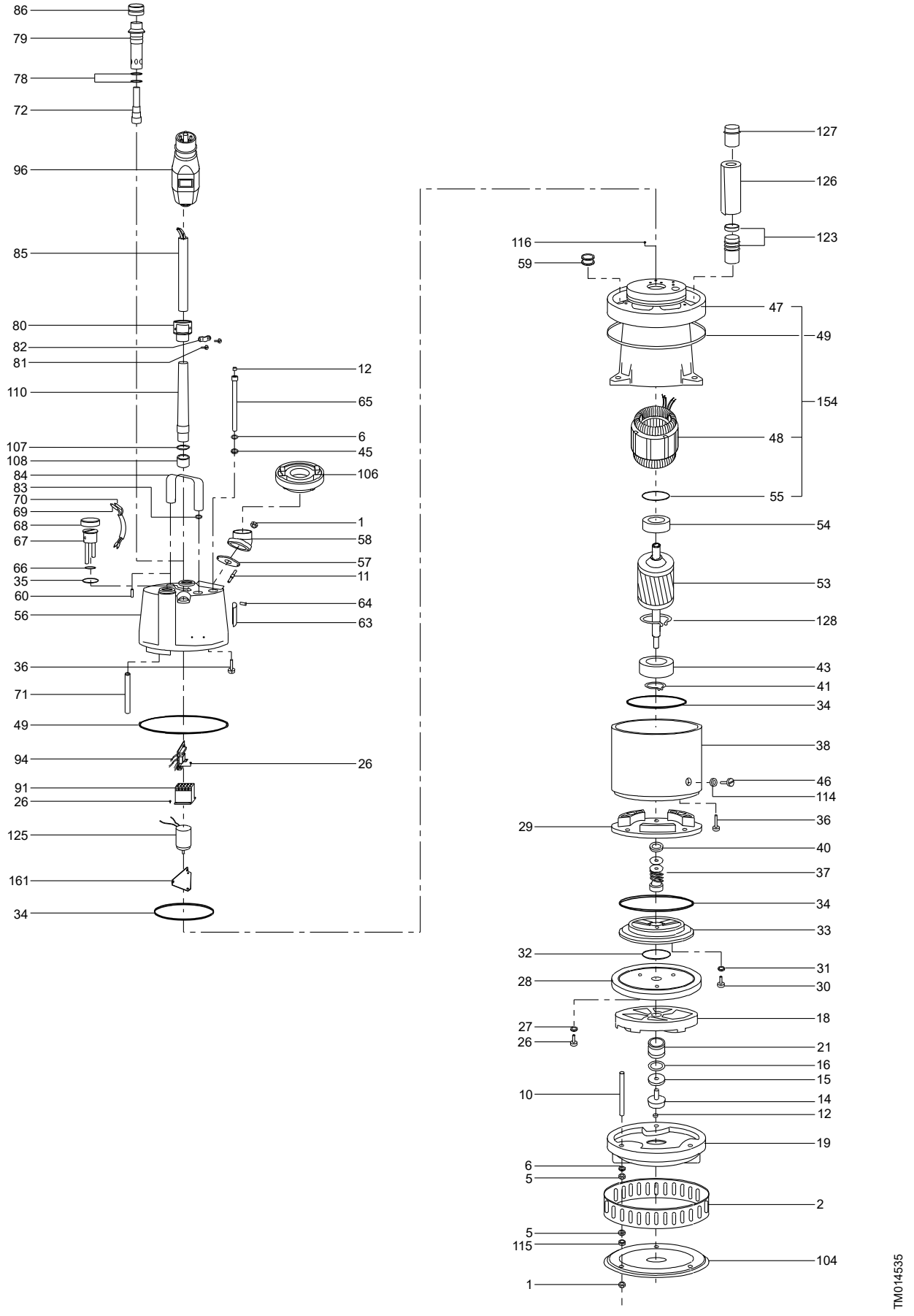
86
79
78
72
96
85
80
82
81
110
107
108
84
83
70
69
68
67
66
35
60
56
36
71
49
94
91
26
125
161
34
12
65
6
45
106
1
58
57
11
64
63
26
127
126
123
116
59
47
49
154
48
55
54
53
128
43
41
34
38
46
114
36
29
40
37
34
33
32
31
28
30
27
18
26
21
16
15
10
14
12
19
6
5
2
5
115
104
1
TM014535

DW.65.27

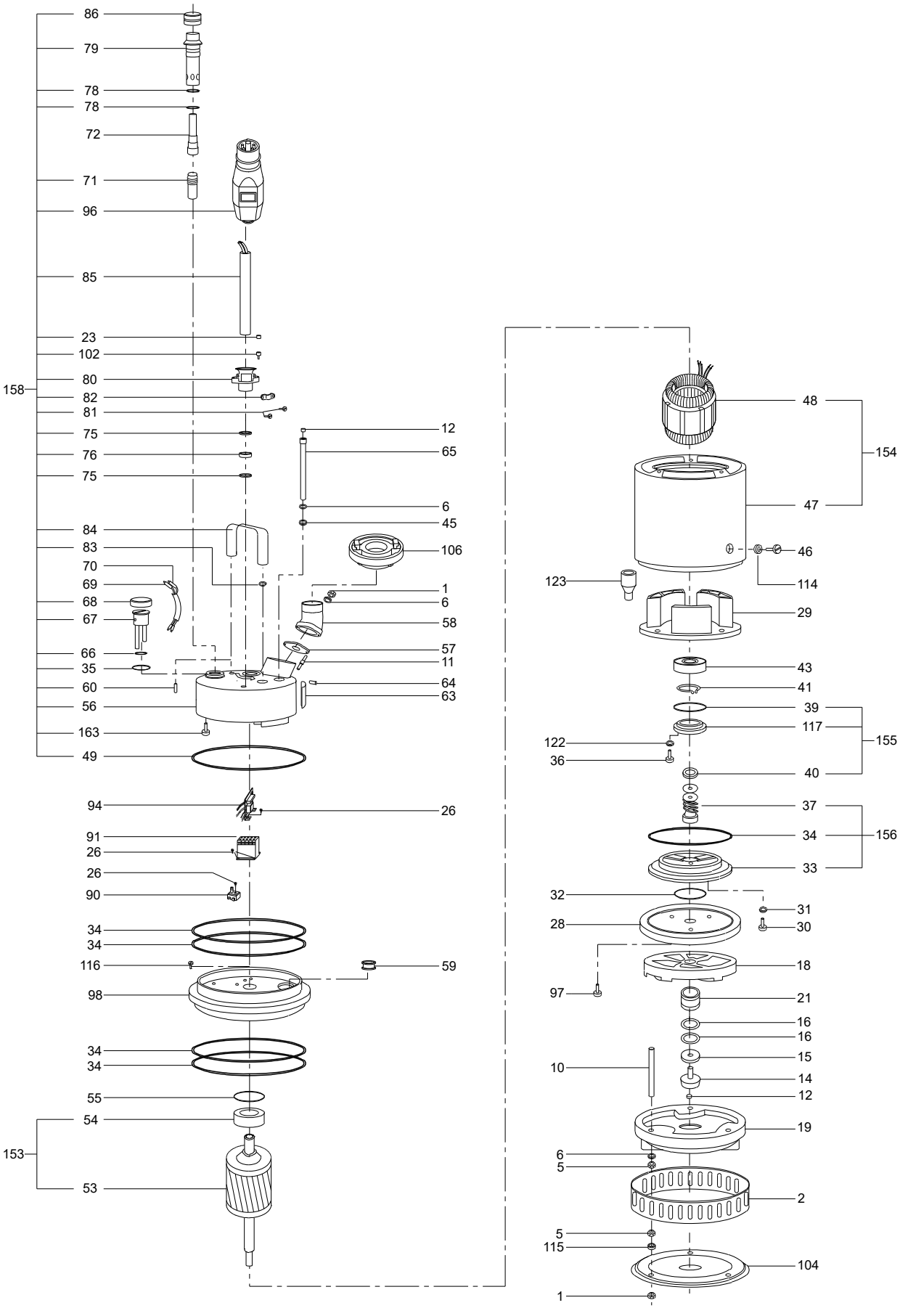
86
79
78
78
72
71
96
85
23
102
158
80
82
81
75
76
75
84
83
70
69
68
67
66
35
60
56
163
49
94
91
26
26
90
34
34
116
98
34
34
55
54
153
53
12
65
6
45
106
1
6
58
57
11
64
63
26
59
48
154
47
46
123
114
29
43
41
39
117
122
36
155
40
37
34
156
33
32
31
28
30
18
97
21
16
16
15
10
14
12
19
6
5
2
5
115
104
1
TM014536

DW.65.39H/100.39

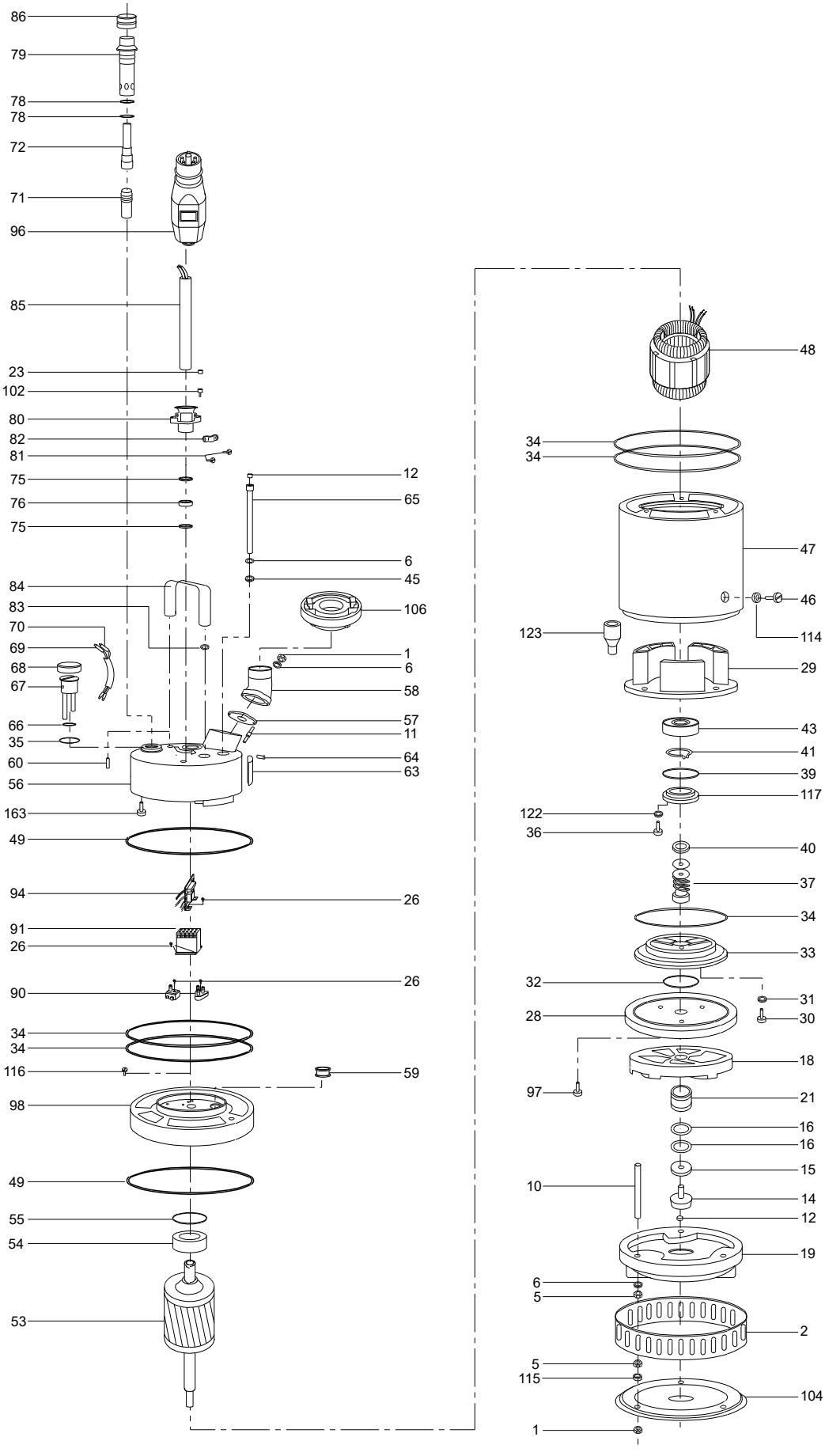

TM014540

DW.100.66 (H)

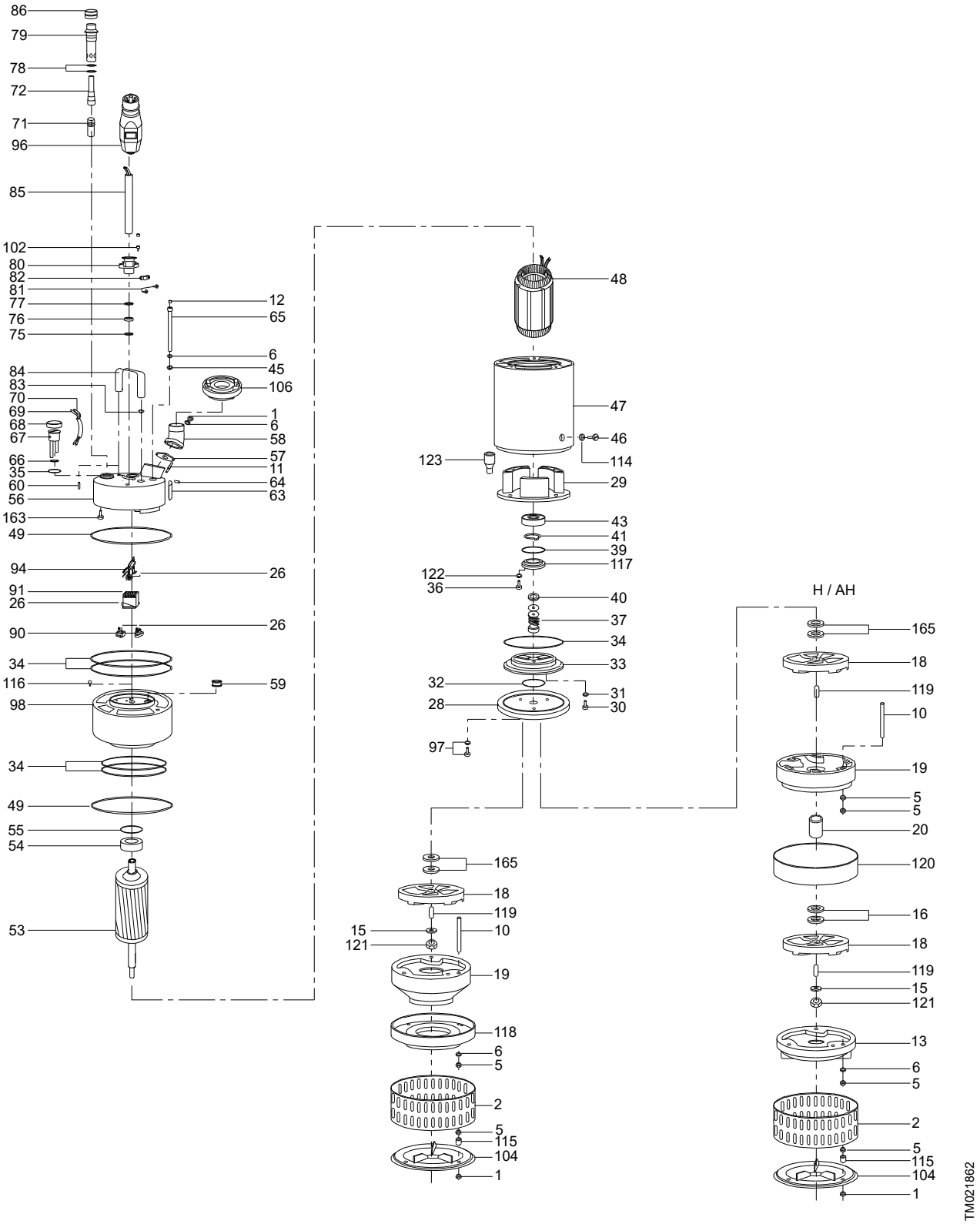
86
79
78
72
71
96
85
102
80
82
81
77
76
75
84
83
70
69
68
67
66
35
60
56
163
49
94
91
26
90
34
116
98
34
49
55
54
53
12
65
6
45
106
1
6
58
57
11
64
63
26
26
59
48
47
46
114
123
29
43
41
39
117
122
36
40
37
34
33
32
31
28
30
97
165
18
119
15
10
121
19
118
6
5
2
5
115
104
1
H / AH
165
18
119
10
19
5
5
20
120
16
18
119
15
121
13
6
5
2
5
115
104
1
TM021862

DW.100.110H/150.110

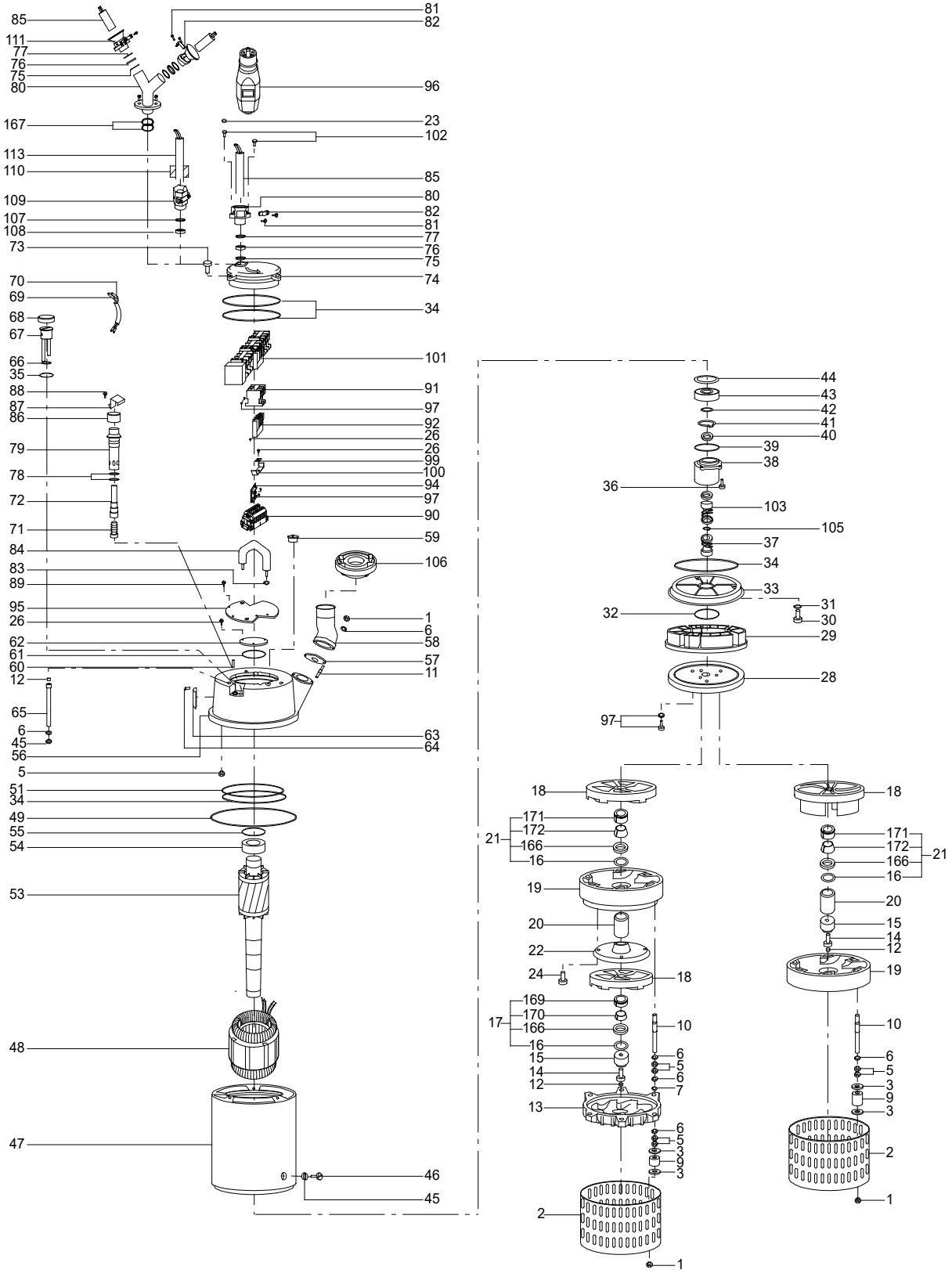

DW.100.200H/150.200

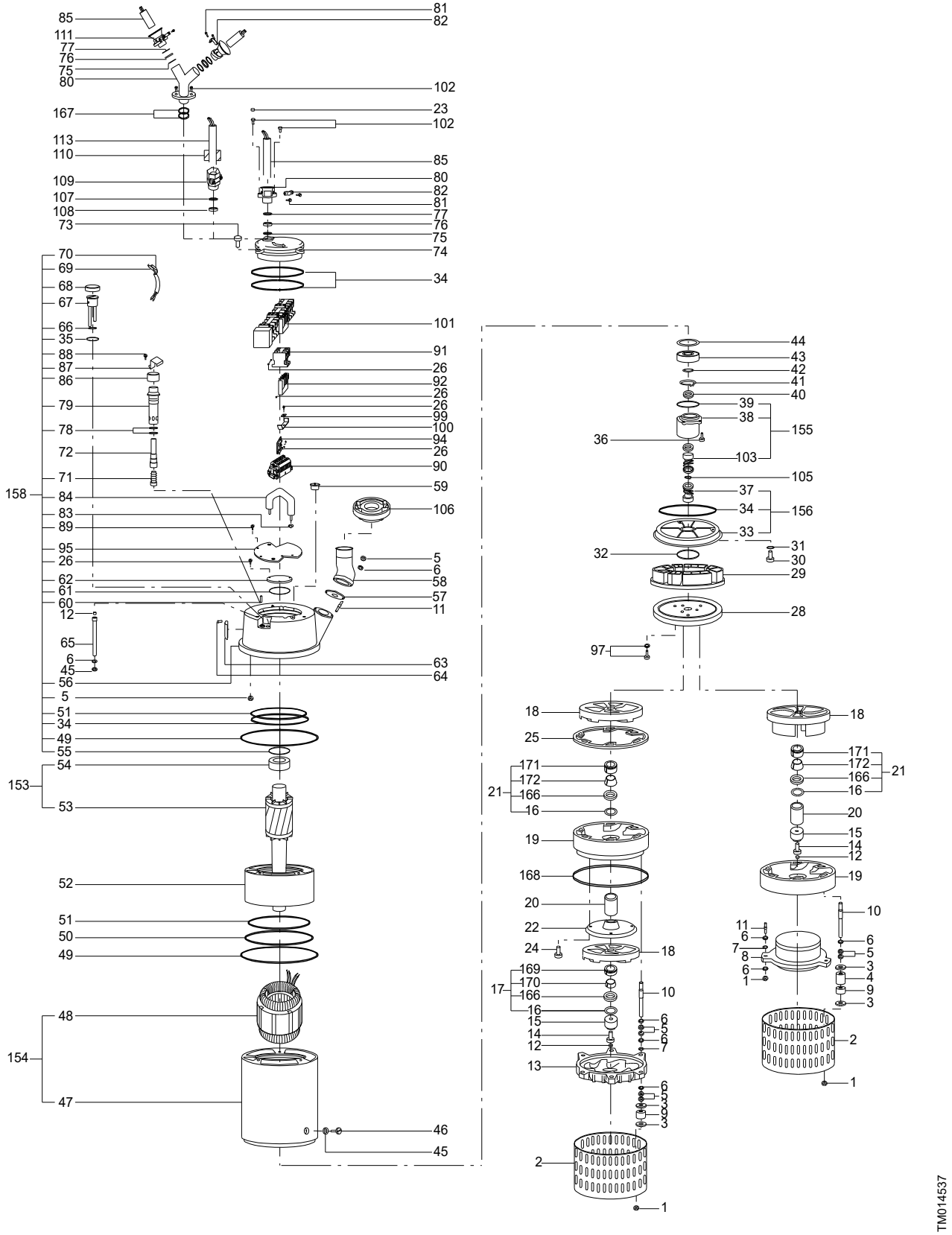

27. DWK

DWK.O

50/60 Hz

Bearing

Pos.	Pump type [kW]	0.75-2.2	3.7	5.5-7.5	11-15
	Description/Kit No	*96884154*	*96884155*	*96884156*	*96884157*
102	Stop ring	1	1	1	1
153	Lower bearing	1	1	1	1
153a	Lower bearing	-	-	1	1
154	Upper bearing	1	1	1	1

Cable entry

	Voltage [V]	220-240							
	Pump type [kW]	0.75		3.7	5.5	5.5	7.5	11	11
		2.2				7.5		15	15
Pos.	Version	Standard R 60 Hz	R 50 Hz	All	All	All	All	All	All
	Connection	DOL	DOL	DOL	DOL	Y-D	DOL	DOL	Y-D
	Description/Kit No	*96884246*	*96884387*	*96884226*	*96884227*	*96936873*	*96884228*	*96884229*	*96936874*
181a	Hex. bolt	3	3	2	2	2	2	2	2
181b	Washer	3	3	2	2	2	2	2	2
198b	Cable bush	-	-	2	2	2	2	2	2
198a	Ring	-	-	2	2	2	2	2	2
168	Cable gland	-	-	1	1	1	1	1	1
168b	Stuffing box	1	1	-	-	-	-	-	-
168a	Rubber moulding	1	1	-	-	-	-	-	-
524	Cable sleeve s	14	10	8	8	11	8	10	13
525	Shrinkable sleeve s	14	10	8	8	11	8	10	13
526	Electric tape	1	1	1	1	1	1	1	1

	Voltage [V]	380-415								
	[kW]	0.75		3.7		5.5	5.5	7.5	11	11
	Pump type	2.2					7.5		15	15
Pos.	Version	Standard R 60 Hz	R 50 Hz	Standard R 60 Hz	R 50 Hz	All	All	All	All	All
	Connection	DOL	DOL	DOL	DOL	DOL	Y-D	DOL	Y-D	DOL
	Description/Kit No	*96884246*	*96884387*	*96883702*	*96884230*	*96884231*	*96936873*	*96884227*	*96936873*	*96884228*
168	Cable gland	1	1	1	1	1	1	1	1	1
168b	Stuffing box	1	1	-	-	-	-	-	-	-
181	Power cable [m]	10	10	10	10	10	10	10	10	10
181a	Screw	3	3	2	2	2	2	2	2	2
181b	Washer	3	3	2	2	2	2	2	2	2
190a	Rubber moulding	1	1	-	-	-	-	-	-	-
198	Cable bush	-	-	2	2	2	2	2	2	2
198a	Backup ring	-	-	2	2	2	2	2	2	2
524	Cable sleeve	8	4	8	4	8	11	8	11	8
525	Shrinkable sleeve	8	4	8	4	8	11	8	11	8
526	Electric tape	1	1	1	1	1	1	1	1	1

Repair

Pos.	Pump type [kW]	0.75-2.2	3.7	5.5-7.5	11-15
	Rubber type	**NBR**	**NBR**	**NBR**	**NBR**
	Description/Kit No	***96884263***	***96884264***	***96884265***	***96884266***
39	O-ring	1	1	1	1
35a	O-ring	1	1	1	1
37b	O-ring	1	1	1	1
37e	Upper packing	1	1	1	1
39e	Lower packing	1	1	1	1
194	O-ring	1	1	1	1
193	Plug	1	1	1	1

DWK.O.6.50.075, DWK.O.6.50.15, DWK.O.6.50.22

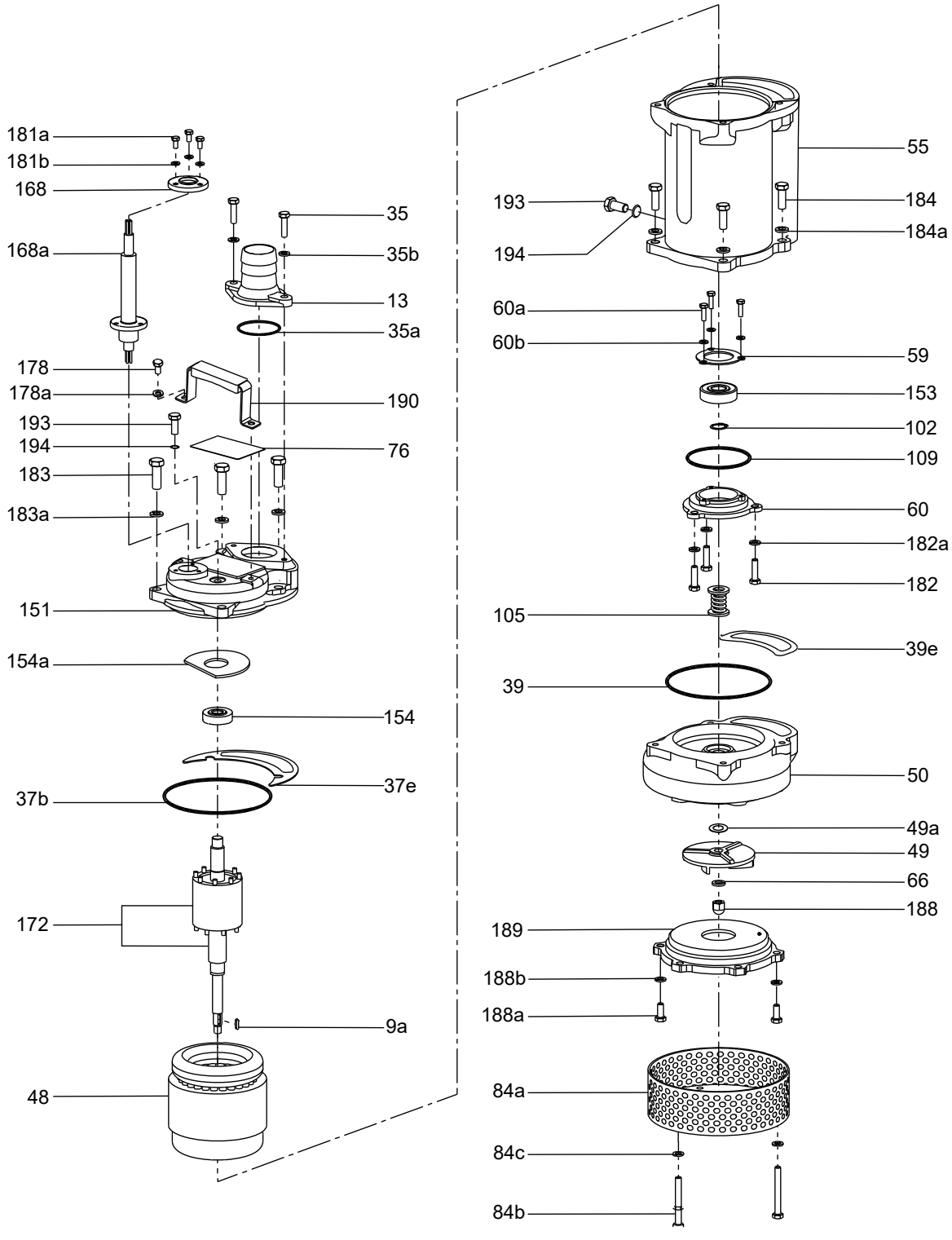

Cable

Pos.	Voltage [V]	220-240							
	Pump type [kW]	0.75		3.7	5.5	5.5	7.5	11	11
		2.2				7.5		15	15
	Version	Standard	R	All	All	All	All	All	All
	Connection	DOL	DOL	DOL	DOL	Y-D	DOL	DOL	Y-D
	Description/Kit No	*97792261*	*97793030*	*98668512*	*97793013*	*97793032*	*97793022*	*97793027*	*97793029*
188	Cable	10	10	10	10	10	10	10	10
168a	Cable entry	1	-	-	-	-	-	-	-
198	Cable bush	-	2	2	2	2	2	2	2

Pos.	Voltage [V]	380-415									
	Pump type [kW]	0.75		3.7			5.5	5.5	7.5	11	11
		2.2						7.5		15	15
	Version	Standard R 60 Hz	R 50 Hz	Standard	R 50 Hz	R 60 Hz	All	All	All	All	All
	Connection	DOL	DOL	DOL	DOL	DOL	DOL	Y-D	DOL	Y-D	DOL
	Description/Kit No	*97792261*	*97793030*	*98668376*	*98651221*	*97792261*	*97792987*	*97793032*	*97793013*	*97793032*	*97793022*
188	Cable	10	10	10	10	10	10	10	10	10	10
168a	Cable entry	1	-	-	-	-	-	-	-	-	-
198	Cable bush	-	2	2	2	2	2	2	2	2	2

Suction cover

Pos.		50 Hz					
	Pump type [kW]	0.75	50 / 1.5	80 / 1.5	80 / 3.7	100 / 3.7	80 / 5.5
			50 / 2.2				
			80 / 2.2				
	Description/Kit No	*96884243*	*96884244*	*96884245*	*96884165*	*96884247*	*96884248*
189	Suction cover	1	1	1	1	1	1
188a	Screw	3	3	3	3	3	3
188b	Washer	3	3	3	3	3	3

Pos.		50 Hz					
	Pump type [kW]	100 / 5.5	150 / 7.5	100 / 11	150 / 11	100 / 15	150 / 15
		100 / 7.5					
	Description/Kit No	*96884249*	*96884250*	*96926120*	*96884251*	*96884258*	*96884252*
189	Suction cover	1	1	1	1	1	1
188a	Screw	3	3	3	3	3	3
188b	Washer	3	3	3	3	3	3

Pos.		60 Hz					
	Pump type [kW]	0.75	80 / 1.5	80 / 2.2	80 / 3.7	100 / 3.7	80 / 5.5
		50 / 1.5					
		50 / 2.2					
	Description/Kit No	*96884253*	*96884254*	*96884255*	*96884256*	*96884257*	*96884248*
189	Suction cover	1	1	1	1	1	1
188a	Screw	3	3	3	3	3	3
188b	Washer	3	3	3	3	3	3

Pos.	Pump type [kW]	60 Hz					
		100 / 5.5	100 / 7.5	150 / 7.5	100 / 11	150 / 11 150 / 15	100 / 15
	Description/Kit No	***96884258***	***96884259***	***96884260***	***96884261***	***96884250***	***96884262***
189	Suction cover	1	1	1	1	1	1
188a	Screw	3	3	3	3	3	3
188b	Washer	3	3	3	3	3	3

Shaft seal

Pos.	Pump type [kW]	0.75-2.2	3.7	5.5-15
	Description/Kit No	***96884174***	***96884175***	***96884176***
105	Mechanical seal	1	1	1
105a	Seal stopper	-	1	1
105b	Screw	-	3	3

DWK.O.6.80.15, DWK.O.6.80.22, DWK.O.10.80.37, DWK.O.10.100.37

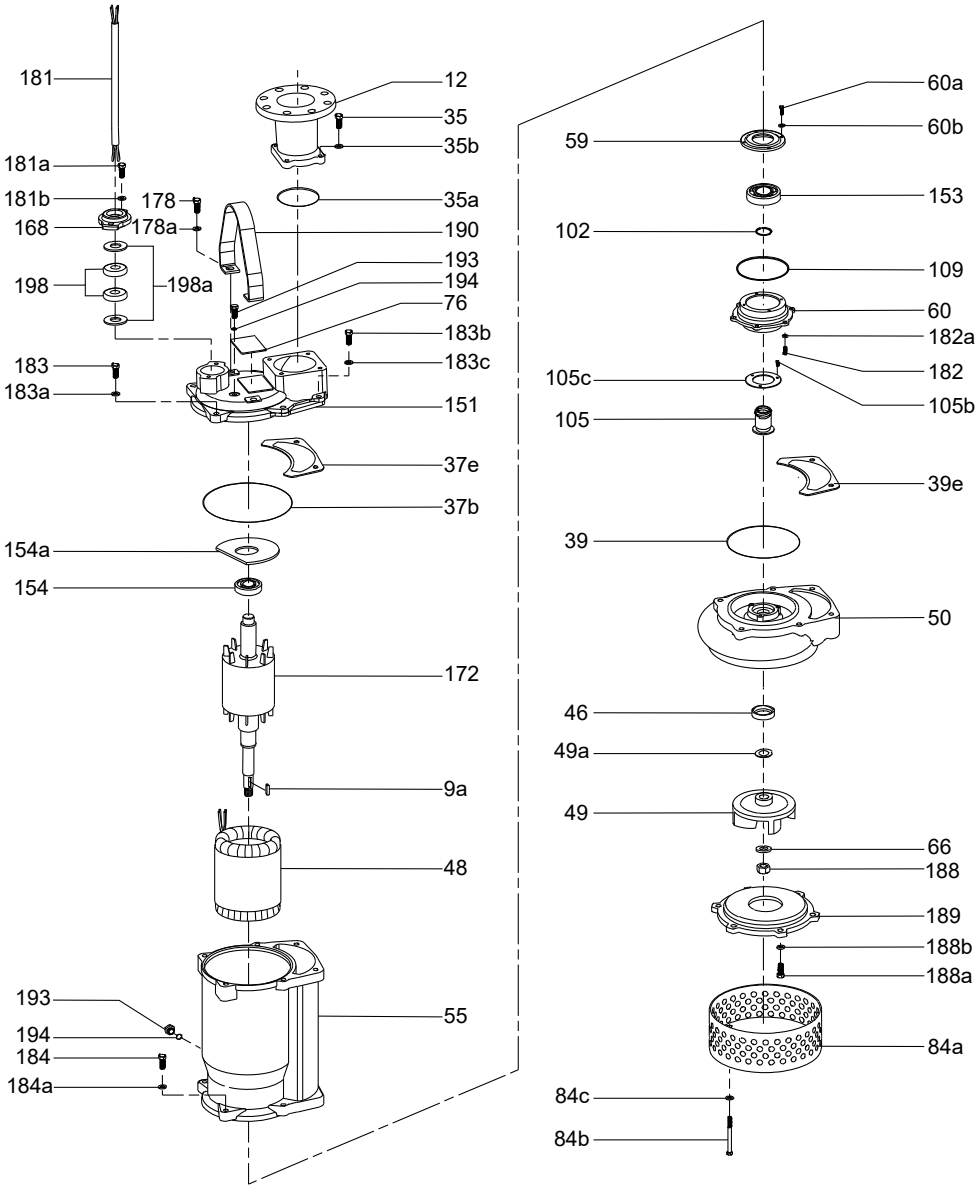

Impeller

Pos.	Pump type [kW]	50 Hz standard version							
		0.75	50 / 1.5	80 / 1.5	50 / 2.2	80 / 3.7	100 / 3.7	80 / 5.5	100 / 5.5
					80 / 2.2				
	Description/Kit No	*96884134*	*96884135*	*96884232*	*96884136*	*96884137*	*96884235*	*96884138*	*99045281*
9a	Sunk key	1	1	1	1	1	1	1	1
46	Oil seal	-	-	-	-	1	1	2	2
49	Impeller	1	1	1	1	1	1	1	1
49a	Gap washer	2	2	2	2	2	2	2	2
66	Washer	1	1	1	1	1	1	1	1
188	Cap nut	1	1	1	1	1	1	1	1

Pos.	Pump type [kW]	50 Hz standard version					
		100 / 7.5	150 / 7.5	100 / 11	150 / 11	100 / 15	150 / 15
	Description/Kit No	*99045280*	*96884236*	*96884140*	*96884237*	*96884141*	*96884238*
9a	Sunk key	1	1	1	1	1	1
46	Oil seal	2	2	2	2	2	2
49	Impeller	1	1	1	1	1	1
49a	Gap washer	2	2	2	2	2	2
66	Washer	1	1	1	1	1	1
188	Cap nut	1	1	1	1	1	1

Pos.	Pump type [kW]	50 Hz R version							
		0.75	50 / 1.5	80 / 1.5	50 / 2.2	80 / 3.7	100 / 3.7	80 / 5.5	100 / 5.5
					80 / 2.2				
	Description/Kit No	*96936846*	*96936847*	*96936848*	*96936849*	*96936850*	*96936851*	*96936852*	*99047368*
9a	Sunk key	1	1	1	1	1	1	1	1
46	Oil seal	-	-	-	-	1	1	2	2
49	Impeller	1	1	1	1	1	1	1	1
49a	Gap washer	2	2	2	2	2	2	2	2
66	Washer	1	1	1	1	1	1	1	1
188	Cap nut	1	1	1	1	1	1	1	1

Impeller

Pos.	Pump type [kW]	50 Hz R version					
		100 / 7.5	150 / 7.5	100 / 11	150 / 11	100 / 15	150 / 15
	Description/Kit No	*99045279*	*96936855*	*96936856*	*96936857*	*96936858*	*96936859*
9a	Sunk key	1	1	1	1	1	1
46	Oil seal	2	2	2	2	2	2
49	Impeller	1	1	1	1	1	1
49a	Gap washer	2	2	2	2	2	2
66	Washer	1	1	1	1	1	1
188	Cap nut	1	1	1	1	1	1

Pos.	Pump type [kW]	60 Hz standard version							
		0.75	50 / 1.5	80 / 1.5	50 / 2.2	80 / 2.2	80 / 3.7	100 / 3.7	80 / 5.5
	Description/Kit No	*96884144*	*96884145*	*96884234*	*96884146*	*96884202*	*96884147*	*96884239*	*96884148*
09a	Sunk key	1	1	1	1	1	1	1	1
46	Oil seal	-	-	-	-	-	1	1	2
49	Impeller	1	1	1	1	1	1	1	1
49a	Gap washer	2	2	2	2	2	2	2	2
66	Washer	1	1	1	1	1	1	1	1
188	Cap nut	1	1	1	1	1	1	1	1

60 Hz standard version								
Pos.	Pump type [kW]	100 / 5.5	100 / 7.5	150 / 7.5	100 / 11	150 / 11	100 / 15	150 / 15
	Description/Kit No	*96884240*	*96884149*	*96884241*	*96884150*	*96884242*	*96884139*	*96957540*
9a	Sunk key	1	1	1	1	1	1	1
46	Oil seal	2	2	2	2	2	2	2
49	Impeller	1	1	1	1	1	1	1
49a	Gap washer	2	2	2	2	2	2	2
66	Washer	1	1	1	1	1	1	1
188	Cap nut	1	1	1	1	1	1	1

60 Hz R version									
Pos.	Pump type [kW]	0.75	50 / 1.5	80 / 1.5	50 / 2.2	80 / 2.2	80 / 3.7	100 / 3.7	80 / 5.5
	Description/Kit No	*96936860*	*96936861*	*96936862*	*96936863*	*96936864*	*96936865*	*96936866*	*96936867*
9a	Sunk key	1	1	1	1	1	1	1	1
46	Oil seal	-	-	-	-	-	1	1	2
49	Impeller	1	1	1	1	1	1	1	1
49a	Gap washer	2	2	2	2	2	2	2	2
66	Washer	1	1	1	1	1	1	1	1
188	Cap nut	1	1	1	1	1	1	1	1

60 Hz R version								
Pos.	Pump type [kW]	100 / 5.5	100 / 7.5	150 / 7.5	100 / 11	150 / 11	100 / 15	150 / 15
	Description/Kit No	*96936868*	*96936869*	*96936870*	*96936853*	*96936871*	*96936854*	*96936872*
9a	Sunk key	1	1	1	1	1	1	1
46	Oil seal	2	2	2	2	2	2	2
49	Impeller	1	1	1	1	1	1	1
49a	Gap washer	2	2	2	2	2	2	2
66	Washer	1	1	1	1	1	1	1
188	Cap nut	1	1	1	1	1	1	1

DWK.O.13.80.55, DWK.O.13.100.55, DWK.O.13.100.75, DWK.O.13.100.110, DWK.O.13.100.150, DWK.O.13.150.150

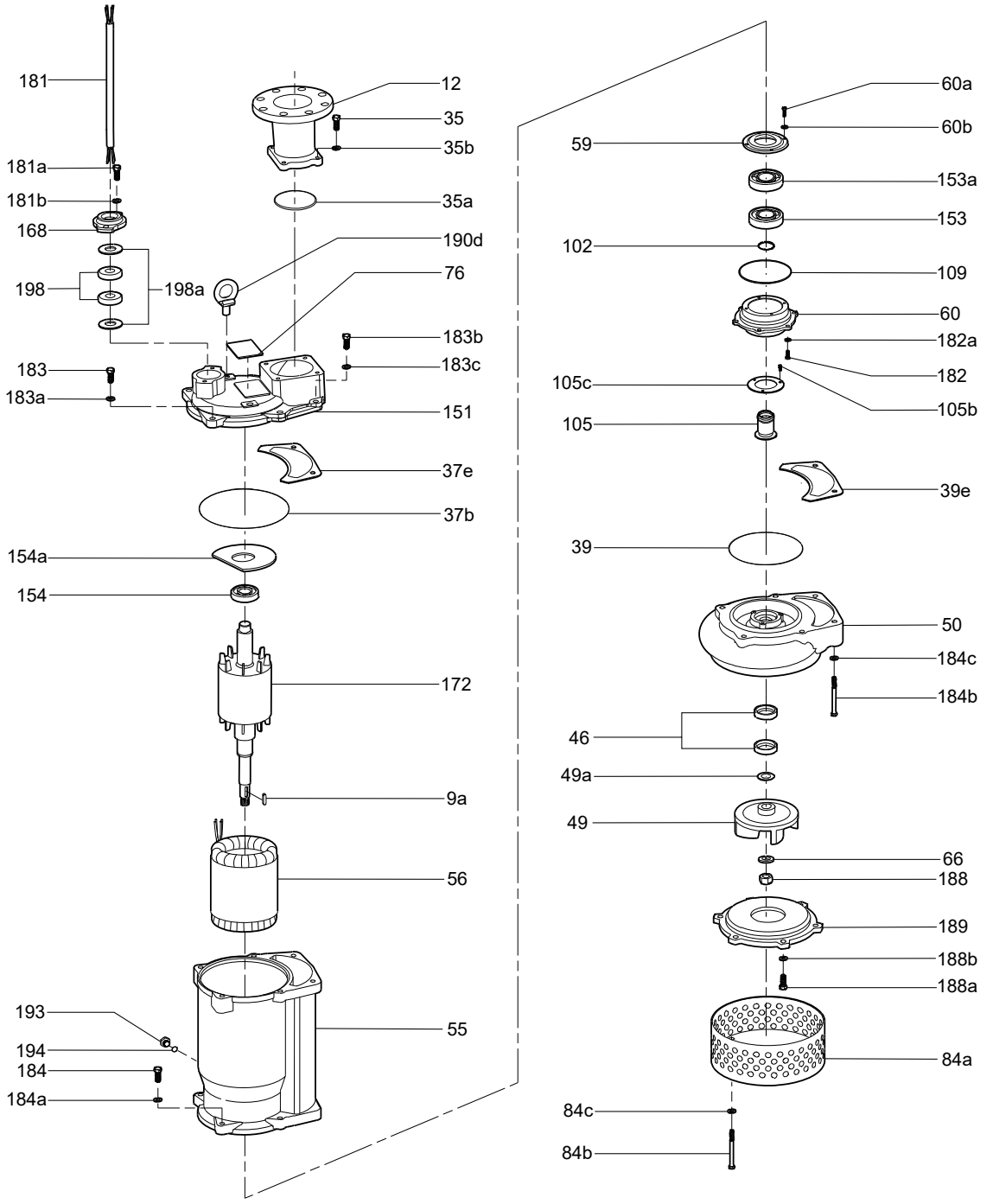

DWK.E

Bearing

Pos.	Pump type [kW]	100 / 22	150 / 37
		150 / 22	200 / 37
		150 / 30	150 / 45
		200 / 30	200 / 45
			150 / 55
			200 / 55
			200 / 75
			200 / 90
	Description/Kit No	*96884331*	*96884332*
102	Stop ring	1	1
153	Lower bearing	1	1
153a	Lower bearing	1	1
154	Upper bearing	1	1

Shaft seal

Pos.	Pump type [kW]	100 / 22	150 / 37
		150 / 22	200 / 37
		150 / 30	150 / 45
		200 / 30	200 / 45
			150 / 55
			200 / 55
			200 / 75
			200 / 90
	Description/Kit No	*96884177*	*96884333*
105	Mechanical seal	1	1
105a	Seal stopper	1	1
105b	Screw	3	3

Cable and cable entry

Pos.	Voltage [V]	220-240				380-415					
	Pump type [kW]	22	30	45	75	22	30	45	55	75	90
			37	55			37				
	Connection	Y-D	Y-D	Y-D	Y-D	Y-D	Y-D	Y-D	Y-D	Y-D	Y-D
	Kit No	*96884306*	*96884304*	*96884307*	*96884305*	*96884308*	*96884306*	*96884303*	*96884304*	*96884307*	*96884305*
	Description										
184f	O-ring	1	1	1	2	1	1	1	1	1	2
159	Cable rubber	1	1	1	2	1	1	1	1	1	2
159a	Stuffing box cover	1	1	1	2	1	1	1	1	1	2
168	Cable gland	1	1	1	2	1	1	1	1	1	2
168a	Stuffing box	1	1	1	2	1	1	1	1	1	2
181	Power cable [m]	10	10	10	10 x 2	10	10	10	10	10	10 x 2
181a	Screw	3	3	3	6	3	3	3	3	3	6
181b	Washer	3	3	3	6	3	3	3	3	3	6
183b	Screw	4	4	4	8	4	4	4	4	4	8
183c	Washer	4	4	4	8	4	4	4	4	4	8
184b	Screw	4	4	4	8	4	4	4	4	4	8
184c	Washer	4	4	4	8	4	4	4	4	4	8
198	Cable bush	1	1	1	2	1	1	1	1	1	2
524	Cable sleeve	13	13	13	16	13	13	13	13	13	16
525	Shrinkable sleeve	13	13	13	16	13	13	13	13	13	16
526	Electric tape, roll	1	1	1	1	1	1	1	1	1	1

Seal kit

Pos.	Pump type [kW]	Standard version			R version			
		100 / 22	150 / 37	200 / 90	100 / 22	150 / 22	150 / 37	200 / 90
		150 / 22	200 / 37			150 / 30	200 / 37	
		150 / 30	150 / 45			200 / 30	150 / 45	
		200 / 30	200 / 45				200 / 45	
			150 / 55				150 / 55	
			200 / 55				200 / 55	
			200 / 75				200 / 75	
	Rubber type	NBR	NBR	NBR	NBR	NBR	NBR	NBR
	Description/Kit No	*96884327*	*96884328*	*96884330*	*96884321*	*96884322*	*96884324*	*96884326*
35c	Gasket	1	-	-	1		-	-
37a	O-ring	1	1	1	1	1	1	1
37b	O-ring	1	1	1	1	1	1	1
37c	O-ring	1	1	1	1	1	1	1
39	O-ring	1	1	1	1	1	-	-
39a	O-ring	1	1	1	1	1	1	1
39b	O-ring	1	1	1	1	1	1	1
39c	O-ring	1	1	2	1	1	1	2
107	O-ring	1	1	1	1	1	1	1
109	O-ring	1	1	1	1	1	1	1
109a	O-ring	1	1	1	1	1	1	1
185	O-ring	-	1	-	-	-	1	-

DWK.E.10.100.220, DWK.E.10.150.220

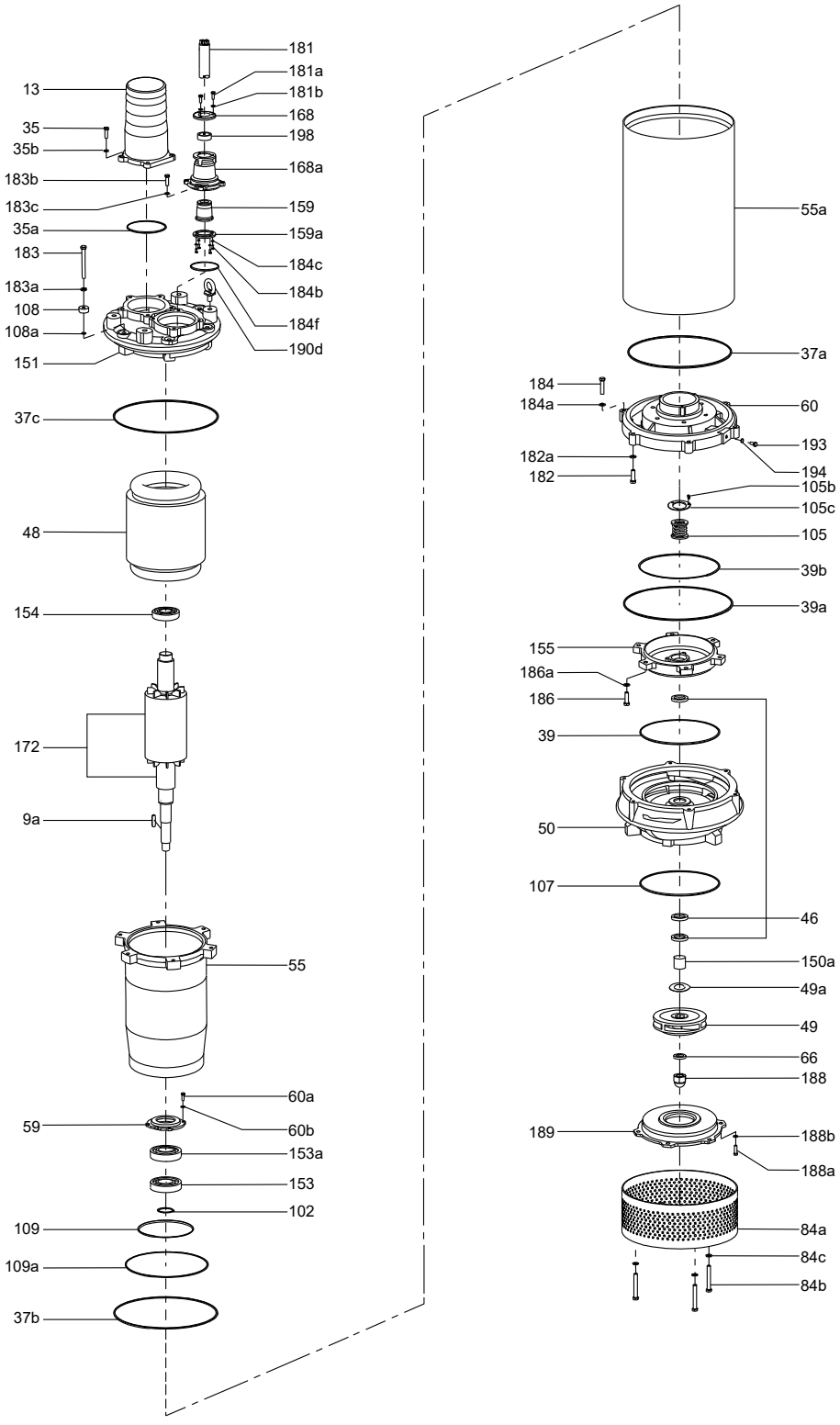

TM044576

Impeller

50 Hz standard version

Pos.	Pump type [kW]	100 / 22	150 / 30	200 / 30	150 / 37	200 / 37	150 / 45	200 / 45	150 / 55	200 / 55	200 / 75	200 / 90
		150 / 22										
	Kit No	*96884323*	*96926015*	*97533111*	*96926017*	*96926018*	*96926019*	*96926020*	*97533113*	*96884319*	*96926021*	*96926022*
	Description											
9a	Sunk key	1	1	1	1	1	1	1	1	1	1	1
46	Oil seal	3	3	3	3	3	3	3	3	3	3	3
49	Impeller	1	1	1	1	1	1	1	1	1	1	1
49a	Gap washer	2	2	2	2	2	2	2	2	2	2	2
66	Washer	1	1	1	1	1	1	1	1	1	1	1
188	Cap nut	1	1	1	1	1	1	1	1	1	1	1

50 Hz R version

Pos.	Pump type [kW]	100 / 22	150 / 30	200 / 30	150 / 37	200 / 37	150 / 45	200 / 45	150 / 55	200 / 55	200 / 75	200 / 90
		150 / 22										
	Kit No	*96936875*	*96936876*	*97533115*	*96936877*	*96936878*	*96936879*	*96936880*	*97533116*	*96936881*	*96936882*	*96936883*
	Description											
9a	Sunk key	1	1	1	1	1	1	1	1	1	1	1
46	Oil seal	3	3	3	3	3	3	3	3	3	3	3
49	Impeller	1	1	1	1	1	1	1	1	1	1	1
49a	Gap washer	2	2	2	2	2	2	2	2	2	2	2
66	Washer	1	1	1	1	1	1	1	1	1	1	1
188	Cap nut	1	1	1	1	1	1	1	1	1	1	1

60 Hz standard version

Pos.	Pump type [kW]	100 / 22	150 / 30	200 / 30	150 / 37	200 / 37	150 / 45	200 / 45	150 / 55	200 / 55	200 / 75	200 / 90
		150 / 22										
	Kit No	*96884310*	*96884311*	*97533118*	*96884313*	*97533119*	*96884315*	*96884316*	*96884317*	*96884318*	*96884319*	*97533120*
	Description											
9a	Sunk key	1	1	1	1	1	1	1	1	1	1	1
46	Oil seal	3	3	3	3	3	3	3	3	3	3	3
49	Impeller	1	1	1	1	1	1	1	1	1	1	1
49a	Gap washer	2	2	2	2	2	2	2	2	2	2	2
66	Washer	1	1	1	1	1	1	1	1	1	1	1
188	Cap nut	1	1	1	1	1	1	1	1	1	1	1

60 Hz R version

Pos.	Pump type [kW]	100 / 22	150 / 30	200 / 30	150 / 37	200 / 37	150 / 45	200 / 45	150 / 55	200 / 55	200 / 75	200 / 90
		150 / 22										
	Kit No	*96936884*	*96936885*	*97533124*	*96936886*	*97533122*	*96936887*	*96936888*	*96936889*	*96936890*	*96936881*	*97533123*
	Description											
9a	Sunk key	1	1	1	1	1	1	1	1	1	1	1
46	Oil seal	3	3	3	3	3	3	3	3	3	3	3
49	Impeller	1	1	1	1	1	1	1	1	1	1	1
49a	Gap washer	2	2	2	2	2	2	2	2	2	2	2
66	Washer	1	1	1	1	1	1	1	1	1	1	1
188	Cap nut	1	1	1	1	1	1	1	1	1	1	1

Suction cover

Pos.	Pump type [kW]	50 Hz								
		100 / 22	150 / 30	200 / 30	150 / 37	200 / 37	150 / 45	200 / 45	150 / 55	200 / 55
		150 / 22								200 / 75
										200 / 90
	Description/Kit No	***96884329***	***96926016***	***97534325***	***96884337***	***96884342***	***96884337***	***96884342***	***97534328***	***96884342***
188a	Screw	6	6	6	6	6	6	6	6	6
188b	Washer	6	6	6	6	6	6	6	6	6
189	Suction cover	1	1	1	1	1	1	1	1	1

Pos.	Pump type [kW]	60 Hz								
		100 / 22	150 / 30	200 / 30	150 / 37	200 / 37	150 / 45	200 / 45	150 / 55	200 / 90
		150 / 22						200 / 55		
								200 / 75		
	Description/Kit No	***96884334***	***96884335***	***97534353***	***96884337***	***97534355***	***96884339***	***96884342***	***96884340***	***97534356***
188a	Screw	6	6	6	6	6	6	6	6	6
188b	Washer	6	6	6	6	6	6	6	6	6
189	Suction cover	1	1	1	1	1	1	1	1	1

DWK.E.10.150.300, DWK.E.10.200.300, DWK.E.10.150.370, DWK.E.10.150.450, DWK.E.10.200.370, DWK.E.10.200.450

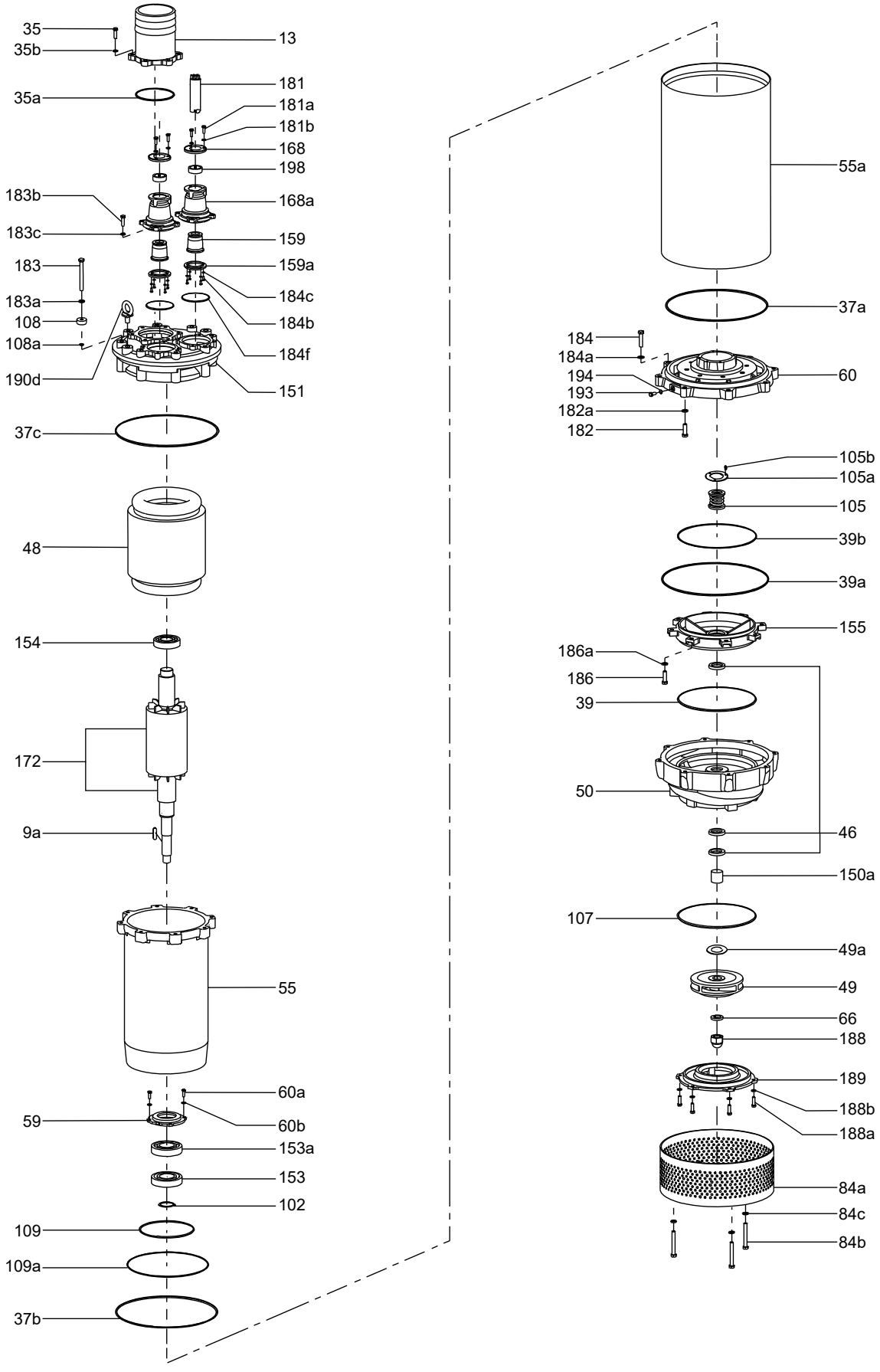

DWK.H

Bearing

Pos.	Pump type [kW]	100 / 22	150 / 45	150 / 75
		200 / 30	150 / 55	150 / 90
	Description/Kit No	*96884331*	*96884332*	99447253
102	Stop ring	1	1	1
153	Lower bearing	1	1	2
153a	Lower bearing	1	1	1
154	Upper bearing	1	1	1

Shaft seal

Pos.	Pump type [kW]	100 / 22	100 / 37
		200 / 30	150 / 45
			150 / 55
			150 / 75
			150 / 90
	Description/Kit No	*96884177*	*96884333*
105	Mechanical seal	1	1
105a	Seal stopper	1	1
105b	Screw	3	3

Cable and cable entry

Pos.	Voltage [V]	220-240				380-415					
	Pump type [kW]	22	30	45	75	22	30	45	55	75	90
			37	55			37				
	Connection	Y-D	Y-D	Y-D	Y-D	Y-D	Y-D	Y-D	Y-D	Y-D	Y-D
	Description/Kit No	*96884306*	*96884304*	*96884307*	*96884305*	*99884308*	*99215617*	*99215617*	*99215623*	*96884307*	*96884305*
39c	O-ring	1	1	1	2	1	1	1	1	1	2
159	Moulding Tube	1	1	1	2	1	1	1	1	1	2
159a	Stuffing box cover	1	1	1	2	1	1	1	1	1	2
168	Cable gland	1	1	1	2	1	1	1	1	1	2
168a	Stuffing box	1	1	1	2	1	1	1	1	1	2
181	Power cable	10 m	10 m	10 m	10 m	10 m	10 m	10 m	10 m	10 m	10 m
181a	Screw	3	3	3	6	3	3	3	3	3	6
181b	Washer	3	3	3	6	3	3	3	3	3	6
183b	Screw	4	4	4	8	4	4	4	4	4	8
183c	Washer	4	4	4	8	4	4	4	4	4	8
184b	Screw	4	4	4	8	4	4	4	4	4	8
184c	Washer	4	4	4	8	4	4	4	4	4	8
198	Cable bush	1	1	1	2	1	1	1	1	1	2

Seal kit

Pos.	Pump type [kW]		100 / 22 100 / 30	100 / 37 150 / 45 150 / 55 150 / 75 150 / 90
	Rubber type		**NBR**	**NBR**
	Description/Kit No		***99031211***	***96884328***
35c	Gasket		1	1
	O-ring	3.5 x 140	1	2
	O-ring	3.5 x 12	6	-
	O-ring	3.5 x 16	-	8
	O-ring	5.7 x 276	1	-
	O-ring	5.7 x 485	-	2
	O-ring	5.7 x 170	1	-
	O-ring	5.7 x 382	-	1
	O-ring	5.7 x 240	1	-
	O-ring	5.7 x 257	-	1
	O-ring	5.7 x 395	1	-
	O-ring	5.7 x 345	-	1
	O-ring	3.5 x 260	1	-
	O-ring	3.5 x 220	-	1
	O-ring	3.1 x 12	1	1
	O-ring	3.5 x 260	1	-
	O-ring	3.1 x 340		
	O-ring	3.1 x 395	-	2

DWK.H.7.100.220, DWK.H.7.100.300

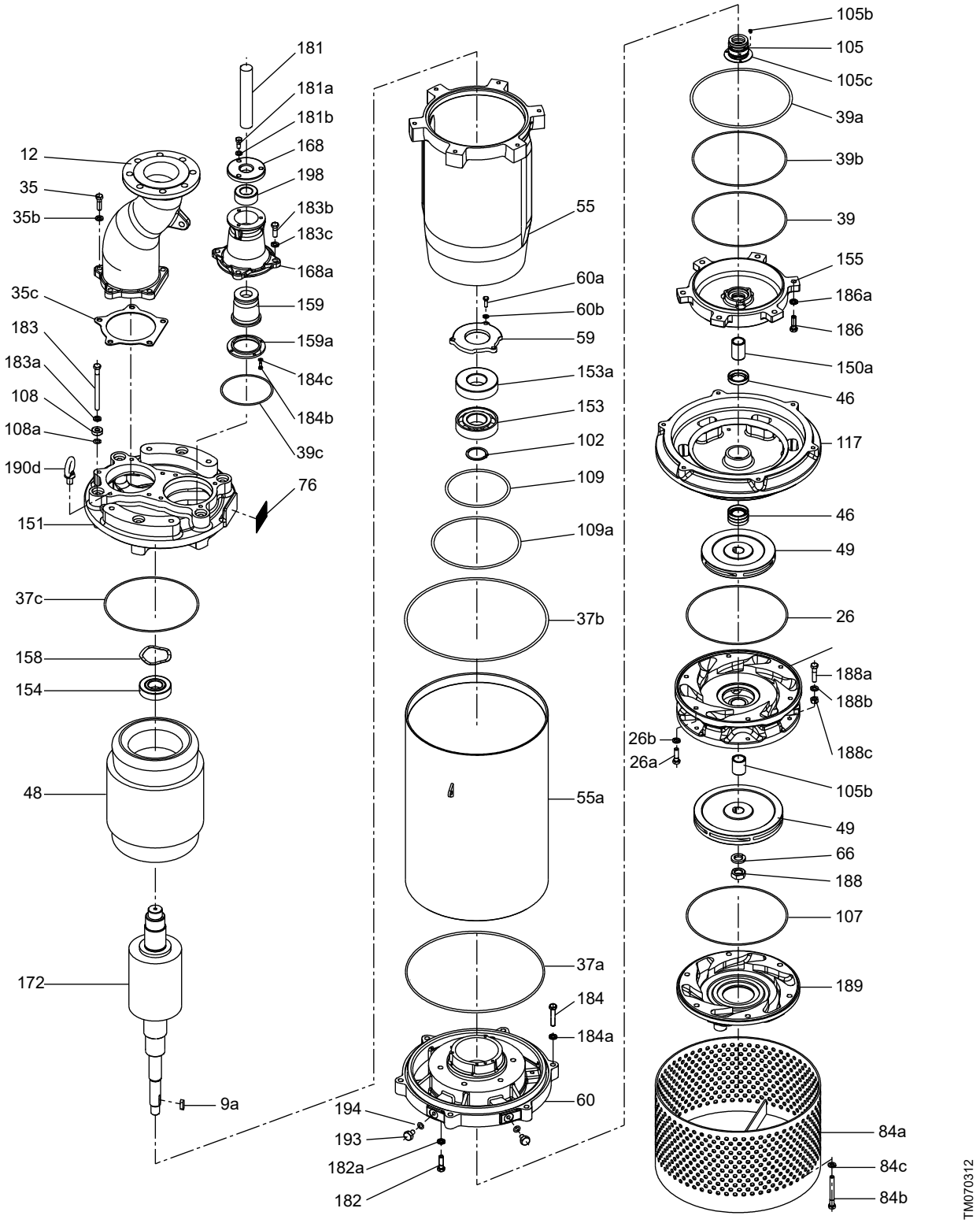

DWK.H.7.100.370, DWK.H.7.150.450, DWK.H.7.150.550

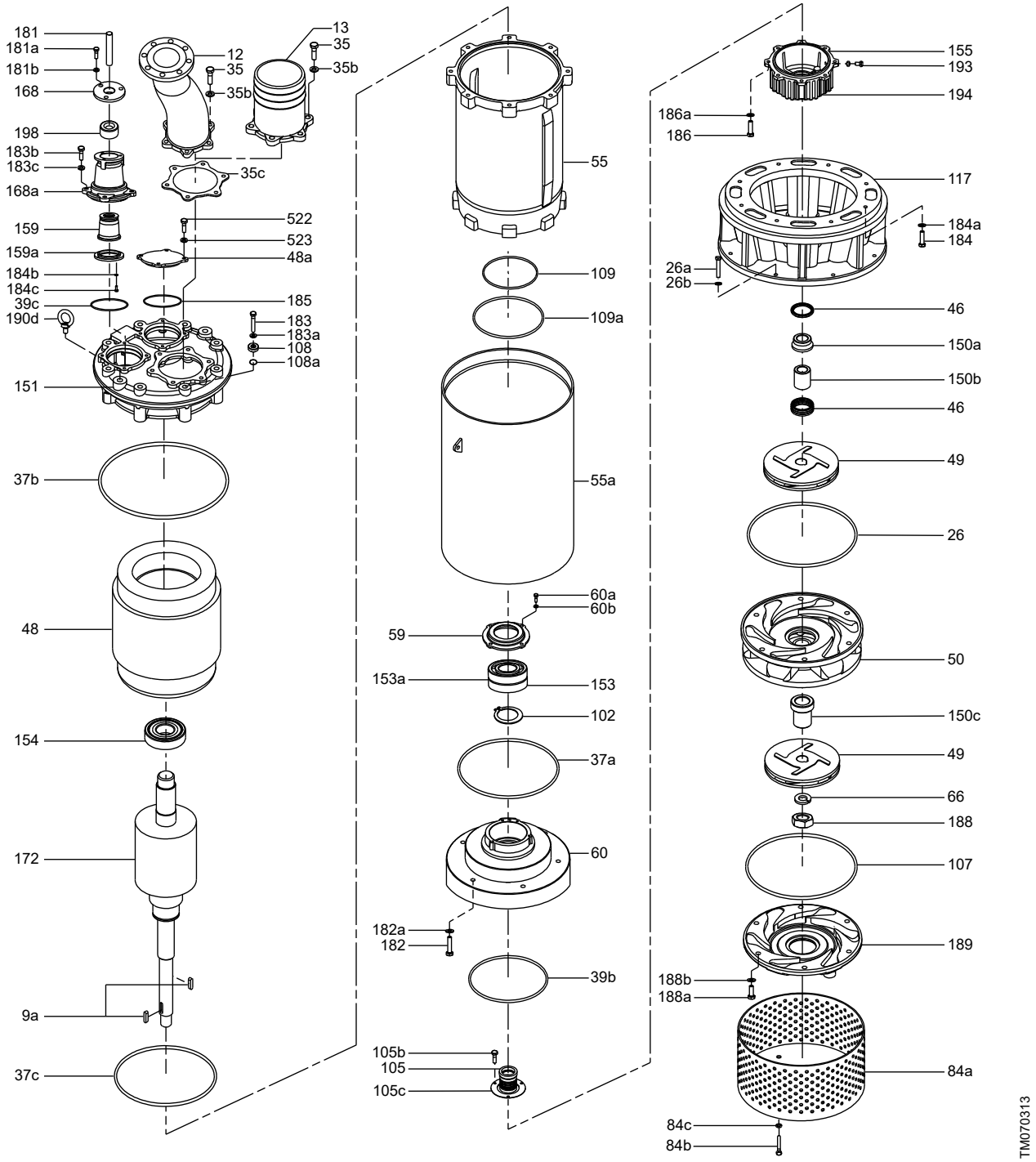

Impeller

		50 Hz						
Pos.	Pump type [kW]	100 / 22	100 / 30	100 / 37	100 / 45	150 / 55	150 / 75	150 / 90
	Description/Kit No	99446618	99446620	99446621	99446622	99446633	99446634	99446635
9a	Sunk key	2	2	2	2	2	2	2
46	Oil seal	3	3	3	3	3	3	3
49	Impeller	1	1	1	1	1	1	1
49a	Gap washer	2	2	2	2	2	2	2
66	Washer	1	1	1	1	1	1	1
188	Cap nut	1	1	1	1	1	1	1

		60 Hz						
Pos.	Pump type [kW]	100 / 22	150 / 30	200 / 30	150 / 37	200 / 37	150 / 45	200 / 45
	Description/Kit No	99446636	99446637	99446638	99446639	99446640	99446641	99446642
9a	Sunk key	2	2	2	2	2	2	2
46	Oil seal	3	3	3	3	3	3	3
49	Impeller	1	1	1	1	1	1	1
49a	Gap washer	2	2	2	2	2	2	2
66	Washer	1	1	1	1	1	1	1
188	Cap nut	1	1	1	1	1	1	1

Suction cover

		50 Hz	
Pos.	Pump type [kW]	100 / 22 100 / 30	100 / 37 150 / 45 150 / 55 150 / 75 150 / 90
	Description/Kit No	*96884329*	*96926016*
188a	Screw	6	6
188b	Washer	6	6
189	Suction cover	1	1
	Nut	6	-

		60 Hz		
Pos.	Pump type [kW]	100 / 22	100 / 30	100 / 37 150 / 45 150 / 55 150 / 75 150 / 90
	Description/Kit No	*994447250*	*99444117*	*99276728*
188a	Screw	6	6	6
188b	Washer	6	6	6
189	Suction cover	1	1	1
	Nut	6	6	-

DWK.H.7.150.750, DWK.H.7.150.900

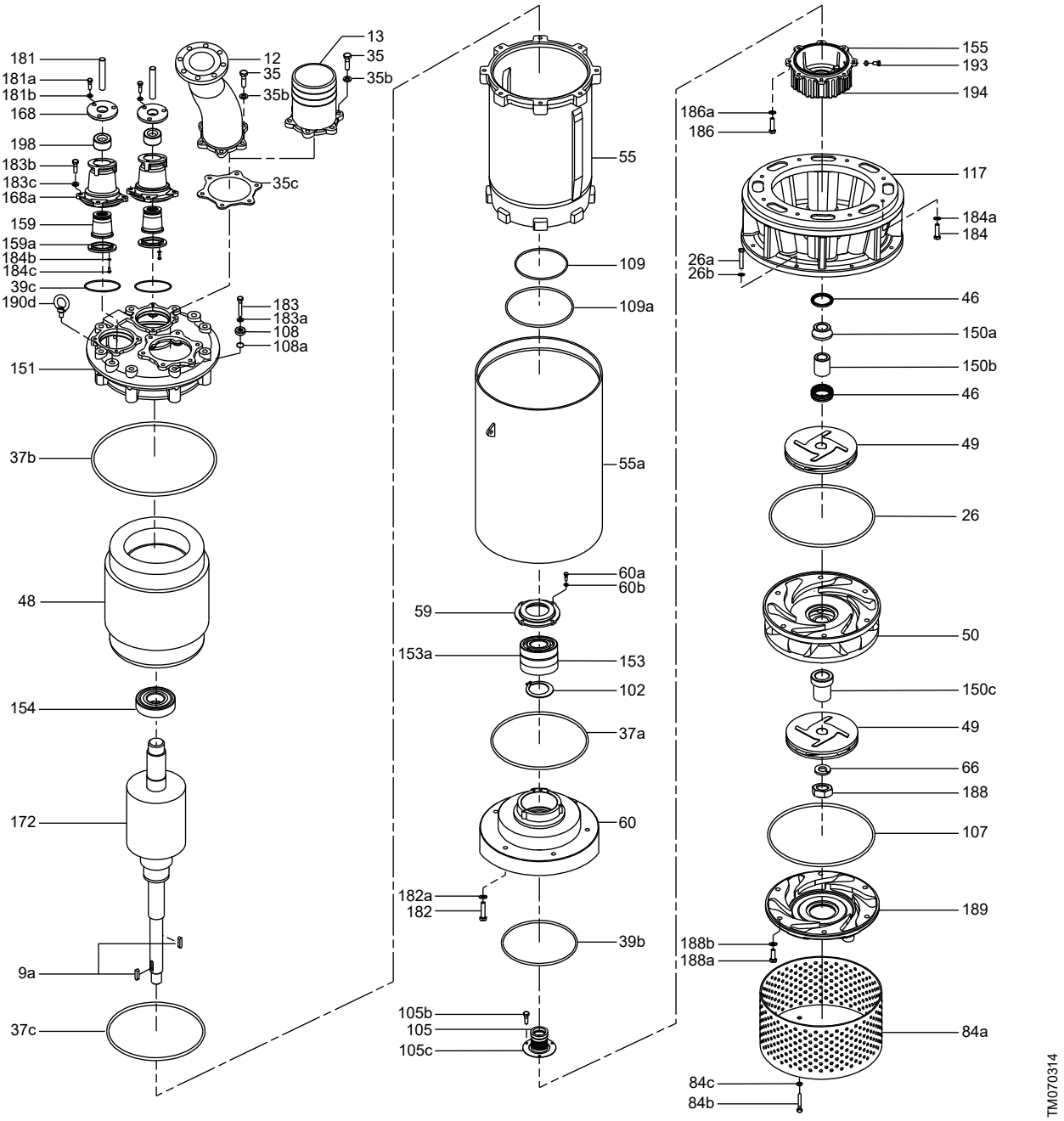

DPK

Cable

Pos.	Voltage [V]	220-240						
	Pump type [kW]	0.75-2.2	3.7	5.5	5.5	7.5	11	11
					7.5		15	15
	Connection	DOL	DOL	DOL	Y-D	DOL	DOL	S/D
	Description/Kit No	*97792261*	*98668512*	*97793013*	*97793032*	*97793022*	*97793027*	*97793029*
188	Cable	10	10	10	10	10	10	10
168a	Cable entry	1	-	-	-	-	-	-
198	Cable bush	-	2	2	2	2	2	2

Pos.	Voltage [V]	380-415							
	Pump type [kW]	0.75-2.2	3.7	5.5	7.5	5.5	11	11	19
						7.5	15	15	
	Connection	DOL	DOL	DOL	DOL	Y-D	Y/D	DOL	Y/D
	Description/Kit No	*97792261*	*98668376*	*97792987*	*97793013*	*97793032*	*97793032*	*97793022*	*97793029*
188	Cable	10	10	10	10	10	10	10	10
168a	Cable entry	1	-	-	-	-	-	-	-
198	Cable bush	-	2	2	2	2	2	2	2
198b	Cable bush	-	-	-	-	-	-	-	1

Cable entry, cable

Pos.	Voltage [V]	220-240							
	Pump type [kW]	0.75-2.2	3.7	5.5	5.5	7.5	11	11	19
					7.5		15	15	22
	Connection	DOL	DOL	DOL	Y-D	DOL	DOL	Y-D	Y-D
	Description/Kit No	*96884246*	*96884125*	*96884127*	*96936830*	*96884129*	*96884130*	*96936831*	*96884133*
84b	Screw	-	-	-	-	-	-	-	6
84c	Washer	-	-	-	-	-	-	-	6
168	Cable gland	1	1	1	1	1	1	1	1
181a	Screw	3	2	2	2	2	2	2	3
181b	Washer	3	2	2	2	2	2	2	3
168a	Cable entry	1	-	-	-	-	-	-	1
181	Power Cable	-	-	-	-	-	-	-	1
159	Moulding tube	-	-	-	-	-	-	-	1
198	Cable bush	-	2	2	2	2	2	2	-
198a	Ring	-	2	2	2	2	2	2	-
198b	Cable bush	-	-	-	-	-	-	-	1
524	Cable sleeve	14	12	12	11	8	10	13	13
525	Shrinkable sleeve	14	12	12	11	8	10	13	13
526	Electric tape	1	1	1	1	1	1	1	1

Pos.	Voltage [V]	380-415						
	Pump type [kW]	0.75-2.2	3.7	5.5	5.5	7.5	11	19
					7.5		15	22
					11			
					15			
	Connection	DOL	DOL	DOL	Y-D	DOL	DOL	Y-D
	Description/Kit No	*96884246*	*96884126*	*96884128*	*96936830*	*96884127*	*96884129*	*96884131*
84b	Screw	-	-	-	-	-	-	6
84c	Washer	-	-	-	-	-	-	6
168	Cable gland	1	1	1	1	1	1	1
181a	Screw	3	2	2	2	2	2	3
181b	Washer	3	2	2	2	2	2	3
168a	Cable entry	1	-	-	-	-	-	1

Pos.	Voltage [V]	380-415						
	Pump type [kW]	0.75-2.2	3.7	5.5	5.5	7.5	11	19
					7.5		15	22
					11			
					15			
	Connection	DOL	DOL	DOL	Y-D	DOL	DOL	Y-D
	Description/Kit No	*96884246*	*96884126*	*96884128*	*96936830*	*96884127*	*96884129*	*96884131*
181	Power Cable	-	-	-	-	-	-	1
159	Moulding tube	-	-	-	-	-	-	1
198	Cable bush	-	2	2	2	2	2	-
198a	Ring	-	2	2	2	2	2	-
198b	Cable bush	-	-	-	-	-	-	1
524	Cable sleeve	14	14	12	11	12	8	13
525	Shrinkable sleeve	14	14	12	11	12	8	13
526	Electric tape	1	1	1	1	1	1	1

DPK.10.50.075, DPK.10.50.15, DPK.10.80.22

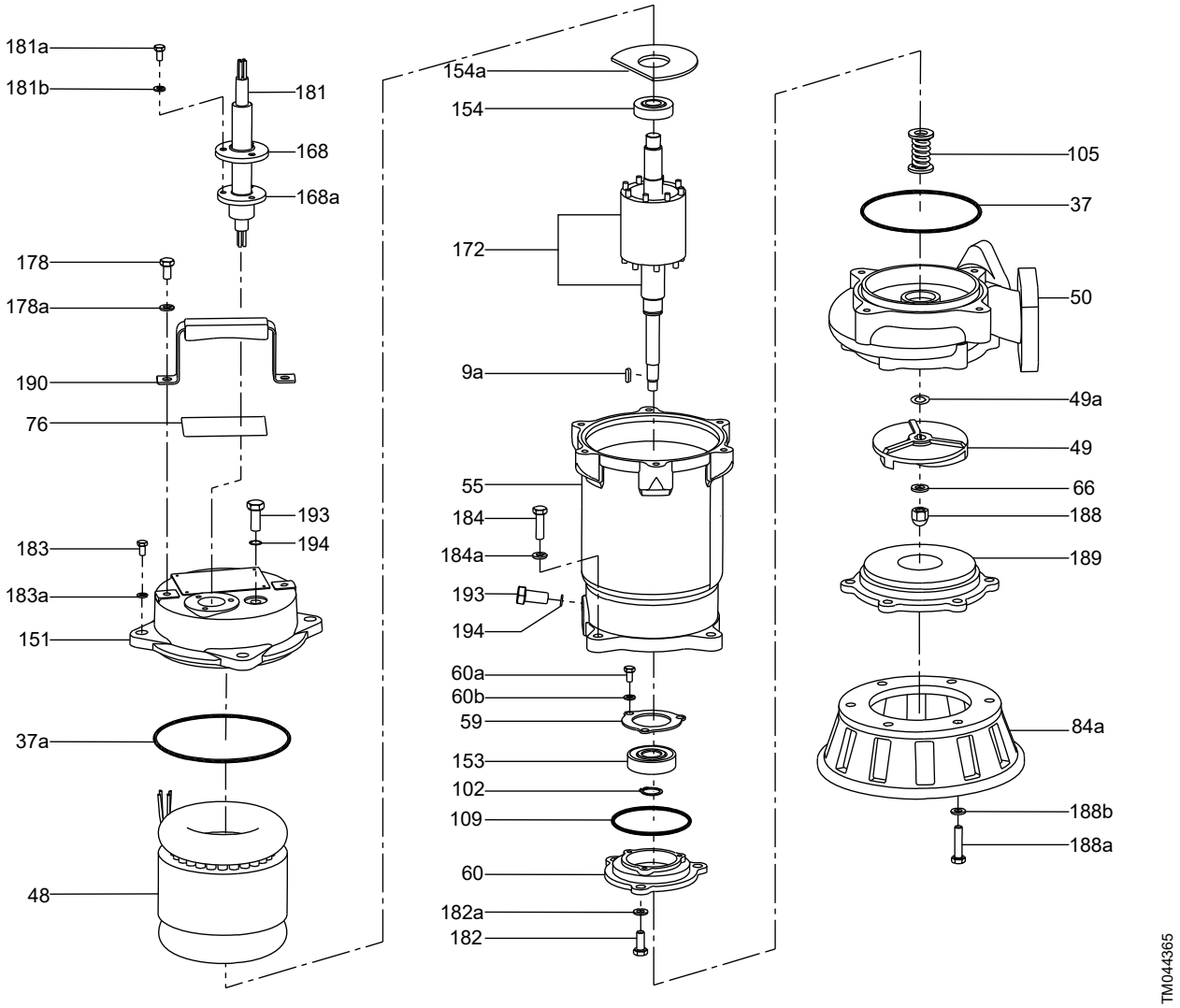

DPK.15.80.37, DPK.15.100.55, DPK.15.100.75, DPK.20.100.110, DPK.20.100.150

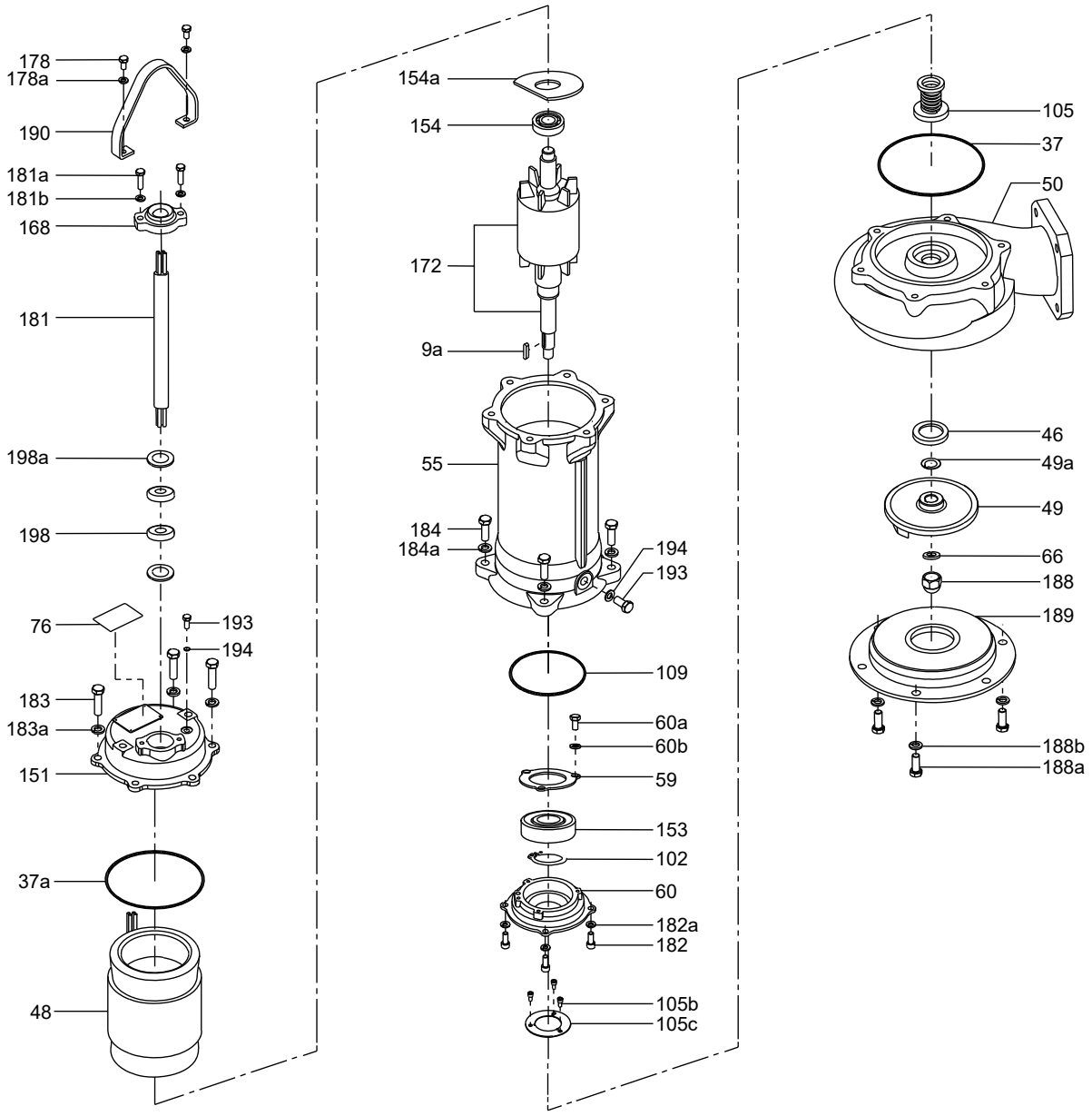

Bearing

	Pump type [kW]	0.75-2.2	3.7	5.5-7.5	11-15	19-22
Pos.	Description/Kit No	*96884154*	*96884155*	*96884156*	*96884157*	*96884158*
102	Stop ring	1	1	1	1	1
153	Lower bearing	1	1	1	1	1
153a	Lower bearing	-	-	1	1	1
154	Upper bearing	1	1	1	1	1

Impeller

		50 Hz									
Pos.	Pump type [kW]	0.75	1.5	2.2	3.7	5.5	7.5	11	15	19	22
	Description/ Kit No	*96884134*	*96884135*	*96884136*	*96884137*	*96884138*	*99045280*	*96884140*	*96884141*	*96884142*	*96884143*
9a	Sunk key	1	1	1	1	1	1	1	1	1	1
46	Oil seal	-	-	-	1	1	1	1	1	1	1
46a	Oil seal	-	-	-	-	-	-	-	-	1	1
49	Impeller	1	1	1	1	1	1	1	1	1	1
49a	Gap washer	2	2	2	2	2	2	2	2	2	2
66	Washer	1	1	1	1	1	1	1	1	1	1
188	Cap nut	1	1	1	1	1	1	1	1	1	1

		60 Hz									
Pos.	Pump type [kW]	0.75	1.5	2.2	3.7	5.5	7.5	11	15	19	22
	Description/ Kit No	*96884144*	*96884145*	*96884146*	*96884147*	*96884148*	*96884149*	*96884150*	*96884151*	*96884152*	*96884153*
9a	Sunk key	1	1	1	1	1	1	1	1	1	1
46	Oil seal	-	-	-	1	1	1	1	1	1	1
46a	Oil seal	-	-	-	-	-	-	-	-	1	1
49	Impeller	1	1	1	1	1	1	1	1	1	1
49a	Gap washer	2	2	2	2	2	2	2	2	2	2
66	Washer	1	1	1	1	1	1	1	1	1	1
188	Cap nut	1	1	1	1	1	1	1	1	1	1

O-ring

	Pump type [kW]	0.75-2.2	3.7	5.5-7.5	11-15	19-22
Pos.	Rubber type	NBR	NBR	NBR	NBR	NBR
	Description/Kit No	*96884169*	*96884170*	*96884171*	*96884172*	*96884173*
37	O-ring	1	1	1	1	1
37a	O-ring	1	1	1	1	1
37b	O-ring	1	1	1	1	1
109	O-ring	1	1	1	1	1
194	O-ring	1	1	1	1	1

Shaft seal

Pos.	Pump type [kW]	0.75-2.2	3.7	5.5-15	19-22
	Description/Kit No	*96884174*	*96884175*	*96884176*	*96884177*
105	Mechanical seal	1	1	1	1
105a	Seal stopper	-	1	1	1
105b	Screw	-	3	3	3

Suction cover

Pos.		50 Hz						
	Pump type [kW]	**0.75-1.5**	**2.2**	**3.7**	**5.5**	**7.5**	**11-15**	**19-22**
	Description/Kit No	***96884159***	***96884160***	***96884165***	***96884161***	***96884162***	***96884163***	***96884167***
188a	Screw	3	3	6	6	6	6	6
188b	Washer	3	3	6	6	6	6	6
189	Suction cover	1	1	1	1	1	1	1

Pos.		60 Hz				
	Pump type [kW]	**0.75-2.2**	**3.7**	**5.5**	**11-15**	**19-22**
				7.5		
	Description/Kit No	***96884159***	***96884164***	***96884161***	***96884162***	***96884166***
188a	Screw	3	6	6	6	6
188b	Washer	3	6	6	6	6
189	Suction cover	1	1	1	1	1

DPK.20.150.190, DPK.20.150.220

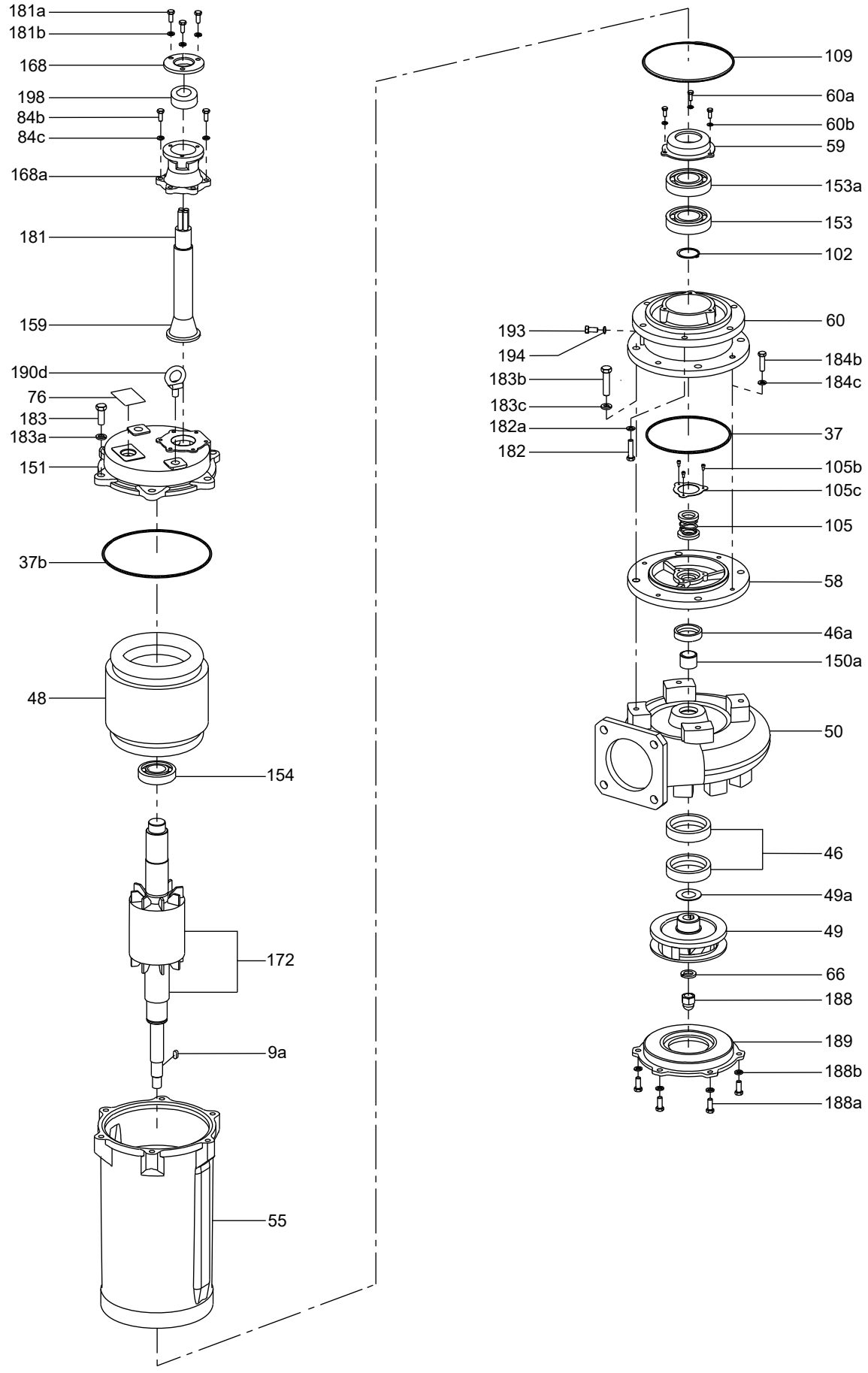

DPK.V

Bearing

Pos.		2 pole			4 pole	
	Pump type [kW]	**1.5-2.2**	**3.7**	**5.5-7.5**	**1.5-2.2**	**3.7-7.5**
	Description/Kit No	***96884154***	***96884155***	***96884156***	***96884155***	***96884156***
102	Stop ring	1	1	1	1	1
153	Lower bearing	1	1	1	1	1
153a	Lower bearing	-	-	1	-	1
154	Upper bearing	1	1	1	1	1

Cable

Pos.		2 pole					4 pole				
	Voltage [V]	**220-240**					**220-240**				
	Pump type [kW]	**1.5-2.2**	**3.7**	**5.5**	**5.5**	**7.5**	**1.5-2.2**	**3.7**	**5.5**	**5.5**	**7.5**
					7.5					**7.5**	
	Connection	**DOL**	**DOL**	**DOL**	**Y-D**	**DOL**	**DOL**	**DOL**	**DOL**	**Y-D**	**DOL**
	Description/Kit No	***97792261***	***98668512***	***97793013***	***97793032***	***97793022***	***98668376***	***97792987***	***97793013***	***97793032***	***97793022***
188	Cable	10	10	10	10	10	10	10	10	10	10
168a	Cable entry	1	-	-	-	-	-	-	-	-	-
198	Cable bush	-	2	2	2	2	2	2	2	2	2

Pos.		2 pole					4 pole			
	Voltage [V]	**380-415**					**380-415**			
	Pump type [kW]	**1.5-2.2**	**3.7**	**5.5**	**7.5**	**5.5**	**1.5-2.2**	**3.7**	**5.5**	**5.5**
						7.5				**7.5**
	Connection	**DOL**	**DOL**	**DOL**	**DOL**	**Y-D**	**DOL**	**DOL**	**DOL**	**Y-D**
	Description/Kit No	***97792261***	***98668376***	***97792987***	***97793013***	***97793032***	***98668376***	***97792987***	***97793013***	***97793032***
188	Cable	10	10	10	10	10	10	10	10	10
168a	Cable entry	1	-	-	-	-	-	-	-	-
198	Cable bush	-	2	2	2	2	2	2	2	2

Cable entry

Pos.		2 pole					4 pole				
	Voltage [V]	**220-240**					**220-240**				
	Pump type [kW]	**1.5-2.2**	**3.7**	**5.5**	**5.5**	**7.5**	**1.5-2.2**	**3.7**	**5.5**	**5.5**	**7.5**
					7.5					**7.5**	
	Connection	**DOL**	**DOL**	**DOL**	**Y-D**	**DOL**	**DOL**	**DOL**	**DOL**	**Y-D**	**DOL**
	Description/Kit No	***96884246***	***96884125***	***96884127***	***96936830***	***96884129***	***96884126***	***96884128***	***96884127***	***96936830***	***96884129***
181a	Hex. bolt	3	2	2	2	2	2	2	2	2	2
181b	Washer	3	2	2	2	2	2	2	2	2	2
198	Cable bush	-	2	2	2	2	2	2	2	2	2
198a	Ring	-	2	2	2	2	2	2	2	2	2
168	Cable gland	1	1	1	1	1	1	1	1	1	1
168a	Cable entry	1	-	-	-	-	-	-	-	-	-
524	Cable sleeve s	14	12	12	11	8	14	12	12	11	8
525	Shrinkable sleeve s	14	12	12	11	8	14	12	12	11	8
526	Electric tape	1	1	1	1	1	1	1	1	1	1

Pos.		2 pole					4 pole			
	Voltage [V]	**380-415**					**380-415**			
	Pump type [kW]	**1.5-2.2**	**3.7**	**5.5**	**7.5**	**5.5**	**1.5-2.2**	**3.7**	**5.5**	**5.5**
						7.5				**7.5**
	Connection	**DOL**	**DOL**	**DOL**	**DOL**	**Y-D**	**DOL**	**DOL**	**DOL**	**Y-D**
	Description/Kit No	***96884246***	***96884126***	***96884128***	***96884127***	***96936830***	***96884126***	***96884128***	***96884127***	***96936830***
181a	Hex. bolt	3	2	2	2	2	2	2	2	2
181b	Washer	3	2	2	2	2	2	2	2	2
198	Cable bush	-	2	2	2	2	2	2	2	2
198a	Ring	-	2	2	2	2	2	2	2	2
168	Cable gland	1	1	1	1	1	1	1	1	1
168a	Cable entry	1	-	-	-	-	-	-	-	-
524	Cable sleeve s	14	14	12	12	11	14	12	12	11
525	Shrinkable sleeve s	14	14	12	12	11	14	12	12	11
526	Electric tape	1	1	1	1	1	1	1	1	1

DPK.V.65.80.15.2 - DPK.V.65.80.22.2

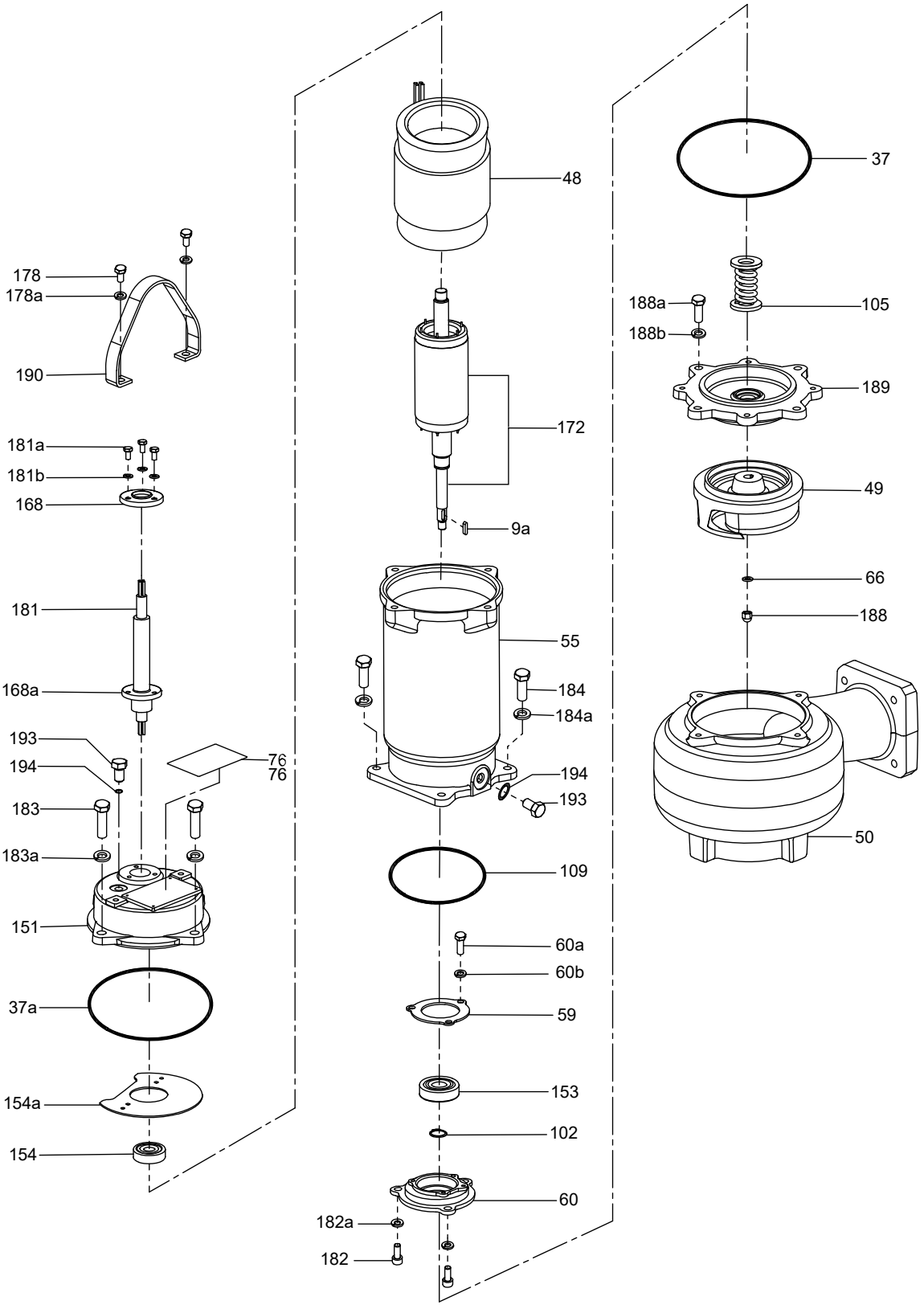

DPK.V.65.80.15.4 - DPK.V.65.80.15.4

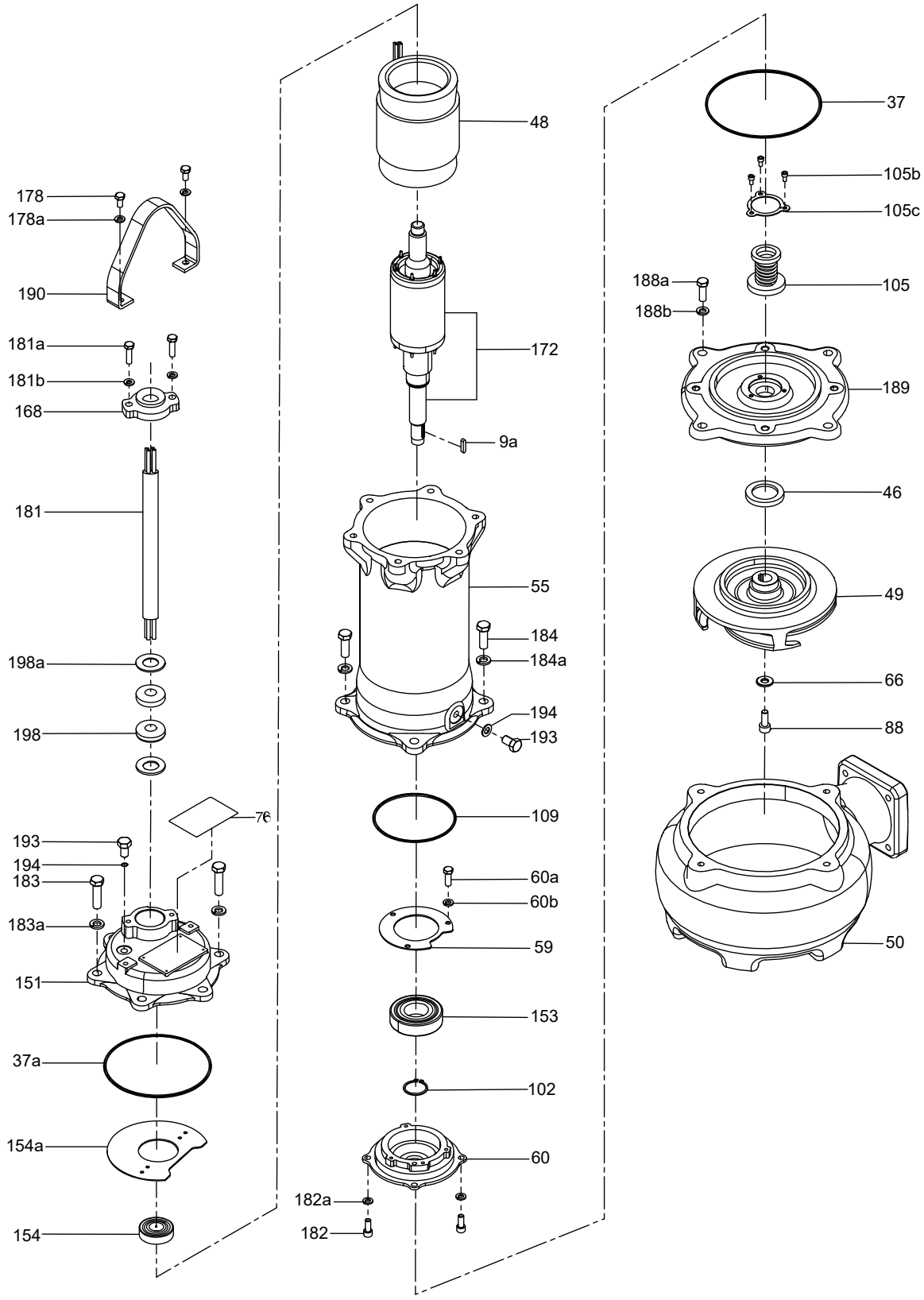

Cover

Pos.		2 pole			4 pole	
	Pump type [kW]	**1.5-2.2**	**3.7**	**5.5 - 7.5**	**1.5-2.2**	**3.7-7.5**
	Description/Kit No	***98978383***	***98978385***	***98808277***	***98978385***	***98978384***
188a	Screw	4	4	4	4	6
188b	Washer	4	4	4	4	6
189	Suction cover	1	1	1	1	1

Impeller

Pos.		2 Pole				
	Pump type [kW]	**1.5**	**2.2**	**3.7**	**5.5**	**7.5**
	DescriptionKit No	***98978386***	***98978387***	***98808278***	***98808279***	***98808280***
9a	Key	1	1	1	1	1
46	Oil seal	-	-	1	2	2
49	Impeller	1	1	1	1	1
66	Washer	1	1	1	1	1
88	Socket head cap screw	-	-	1	1	1
188	Cap nut	1	1	-	-	-

Pos.		4 pole				
	Pump type [kW]	**1.5**	**2.2**	**3.7**	**5.5**	**7.5**
	DescriptionKit No	***98978391***	***98978392***	***98978388***	***98978389***	***98978390***
9a	Key	1	1	1	1	1
46	Oil seal	1	1	2	2	2
49	Impeller	1	1	1	1	1
66	Washer	1	1	1	1	1
88	Socket head cap screw	1	1	1	1	1

O-ring

Pos.		2 pole			4 pole	
	Pump type [kW]	**1.5-2.2**	**3.7**	**5.5-7.5**	**1.5-2.2**	**3.7-7.5**
	Rubber type	**NBR**	**NBR**	**NBR**	**NBR**	**NBR**
	Description/Kit No	***96884169***	***96884170***	***96884171***	***96884170***	***96884171***
37	O-ring	1	1	1	1	1
37a	O-ring	1	1	1	1	1
109	O-ring	1	1	1	1	1
194	O-ring	1	1	1	1	1
193	Plug	1	1	1	1	1

Shaft seal

Pos.		2 pole			4 pole	
	Pump type [kW]	**1.5-2.2**	**3.7**	**5.5-7.5**	**1.5-2.2**	**3.7-7.5**
	Description/Kit No	***96884174***	***96884175***	***96884176***	***96884175***	***96884176***
105	Mechanical seal	1	1	1	1	1
105b	Screw	-	3	3	3	3

Stator & rotor w/shaft

Pos.		2 pole				
	Voltage	**380 Volt**				
	Pump type [kW]	**1.5**	**2.2**	**3.7**	**5.5**	**7.5**
	Description/kit No	***96961294***	***96961295***	***98808306***	***98808307***	***98808308***
48	Stator	1	1	1	1	1
172	Shaft w/rotor	1	1	1	1	1

Pos.		4 pole						
	Voltage	**380 Volt**					**660 Volt**	
	Pump type [kW]	**1.5**	**2.2**	**3.7**	**5.5**	**7.5**	**5.5**	**7.5**
	Description/kit No	***98978404***	***98978405***	***98978401***	***98978402***	***98978403***	***98978406***	***98978407***
48	Stator	1	1	1	1	1	1	1
172	Shaft w/rotor	1	1	1	1	1	1	1

DPK.V.80.80.37.2

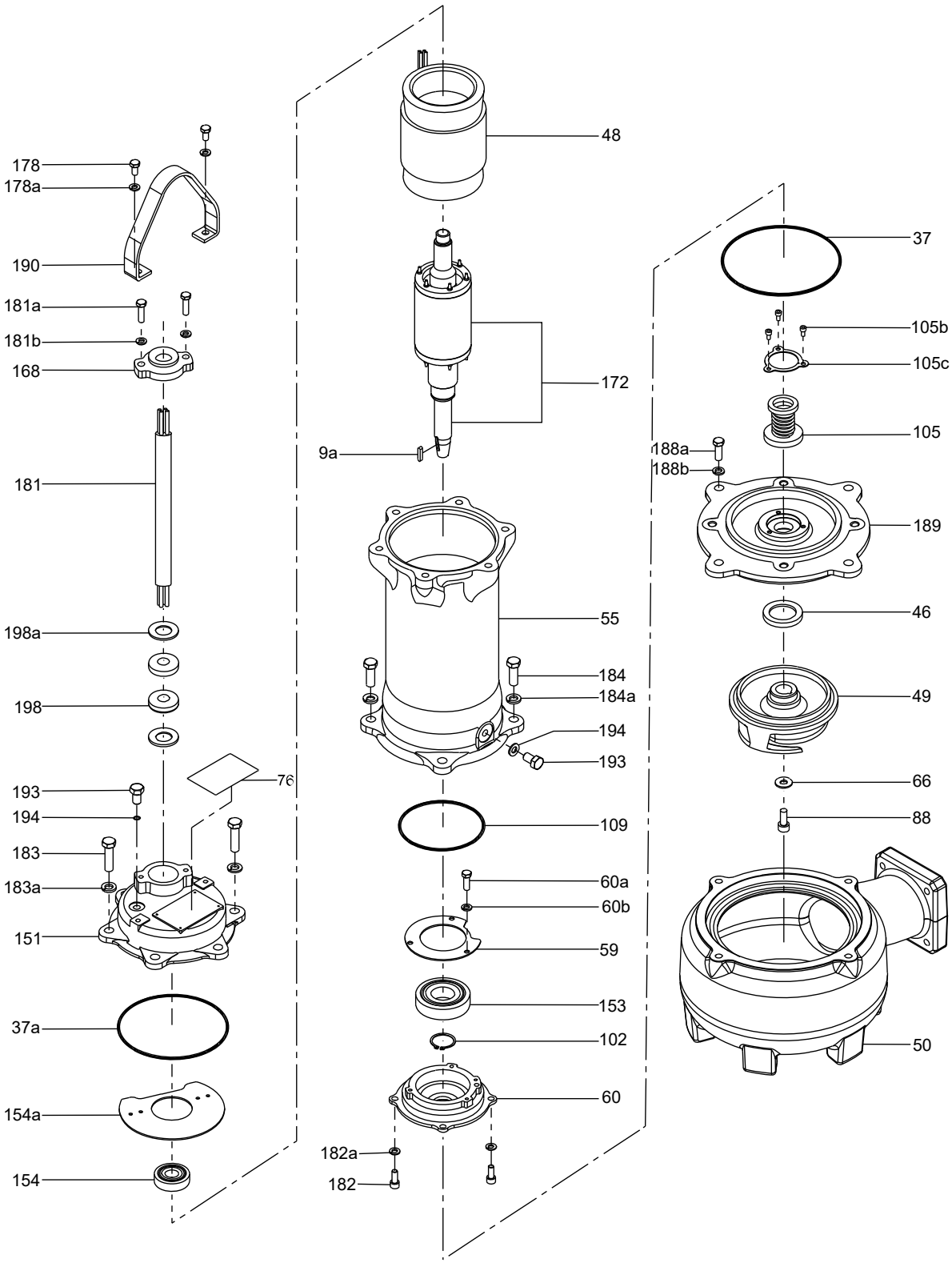

DPK.V.80.80.55.2, DPK.V.80.80.75.2

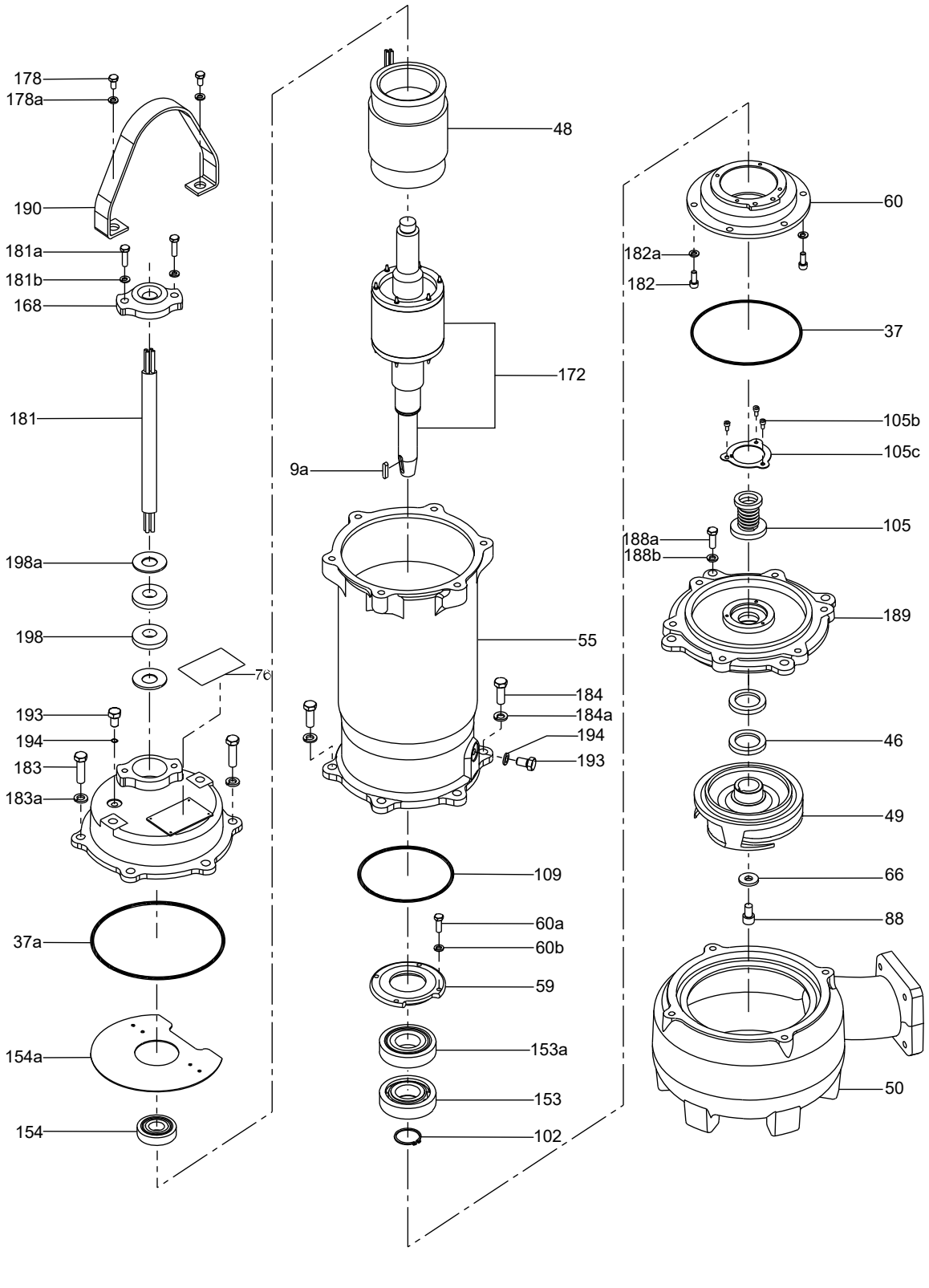

DPK.V.80.80.37.4, DPK.V.80.80.55.4, DPK.V.80.80.75.4

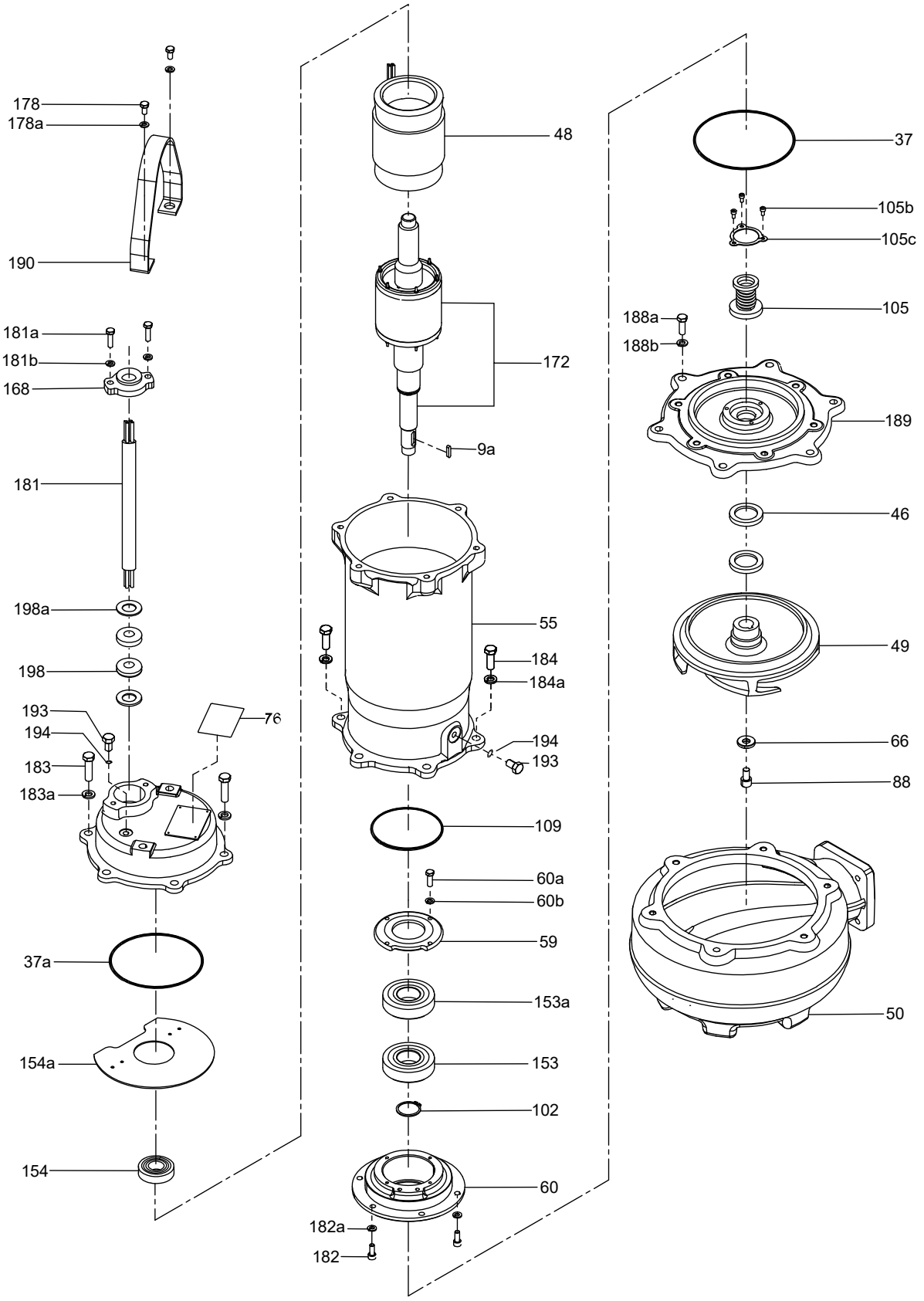

28. GT Tanks

GT-U 10 bar, coated steel flange

Bladder

Pos.	Description	GT-U-								
		80	100	200	300	400	500	600	800	1000
	Kit No	96588697	96588699	96588698	96588698	96588698	96588742	96846168	96846170	96846182
2	Bladder	1	1	1	1	1	1	1	1	1

Pos.	Description	GT-U-				
		1500	2000	3000	4000	5000
	Kit No	96588746	96588747	96588748	96846184	96846185
2	Bladder	1	1	1	1	1

GT-U 16 bar, coated steel flange

Bladder

Pos.	Description	GT-U-								
		80	100	200	300	400	500	600	800	1000
	Kit No	96588697	96588699	96588698	96588698	96588698	96588742	96846168	96846170	96846182
2	Bladder	1	1	1	1	1	1	1	1	1

Pos.	Description	GT-U-				
		1500	2000	3000	4000	5000
	Kit No	96588746	96588747	96588748	96846184	96846185
2	Bladder	1	1	1	1	1

GT-U 25 bar, coated steel flange

Bladder

Pos.	Description	GT-U-										
		80	120	180	300	400	600	800	1000	1500	2000	3000
	Kit No	96588741	96588740	96588742	96588698	96588698	96588743	96588744	96588745	96588746	96588747	96588748
2	Bladder	1	1	1	1	1	1	1	1	1	1	1

GT-U 10 bar, stainless steel flange

Bladder

Pos.	Description	GT-U-								
		80	100	200	300	400	500	600	800	1000
	Kit No	96588697	96588699	96588741	96588741	96588698	96588742	96846168	96846170	96588745
2	Bladder	1	1	1	1	1	1	1	1	1

GT-U 16 bar, stainless steel flange

Bladder

Pos.	Description	GT-U-								
		80	100	200	300	400	500	600	800	1000
	Kit No	96588697	96588699	96588698	96588698	96588698	96588742	96846168	96846170	96846182
2	Bladder	1	1	1	1	1	1	1	1	1

GT-U

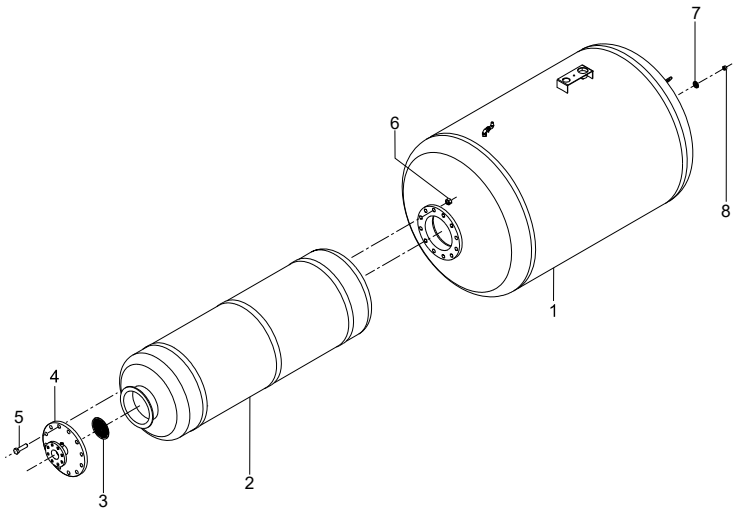

TM062351

29. HS

Before order the service kit, please identify the model by checking its type key.

- HS, with sleeve, see section HS, with sleeve to section Packing gland.

Example 1, pump with old type key:	**HS**	**125**	**-100**	**-305**	**/273.1**	**5/1**	**F**	**A**	**BBVP**	**1**

Example 2, pump with new type key:	**HS**	**125**	**-100**	**-305X**	**/273.1**	**, (W)**	**1**	**F1**	**A**	**S**	**BBQE**	**1**

Material code: A, C, B, K

- HS, without sleeve, see section HS, without sleeve and section 50/60 Hz.

Example, pump with new type key:	**HS**	**125**	**-100**	**-305X**	**/273.1**	**, (W)**	**1**	**F1**	**D**	**S**	**BBQE**	**1**

Material code: D, E, J, L

Related information

HS, with sleeve
50/60 Hz
Packing gland
HS, without sleeve
50/60 Hz

HS, with sleeve

Example 1, pump with old type key:	**HS**	**125**	**-100**	**-305**	**/273.1**	**5/1**	**F**	**A**	**BBVP**	**1**

Example 2, pump with new type key:	**HS**	**125**	**-100**	**-305X**	**/273.1**	**, (W)**	**1**	**F1**	**A**	**S**	**BBQE**	**1**

Material code: A, C, B, K

50/60 Hz

Bearing

Pos.	Description	HS 65 HS 100-80-242	HS 100-80-242XE	HS 100-80-356 HS 125 HS 150 HS 200-150-305	HS 200-150-381 HS 200-150-483 HS 250 HS 300-250-305
	Kit No	*96827576*	*96827582*	*96827577*	*96827578*
53	Bearing	1	1	1	1
54	Bearing	1	1	1	1
54c	Washer	-	-	-	1
54d	Snap ring	-	-	-	1
109b	Gasket	-	-	-	2
113e	Gasket	2	2	2	-

Pos.	Description	HS 200-150-483 X6 HS 200-150-508	HS 300-250-381	HS 350-250-498 HS 350-250-630	HS 300-200-489 HS 350-300-508 HS 400-350-397
	Kit No	*96827579*	*96827581*	*96840087*	*96840088*
53	Bearing	1	1	1	1
54	Bearing	1	1	1	1
54c	Washer	1	-	-	2
54d	Snap ring	1	1	1	1
109b	Gasket	2	-	-	-
110a	Gasket	2	-	-	-
113e	Gasket	-	2	2	2
113f	Lip seal	2	-	2	2
113g	Lip seal	-	-	1	1

Gasket

Pos.	Description	HS 65-50-242 HS 65-50-331 HS 100-80-242	HS 100-80-356 HS 125-100-X	HS 150-125-305	HS 150-125-381	HS 200-150-305X
	Kit No	*96827585*	*96827587*	*96827593*	*96827586*	*96827595*
72a	Gasket	1	2	2	2	2
79	Slinger	2	2	2	2	2
109b	Gasket	2	2	2	2	2
113e	Gasket	2	1	1	1	1

Pos.	Description	HS 200-150-483	HS 200-150-381 HS 200-150-381B	HS 250-200-305	HS 250-200-381	HS 300-250-305
	Kit No	*96840076*	*96827588*	*96827603*	*96827609*	*96827613*
66	O-ring	-	-	-	-	2
72a	Gasket	1	1	1	1	1
79	Slinger	2	2	2	2	2
109	O-ring	2	2	2	2	
109b	Gasket	-	2	2	2	2
110	O-ring	2	-	-	-	-

Pos.	Description	HS 200-150-508	HS 300-200-489	HS 350-250-498	HS 350-250-630	HS 350-300-508
	Kit No	*96827599*	*96827611*	*96840077*	*96840078*	*96840079*
66	O-ring	2	-	-	2	-
72a	Gasket	1	1	1	1	1
79	Slinger	2	2	2	2	2
109	O-ring	-	2	2	2	2
109a	O-ring	-	2	2	2	2
110	O-ring	-	2	2	-	2
110a	Gasket	2	-	-	-	-
113e	Gasket	-	2	2	2	2

Pos.	Description	HS 300-250-381	HS 400-350-397
	Kit No	*96827590*	*96840080*
72a	Gasket	1	1
79	Slinger	-	2
109	O-ring	1	2
109a	O-ring	-	2
110	O-ring	2	2
113e	Gasket	2	2
113f	Lip seal	-	2
113g	Lip seal	-	1

Hardware

Pos.	Description	HS 65-50-242 HS 65-50-331 HS 100-80-242 HS 100-80-242XE	HS 100-80-356	HS 125-100-280 HS 125-100-305	HS 125-100-381	HS 150-125-305 HS 200-150-305C
	Kit No	*96827660*	*96827622*	*96827624*	*96827626*	*96827629*
26	Stud		28	28	28	
26b	Roll pin	2	2	2	2	2
26c	Cap screw	12	12	10	12	54
26d	Cap screw	8	4	4	4	4
36	Nut	-	28	28	28	-
114a	Cap screw	8	8	8	8	8

Pos.	Description	HS 150-125-381 HS 200-150-305A	HS 200-150-381 HS 200-150-381B HS 250-200-305 HS 250-200-381 HS 300-250-305	HS 200-150-483 HS 200-150-483XE	HS 200-150-508	HS 300-200-489 HS 350-300-508
	Kit No	*96827632*	*96827636*	*96827640*	*96827644*	*96827649*
26b	Roll pin	2	2	2	2	2
26c	Cap screw	50	56	60	26	60
26d	Cap screw	4	4	4	4	4
58a	Cap screw	-	-	8	4	8
114	Screw	-	-	-	-	24
114a	Cap screw	8	4	8	8	8
114b	Cap screw	-	4	16	12	12

Pos.	Description	HS 300-250-381	HS 350-250-498	HS 350-250-630	HS 400-350-397
	Kit No	***96827651***	***96840082***	***96840083***	***96840085***
26b	Roll pin	2	2	2	2
26c	Cap screw	34	36	32	30
26d	Cap screw	-	4	4	4
58a	Cap screw	8	8	8	8
114	Cap screw	24	28	28	24
114a	Cap screw	8	8	12	8

Impeller

The kit consists of impeller (pos. 49) and key (pos. 11 and 11a).

Description	Kit No			
	Silicon bronze (B21)	Nickel-aluminium-bronze (B22)	AISI-304 (H304)	AISI-316 (H316)
HS 65-50-242	*96827641*	*96903628*	*96903630*	*96903631*
HS 65-50-331	*96827639*	*96903632*	*96903633*	*96903634*
HS 100-80-242	*96827663*	*96903635*	*96903636*	*96903637*
HS 100-80-242 XE	*96827662*	*96903638*	*96903639*	*96903640*
HS 100-80-356	*96827666*	*96903641*	*96903642*	*96903643*
HS 100-80-356 B	*97735873*	*97931497*	*97932509*	*97932511*
HS 125-100-280	*96827668*	*96903644*	*96903645*	*96903647*
HS 125-100-305	*96827670*	*96903648*	*96903649*	*96903650*
HS 125-100-381	*96827669*	*96903651*	*96903652*	*96903653*
HS 125-100-388	*97735854*	*97735940*	-	-
HS 150-125-305	*96827667*	*96903654*	*96903655*	*96903656*
HS 150-125-381	*96827665*	*96903657*	*96903658*	*96903659*
HS 200-150-305A	*96827664*	*96903660*	*96903661*	*96903662*
HS 200-150-305C	*96827661*	*96903663*	*96903664*	*96903665*
HS 200-150-381	*96827659*	*96903667*	*96903668*	*96903669*
HS 200-150-381B	*97937562*	*97937563*	*97937564*	*97937565*
HS 200-150-483	*96840089*	*96903670*	*96903671*	*96903682*
HS 200-150-483 X6	*96843910*	*96903683*	*96903684*	*96903687*
HS 200-150-508	*96827655*	*96903688*	*96903689*	*96903690*
HS 250-200-305	*96827653*	*96903691*	*96903692*	*96903693*
HS 250-200-381	*96827652*	*96903694*	*96903695*	*96903696*
HS 300-200-489	*96827650*	*96903697*	*96903698*	*96903699*
HS 300-250-305	*97735871*	*97931510*	*97948029*	*97932522*
HS 300-250-305B	*97735871*	*97931510*	*97948029*	*97932522*
HS 300-250-381	*96827646*	*96903703*	*96903704*	*96903705*
HS 350-250-498	*96840090*	*96903706*	*96903707*	*96903708*
HS 350-250-630	*96840091*	*96903709*	*96903710*	*96903712*
HS 350-300-508	*96840102*	*96903713*	*96903714*	*96903715*
HS 400-350-397	*96840103*	*96903716*	*96903717*	*96903718*

Packing

Pos.	Description	HS 65 HS 100-80-242	HS 100-80-242 XE	HS 100-80-356 HS 125 HS 150 HS 200-150-305	HS 200-150-381 HS 200-150-483 HS 250 HS 300-250-305	HS 200-150-483 X6
	Kit No	***96920260***	***96920261***	***96920262***	***96920263***	***96920264***
107	Packing ring	10	12	10	10	10
108	Distribution ring	2	2	2	2	2
-	Snap ring	2	-	2	2	2

Pos.	Description	HS 200-150-508	HS 300-200-489 HS 350-300-508 HS 400-350-397	HS 300-250-381	HS 350-250-498 HS 350-250-630
	Kit No	***96920265***	***96920266***	***96920267***	***96920268***
107	Packing ring	8	10	10	10
108	Distribution ring	2	2	2	2
-	Snap ring	2	2	2	2

Packing gland

Pos.	Description	HS 65 HS 100-80-242	HS 100-80-242 XE	HS 100-80-356 HS 125 HS 150 HS 200-150-305	HS 200-150-381 HS 200-150-483 HS 250-200-305 HS 250-200-381 HS 300-250-305	HS 200-150-483 X6 HS 200-150-508
	Kit No	***96920269***	***96920270***	***96920271***	***96920272***	***96920273***
106	Packing gland	2	2	2	2	2
115	Stud	4	4	4	4	4
115a	Nut	4	4	4	4	4

Pos.	Description	HS 300-200-489 HS 350-300-508 HS 400-350-397	HS 300-250-381	HS 350-250-498 HS 350-250-630
	Kit No	***96920274***	***96920275***	***96920276***
106	Packing gland	2	2	2
115	Stud	4	4	4
115a	Nut	4	4	4

Shaft sleeve, bronze (B18)

Pos.	Description	HS 100-80-242 XE	HS 100-80-356 HS 125 HS 200-150-305A	HS 150 HS 200-150-305C	HS 200-150-381 HS 250-200-305 HS 250-200-381 HS 300-250-305	HS 200-150-483
	Kit No	***96827634***	***96827638***	***96827637***	***96827635***	***96843909***
66	O-ring	2	2	2	2	2
67a	Impeller nut	1	-	-	1	1
67b	Impeller nut	1	-	-	1	1
116	Sleeve	2	-	-	2	2
116a	Locking sleeve	-	1	1	-	-
116b	Locking sleeve	-	1	1	-	-
116e	Screw	4	-	-	4	4

Pos.	Description	HS 200-150-483 X6	HS 200-150-508	HS 300-200-489	HS 200-150-483 X6	HS 300-250-381
	Kit No	*96827631*	*96827630*	*96827628*	*96827631*	*96827627*
66	O-ring	2	2	2	2	2
67a	Impeller nut	1	1	1	1	1
67b	Impeller nut	1	1	1	1	1
116	Sleeve	2	2		2	2
116c	Inner sleeve	-	-	2	-	-
116d	Shaft sleeve	-	-	1	-	-
116e	Screw	4	4	4	4	4

Pos.	Description	HS 350-250-498	HS 350-250-630	HS 350-300-508	HS 400-350-397
	Kit No	*96840104*	*96840105*	*96840106*	*96840107*
66	O-ring	2	2	2	2
67a	Impeller nut	1	1	1	1
67b	Impeller nut	1	1	1	1
116c	Inner sleeve	2	2	2	2
116d	Shaft sleeve	2	2	2	2
116e	Screw	4	4	4	4

Shaft sleeve, AISI 303 (H303)

Pos.	Description	HS 100-80-242 XE	HS 100-80-356 HS 125 HS 200-150-305A	HS 150 HS 200-150-305C	HS 200-150-381 HS 250-200-305 HS 250-200-381 HS 300-250-305	HS 200-150-483
	Kit No	*96903963*	*96903964*	*96903965*	*96903966*	*96903971*
66	O-ring	2	2	2	2	2
67a	Impeller nut	1	-	-	1	1
67b	Impeller nut	1	-	-	1	1
116	Sleeve	2	-	-	2	2
116a	Locking sleeve	-	1	1	-	-
116b	Locking sleeve	-	1	1	-	-
116e	Screw	4	-	-	4	4

Pos.	Description	HS 200-150-483 X6	HS 200-150-508	HS 300-200-489	HS 200-150-483 X6	HS 300-250-381
	Kit No	*96903982*	*96903969*	*96903985*	*96903982*	*96903967*
66	O-ring	2	2	2	2	2
67a	Impeller nut	1	1	1	1	1
67b	Impeller nut	1	1	1	1	1
116	Sleeve	2	2	-	2	2
116c	Inner sleeve	-	-	2	-	-
116d	Shaft sleeve	-	-	1	-	-
116e	Screw	4	4	4	4	4

Pos.	Description	HS 350-250-498	HS 350-250-630	HS 350-300-508	HS 400-350-397
	Kit No	*96903983*	*96903970*	*96903984*	*96903986*
66	O-ring	2	2	2	2
67a	Impeller nut	1	1	1	1
67b	Impeller nut	1	1	1	1
116c	Sleeve	2	2	2	2
116d	Shaft sleeve	2	2	2	2
116e	Screw	4	4	4	4

Shaft seal (BBVP)

Pos.	Description	HS 65, HS 100-80-242		HS 100-80-242 XE		HS 100-80-356 HS 125		HS 150-125-305	
		PN16	PN10	PN16	PN10	PN16	PN10	PN16	PN10
	Kit No	*96840108*	*96902648*	*96840109*	*96902657*	*96840110*	*96902669*	*96840111*	*96902682*
53	Bearing	1	1	1	1	1	1	1	1
54	Bearing	1	1	1	1	1	1	1	1
66	O-ring	-	-	2	-	2	2	-	-
72a	Gasket	1	1	1	1	1	1	1	1
79	Slinger	2	2	2	2	2	2	2	2
105	Shaft seal	2	2	2	2	2	2	2	2
109b	Gasket	2	2	2	2	-	-	2	2
113e	Gasket	2	2	2	2	2	2	2	2

Pos.	Description	HS 150-125-381		HS 200-150-305		HS 200-150-381 HS 200-150-483		HS 200-150-483 X6 HS 200-150-508	
		PN16	PN10	PN16	PN10	PN16	PN10	PN16	PN10
	Kit No	*96840112*	*96902688*	*96840113*	*96902694*	*96840114*	*96902698*	*96840115*	*96902701*
53	Bearing	1	1	1	1	1	1	1	1
54	Bearing	1	1	1	1	1	1	1	1
66	O-ring	-	-	2	2	-	-	2	2
72a	Gasket	1	1	1	1	1	1	1	1
79	Slinger	2	2	2	2	2	2	2	2
105	Shaft seal	2	2	2	2	2	2	2	2
109	O-ring	2	2	2	2	2	2	-	-
109b	Gasket	-	-	-	-	2	2	2	2
110	O-ring	-	-	-	-	-	-	2	-
110a	Gasket	-	-	-	-	-	-	2	2
113e	Gasket	2	2	2	2	-	-	-	-
113f	Lip seal	-	-	-	-	-	-	2	2

Pos.	Description	HS 250-200-305		HS 250-200-381	
		PN16	PN10	PN16	PN10
	Kit No	*96840116*	*96902708*	*96840117*	*96902714*
53	Bearing	1	1	1	1
54	Bearing	1	1	1	1
72a	Gasket	1	1	1	1
79	Slinger	2	2	2	-
105	Shaft seal	2	2	2	2
109	O-ring	2	2	2	2
109b	Gasket	2	2	2	2

Pos.	Description	HS 300-200-489		HS 300-250-305		HS 300-250-381		HS 350-250-498	
		PN16	PN10	PN16	PN10	PN16	PN10	PN16	PN10
	Kit No	*96840118*	*96840118*	*96840119*	*96902723*	*96840120*	*96902736*	*96840121*	*96840121*
53	Bearing	1	1	1	1	1	1	1	1
54	Bearing	1	1	1	1	1	1	1	1
72a	Gasket	1	1	1	1	1	1	1	1
79	Slinger	2	2	2	2	2	2	2	2
105	Shaft seal	2	2	2	2	2	2	2	2
109	O-ring	2	2	2	2	2	2	2	2
109a	O-ring	2	2	-	-	-	-	2	-
109b	Gasket	-	-	2	2	-	-	-	-
110	O-ring	2	2	-	-	2	2	2	2
113e	Gasket	2	2	-	-	2	2	2	2
113f	Lip seal	2	2	-	-	-	-	2	2
113g	Lip seal	1	1	-	-	-	-	2	2

Pos.	Description	HS 350-250-630		HS 350-300-508		HS 400-350-397	
		BBVP	BBVP	BBVP	BBVP	BBVP	BBVP
		PN16	PN10	PN16	PN10	PN16	PN10
	Kit No	*96843907*	*96843907*	*96843908*	*96843908*	*96840122*	*96840122*
53	Bearing	1	1	1	1	1	1
54	Bearing	1	1	1	1	1	1
72a	Gasket	1	1	1	1	1	1
79	Slinger	2	2	2	2	2	2
105	Shaft seal	2	2	2	2	2	2
109	O-ring	2	2	2	2	2	2
109a	O-ring	2	-	2	2	2	2
110	O-ring	2	2	2	2	2	2
113e	Gasket	2	2	2	2	2	2
113f	Lip seal	2	2	2	2	2	2
113g	Lip seal	2	2	2	2	2	2

Shaft seal (BBQV)

Pos.	Description	HS 65, HS 100-80-242		HS 100-80-242 XE		HS 100-80-356 HS 125		HS 150-125-305	
		PN16	PN10	PN16	PN10	PN16	PN10	PN16	PN10
	Kit No	*96902647*	*96902650*	*96902654*	*96902662*	*96902664*	*96902670*	*96902671*	*96902683*
53	Bearing	1	1	1	1	1	1	1	1
54	Bearing	1	1	1	1	1	1	1	1
66	O-ring	-	-	-	-	2	2	-	-
72a	Gasket	1	1	1	1	1	1	1	1
79	Slinger	2	2	2	2	2	2	2	2
105	Shaft seal	2	2	2	2	2	2	2	2
109	O-ring	-	-	-	-	2	2	2	2
109b	Gasket	2	2	2	2	-	-	-	-
113e	Gasket	2	2	2	2	2	2	2	2

Pos.	Description	HS 150-125-381		HS 200-150-305		HS 200-150-381 HS 200-150-483		HS 200-150-483 X6 HS 200-150-508	
		PN16	PN10	PN16	PN10	PN16	PN10	PN16	PN10
	Kit No	*96902684*	*96902691*	*96902693*	*96902695*	*96902696*	*96902699*	*96902700*	*96902702*
53	Bearing	1	1	1	1	1	1	1	1
54	Bearing	1	1	1	1	1	1	1	1
66	O-ring	-	-	2	2	-	-	2	2
72a	Gasket	1	1	1	1	1	1	1	1
79	Slinger	2	2	2	2	2	2	2	2
105	Shaft seal	2	2	2	2	2	2	2	2
109	O-ring	2	2	2	2	2	2	-	-
109b	Gasket	-	-	-	-	2	2	2	2
110a	Gasket	-	-	-	-	-	-	2	2
113e	Gasket	2	2	2	2	-	-	-	-
113f	Lip seal	-	-	-	-	-	-	2	2

Pos.	Description	HS 250-200-305		HS 250-200-381	
		PN16	PN10	PN16	PN10
	Kit No	*96902705*	*96902709*	*96902713*	*96902715*
53	Bearing	1	1	1	1
54	Bearing	1	1	1	1
72a	Gasket	1	1	1	1
79	Slinger	2	2	-	-
105	Shaft seal	2	2	2	2
109	O-ring	2	2	2	2
109b	Gasket	2	2	2	2

Pos.	Description	HS 300-200-489		HS 300-250-305		HS 300-250-381		HS 350-250-498	
		PN16	PN10	PN16	PN10	PN16	PN10	PN16	PN10
	Kit No	*96902717*	*96902717*	*96902719*	*96902729*	*96902732*	*96902738*	*96902743*	*96902743*
53	Bearing	1	1	1	1	1	1	1	1
54	Bearing	1	1	1	1	1	1	1	1
72a	Gasket	1	1	1	1	1	1	1	1
79	Slinger	2	2	2	2	2	2	2	2
105	Shaft seal	2	2	2	2	2	2	2	2
109	O-ring	2	2	2	2	2	2	2	2
109a	O-ring	2	2	-	-	-	-	-	-
109b	Gasket	-	-	2	2	-	-	-	-
110	O-ring	2	2	-	-	2	2	2	2
113e	Gasket	2	2	-	-	2	2	2	2
113f	Lip seal	2	2	-	-	-	-	2	2
113g	Lip seal	1	1	-	-	-	-	2	2

Pos.	Description	HS 350-250-630		HS 350-300-508		HS 400-350-397	
		PN16	PN10	PN16	PN10	PN16	PN10
	Kit No	*96902744*	*96902744*	*96902747*	*96902747*	*96902757*	*96902757*
53	Bearing	1	1	1	1	1	1
54	Bearing	1	1	1	1	1	1
72a	Gasket	1	1	1	1	1	1
79	Slinger	2	2	2	2	2	2
105	Shaft seal	2	2	2	2	2	2
109	O-ring	2	2	2	2	2	2
109a	O-ring	-	-	2	2	2	2
110	O-ring	2	2	2	2	2	2
113e	Gasket	2	2	2	2	2	2
113f	Lip seal	2	2	2	2	2	2
113g	Lip seal	2	2	2	2	2	2

Wear ring, bronze (B18)

Pos.	Description	HS 65-50-242 HS 65-50-242 331	HS 100-80-242 HS 100-80-242 XE	HS 100-80-356B	HS 100-80-356 HS 125-100-280 HS 125-100-381	HS 125-100-388
	Kit No	*96827589*	*96827617*	*97735851*	*96827614*	*97735910*
24	Roll pin	2	2	2	2	2
45b/c	Wear ring	2	2	2	2	2
65	Snap ring	2	2	-	2	-

Pos.	Description	HS 125-100-305	HS 150-125-305 HS 150-125-381	HS 200-150-305A	HS 200-150-305C
	Kit No	*96827612*	*96827610*	*96827608*	*96827607*
24	Roll pin	2	2	2	2
45b/c	Wear ring	2	2	2	2
65	Snap ring	2	-	2	-

Pos.	Description	HS 200-150-381	HS 200-150-483 HS 200-150-483 X6	HS 200-150-508	HS 250-200-305
	Kit No	*96827606*	*96840041*	*96827604*	*96827602*
24	Roll pin	2	2	2	2
45a/b/c	Wear ring	2	2	2	2
65	Snap ring	-	2	-	-

Pos.	Description	HS 300-200-489	HS 350-250-498	HS 350-250-630	HS 350-300-508
	Kit No	*96827600*	*96840072*	*96840073*	*96840074*
24	Roll pin	2	2	-	-
45a/b/c	Wear ring	2	2	2	2
65	Snap ring	-	-	2	2

Pos.	Description	HS 400-350-397	HS 250-200-381	HS 300-250-305	HS 300-250-305B	HS 300-250-381
	Kit No	*96840075*	*96827601*	*96827598*	*97932523*	*96827596*
24	Roll pin	-	2	2	2	2
45a/b/c	Wear ring	2	2	2	2	2
65	Snap ring	-	-	-	-	-

Wear ring, stainless steel (N5)

Pos.	Description	HS 65-50-242 HS 65-50-242 331	HS 100-80-242 HS 100-80-242 XE	HS 100-80-356B	HS 100-80-356 HS 125-100-280 HS 125-100-381	HS 125-100-388
	Kit No	*96927584*	*96927585*	*97933098*	*96927586*	*97735921*
24	Roll pin	2	2	2	2	2
45b/c	Wear ring	2	2	2	2	2
65	Snap ring	2	2	-	2	-

Pos.	Description	HS 125-100-305	HS 150-125-305 HS 150-125-381	HS 200-150-305A	HS 200-150-305C
	Kit No	*96927587*	*96927588*	*96927589*	*96927590*
24	Roll pin	2	2	2	2
45b/c	Wear ring	2	2	2	2
65	Snap ring	2	-	2	-

Pos.	Description	HS 200-150-381	HS 200-150-483 HS 200-150-483 X6	HS 200-150-508	HS 250-200-305
	Kit No	*96927591*	*96927602*	*96927603*	*96927604*
24	Roll pin	2	2	2	2
45a/b/c	Wear ring	2	2	2	2
65	Snap ring	-	2	-	-

Pos.	Description	HS 300-200-489	HS 350-250-498	HS 350-250-630	HS 350-300-508
	Kit No	*96927606*	*96927609*	*96927610*	*96927611*
24	Roll pin	2	2	-	-
45a/b/c	Wear ring	2	2	2	2
65	Snap ring	-	-	2	2

Pos.	Description	HS 400-350-397	HS 250-200-381	HS 300-250-305	HS 300-250-305BB	HS 300-250-381
	Kit No	*96927612*	*96927605*	*96927607*	*97948031*	*96927608*
24	Roll pin	-	2	2	2	2
45a/b/c	Wear ring	2	2	2	2	2
65	Snap ring	-	-	-	-	-

HS 65-50-242, HS 65-50-331, HS 100-80-242

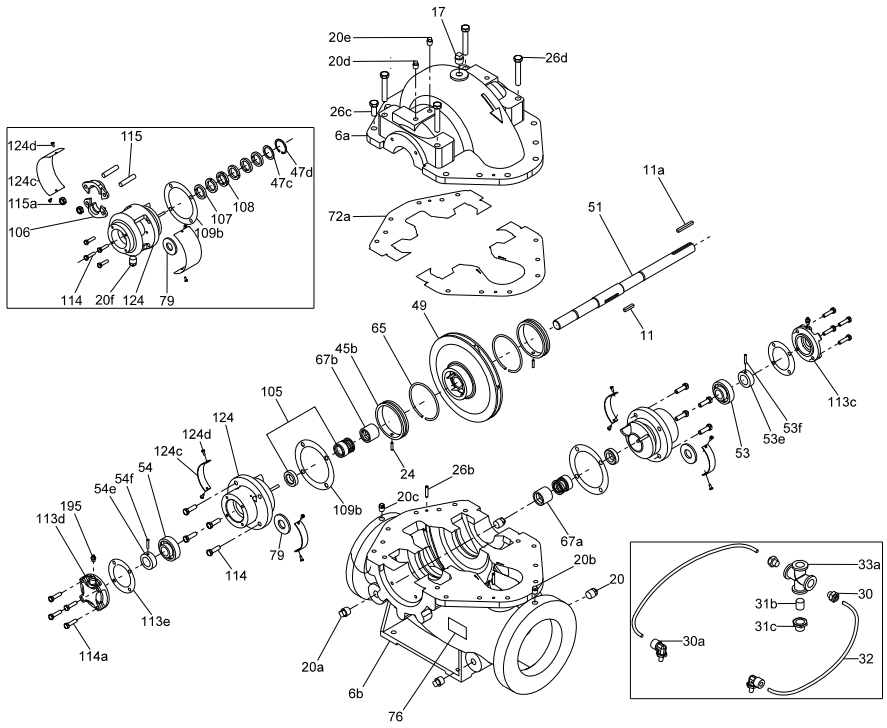

TM039940

HS 125-100-381, HS 125-100-388

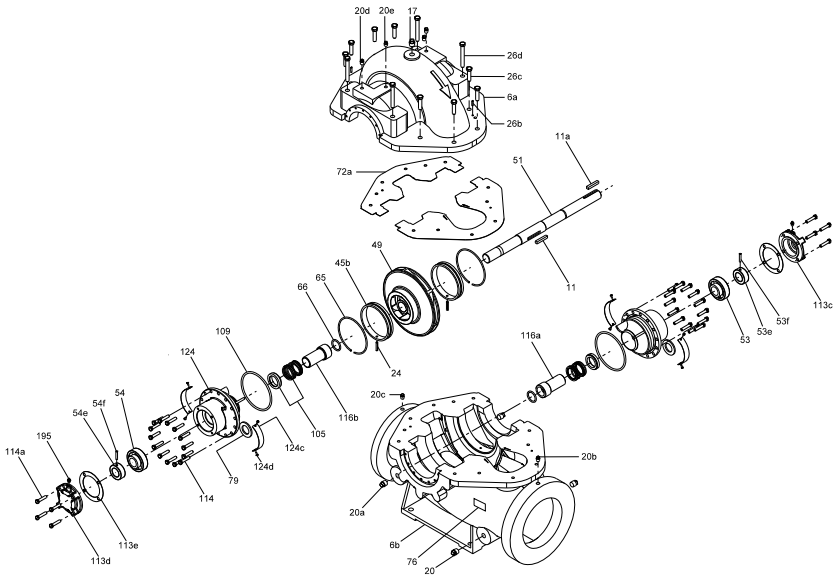

TM039948

HS 150-125-305, HS 150-125-381, HS 200-150-305C

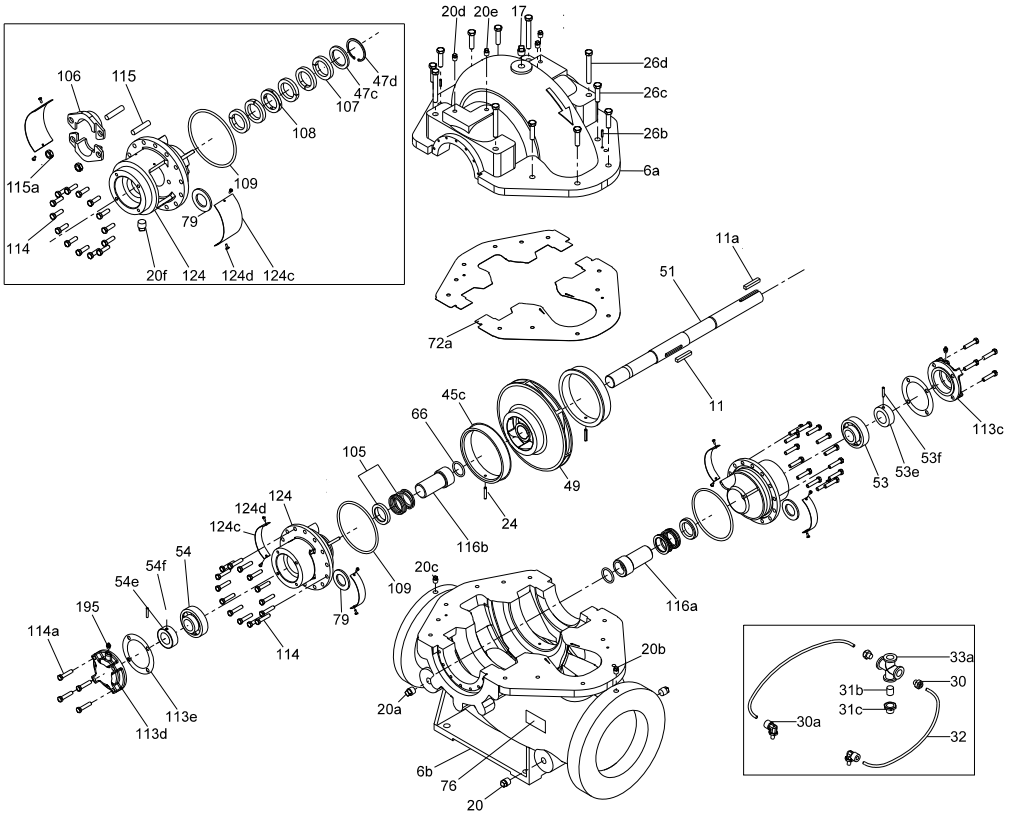

TM039950

HS 125-100-280, HS 125-100-305, HS 100-80-356, HS 100-80-356B, HS 200-150-305A

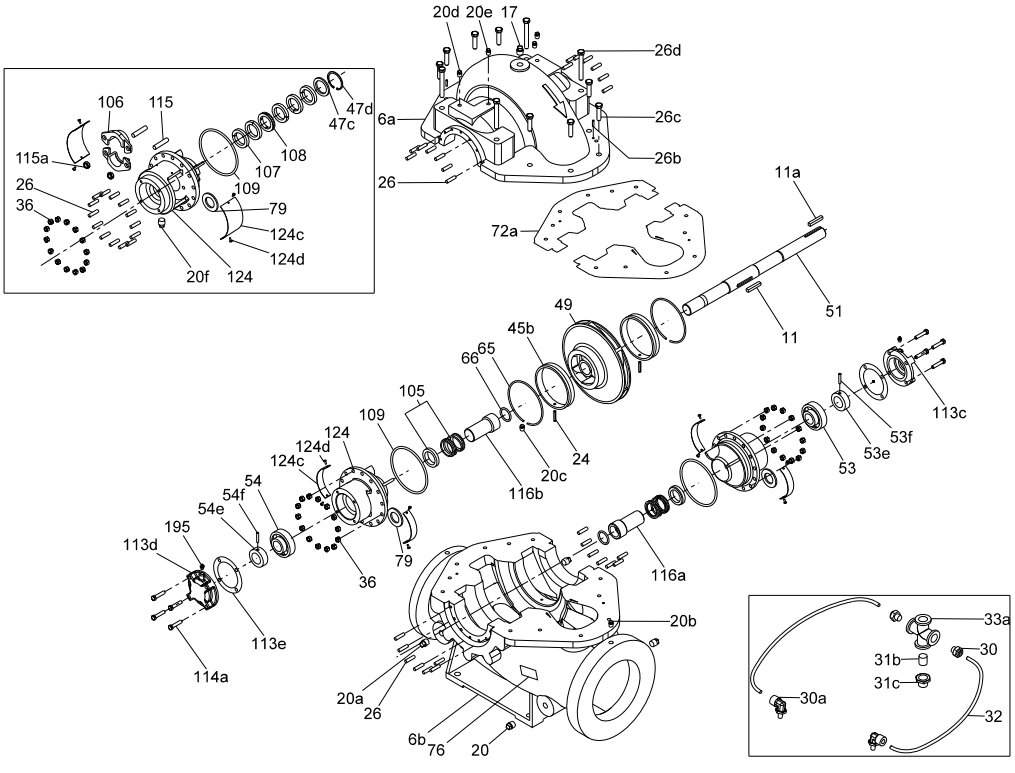

TM039943

HS 200-150-483 XE

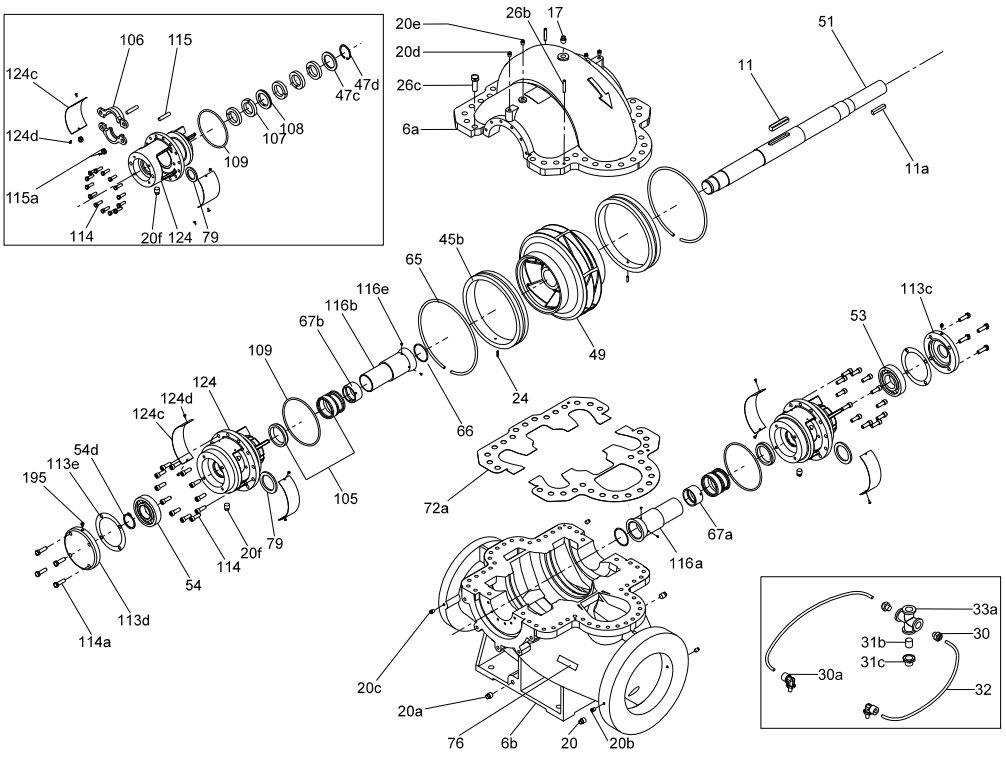

HS 100-80-242

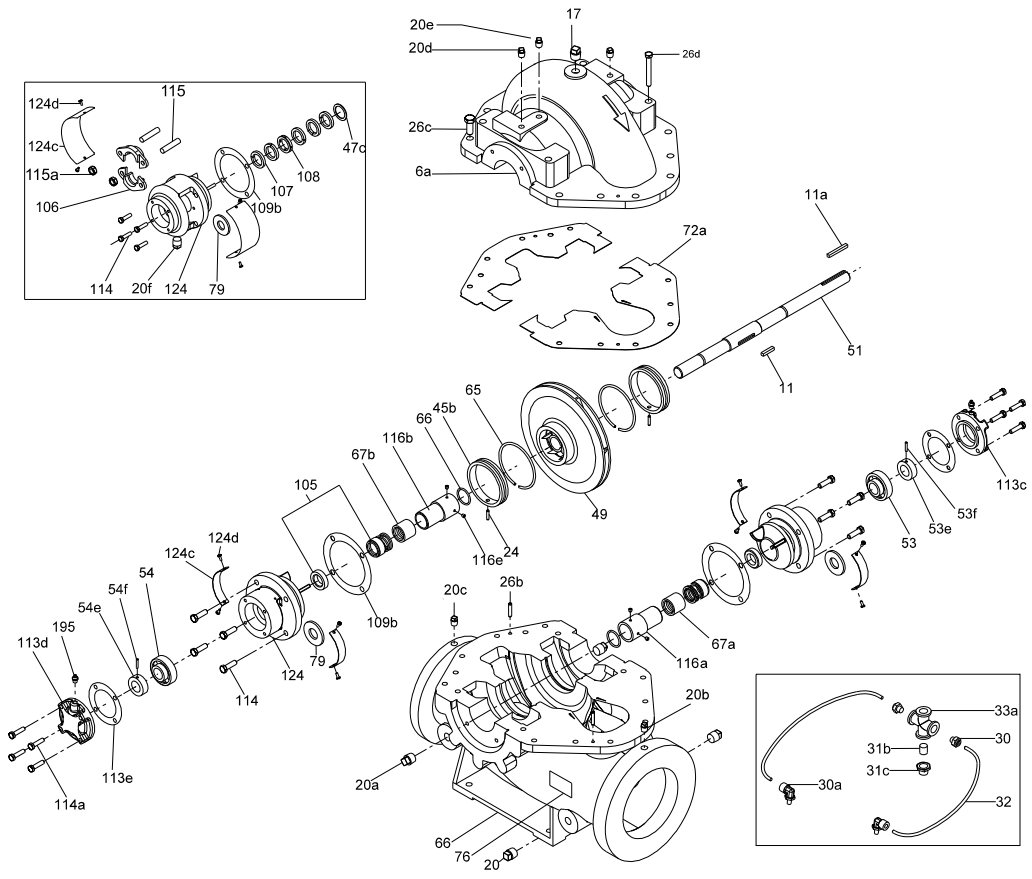

HS 200-150-381, HS 200-150-381B, HS 250-200-305, HS 250-200-381, HS 300-250-305

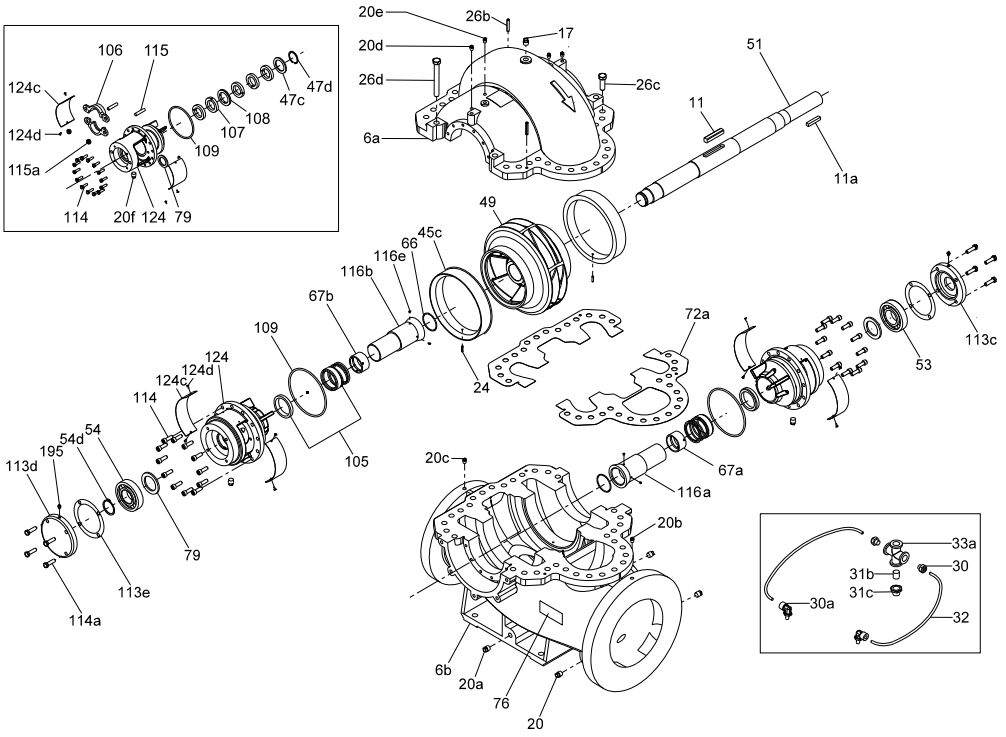

HS 300-250-381

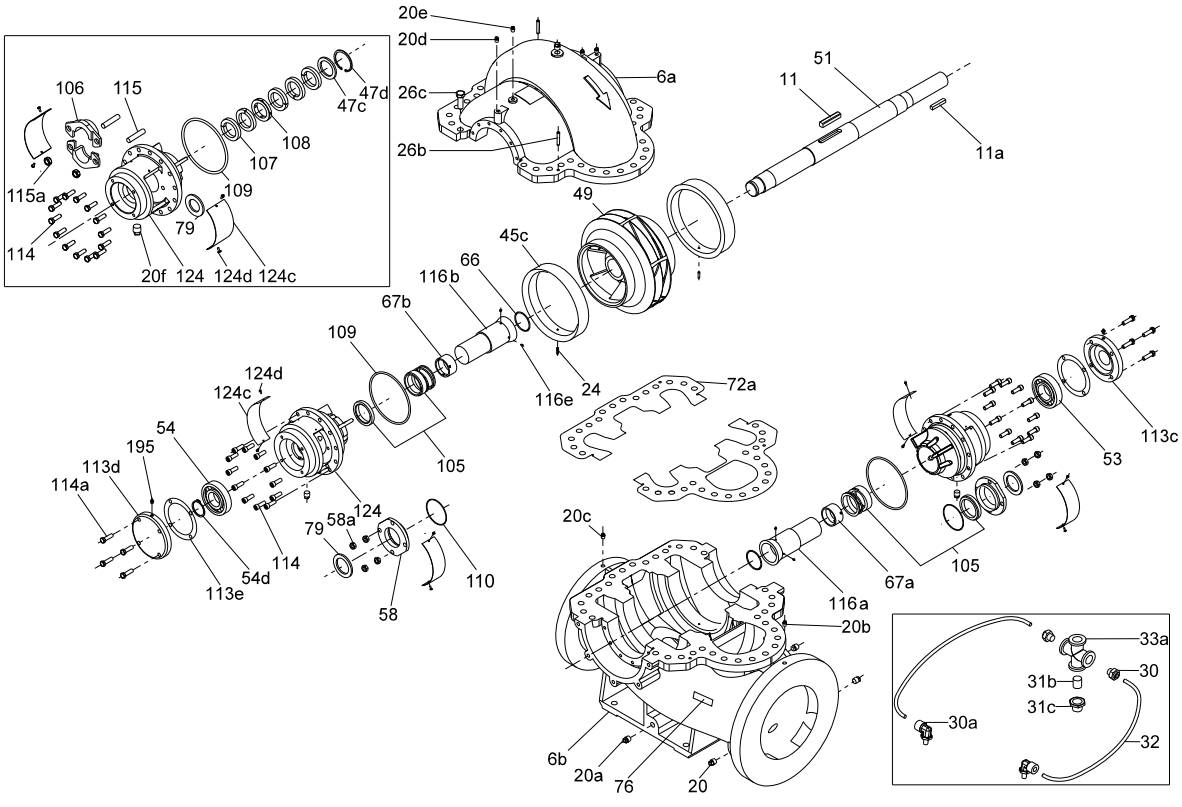

HS 400-350-397

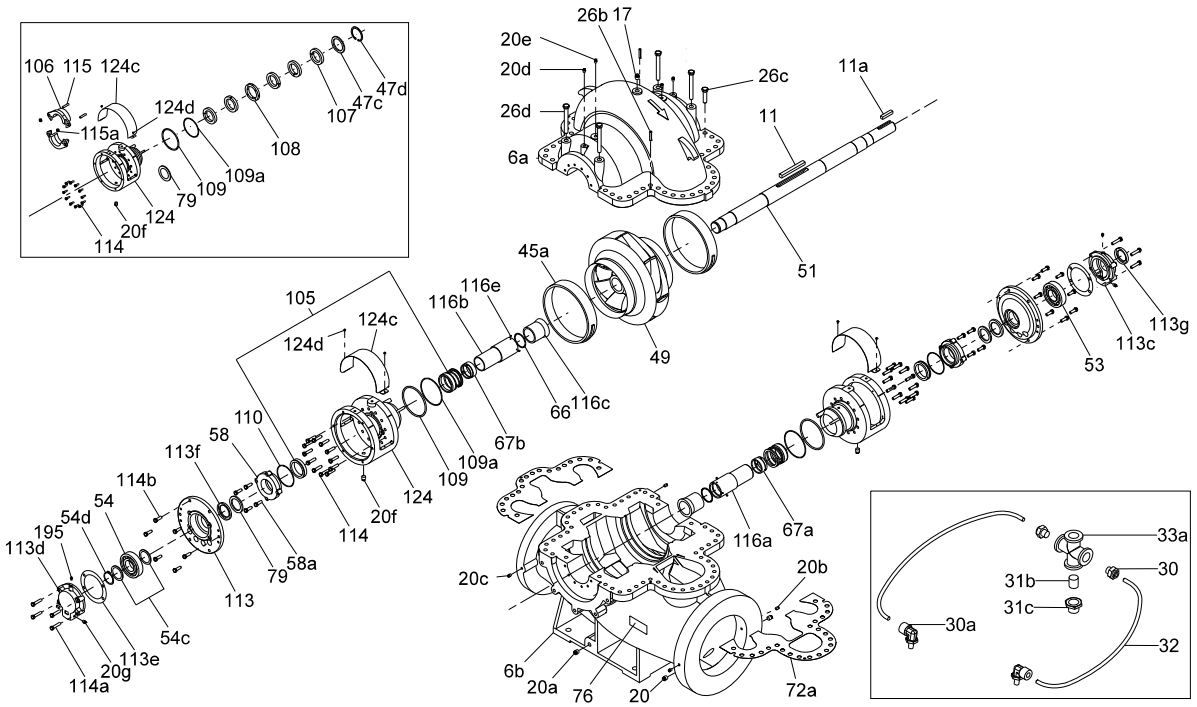

HS 350-250-498, HS 350-250-630

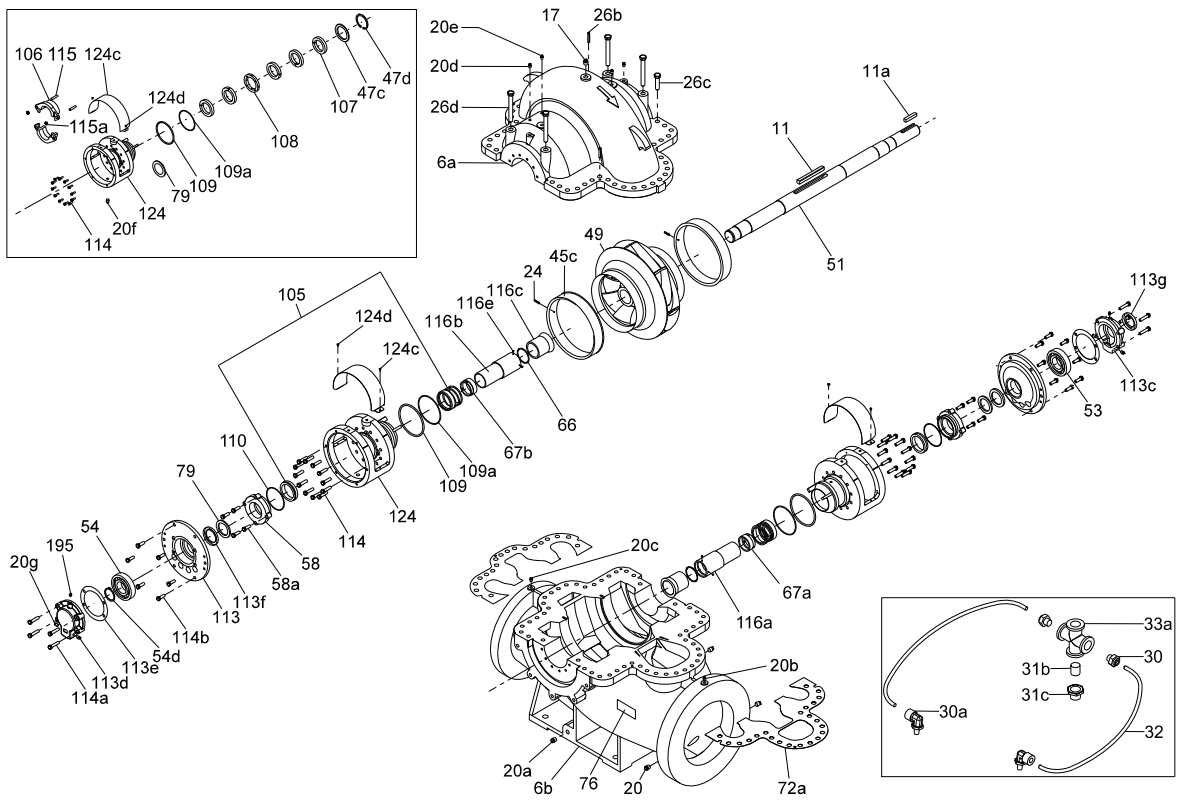

HS 200-150-508

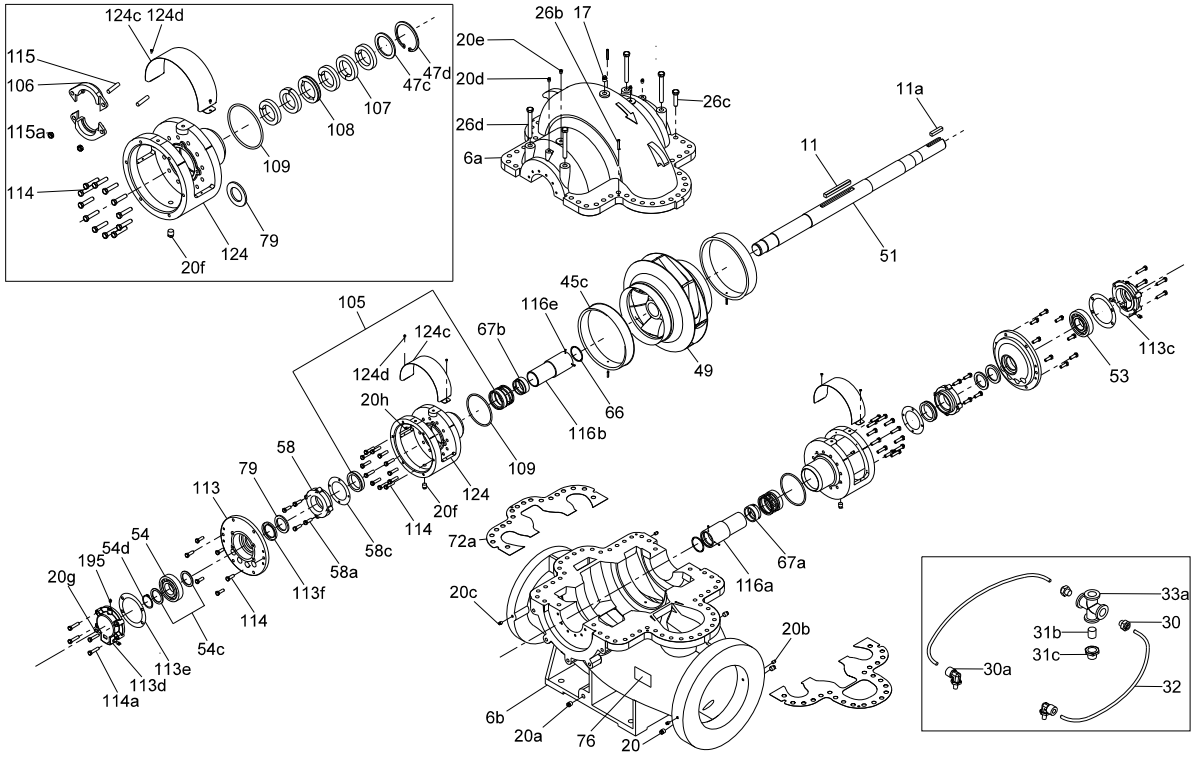

TM039945

HS 200-150-483

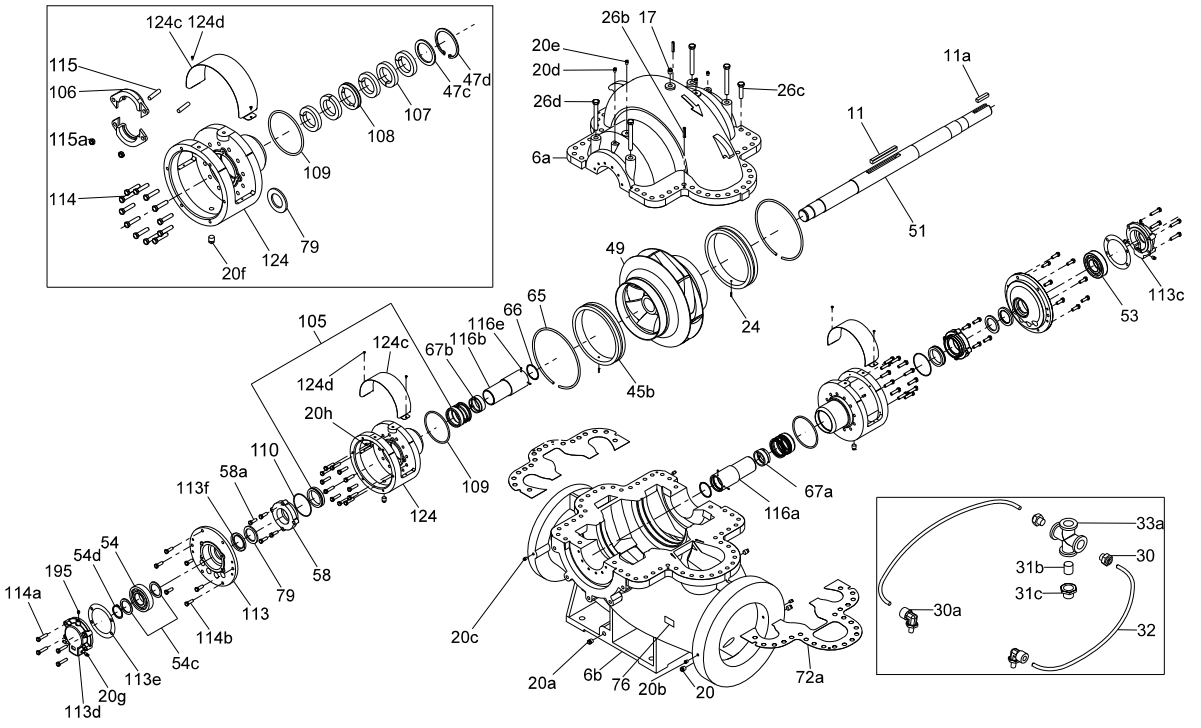

TM039946

HS 300-200-489, HS 350-300-508

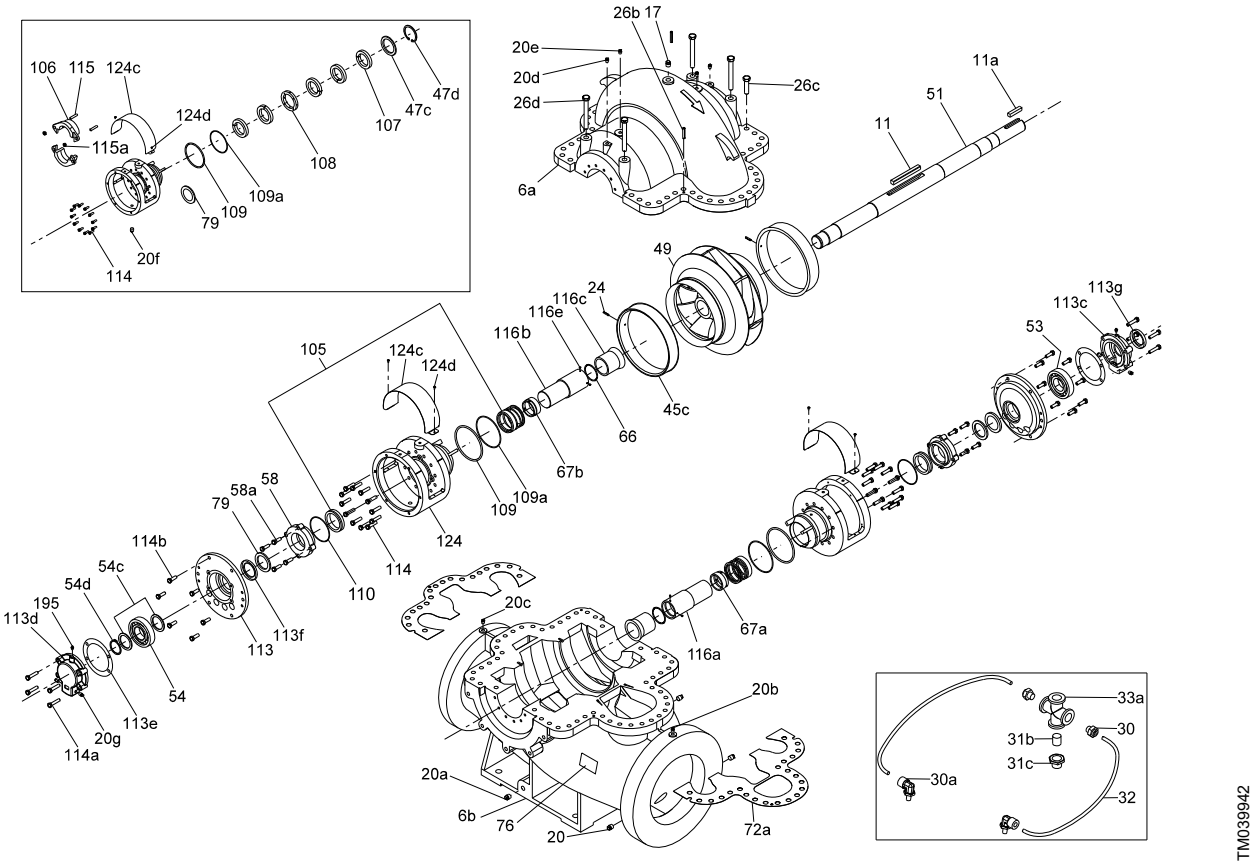

TM039942

HS, without sleeve

Example, pump with new type key:

HS	125	-100	-305X	/273.1	, (W)	1	F1	D	S	BBQE	1

Material code: D, E, J, L

50/60 Hz

Bearing

Pos.	Description	HS65 HS100-80-242	HS100-80-356 HS125	HS150 HS200-150-305	HS200-150-381 HS200-150-483 HS250 HS300-250-305	HS300-250-381
	Kit No	***99291587***	***99291986***	***99294128***	***99294133***	***99294136***
53	Bearing	1	1	1	1	1
54	Bearing	1	1	1	1	1
54e	Round nut	1	1	1	1	1
54c	Lock washer	1	1	1	1	1
54d	Tab washer	1	1	1	-	1
109	O-ring	-	2	2	2	2
109a	O-ring	-	-	-	-	-
109b	GASKET	2	-	-	-	-
110	O-ring					
113e	GASKET	2	2	2	2	2
113f	Lip seal	2	2	2	2	2
113g	Lip seal	1	1	1	1	1

Pos.	Description	HS200-150-483 X6	HS200-150-508	HS300-200-489 HS350-300-508	HS350-250-498 HS350-250-630	HS450-350-397
	Kit No	***99294137***	***99294138***	***99294139***	***99294154***	***99294140***
53	Bearing	1	1	1	1	1
54	Bearing	1	1	1	1	1
54e	Round nut	1	1	1	1	1
54c	Lock washer	1	1	1	1	1
54d	Tab washer	1	1	1	1	1
109	O-ring	2	2	2	2	2
109a	O-ring	2	-	2	-	-
109b	GASKET	-	2	-	2	2
110	O-ring			2	2	2
113e	GASKET	2	2	2	2	2
113f	Lip seal	2	2	2	2	2
113g	Lip seal	1	1	1	1	1

Gasket

Pos.	Description	HS65-50-242 HS65-50-331 HS100-80-242	HS100-80-356 HS125	HS150-125-305	HS150-125-381	HS200-150-305	HS200-150-381
	Kit No	***99344669***	***99344670***	***99344671***	***99344672***	***99344673***	***99344674***
72a	Gasket	1	1	1	1	1	1
79	Slinger	2	2	2	2	2	2
109	O-ring	-	2	2	2	2	2
109a	O-ring	-	-	-	-	-	-
109b	Gasket	2	-	-	-	-	-
110	O-ring	-	-	-	-	-	-
113e	Gasket	2	2	2	2	2	2
113f	Lip seal	2	2	2	2	2	2
113g	Lip seal	1	1	1	1	1	1

Pos.	Description	HS200-150-483	HS200-150-483 X6	HS200-150-508	HS250-200-305	HS250-200-381	HS300-200-489
	Kit No	***99344675***	***99344676***	***99344677***	***99344678***	***99344679***	***99344680***
72a	Gasket	1	1	1	1	1	1
79	Slinger	2	2	2	2	2	2
109	O-ring	2	2	2	2	2	2
109a	O-ring	-	2	-	-	-	2
109b	Gasket	-	-	2	-	-	-
110	O-ring	-	-	-	-	-	2
113e	Gasket	2	2	2	2	2	2
113f	Lip seal	2	2	2	2	2	2
113g	Lip seal	1	1	1	1	1	1

Pos.	Description	HS300-250-305	HS300-250-381	HS350-250-498	HS350-300-508	HS350-250-630	HS450-350-397
	Kit No	***99344681***	***99344682***	***99344683***	***99344684***	***99344685***	***99344686***
72a	Gasket	1	1	1	1	1	1
79	Slinger	2	2	2	2	2	2
109	O-ring	2	2	2	2	2	2
109a	O-ring	-	2	2	2	2	2
109b	Gasket	-	-	-	-	-	-
110	O-ring	-	-	2	2	2	2
113e	Gasket	2	2	2	2	2	2
113f	Lip seal	2	2	2	2	2	2
113g	Lip seal	1	1	1	1	1	1

Hardware

Pos.	Description	HS 65-50-242 HS 65-50-331 HS 100-80-242	HS 100-80-356	HS 125-100-280 HS 125-100-305	HS 125-100-381 HS 125-100-388	HS 150-125-305 HS 200-150-305C
	Kit No	***96827660***	***96827622***	***96827624***	***96827626***	***96827629***
26	Stud		28	28	28	
26b	Roll pin	2	2	2	2	2
26c	Cap screw	12	12	10	12	54
26d	Cap screw	8	4	4	4	4
36	Nut	-	28	28	28	-
114a	Cap screw	8	8	8	8	8

Pos.	Description	HS 150-125-381 HS 200-150-305A	HS 200-150-381 HS 250-200-305 HS 250-200-381 HS 300-250-305	HS 200-150-483	HS 200-150-508	HS 300-200-489 HS 350-300-508
	Kit No	***96827632***	***96827636***	***96827640***	***96827644***	***96827649***
26b	Roll pin	2	2	2	2	2
26c	Cap screw	50	56	60	26	60
26d	Cap screw	4	4	4	4	4
58a	Cap screw	-	-	8	4	8
114	Screw	-	-	-	-	24
114a	Cap screw	8	4	8	8	8
114b	Cap screw	-	4	16	12	12

Pos.	Description	HS 300-250-381	HS 350-250-498	HS 350-250-630	HS 450-350-397
	Kit No	***96827651***	***96840082***	***96840083***	***99345985***
26b	Roll pin	2	2	2	2
26c	Cap screw	34	36	32	44
26d	Cap screw	-	4	4	2
58a	Cap screw	8	8	8	2
114	Cap screw	24	28	28	32
114a	Cap screw	8	8	12	20

Impeller

The kit consists of impeller (pos. 49), key (pos. 11 and 11a), round nut (pos. 67b) and tap wash (pos. 67a).

Description	Kit No			
	Silicon bronze (B21)	**Nickel-aluminium-bronze (B22)**	**AISI-304 (H304)**	**AISI-316 (H316)**
HS65-50-242	*99292014*	*99344622*	*99292051*	*99344645*
HS65-50-331	*99292015*	*99344623*	*99292052*	*99344646*
HS100-80-242	*99292017*	*99344624*	*99292053*	*99344647*
HS100-80-356	*99292018*	*99344625*	*99292054*	*99344648*
HS125-100-280	*99292019*	*99344626*	*99292055*	*99344649*
HS125-100-305	*99292020*	*99344627*	*99292064*	*99344650*
HS125-100-381	-	-	*99292066*	*99344651*
HS125-100-388	*99292021*	*99344628*	-	-
HS150-125-305	*99292022*	*99344629*	*99292071*	*99344652*
HS150-125-381	*99292033*	*99344630*	*99292076*	*99344653*
HS200-150-305C	*99292034*	*99344631*	*99292080*	*99344654*
HS200-150-381	*99292035*	*99344632*	*99292082*	*99344655*
HS200-150-483	*99292037*	*99344633*	*99292095*	*99344656*
HS250-200-305	*99292042*	*99344636*	*99292102*	*99344659*
HS250-200-381	*99292043*	*99344637*	*99292104*	*99344660*
HS300-250-305	*99292046*	*99344639*	*99292107*	*99344662*
HS300-250-381	*99292047*	*99344640*	*99292109*	*99344664*
HS200-150-483 X6	*99292039*	*99344634*	*99292098*	*99344657*
HS200-150-508	*99292041*	*99344635*	*99292100*	*99344658*
HS300-200-489	*99292045*	*99344638*	*99292106*	*99344661*
HS350-300-508	*99292049*	*99344642*	*99292112*	*99344666*
HS350-250-498	*99292048*	*99344641*	*99292110*	*99344665*
HS350-250-630	*99295418*	*99344644*	*99295419*	*99344668*
HS450-350-397	*99292050*	*99344643*	*99292114*	*99344667*

Shaft seal (BBQE)

Pos.	Description	HS 65 HS 100-80-242	HS 100-80-356 HS 125	HS 150 HS 200-150-305	HS 200-150-381 HS 200-150-483 HS 250 HS 300-250-305	HS 300-250-381
	Kit No	***99294141***	***99294142***	***99294153***	***99294155***	***99294156***
105	Shaft seal	2	2	2	2	2
105b	Seal retainer	2	2	2	2	2
105a	Set screw	6	6	6	6	6
79	Slinger	2	2	2	2	2
109	O-ring	-	2	2	2	2
109a	O-ring	-	-	-	-	-
109b	GASKET	2	-	-	-	-
110	O-ring	-	-	-	-	-
113e	GASKET	2	2	2	2	2
54e	Round nut	1	1	1	1	1
54c	Lock washer	1	1	1	1	1
113f	Lip seal	2	2	2	2	2
113g	Lip seal	1	1	1	1	1

Pos.	Description	HS 200-150-483 X6	HS 200-150-508	HS 300-200-489 HS 350-300-508 HS 450-350-397	HS 350-250-498 HS 350-250-630
	Kit No	***99294157***	***99294158***	***99294159***	***99294160***
105	Shaft seal	2	2	2	2
105b	Seal retainer	2	2	2	2
105a	Set screw	6	6	6	6
79	Slinger	2	2	2	2
109	O-ring	2	2	2	2
109a	O-ring	2		2	2
109b	GASKET	-	2	-	-
110	O-ring	-	-	2	2
113e	GASKET	2	2	2	2
54e	Round nut	1	1	1	1
54c	Lock washer	1	1	1	1
113f	Lip seal	2	2	2	2
113g	Lip seal	1	1	1	1

Shaft seal (BBQV)

Pos.	Description	HS 65 HS 100-80-242	HS 100-80-356 HS 125	HS 150 HS 200-150-305	HS 200-150-381 HS 200-150-483 HS 250 HS 300-250-305	HS 300-250-381
	Kit No	***99294161***	***99294162***	***99294163***	***99294164***	***99294165***
105	Shaft seal	2	2	2	2	2
105b	Seal retainer	2	2	2	2	2
105a	Set screw	6	6	6	6	6
79	Slinger	2	2	2	2	2
109	O-ring	-	2	2	2	2
109a	O-ring	-	-	-	-	-
109b	GASKET	2	-	-	-	-
110	O-ring	-	-	-	-	-
113e	GASKET	2	2	2	2	2
54e	Round nut	1	1	1	1	1
54c	Lock washer	1	1	1	1	1
113f	Lip seal	2	2	2	2	2
113g	Lip seal	1	1	1	1	1

Pos.	Description	HS 200-150-483 X6	HS 200-150-508	HS 300-200-489 HS 350-300-508 HS 450-350-397	HS 350-250-498 HS 350-250-630
	Kit No	***99294166***	***99294168***	***99294171***	***99294173***
105	Shaft seal	2	2	2	2
105b	Seal retainer	2	2	2	2
105a	Set screw	6	6	6	6
79	Slinger	2	2	2	2
109	O-ring	2	2	2	2
109a	O-ring	2	-	2	2
109b	GASKET	-	2	-	-
110	O-ring	-	-	2	2
113e	GASKET	2	2	2	2
54e	Round nut	1	1	1	1
54c	Lock washer	1	1	1	1
113f	Lip seal	2	2	2	2
113g	Lip seal	1	1	1	1

Wear ring, bronze (B18)

Pos.	Description	HS 65-50-242 HS 65-50-331	HS 100-80-242	HS 100-80-356B	HS 100-80-356 HS 125-100-280 HS 125-100-381	HS 125-100-388
	Kit No	***96827589***	***96827617***	***97735851***	***96827614***	***97735910***
24	Roll pin	2	2	2	2	2
45b/c	Wear ring	2	2	2	2	2
65	Snap ring	2	2	-	2	-

Pos.	Description	HS 125-100-305	HS 150-125-305 HS 150-125-381	HS 200-150-305C
	Kit No	***96827612***	***96827610***	***96827607***
24	Roll pin	2	2	2
45b/c	Wear ring	2	2	2
65	Snap ring	2	-	-

Pos.	Description	HS 200-150-381	HS 200-150-483 HS 200-150-483 X6	HS 200-150-508	HS 250-200-305
	Kit No	***96827606***	***96840041***	***96827604***	***96827602***
24	Roll pin	2	2	2	2
45a/b/c	Wear ring	2	2	2	2
65	Snap ring	-	2	-	-

Pos.	Description	HS 300-200-489	HS 350-250-498	HS 350-250-630	HS 350-300-508
	Kit No	***96827600***	***96840072***	***96840073***	***96840074***
24	Roll pin	2	2	-	-
45a/b/c	Wear ring	2	2	2	2
65	Snap ring	-	-	2	2

Pos.	Description	HS 450-350-397	HS 250-200-381	HS 300-250-305E	HS 300-250-305A	HS 300-250-381
	Kit No	***96840075***	***96827601***	***96827598***	***97932523***	***96827596***
24	Roll pin	-	2	2	2	2
45a/b/c	Wear ring	2	2	2	2	2
65	Snap ring	-	-	-	-	-

Wear ring, stainless steel (N5)

Pos.	Description	HS 65-50-242 HS 65-50-331	HS 100-80-242	HS 100-80-356B	HS 100-80-356 HS 125-100-280 HS 125-100-381	HS 125-100-388
	Kit No	*96927584*	*96927585*	*97933098*	*96927586*	*97735921*
24	Roll pin	2	2	2	2	2
45b/c	Wear ring	2	2	2	2	2
65	Snap ring	2	2	-	2	-

Pos.	Description	HS 125-100-305	HS 150-125-305 HS 150-125-381	HS 200-150-305C
	Kit No	*96927587*	*96927588*	*96927590*
24	Roll pin	2	2	2
45b/c	Wear ring	2	2	2
65	Snap ring	2	-	-

Pos.	Description	HS 200-150-381	HS 200-150-483 HS 200-150-483 X6	HS 200-150-508	HS 250-200-305
	Kit No	*96927591*	*96927602*	*96927603*	*96927604*
24	Roll pin	2	2	2	2
45a/b/c	Wear ring	2	2	2	2
65	Snap ring	-	2	-	-

Pos.	Description	HS 300-200-489	HS 350-250-498	HS 350-250-630	HS 350-300-508
	Kit No	*96927606*	*96927609*	*96927610*	*96927611*
24	Roll pin	2	2	-	-
45a/b/c	Wear ring	2	2	2	2
65	Snap ring	-	-	2	2

Pos.	Description	HS 450-350-397	HS 250-200-381	HS 300-250-305E	HS 300-250-305A	HS 300-250-381
	Kit No	*96927612*	*96927605*	*96927607*	*97948031*	*96927608*
24	Roll pin	-	2	2	2	2
45a/b/c	Wear ring	2	2	2	2	2
65	Snap ring	-	-	-	-	-

HS 65-50-242, HS 65-50-331, HS 100-80-242

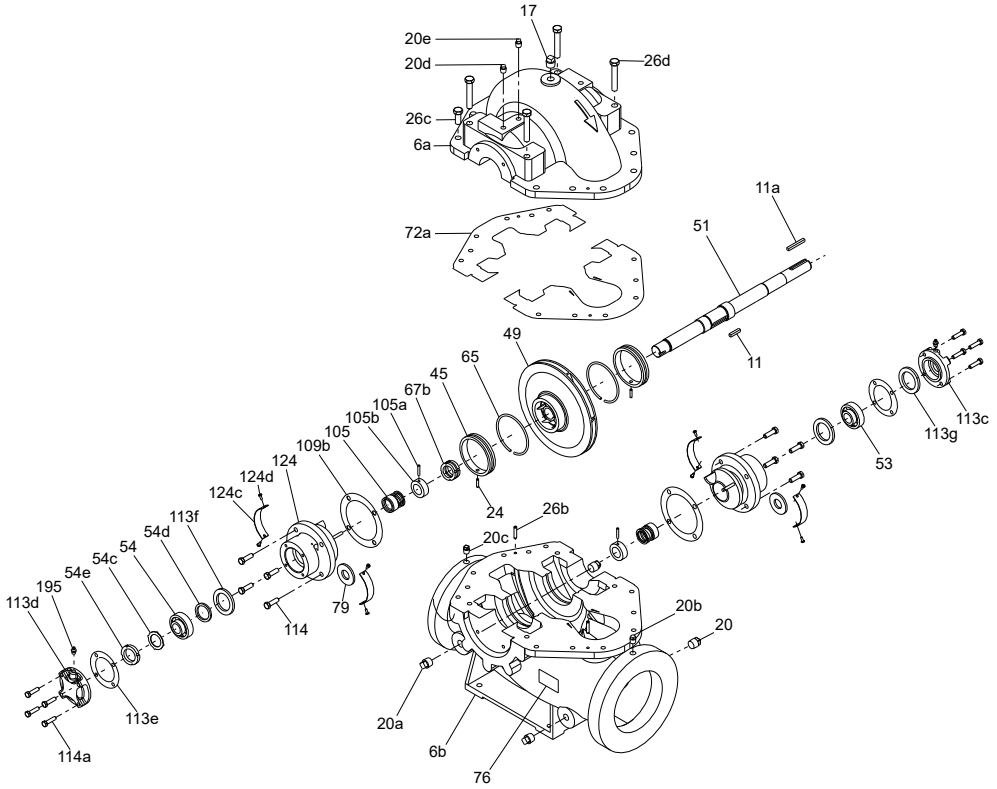

HS 100-80-356

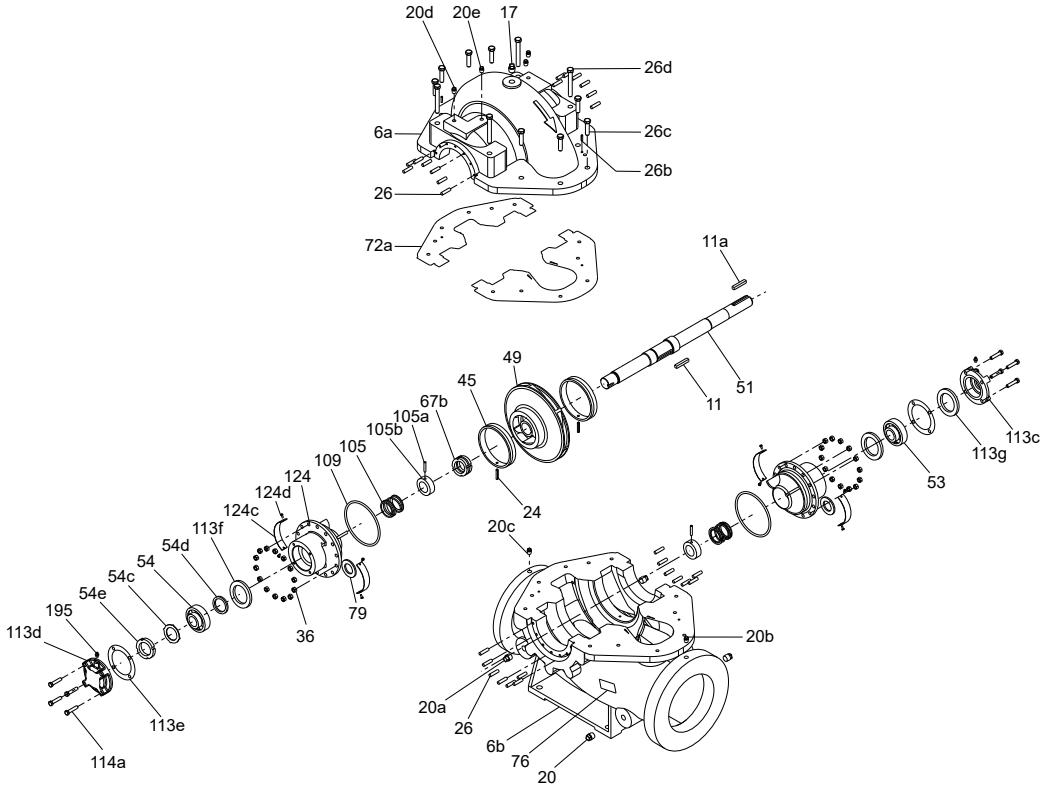

HS 125-100-280, HS 125-100-305

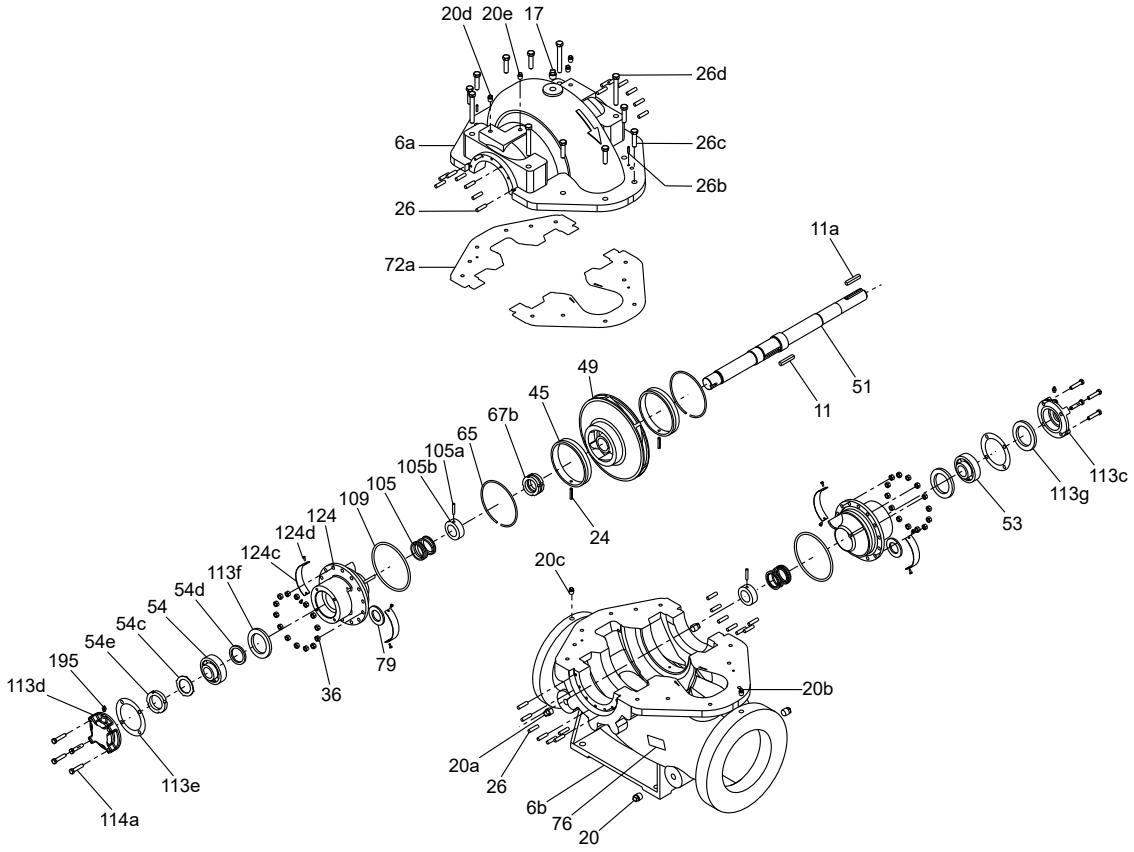

HS 125-100-381

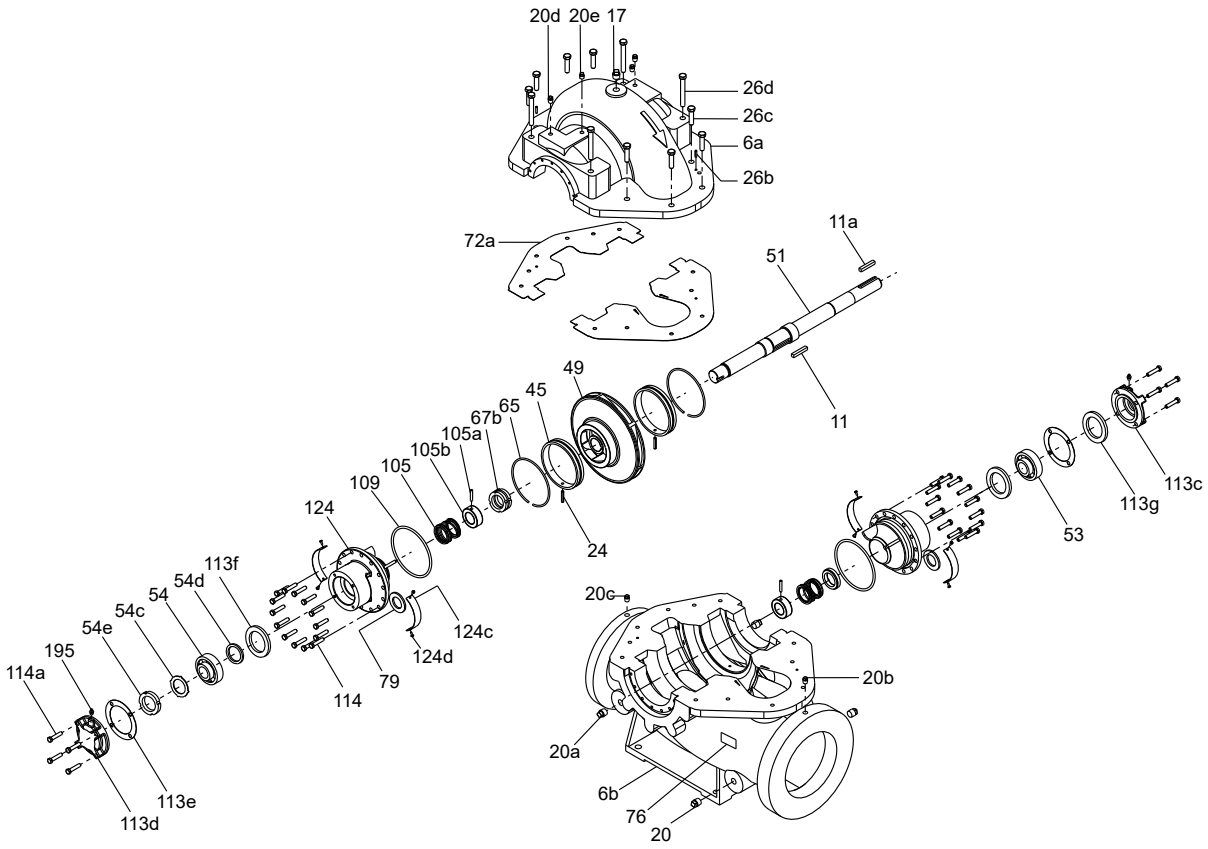

HS 150-125-305, HS 150-125-381, HS 200-150-305

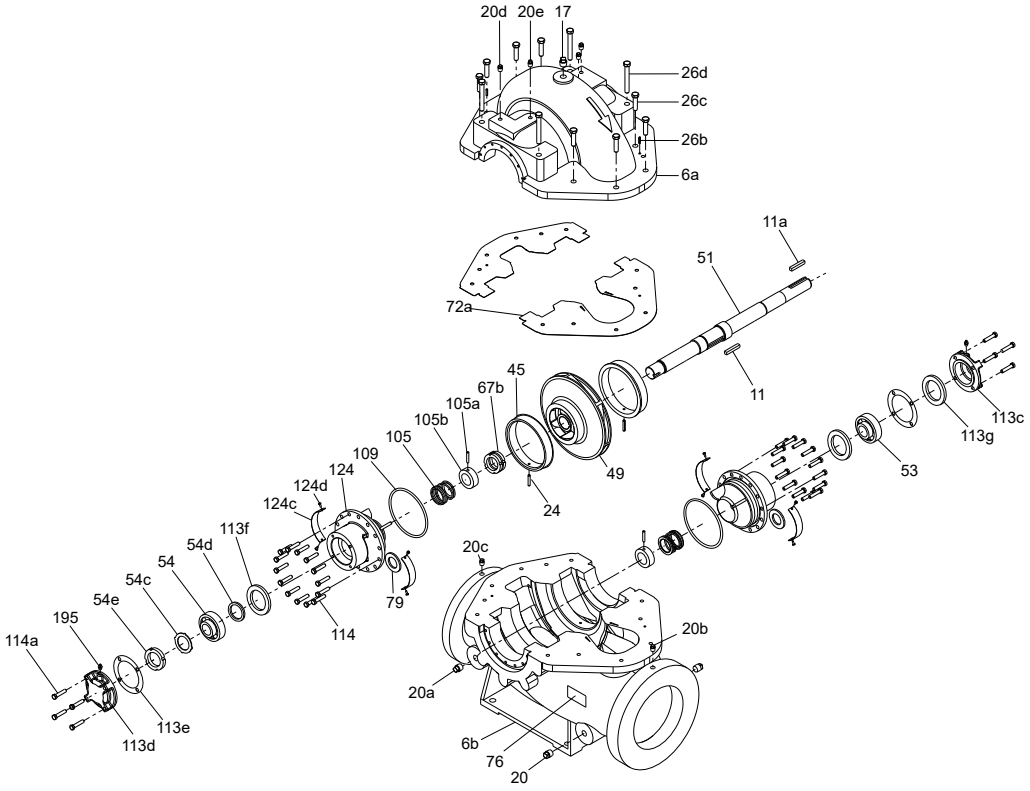

HS 200-150-483

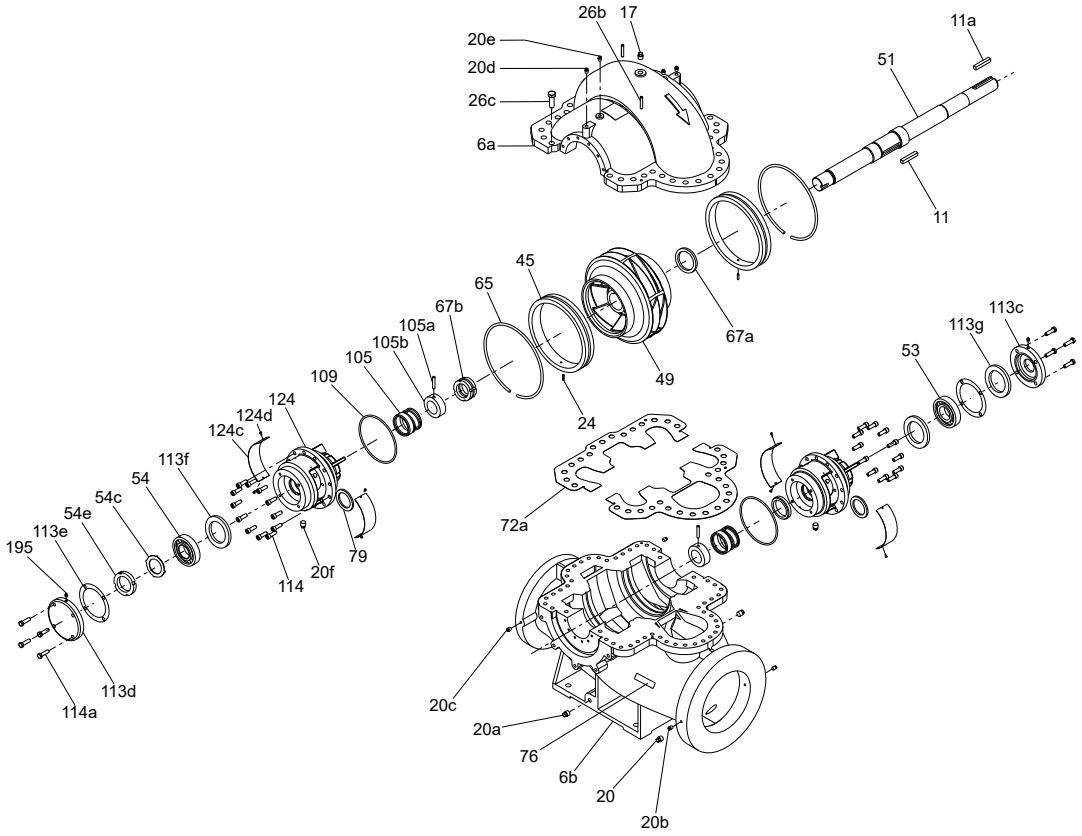

HS 200-150-381, HS 250-200-305, HS 250-200-381, HS 300-250-305

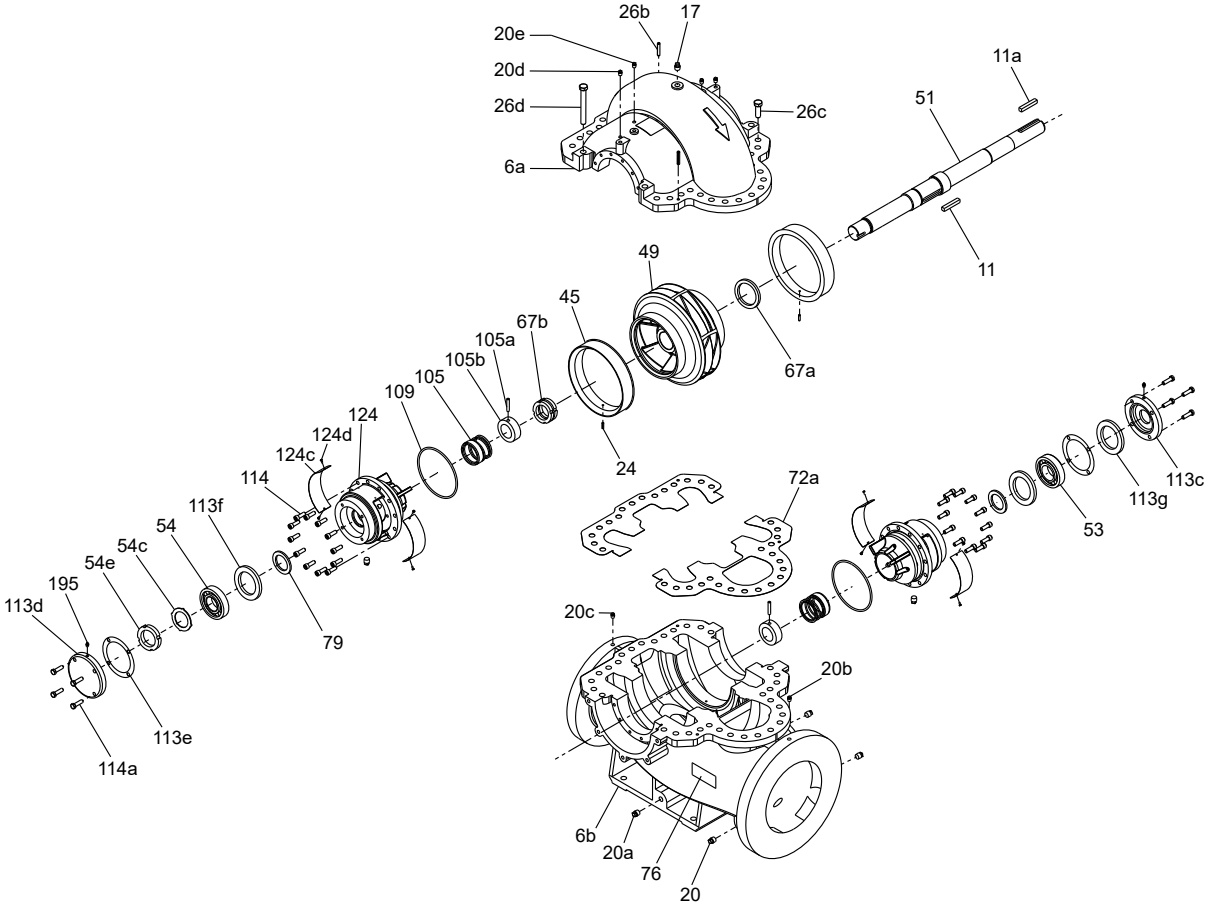

HS 300-250-381

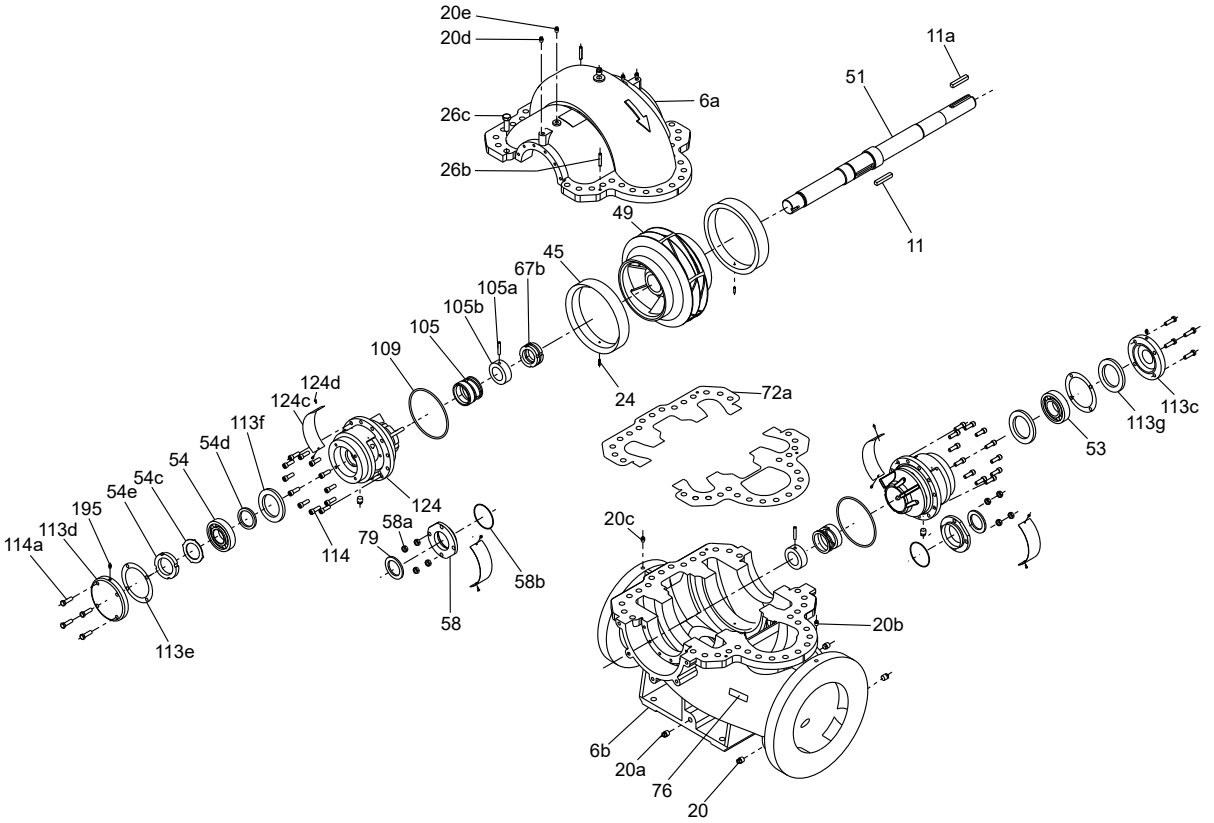

HS 350-250-498

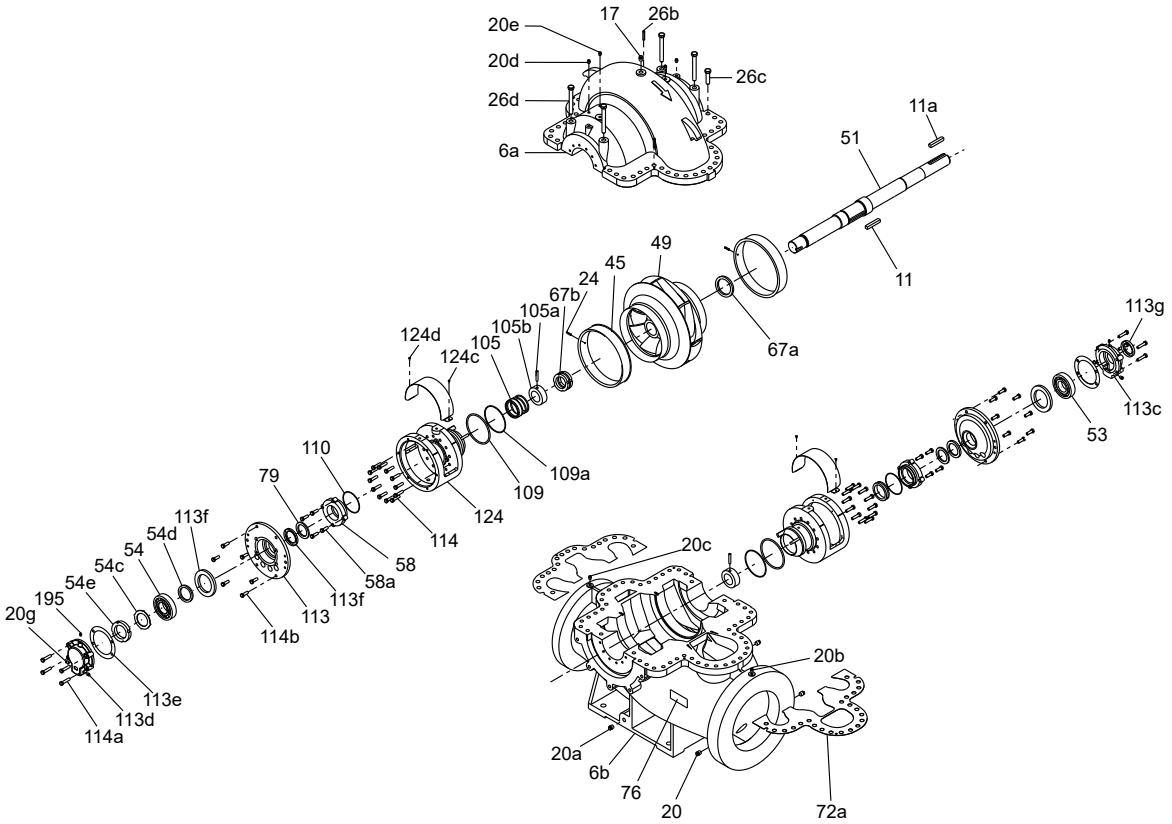

TM069414

HS 450-350-397

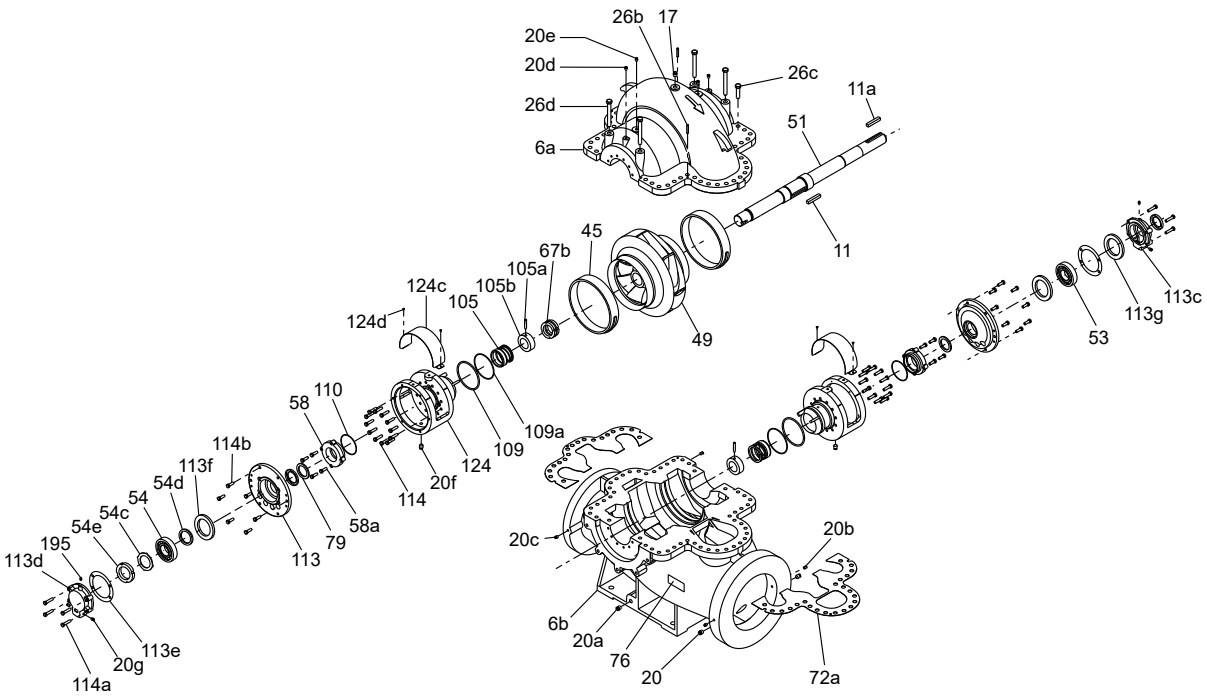

TM069416

HS 200-150-483 X6

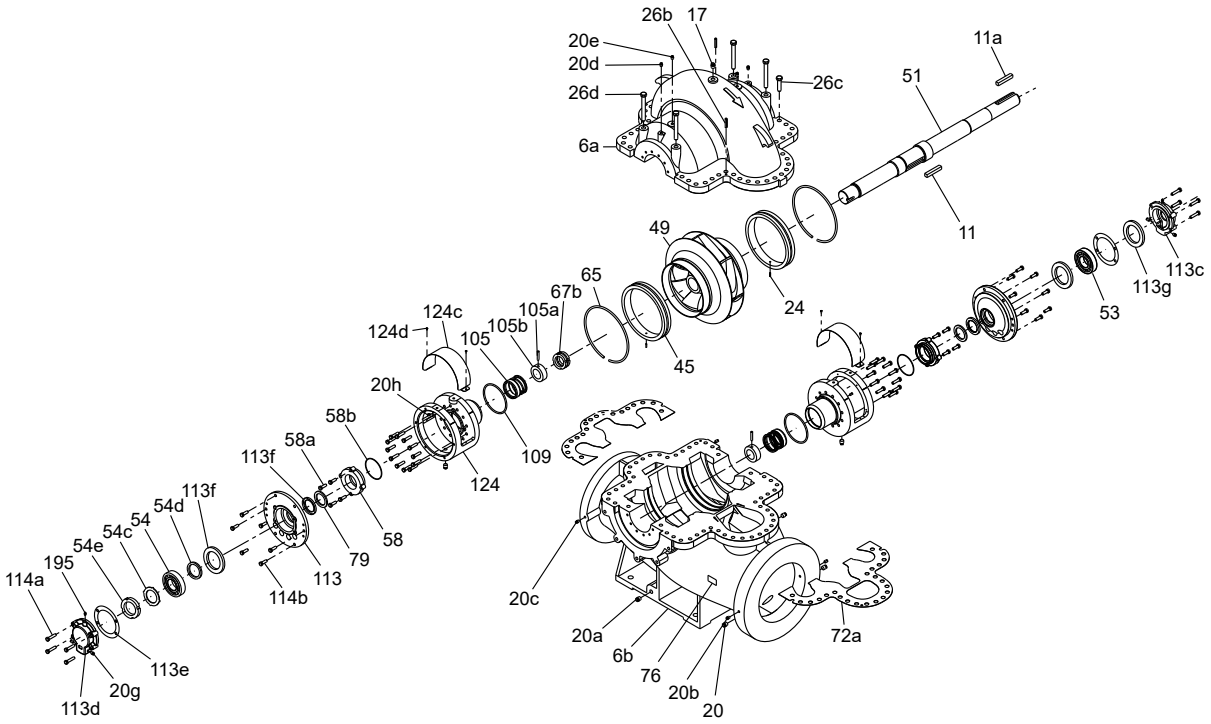

HS 200-150-508

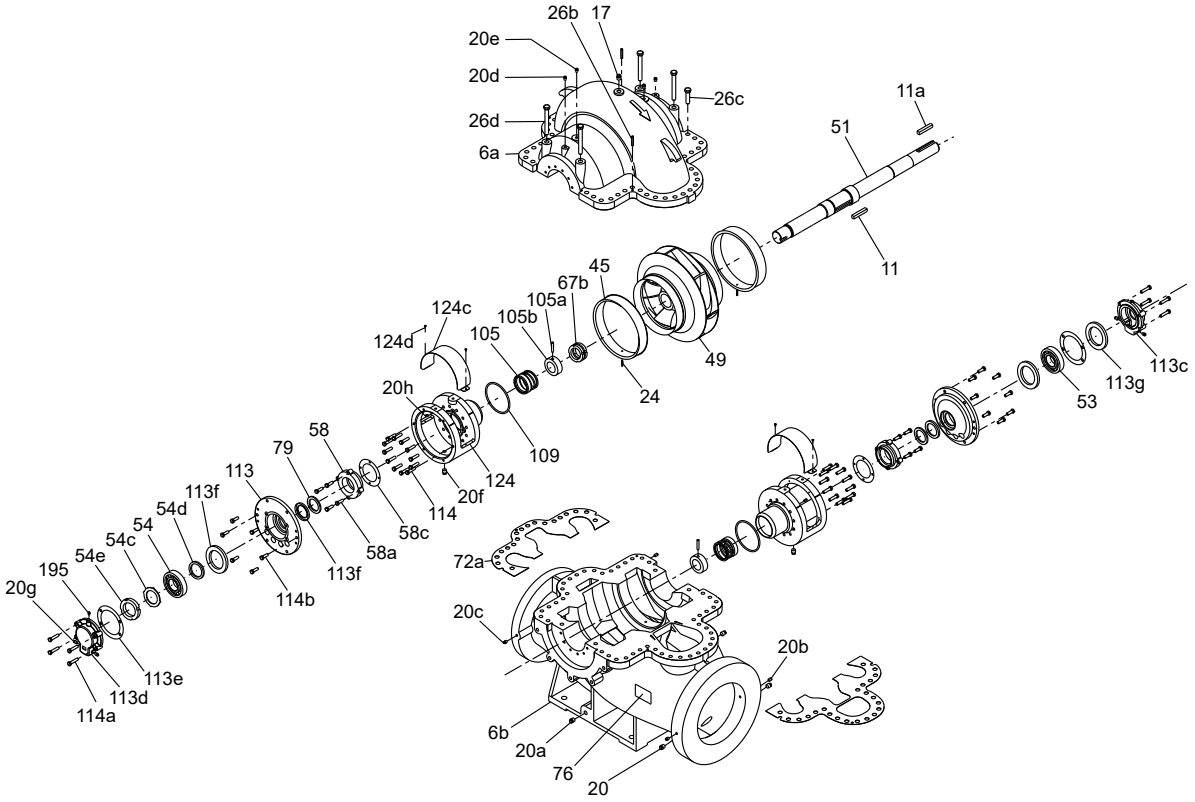

HS 350-250-630

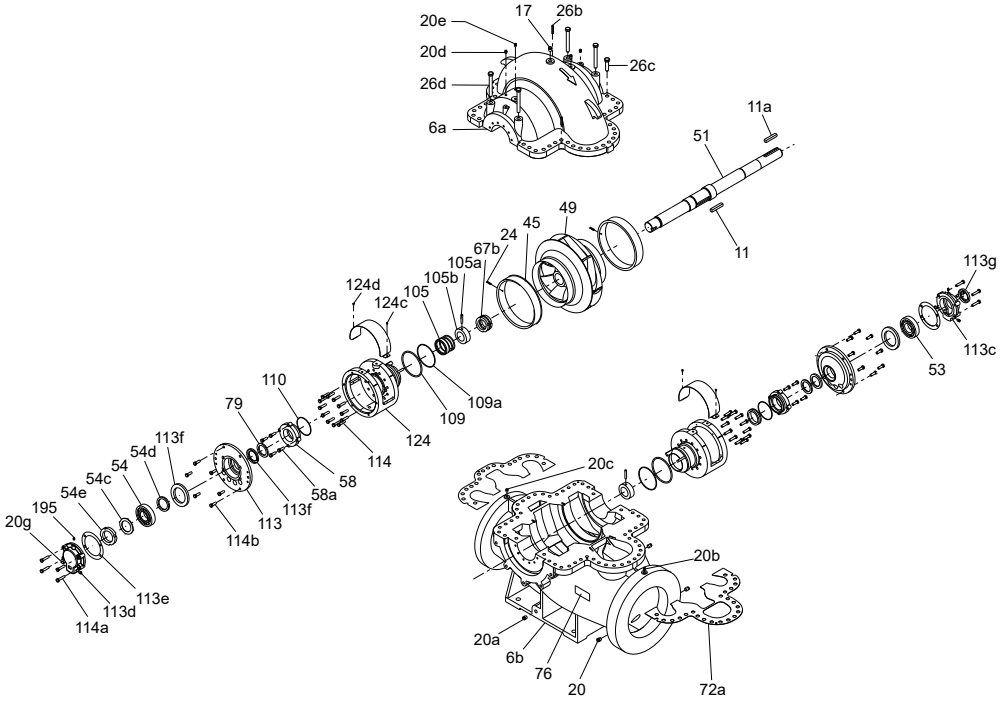

TM069415

HS 300-200-489, HS 350-300-508

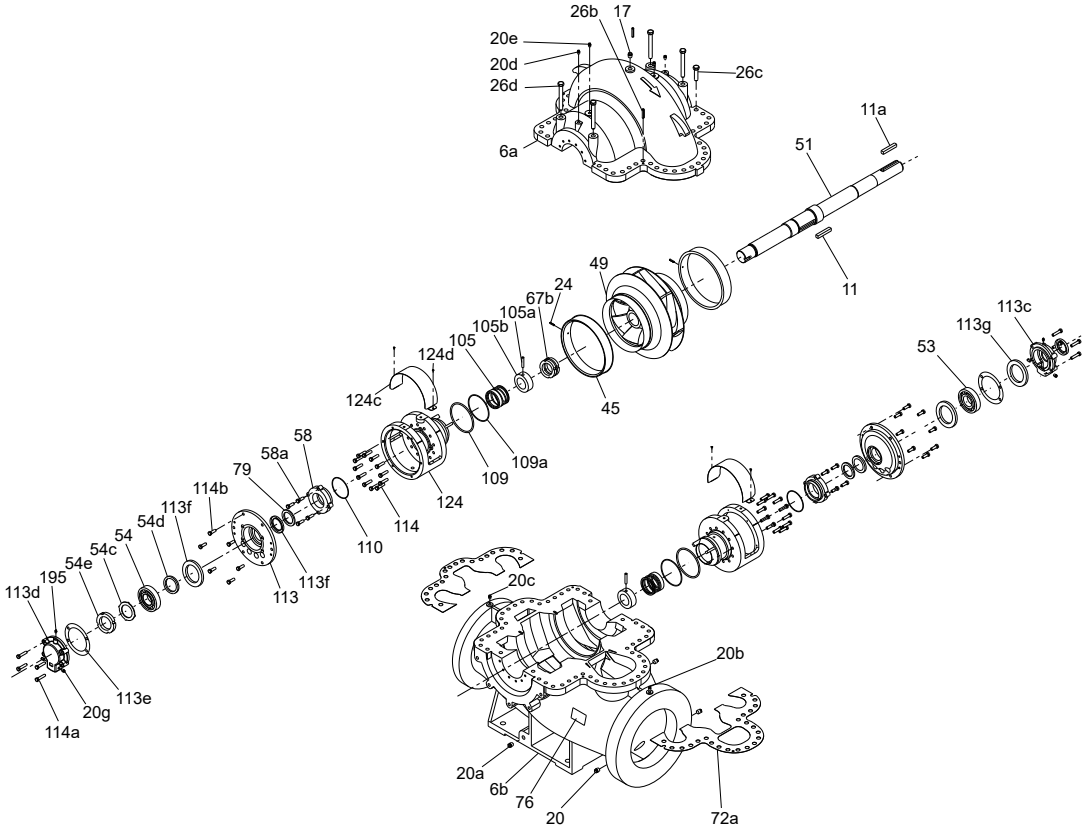

TM069413

30. HSX

50/60 Hz

Bearing

Pos.	Description	HSX125 HSX150 HSX200-150-305	HSX200-150-381 HSX200-150-483 HSX250 HSX300-250-305	HSX300-250-381	HSX300-200-489
	Kit No	***96827577***	***96827578***	***96827581***	***96840088***
53	Bearing	1	1	1	1
54	Bearing	1	1	1	1
54c	Washer	-	1	-	2
54d	Snap ring	-	1	1	1
109b	Gasket	-	2	-	-
113e	Gasket	2	-	2	2
113f	Lip seal	-	-	-	2
113g	Lip seal	-	-	-	1

Hardware

Pos.	Description	HSX125-100-280 HSX125-100-305	HSX125-100-381	HSX150-125-305 HSX200-150-305C	HSX150-125-381 HSX200-150-305A
	Kit No	***96827624***	***96827626***	***96827629***	***96827632***
26	Stud	28	28	-	-
26b	Roll pin	2	2	2	2
26c	Cap screw	10	12	54	50
26d	Cap screw	4	4	4	4
36	Nut	28	28	-	-
114a	Cap screw	8	8	8	8

Pos.	Description	HSX200-150-381 HSX250-200-305 HSX250-200-381 HSX300-250-305	HSX200-150-483	HSX300-200-489	HSX300-250-381
	Kit No	***96827636***	***96827640***	***96827649***	***96827651***
26b	Roll pin	2	2	2	2
26c	Cap screw	56	60	60	34
26d	Cap screw	4	4	4	-
58a	Cap screw	-	8	8	8
114	Screw	-	-	24	24
114a	Cap screw	4	8	8	8
114b	Cap screw	4	16	12	-

Impeller

The impeller kit consists of impeller (pos. 49) and key (pos. 11 and 11a).

Description	Kit No
	Silicon bronze
HSX125-100-280	*96827668*
HSX125-100-305	*96827670*
HSX125-100-381	*96827669*
HSX150-125-305	*96827667*
HSX150-125-381	*96827665*
HSX200-150-305A	*96827664*
HSX200-150-305C	*96827661*
HSX200-150-381	*96827659*
HSX200-150-483	*96840089*
HSX250-200-305	*96827653*
HSX250-200-381	*96827652*
HSX300-200-489	*96827650*
HSX300-250-305	*96827648*
HSX300-250-381	*96827646*

Seal kit

Pos.	Description	HSX125-100-280 HSX125-100-305 HSX125-100-381	HSX150-125-305	HSX150-125-381	HSX200-150-305A HSX200-150-305C
	Kit No	*96827587*	*96827593*	*96827586*	*96827595*
72a	Case gasket	2	2	2	2
79	Slinger	2	2	2	2
109b	Gasket	2	2	2	2
113e	Gasket	1	1	1	1

Pos.	Description	HSX200-150-483	HSX200-150-381	HSX250-200-305	HSX250-200-381
	Kit No	*96840076*	*96827588*	*96827603*	*96827609*
72a	Gasket case	1	1	1	1
79	Slinger	2	2	2	2
109	O-ring	2	2	2	2
109b	Gasket	-	2	2	2
110	O-ring	2	-	-	-

Pos.	Description	HSX300-250-305	HSX300-250-381	HSX300-200-489
	Kit No	*96827613*	*96827590*	*96827611*
66	O-ring	2	-	1
72a	Gasket case	1	1	2
79	Slinger	2	-	2
109	O-ring	-	2	2
109b	Gasket	2	-	2
110	O-ring	-	2	-
113e	Gasket	-	2	2

Shaft sleeve (bronze)

Pos.	Description	HSX125 HSX200-150-305A	HSX150 HSX200-150-305C	HSX200-150-381 HSX250-200-305/381 HSX300-250-305
	Kit No	***96827638***	***96827637***	***96827635***
66	O-ring	2	2	2
67a	Impeller nut	-	-	1
67b	Impeller nut	-	-	1
116	Sleeve	-	-	2
116a		1	1	-
116b		1	1	-
116e	Screw	-	-	4

Pos.	Description	HSX200-150-483	HSX300-200-489	HSX300-250-381
	Kit No	***96843909***	***96827628***	***96827627***
66	O-ring	2	2	2
67a	Impeller nut	1	1	1
67b	Impeller nut	1	1	1
116	Sleeve	2	-	2
116c		-	2	-
116d		-	1	-
116e	Screw	4	4	4

Shaft seal (BBVP, PN16)

Pos.	Description	HSX125	HSX150-125-305	HSX150-125-381	HSX200-150-305
	Kit No	***96840110***	***96840111***	***96840112***	***96840113***
53	Bearing	1	1	1	1
54	Bearing	1	1	1	1
66	O-ring	2	-	-	2
72a	Case gasket	1	1	1	1
79	Slinger	2	2	2	2
105	Shaft seal	2	2	2	2
109	O-ring	-	2	2	2
109a	O-ring	-	-	2	-
109b	Gasket	-	2	-	-
113e	Gasket	2	2	-	2

Pos.	Description	HSX200-150-381/483	HSX250-200-305	HSX250-200-381	HSX300-200-489
	Kit No	***96840114***	***96840116***	***96840117***	***96840118***
53	Bearing	1	1	1	1
54	Bearing	1	1	1	1
72a	Case gasket	1	1	1	1
79	Slinger	2	2	2	2
105	Shaft seal	2	2	2	2
109	O-ring	2	2	2	2
109a	O-ring	-	-	-	2
109b	Gasket	2	2	2	-
110	O-ring	-	-	-	2
113e	Gasket	-	-	-	2
113f	Lip seal	-	-	-	2
113g	Lip seal	-	-	-	1

Pos.	Description	HSX300-250-305	HSX300-250-381
	Kit No	*96840119*	*96840120*
53	Bearing	1	1
54	Bearing	1	1
72a	Case gasket	1	1
79	Slinger	2	2
105	Shaft seal	2	2
109	O-ring	2	2
109a	O-ring	2	-
109b	Gasket	-	2
110	O-ring	-	2

Wear ring

Pos.	Description	HSX125-100-280 HSX125-100-381	HSX125-100-305	HSX150-125-305 HSX150-125-381	HSX200-150-305A
		Bronze	Bronze	Bronze	Bronze
	Kit No	*96827614*	*96827612*	*96827610*	*96827608*
24	Roll pin	2	2	2	2
45b/c	Wear ring	2	2	2	2
65	Snap ring	2	2	-	2

Pos.	Description	HSX200-150-305C	HSX200-150-381	HSX200-150-483	HSX250-200-305
		Bronze	Bronze	Bronze	Bronze
	Kit No	*96827607*	*96827606*	*96840041*	*96827602*
24	Roll pin	2	2	2	2
45b/c	Wear ring	2	2	2	2
65	Snap ring	-	-	2	-

Pos.	Description	HSX250-200-381	HSX300-200-489	HSX300-250-305	HSX300-250-381
		Bronze	Bronze	Bronze	Bronze
	Kit No	*96827601*	*96827600*	*96827598*	*96827596*
24	Roll pin	2	2	2	2
45/b/c	Wear ring	2	2	2	2

HSX125-100-381

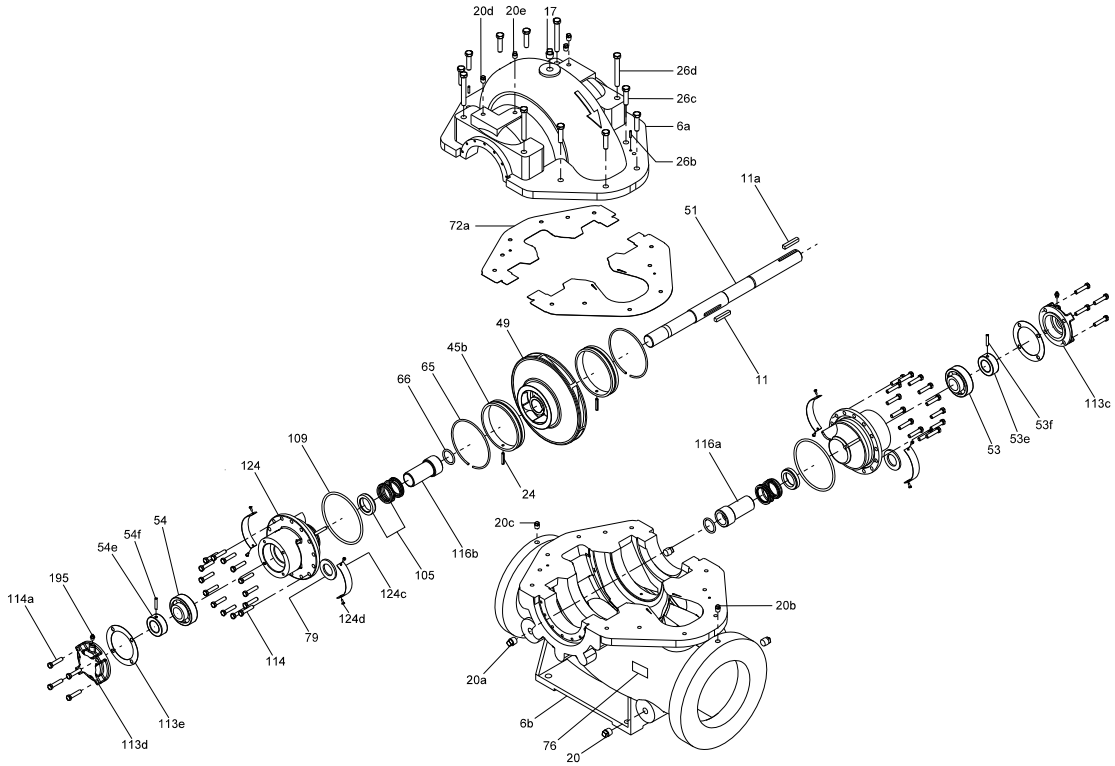

TM039948

HSX150-125-305, HSX150-125-381, HSX200-150-305C

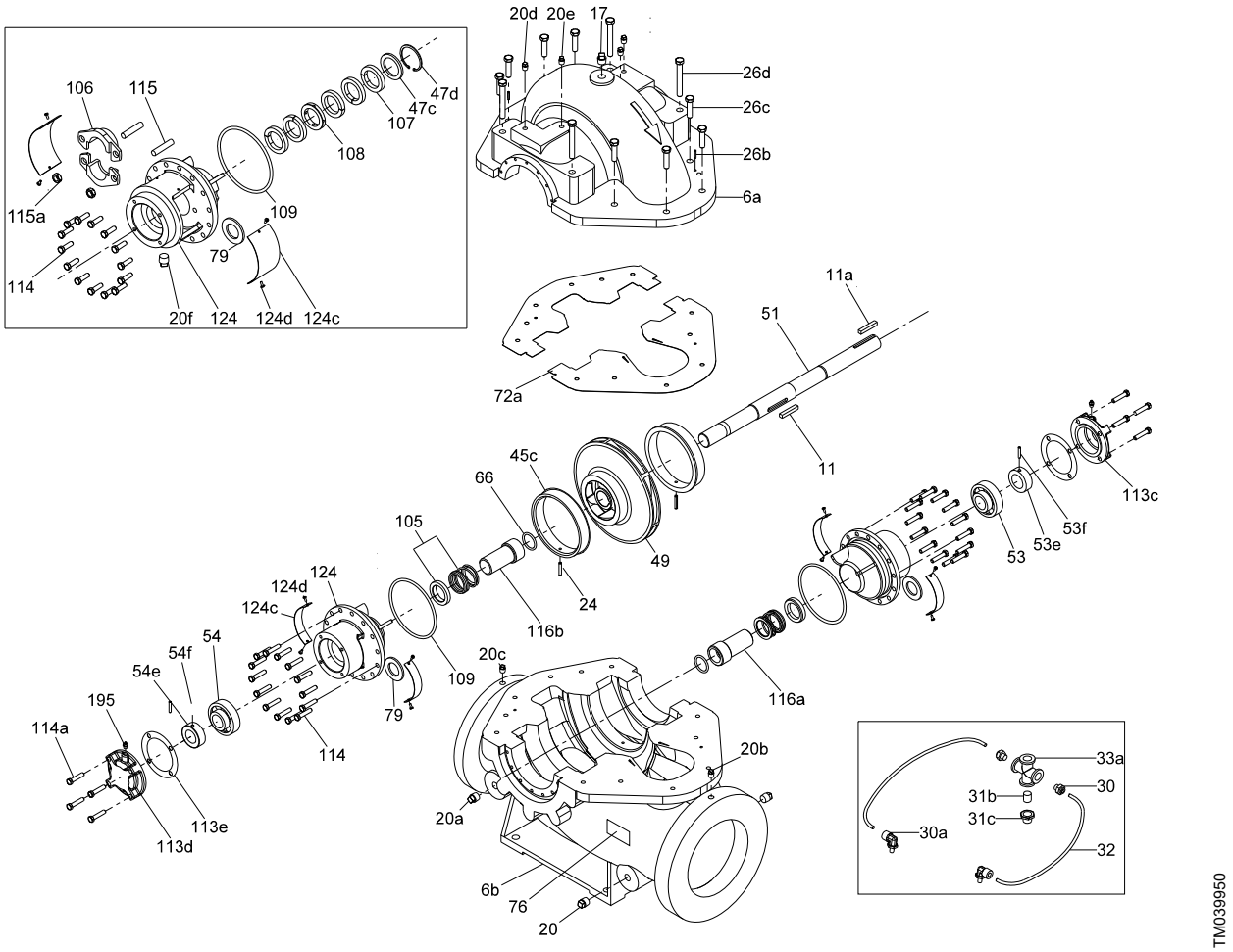

HSX125-100-280, HSX125-100-305, HSX200-150-305A

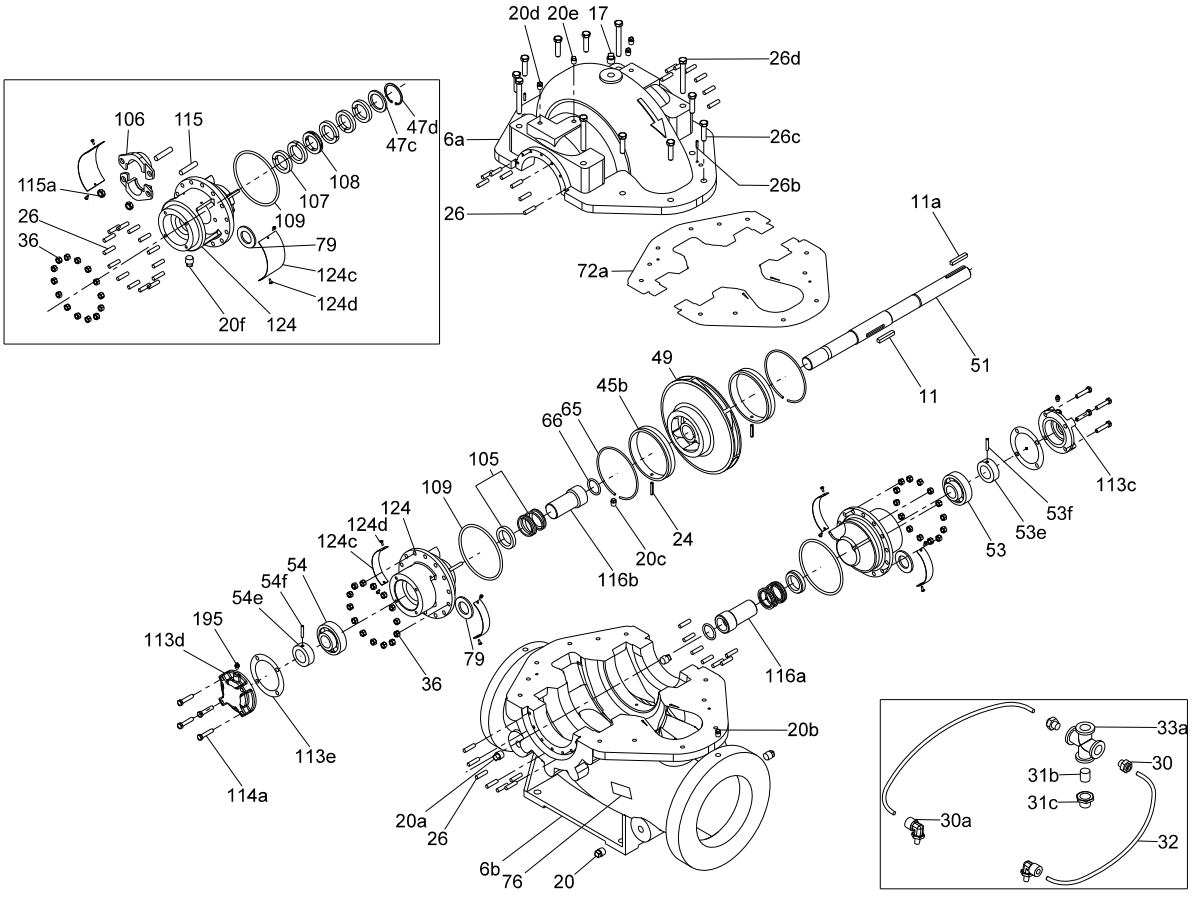

HSX200-150-381, HSX250-200-305, HSX250-200-381, HSX300-250-305

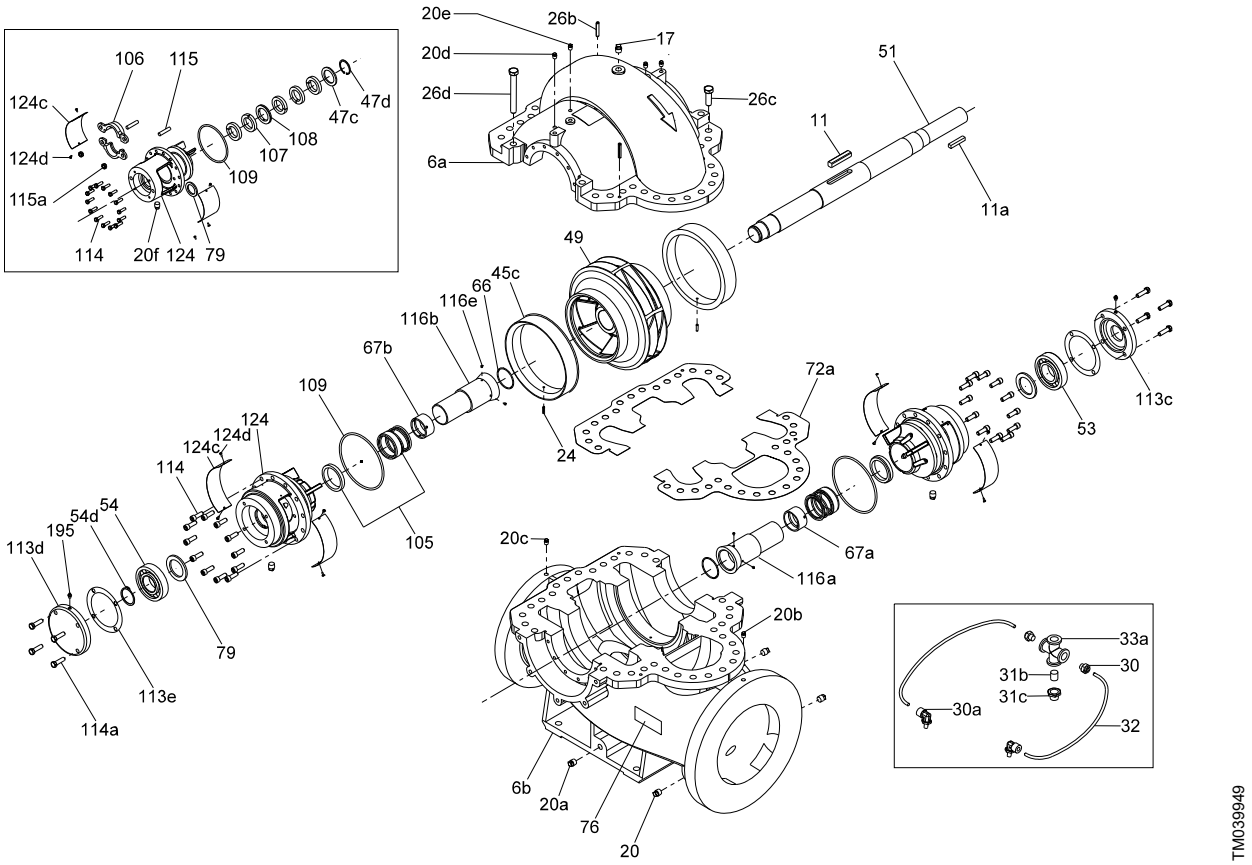

HSX300-250-381

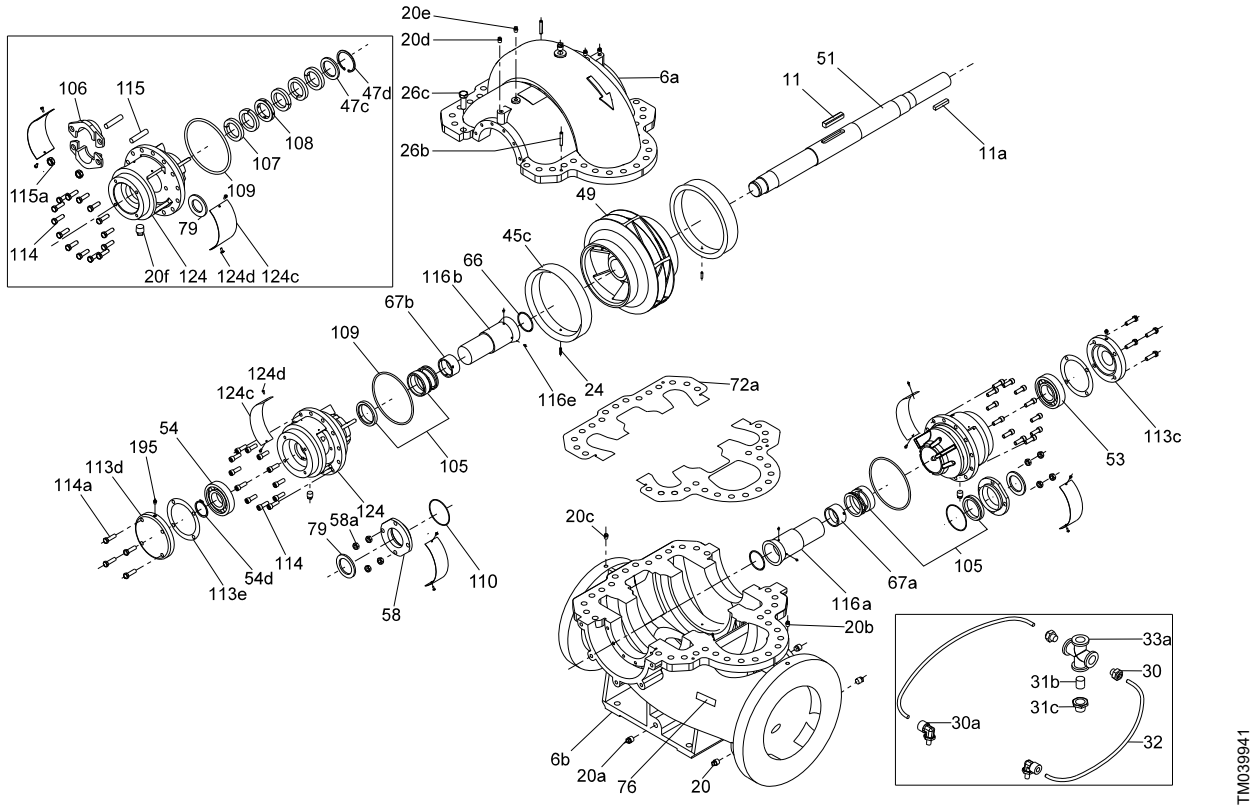

HSX200-150-483

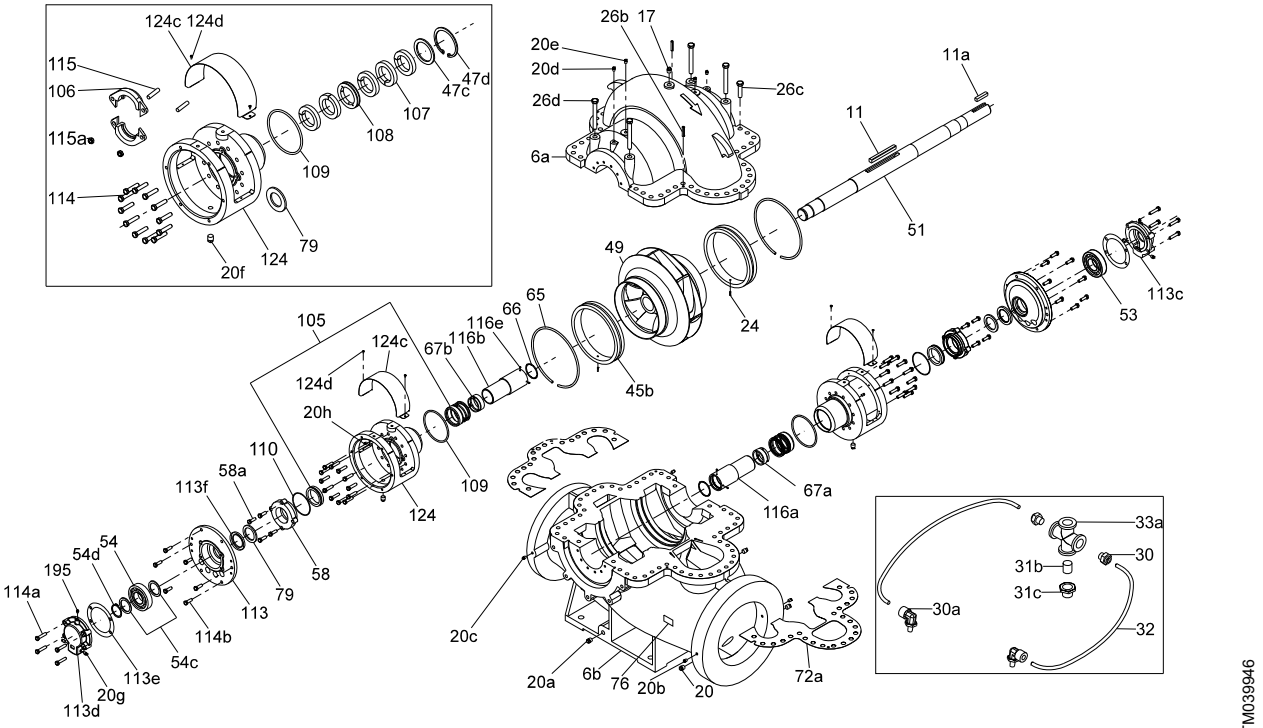

HSX300-200-489

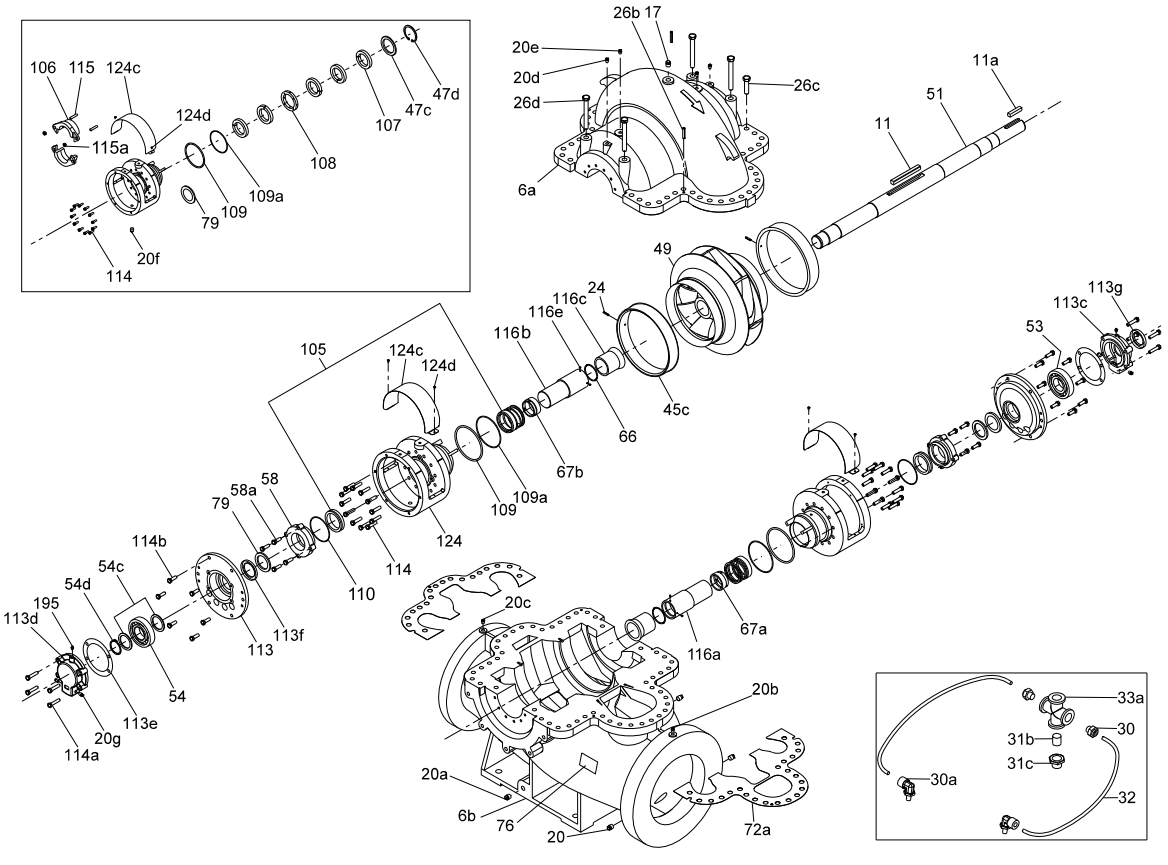

31. Hydro Multi-B

50/60 Hz

Controller, CU 323

Pos.	Description	2 pumps	3 pumps	4 pumps
	Kit No	*97896795*	*97896796*	*97896797*
-	Controller	1	1	1

Non-return valve

Pos.	Description	DN 32	DN 40	DN 50	DN 65
	Kit No	*96637443*	*96637444*	*96637445*	*96637446*
405	Non-return valve	1	1	1	1

O-ring and gasket

Pos.	Description		CM1/3	CM5	CM10	CM15	CM25
	Kit No	Type	*97896843*	*97896844*	*97896845*	*97896846*	*97896847*
414	O-ring for pump (inlet/outlet)	EPDM	1	1	1	1	1
415	Gasket for PJE coupling	EPDM	1	1	1	1	1
416	Gasket for manifold	EPDM	-	-	1	1	1

Plug for controller

Pos.	Description	
	Kit No	*97896848*
-	Plug with assembly set for CU 323	1

Pressure switch

Pos.	Description	1 bar	6 bar
	Kit No	*97896853*	*97896854*
407	Pressure switch, 1-phase 2-pole	1	1

Pressure gauge

Pos.	Description	10 bar	16 bar
	Kit No	*97896856*	*97896855*
462	Pressure gauge	1	1

Sensor

Pos.	Description	1 bar	6 bar	10 bar	16 bar
	Kit No	*96637449*	*97896849*	*96637452*	*96637453*
461	Pressure sensor 4-20 mA	1	1	1	1

Hydro Multi-B

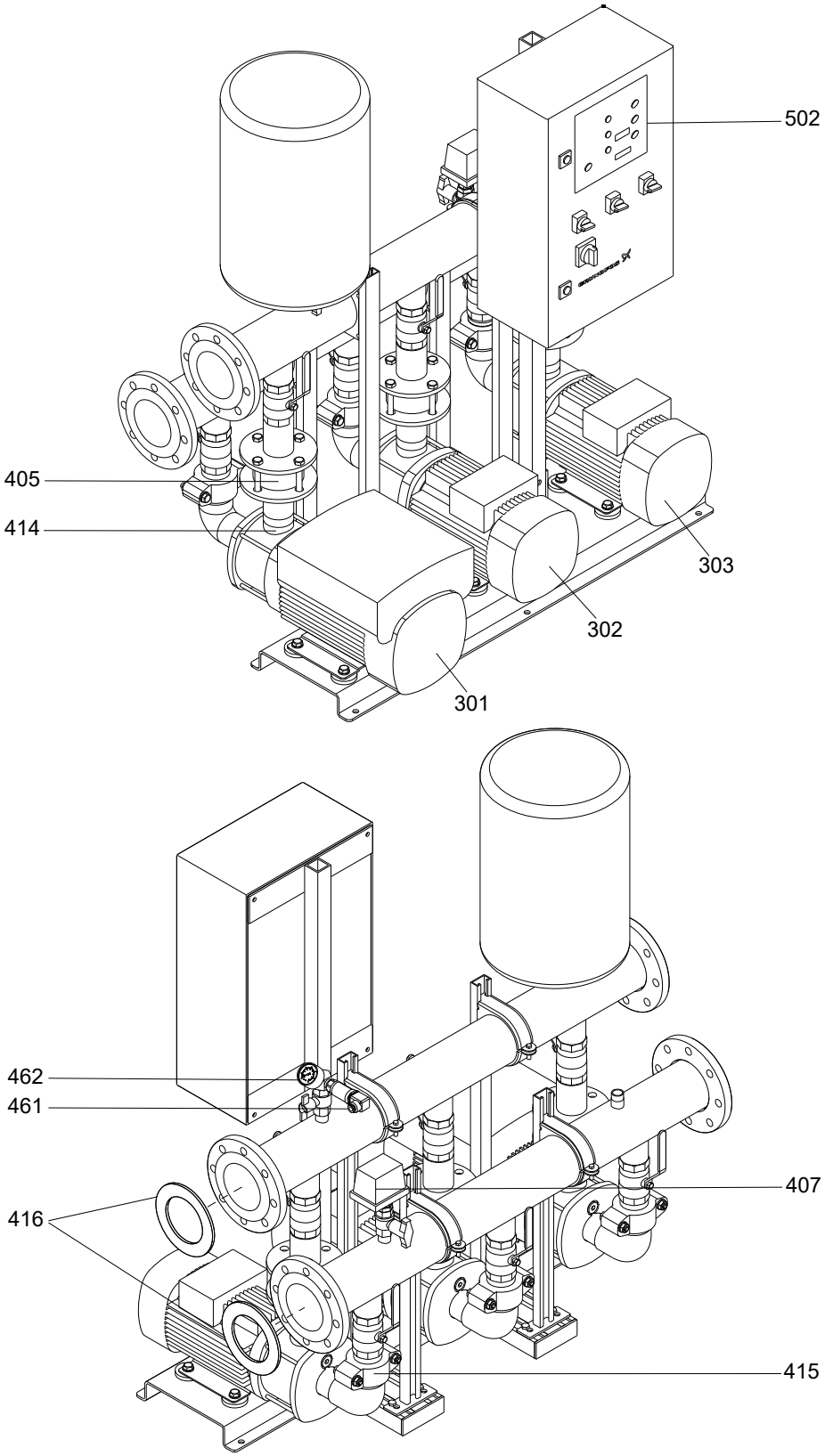

32. Hydro Multi-E

50/60 Hz

Controller card

Not applicable for Hydro Multi-E systems fitted with permanent-magnet MGE motors.

Pos.	Description	1ph	3ph
	Kit No	*97959292*	*96086148*
-	PC board	1	1

GENIbus card, external

Pos.	Description / Kit No	*96020339*
-	PC board	1

GENIbus card, internal

Not applicable for Hydro Multi-E systems fitted with permanent-magnet MGE motors.

Pos.	Description / Kit No	*96086146*
-	PC board	1

Level switch

Pos.	Description / Kit No	*010184*
1	Level switch, 5 m cable	1

Non-return valve

Pos.	Description	DN 32	DN 40	DN 50
	Kit No	*96637443*	*96637444*	*96637445*
405	Non-return valve	1	1	1

O-ring and gasket

Pos.	Description		CM1/3	CM5	CM10	CM15
	Kit No	Type	*97896843*	*97896844*	*97896845*	*97896846*
414	O-ring for pump (inlet/outlet)	EPDM	1	1	1	1
415	Gasket for PJE coupling	EPDM	1	1	1	1
416	Gasket for manifold	EPDM	-	-	1	1

Sensor

Pos.	Description	1 bar	6 bar	10 bar	16 bar
	Kit No	*96637449*	*96637451*	*96637452*	*96637453*
461	Pressure sensor 4-20 mA	1	1	1	1

Pressure gauge

Pos.	Description	10 bar	16 bar
	Kit No	*97896856*	*97896855*
462	Pressure gauge	1	1

Pressure switch

Pos.	Description	1 bar
	Kit No	*97896853*
407	Pressure switch, 1-phase 2-pole	1

Hydro Multi-E with CR(I)E pumps

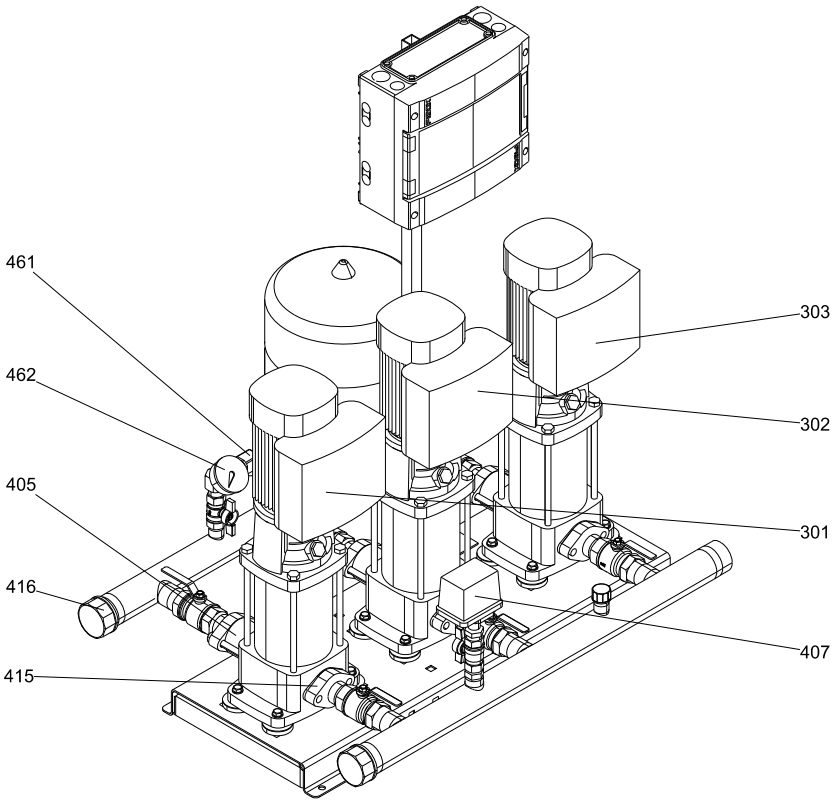

TM052353

Hydro Multi-E with CME pumps

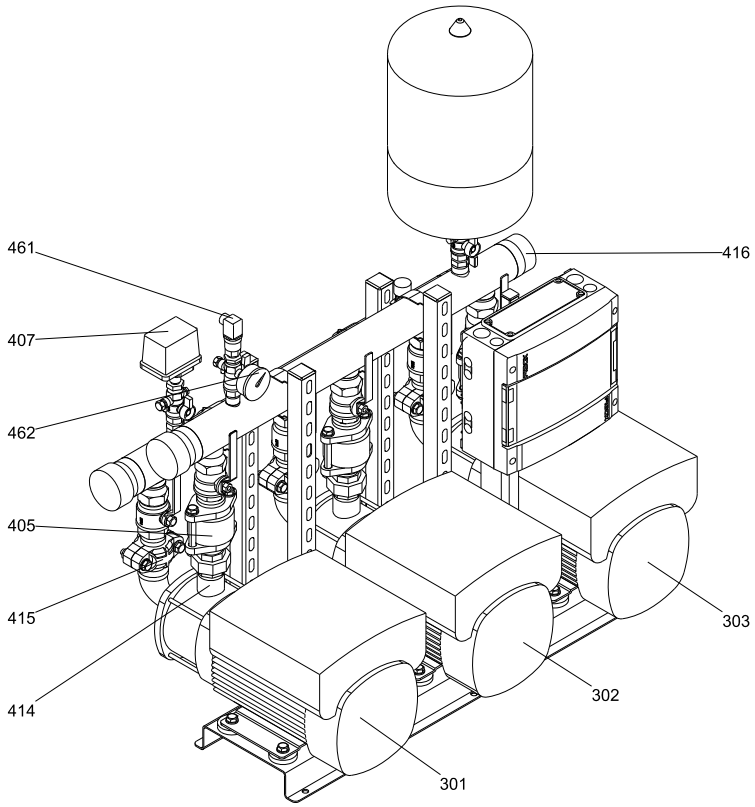

TM052210

33. Hydro Solo E / S

50 Hz

Manometer kit

Pos.	Pump type	Hydro Solo E / S	
	Kit No	*97896856*	*97896855*
3	Manometer 10 bar	1	-
	Manometer 16 bar	-	1

Non return valve kit

Pos.	Pump type	Hydro Solo E / S				
	Kit No	*96637443*	*96637444*	*96637445*	*98995447*	*98995448*
8	Non return valve DN 32	1	-	-	-	-
	Non return valve DN 40	-	1	-	-	-
	Non return valve DN 50	-	-	1	-	-
	Non return valve DN 65	-	-	-	1	-
	Non return valve DN 80	-	-	-	-	1

Pressure switch kit

Pos.	Pump type	Hydro Solo E / S
	Kit No	*98995466*
3	Pressure swich	1

Sensor kit

Pos.	Pump type	Hydro Solo E / S	
	Kit No	*96637452*	*96637453*
7	Pressure transducer 0 - 10 bar	1	-
	Pressure transducer 0 - 16 bar	-	1
-	Cable clip	1	1

Tank kit

Pos.	Pump type	Hydro Solo E / S	
	Kit No	*98995462*	*98995463*
2	Tank 18 liter, PN 10	1	-
	Tank 12 liter, PN 16	-	1

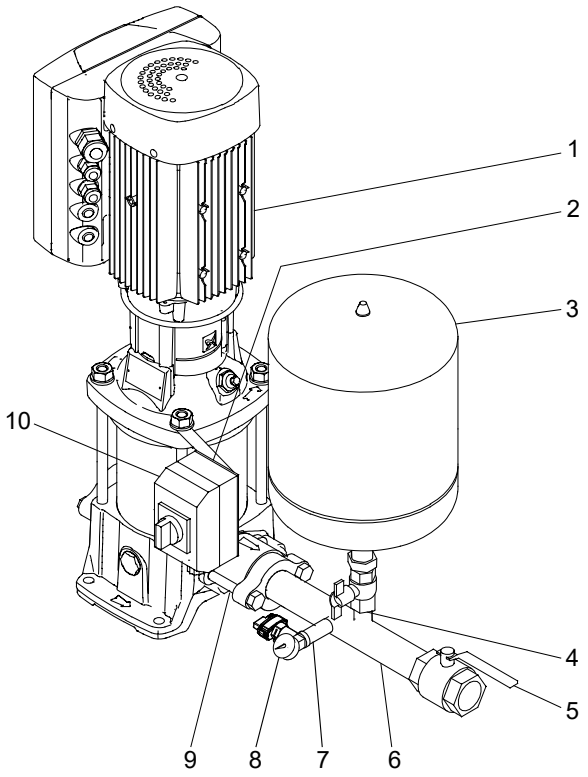

TM027562

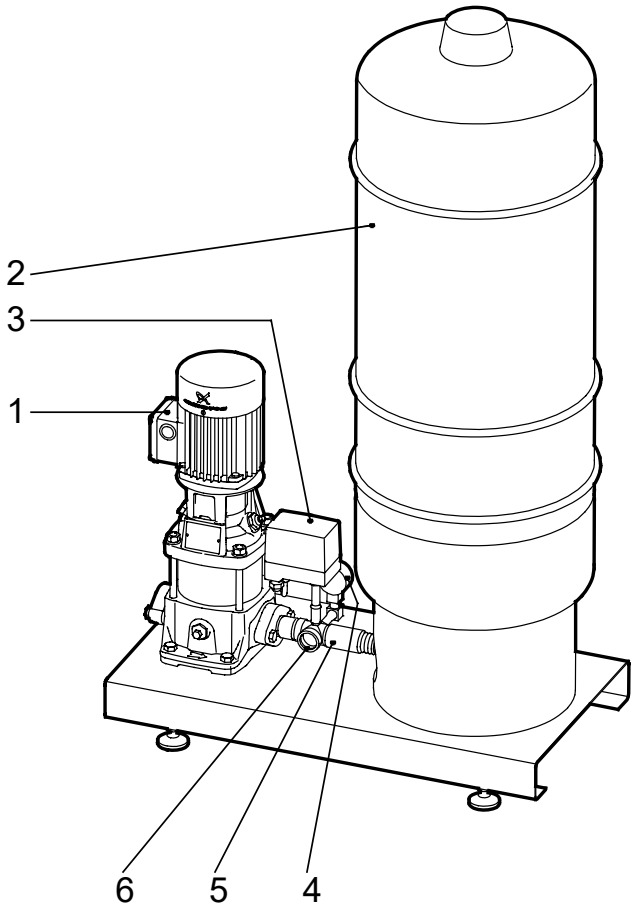

TM022587

34. Jet pumps & boosters

JP pumps

Handle kit

Pos.	Pump type	JP3-42 / JP4-47 / JP4-54 / JP5-48
	Kit No	***99521000***
190	Handle	1
190b	Screws	2

Motor fan, spare

Pos.	Pump type	JP3-42 / JP4-47	JP4-54 / JP5-48
	Kit No	***99577662***	***99577666***
14	Motor fan	1	1

Motor shell kit

Pos.	Pump type	JP3-42 / JP4-47	JP4-54 / JP5-48
	Kit No	***99521002***	***99521025***
44	Upper motor shell	1	1
42	Lower motor shell	1	1
43	Shell grid	1	1
45	Screws	6	6

Pump housing kit

Pos.	Pump type	JP3-42 / JP4-47 / JP4-54 / JP5-48	JP3-42 / JP4-47 / JP4-54 / JP5-48
	Model	**G1" thread**	**NPT thread**
	Kit No	***99521027***	***99521028***
1	Pump housing	1	1
28	O-ring	1	1
92	Clamp ring	1	1
93	Screw	1	1
94	Nut	1	1

Plugs kit

Pos.	Pump type	JP3-42 / JP4-47 / JP4-54 / JP5-48
	Kit No	***99521030***
31	Plug	2
32	O-ring	2

Shaft seal kit

Pos.	Pump type	JP3-42 / JP4-47 / JP4-54 / JP5-48
	Kit No	***99520998***
16/16a	Shaft seal	1

Hydraulic kit 50 Hz

Pos.	Pump type	JP3-42	JP4-47	JP4-54	JP5-48
	Kit No	***98715214***	***98715216***	***98715217***	***99520961***
19	Impeller	1	1	1	1
20	Diffuser	1	1	1	1
21	Venturi tube	1	1	1	1
28	O-ring	1	1	1	1
21a	O-ring	1	1	1	1
13	O-ring	1	1	1	1

Hydraulic kit 60 Hz

Pos.	Pump type	JP3-42	JP4-47	JP4-54	JP5-48
	Kit No	***98715218***	***98715219***	***98715220***	***99520960***
19	Impeller	1	1	1	1
20	Diffuser	1	1	1	1
21	Venturi tube	1	1	1	1
28	O-ring	1	1	1	1
21a	O-ring	1	1	1	1
13	O-ring	1	1	1	1

JP 3-42 / JP 4-47 / JP 4-54 / JP 5-48

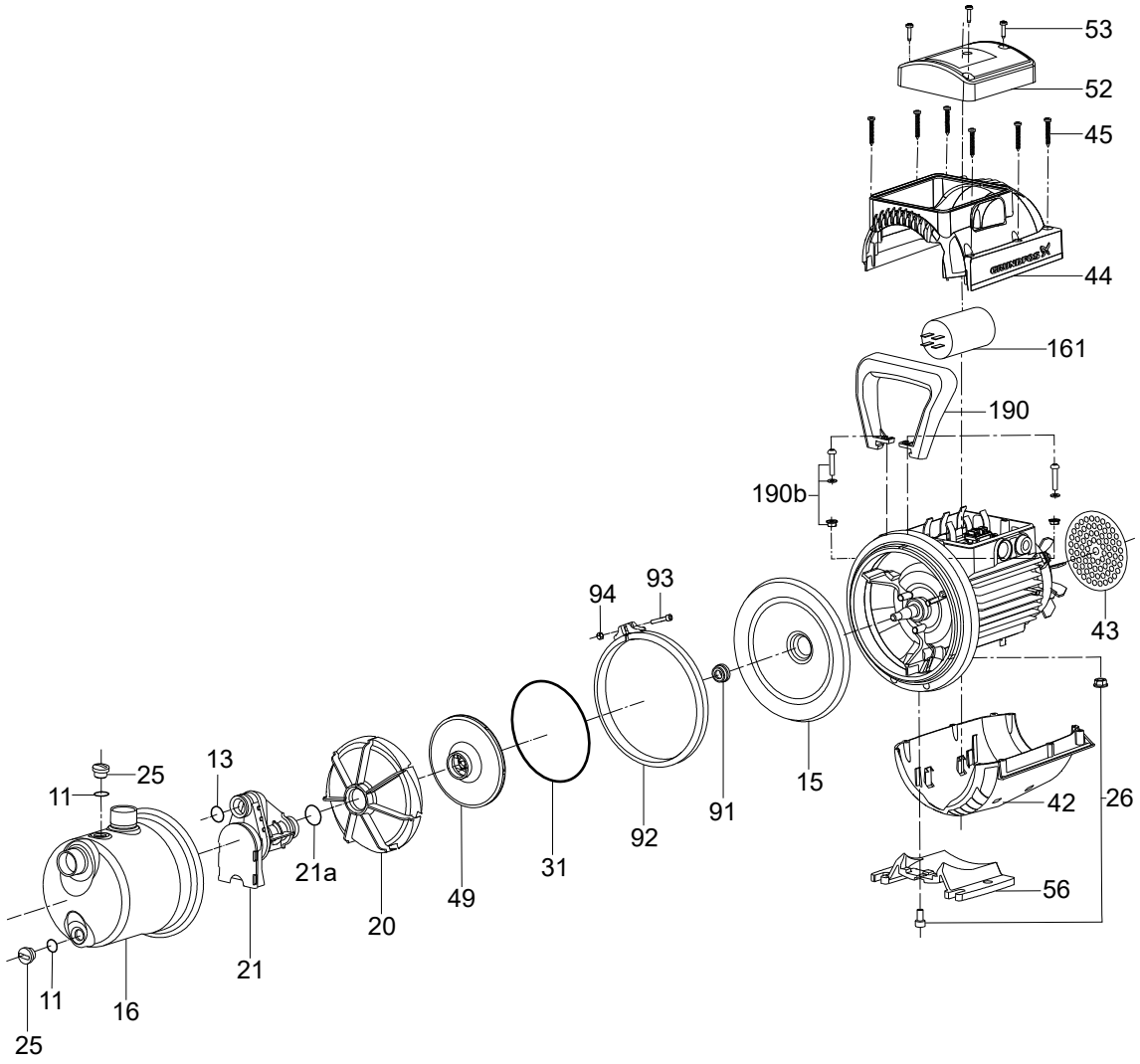

JP Boosters

Spare parts

Capacitor 50 Hz

Pos.	Pump type	JP3-42, JP4-47	JP4-54	JP5-48
		99521046	*99521052*	*99521065*
23	Capacitor 12.5µF	1	-	-
	Capacitor 16µF	-	1	-
	Capacitor 25µF	-	-	1

Capacitor 60 Hz

Pos.	Pump type	JP3-42	JP4-47, JP4-54	JP5-48
		99521063	*99521046*	*99521065*
23	Capacitor 10µF	1	-	-
	Capacitor 12.5µF	-	1	-
	Capacitor 25µF	-	-	1

5-way valve

Pos.	Pump type	JP3-42 / JP4-47 / JP4-54 / JP5-48
404	5 way valve	*99521067*

Manometer

Pos.	Pump type	JP3-42 / JP4-47 / JP4-54 / JP5-48
462	Manometer	*99521114*

Tank, horizontal

Pos.	Pump type	JP3-42 / JP4-47 / JP4-54 / JP5-48
306	Tank, horizontal	*99521115*

Tank, vertical

Pos.	Pump type	JP3-42 / JP4-47 / JP4-54 / JP5-48
305	Tank, vertical	*99521116*

Hose

Pos.	Pump type	JP3-42 / JP4-47 / JP4-54 / JP5-48
309	Hose	*99521117*

Pressure switch

Pos.	Pump type	JP3-42 / JP4-47 / JP4-54 / JP5-48
407	Pressure switch	*99521118*

Pressure manager

See the section on pressure manager for PM parts.

JP 3-42 / JP 4-47 / JP 4-54 / JP 5-48

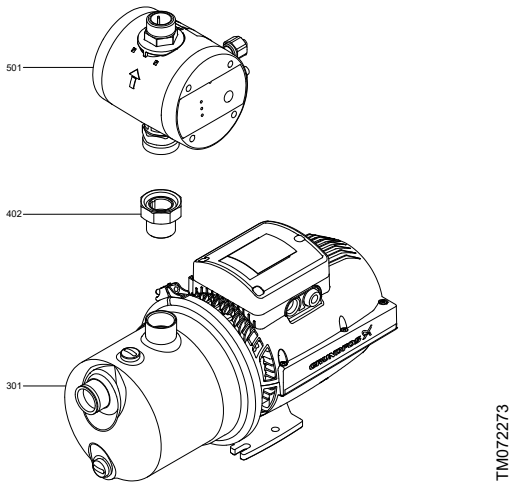

JP PM

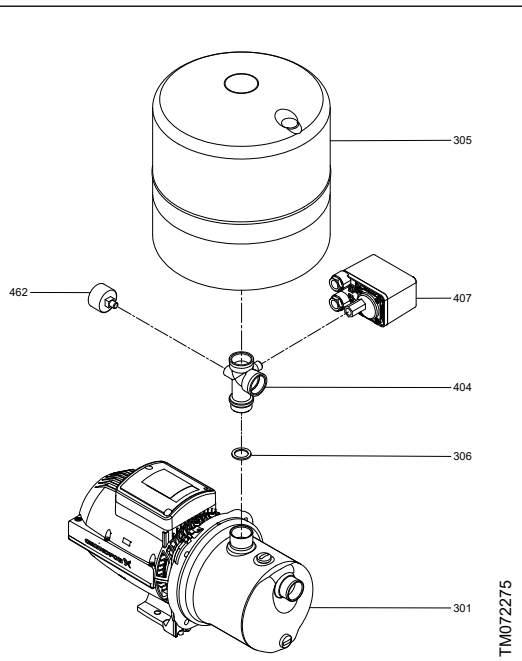

JP PT-V

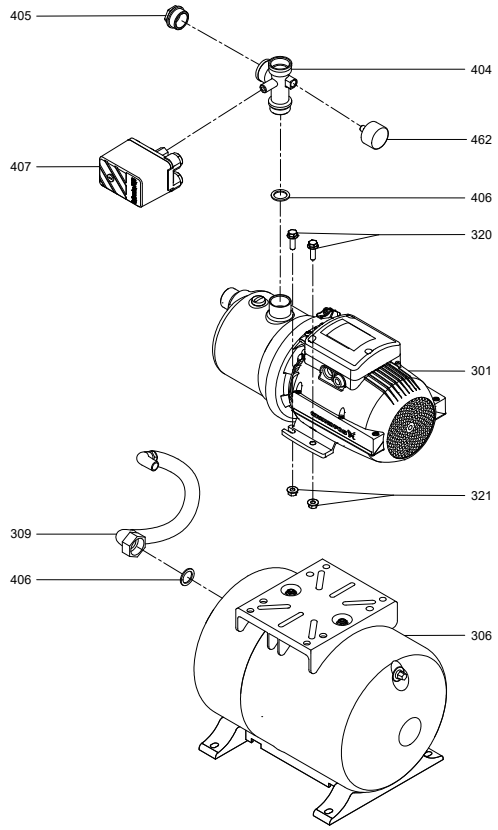

JP PT-H

JP 5, JP 6
50/60 Hz, Models B, C, D, E

Clamp

Pos.	Pump type	JP5	JP6
	Model	**B, D, E**	
	Kit No	***96957810***	
92	Clamp	1	
93	Hexagon socket head cap screw	1	
94	Lock nut M6	1	

Hydraulic parts

Pos.	Pump type	JP5	JP6
	Model	**B, D, E**	
	Kit No	***96768184***	***96768185***
13	O-ring	1	1
14	Ejector complete	1	1
49	Impeller	1	1
66	Washer	1	1
67	Lock nut M8	1	1
91	Seal ring	1	1

O-ring

Pos.	Pump type	JP5, JP6
	Model	**B, D, E**
	Kit No	***96768180***
11	O-ring	2
13	O-ring	1
25	Plug	2
31	O-ring	1

Shaft seal model D

Pos.	Pump type	JP5, JP6	JP5, JP6
	Model	**D**	**D**
	Material	**A**	**B**
	Kit No	***96768182***	***98963491***
62	Gasket	1	1
105	Shaft seal, material A	1	-
105	Shaft seal, material B	-	1
91	Seal ring, JP5	1	1
31	O-ring	1	1

Shaft seal and impeller model C

Pos.	Pump type	JP5	JP6
	Model	**C**	**C**
	Kit No	***985742***	***985743***
11	O-ring	2	2
13	O-ring	1	1
25	Pipe plug	1	1
25A	Ejector valve	1	1
31	O-ring	1	1
49	Impeller	1	1
62	O-ring	1	1
105	Shaft seal	1	1
91	Seal ring	1	1
93	Hexagon socket head cap screw	1	1
94	Lock nut	1	1

Shaft and rotor complete

Pos.	Pump type	JP6
	Model	**B, D, E**
	Kit No	***99012780***
172a	Shaft and rotor with spline	1
153	Ball bearing	1
154	Ball bearing	1

JP 5, JP 6

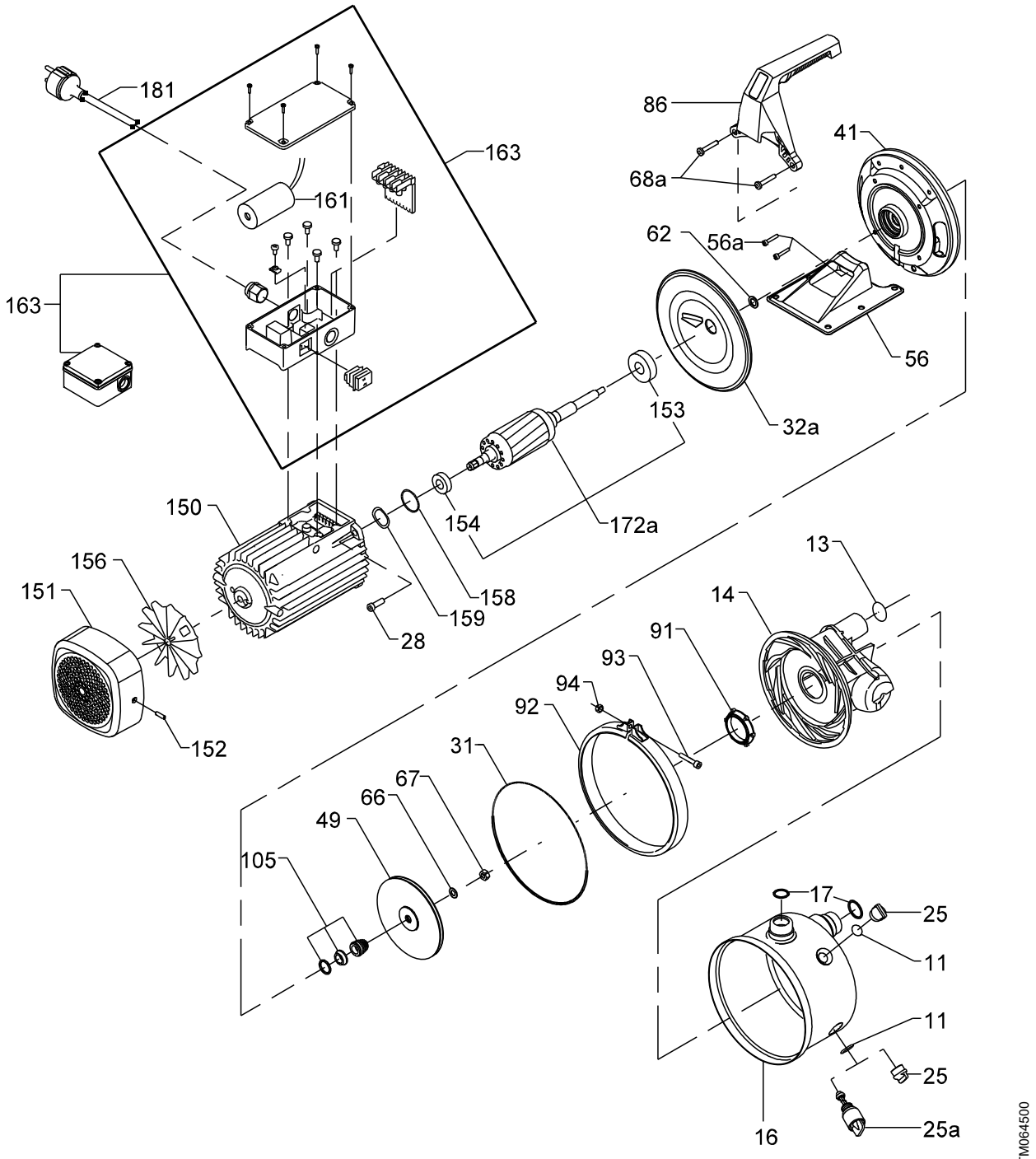

Material A

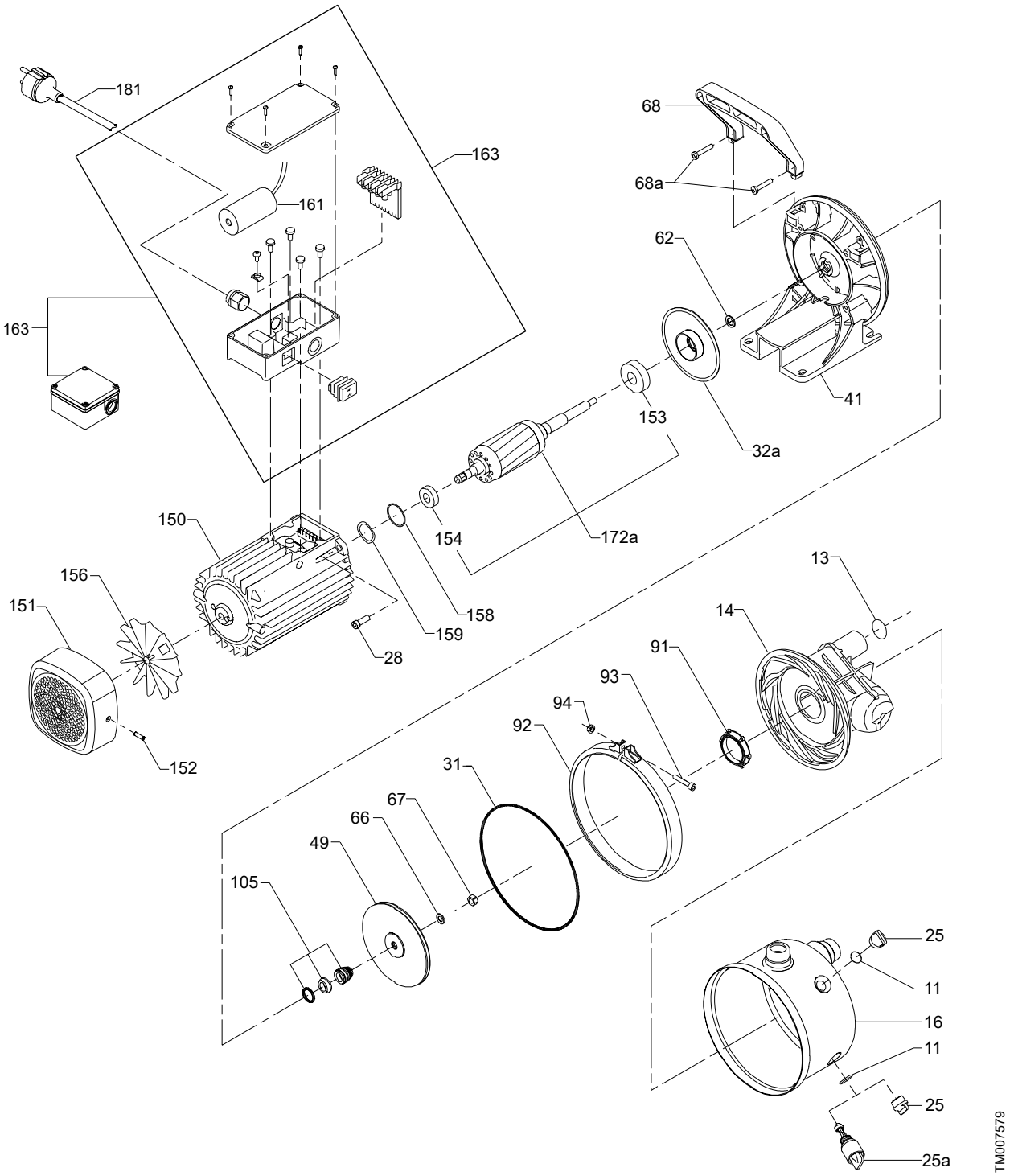
181
163
161
163
68
68a
62
41
153
32a
172a
154
150
158
159
28
156
151
152
13
14
91
93
94
92
31
67
66
49
105
25
11
16
11
25
25a
TM007579

Material B

JP 5, JP 6

50/60 Hz, Models B, C, D, E
Spare parts and bulk parts

Base plate

Pos.	Pump type	JP5, JP6
	Model	B, D, E
	Material	B
	Kit No	96588638
56	Base plate stainless complete	1

Capacitor

Pos.	Pump type	JP5	JP6	JP5, JP6
	Model	B, D, E	B, D, E	B, D, E
	Kit No	98933219	98933241	96588642
161	Capacitor 20µF	1	-	-
	Capacitor 25µF	-	1	-
	Capacitor 8µF	-	-	1

Cover plate

Pos.	Pump type	JP5	JP6
	Model	B, D, E	
	Kit No	97688246	
32a	Cover plate	1	

Ejector valve

Pos.	Pump type	JP5	JP6
	Model	B, D, E	B, D, E
	Kit No	96588659	96588678
25a	Ejector valve	1	1

Handle

Pos.	Pump type	JP5	JP6
	Model	B, D, E	B, D, E
	Material	A	B
	Kit No	97688244	96588661
68	Handle	1	1

Motor stool

Pos.	Pump type	JP5	JP6	JP5	JP6
	Model	B, D, E		B, D, E	
	Kit No	97688243		97688242	
41	Motor stool composite	1		-	
41	Motor stool aluminium	-		1	

Pump sleeve

Pos.	Pump type	JP5	JP6	JP5	JP6
	Model	B, D, E		B, D, E	
	Kit No	97688245		98686526	
16	Pump sleeve int. thread	1		-	
16	Pump sleeve ext. thread	-		1	

Terminal box with on/off switch

Pos.	Pump type	JP5	JP6
	Model	B, D, E	
	Kit No	96588646	96588647
163	Terminal box complete	1	1

Terminal box without on/off switch

Pos.	Pump type	JP5	JP6
	Model	B, D, E	
	Kit No	98996857	98996888
163	Terminal box complete	1	1

Terminal box 3 phase

Pos.	Pump type	JP5, JP6
	Model	B, D, E
	Kit No	98996890
163	Terminal box complete, 3 phase	1

Ejector, bulk

Pos.	Pump type	JP5	JP6
	Model	B, D, E	B, D, E
	Material	A	B
	Kit No	97704920	97705042
68	Ejector complete	5	5

Gasket, bulk

Pos.	Pump type	JP5	JP6
	Model	B, D, E	
	Kit No	96603455	
15	Gasket	10	

O-ring, bulk

Pos.	Pump type	JP5, JP6
	Model	B, D, E
	Kit No	96549277
31	O-ring	20

Pipe plug, bulk

Pos.	Pump type	JP5	JP6
	Model	B, D, E	
	Kit No	98470814	
25	Pipe plug	20	

Seal ring, bulk

Pos.	Pump type	JP5	JP6
	Model	B, D, E	B, D, E
	Kit No	96803029	96928591
91	Seal ring	10	10

Shaft seal, bulk

Pos.	Pump type	JP5	JP6
	Model	B, D, E	
	Kit No	96536505	
105	Shaft seal	10	

JP 5, JP 6

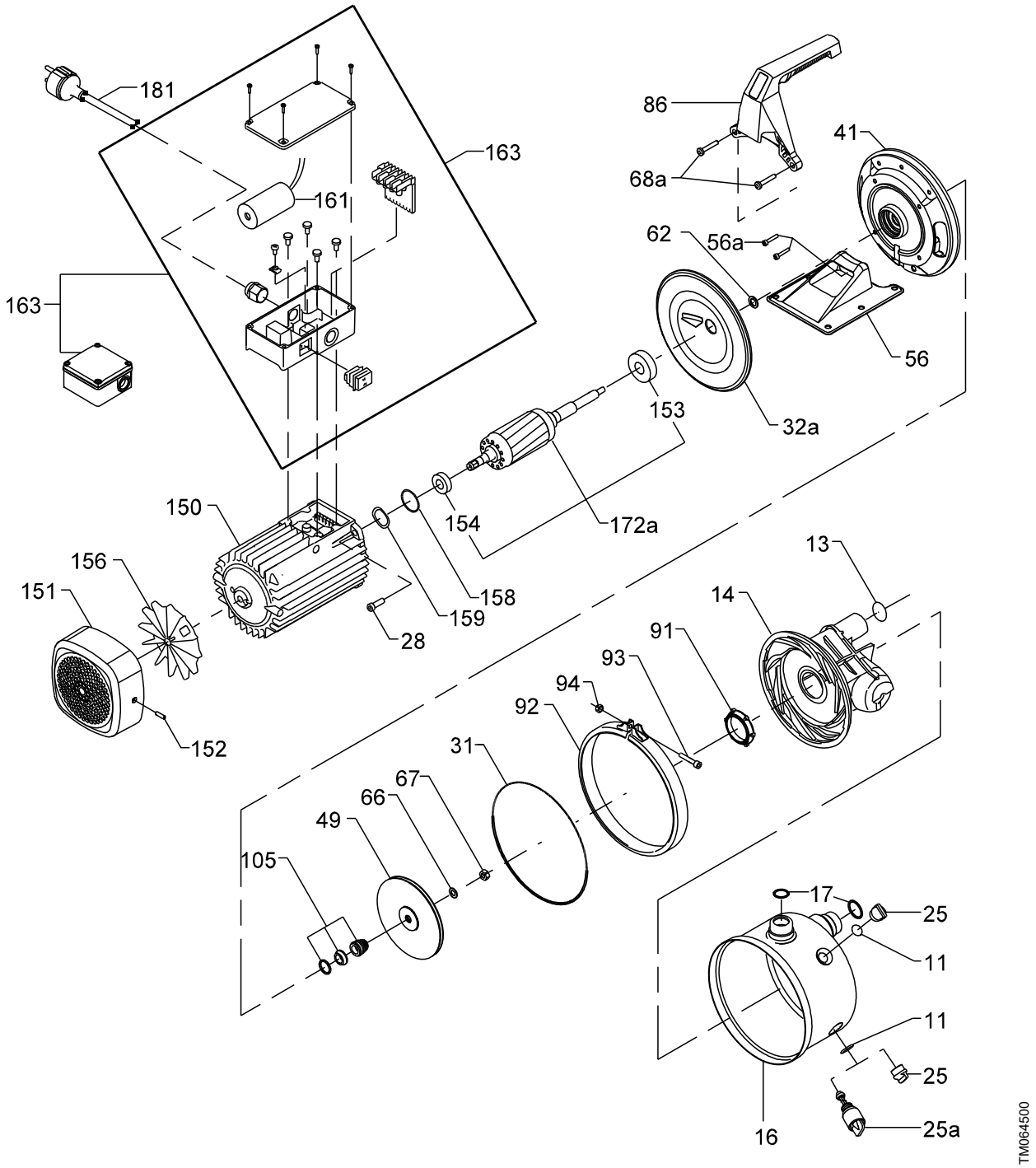

Material A

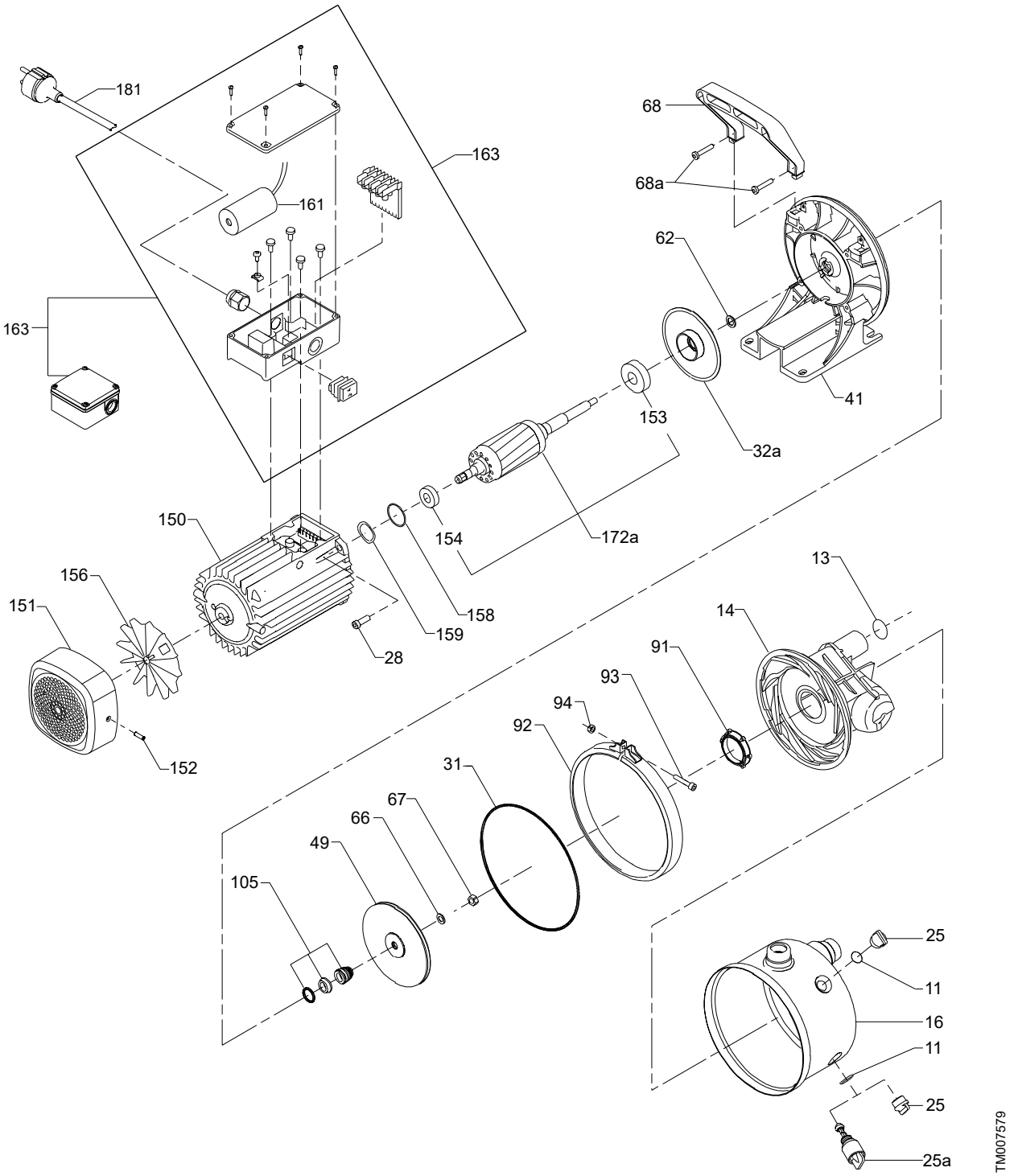
181
163
161
163
68
68a
62
41
153
32a
172a
154
150
158
159
28
156
151
152
13
14
91
93
94
92
31
67
66
49
105
25
11
16
11
25
25a
TM007579

Material B

JP 5, JP 6 Booster

50/60 Hz, Models with pressure tank

5-way fitting and Gasket

Pos.	Pump type	JP5, JP6
	Model	B, D, E
	Kit No	*98777519*
404	Fitting 5 way with union complete	1
406	Gasket	1

Manometer

Pos.	Pump type	JP5, JP6
	Model	B, D, E
	Kit No	*98906913*
462	Manometer	1

Tank assembly kit

Pos.	Pump type	JP5, JP6
	Model	B, D, E
	Kit No	*98777517*
307	Vibration absorber	2
406	Gasket	1
320	Hex cap screw	4
321	Lock washer	4

Pressure tank

Pos.	Kit No	*98906910*	*98906911*	*96553382*
	Model	JP PT	JP PT	JP PT
305	24 liter GT-H tank	1	-	-
305	60 liter GT-H tank	-	1	-
305	18 liter GT-H tank	-	-	1
406	Gasket	2	2	2

Tube and gasket

Pos.	Pump type	JP5, JP6
	Model	B, D, E
	Kit No	*98777515*
309	Rubber hose with fittings	1
406	Gasket	1

50/60 Hz, Models with PM1, PM2

Bush with o-ring PM1/2

Pos.	Pump type	JP5, JP6
	Model	B, D, E
	Kit No	*98488493*
402	Bush 1" Gas Connection	1
403	Gasket flat	2

JP 5, JP 6 Booster

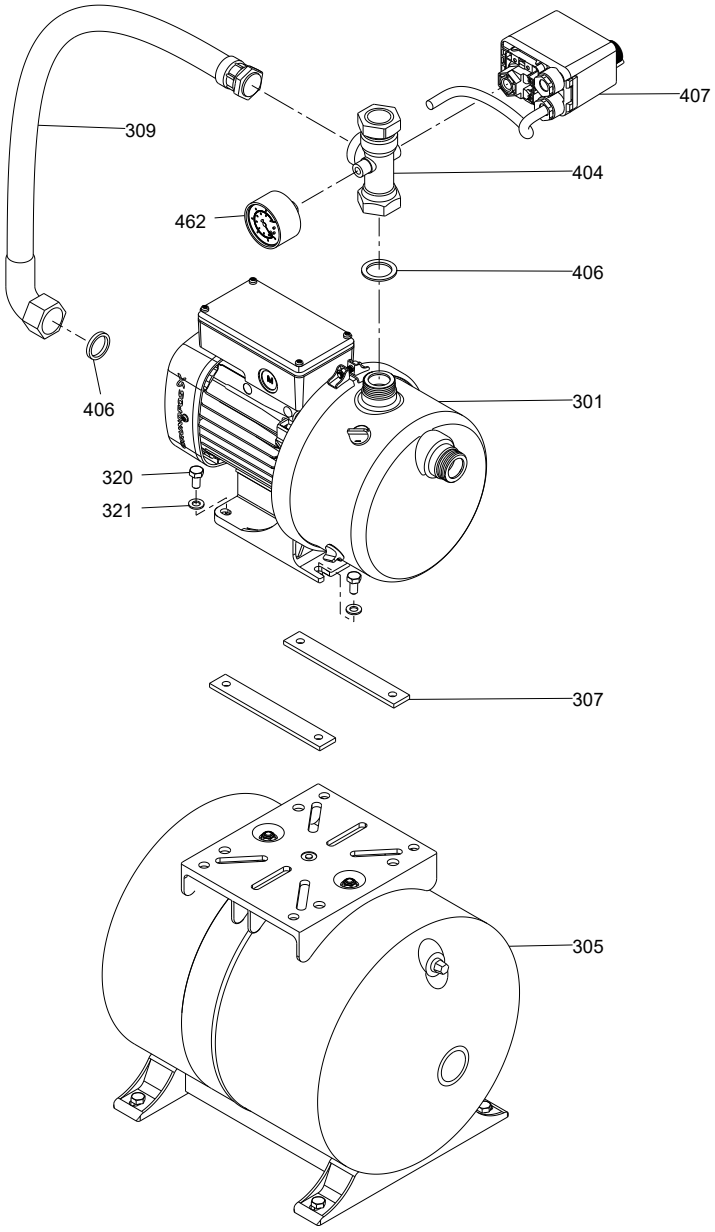

JP Booster PM 1 / PM 2

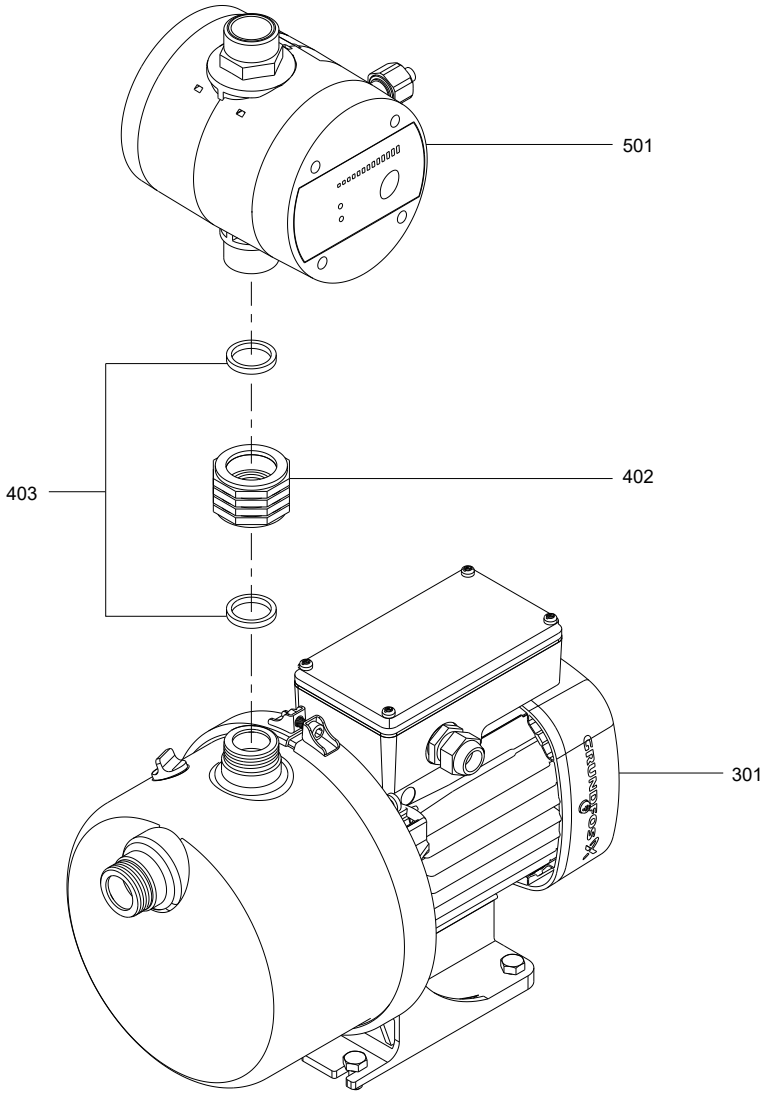

JP Booster with pressure tank

JPC, JPC PM

50/60 Hz

JPC Name change

Old name	New name
JPC 2	JPC 3-42
JPC 3	JPC 4-47
JPC 4	JPC 4-54

NOTE: The service kits uses the old name until 2017.

Capacitor

Pos.	Pump type	JPC	JPC	JPC	JPC	JPC
	Model	**4**	**2, 3**	**2**	**2**	**3, 4**
	Frequency	**50 Hz**	**60 Hz**	**60 Hz**	**60 Hz**	**60 Hz**
	Voltage	**230 V**	**230 V**	**230 V**	**115 V**	**115 V**
	Kit No	***98715234***	***98715231***	***98715233***	***98715236***	***98715238***
41	Capacitor, 16 uF	1	-	-	-	-
41	Capacitor, 10 uF	-	1	-	-	-
41	Capacitor, 12,5 uF	-	-	1	-	-
41	Capacitor, 40 uF	-	-	-	1	-
41	Capacitor, 50 uF	-	-	-	-	1

Impeller kit

Pos.	Pump type	JPC	JPC	JPC	JPC	JPC	JPC
	Model	**2**	**3**	**4**	**2**	**3**	**4**
	Frequency	**50 Hz**	**50 Hz**	**50 Hz**	**60 Hz**	**60 Hz**	**60 Hz**
	Kit No	***98715214***	***98715216***	***98715217***	***98715218***	***98715219***	***98715220***
16	O-ring	1	1	1	1	1	1
20	Diffuser	1	1	1	1	1	1
19	Impeller	1	1	1	1	1	1
21	Venturi set	1	1	1	1	1	1

Shaft seal kit

Pos.	Pump type	JPC
	Model	**2, 3, 4**
	Frequency	**50/60 Hz**
	Kit No	***98715213***
18	Shaft seal, stationary part	1
17	Shaft seal, rotating part	1
16	O-ring	1

Booster parts

See the section on pressure manager for PM parts.

JPC, JPC Booster

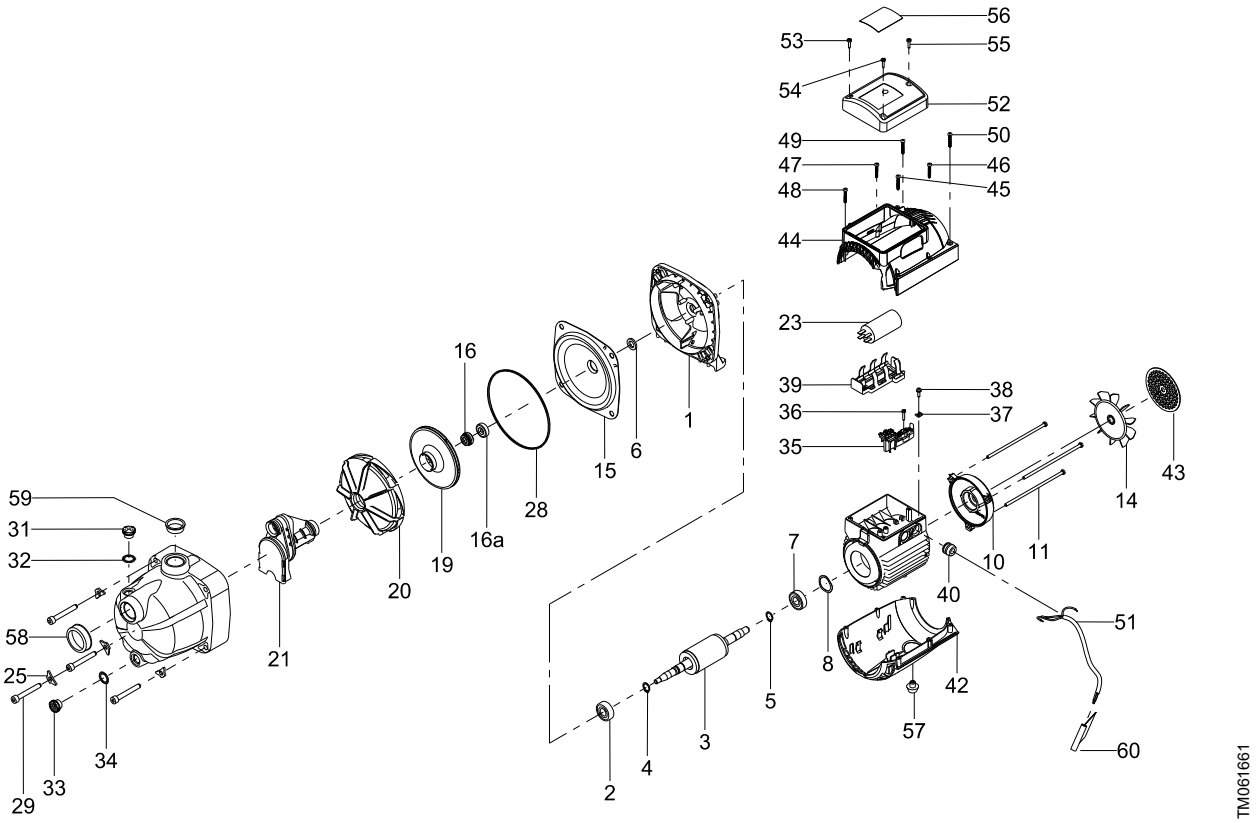

JPBasic, JPBasic Boosters, JPA, JPA PT, JPA PM

50 Hz

JPBasic and JPBasic Booster Name change

Old name	New name
JPBasic 2	JPA 3-42
JPBasic 3	JPA 4-47
JPBasic 4	JPA 4-54
JPBasic 5	JPA 5-61
JPBasic 7	JPA 8-62
JPBasic 9	JPA 12-41
JPBasic 10	JPA 12-51

NOTE: The service kits uses the old name until 2017.

Capacitor

Pos.	Pump type	JPBasic	JPBasic	JPBasic	JPBasic
	Model	**2, 3**	**4**	**5, 9**	**7, 10**
	Kit No	***98715206***	***98715207***	***98715209***	***98715210***
23	Capacitor, 12.5 uF	*1*	-	-	-
23	Capacitor, 16 uF	-	1	-	-
23	Capacitor, 31.5 uF	-	-	1	-
23	Capacitor, 40 uF	-	-	-	1

Hydraulic kit

Pos.	Pump type	JPBasic	JPBasic
	Model	**2**	**3, 4**
	Kit No	***98715192***	***98715194***
67	Venturi set	1	1
28	O-ring	1	1
6	Diffuser	1	1
4	Impeller	1	1

Pos.	Pump type	JPBasic
	Model	**5, 7**
	Kit No	***98715196***
2	Ejector body	1
9	Nozzle	1
8	Venturi	1
27	O-ring	1
29	O-ring	1
26	Priming plug	1
26a	Aluminium gasket	1
4	Impeller	1

Pos.	Pump type	JPBasic
	Model	**9, 10**
	Kit No	***98715197***
33	Nozzle	1
34	Venturi	1
37	O-ring	1
35	O-ring	1
4	Impeller	1

Shaft seal kit

Pos.	Pump type	JPBasic	JPBasic	JPBasic
	Model	**2, 3, 4**	**5, 7**	**9, 10**
	Kit No	***98715199***	***98715201***	***98715202***
18	Shaft seal, stationary part	1	1	1
17	Shaft seal, rotating part	1	1	1
36	Disc seal	1	-	-
28	O-ring	1	1	1

Booster parts

See the section on pressure manager for PM parts.

JPBasic

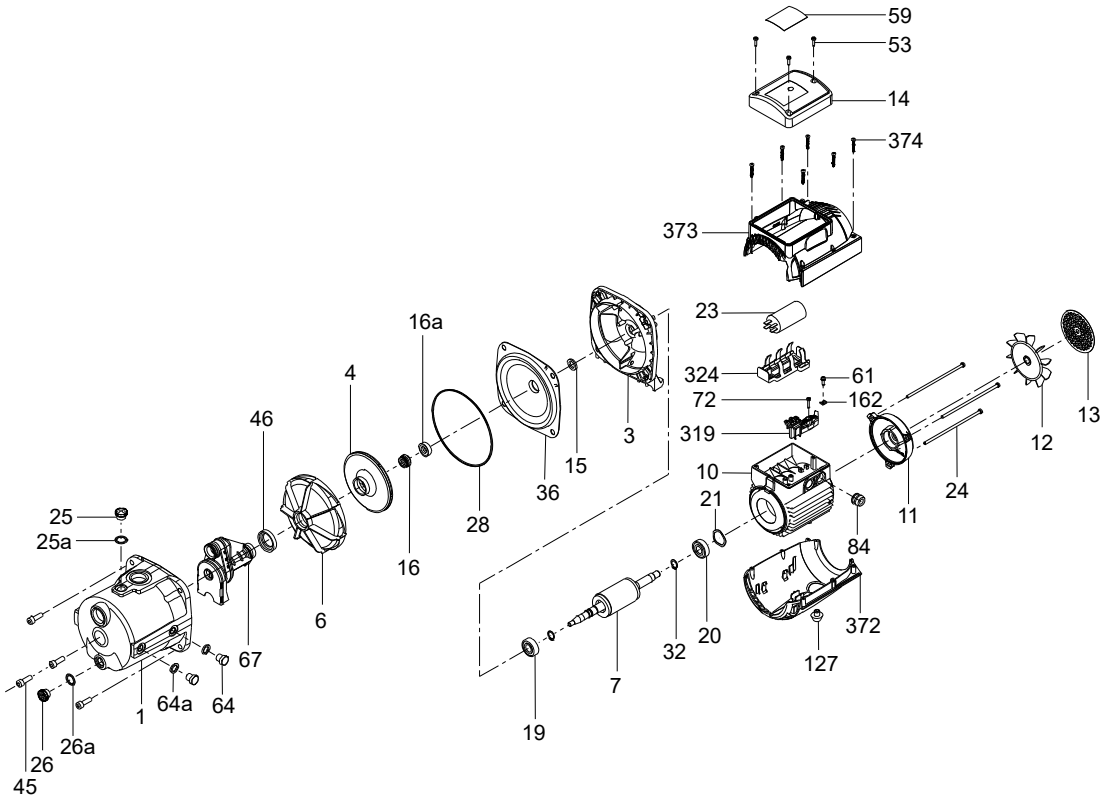

TM061887

JPBasic 2, 3, 4, JPA 3-42, JPA 4-47, JPA 4-54

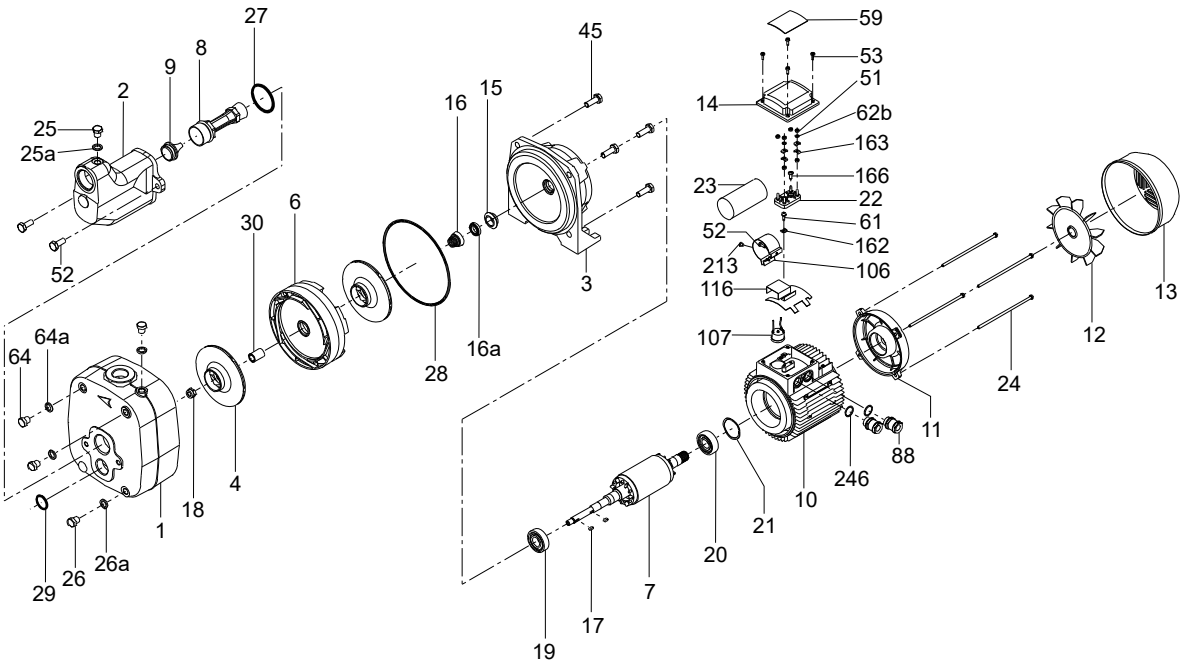

TM061886

JPBasic 5, 7, JPA 5-61, JPA 8-62

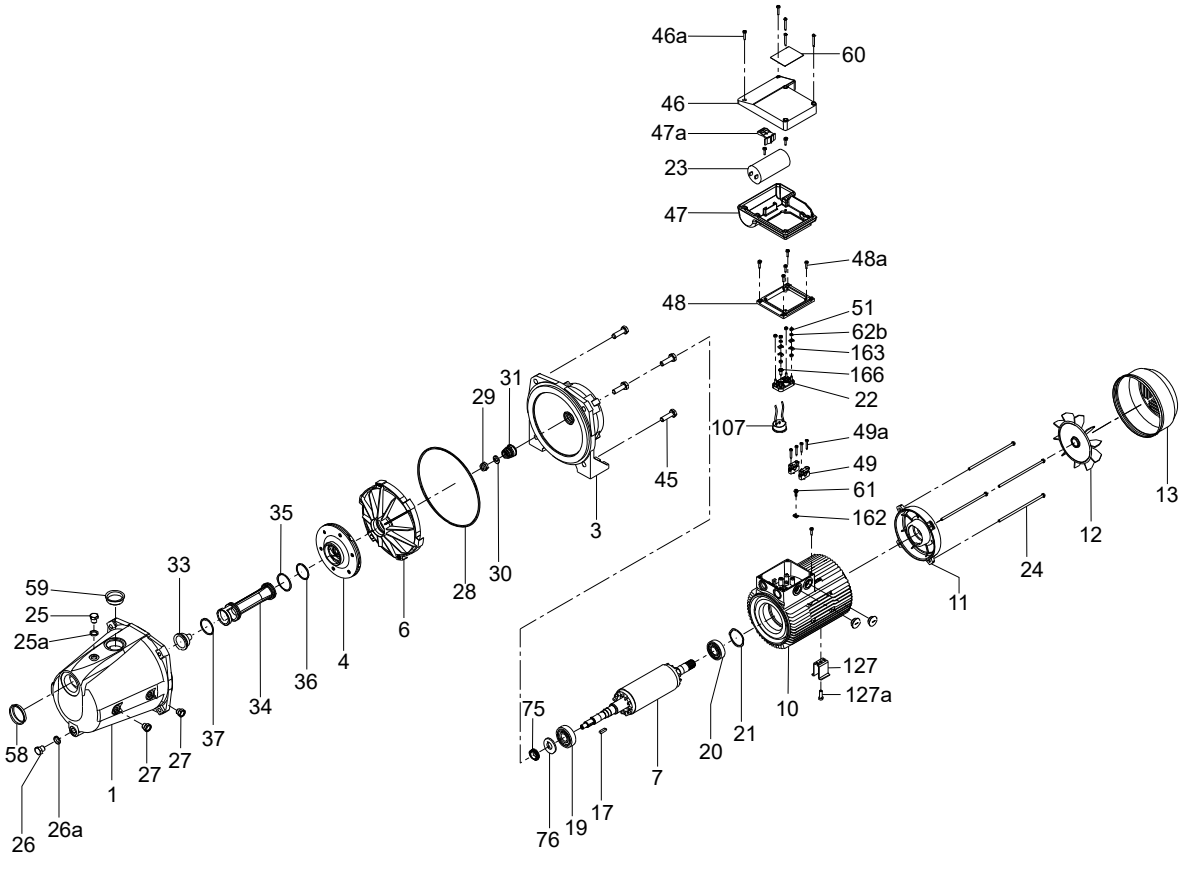

JPBasic 9, 10, JPA 12-41, JPA 12-51

JDBasic, JDBasic Boosters, JPD, JPD PT

50 Hz

JDBasic and JDBasic Booster Name change

Old name	New name
JDBasic 2	JPD 4-47
JDBasic 4	JPD 4-54
JDBasic 5	JPD 5-61
JDBasic 7	JPD 8-62

NOTE: The service kits uses the old name until 2017.

Capacitor

Pos.	Pump type	JDBasic	JDBasic	JDBasic	JDBasic
	Model	**4**	**4**	**5**	**7**
	Frequency	**50 Hz**	**60 Hz**	**50/60 Hz**	**50/60 Hz**
	Kit No	***98715444***	***98715445***	***98715447***	***98715449***
23	Capacitor, 16 uF	1	-	-	-
23	Capacitor, 12.5 uF	-	1	-	-
23	Capacitor, 31.5 uF	-	-	1	-
23	Capacitor, 40 uF	-	-	-	1

Hydraulic kit

Pos.	Pump type	JDBasic	JDBasic	JDBasic	JDBasic	JDBasic	JDBasic
	Model	**2**	**4**	**4**	**5**	**5**	**7**
	Frequency	**50/60 Hz**	**50 Hz**	**60 Hz**	**50 Hz**	**60 Hz**	**50/60 Hz**
	Kit No	***98715416***	***98715417***	***98715418***	***98715419***	***98715441***	***98715442***
36	Gasket	1	1	1	-	-	-
28	O-ring	1	1	1	1	1	1
6	Diffuser	1	1	1	1	1	1
4	Impeller	1	1	1	2	2	2

Shaft seal kit

Pos.	Pump type	JDBasic	JDBasic
	Model	**2, 4**	**5, 7**
	Kit No	***98715239***	***98715240***
16a	Shaft seal, stationary part	1	1
16	Shaft seal, rotating part	1	1
28	O-ring	-	1

Booster parts

See the section on pressure manager for PM parts.

JDBasic

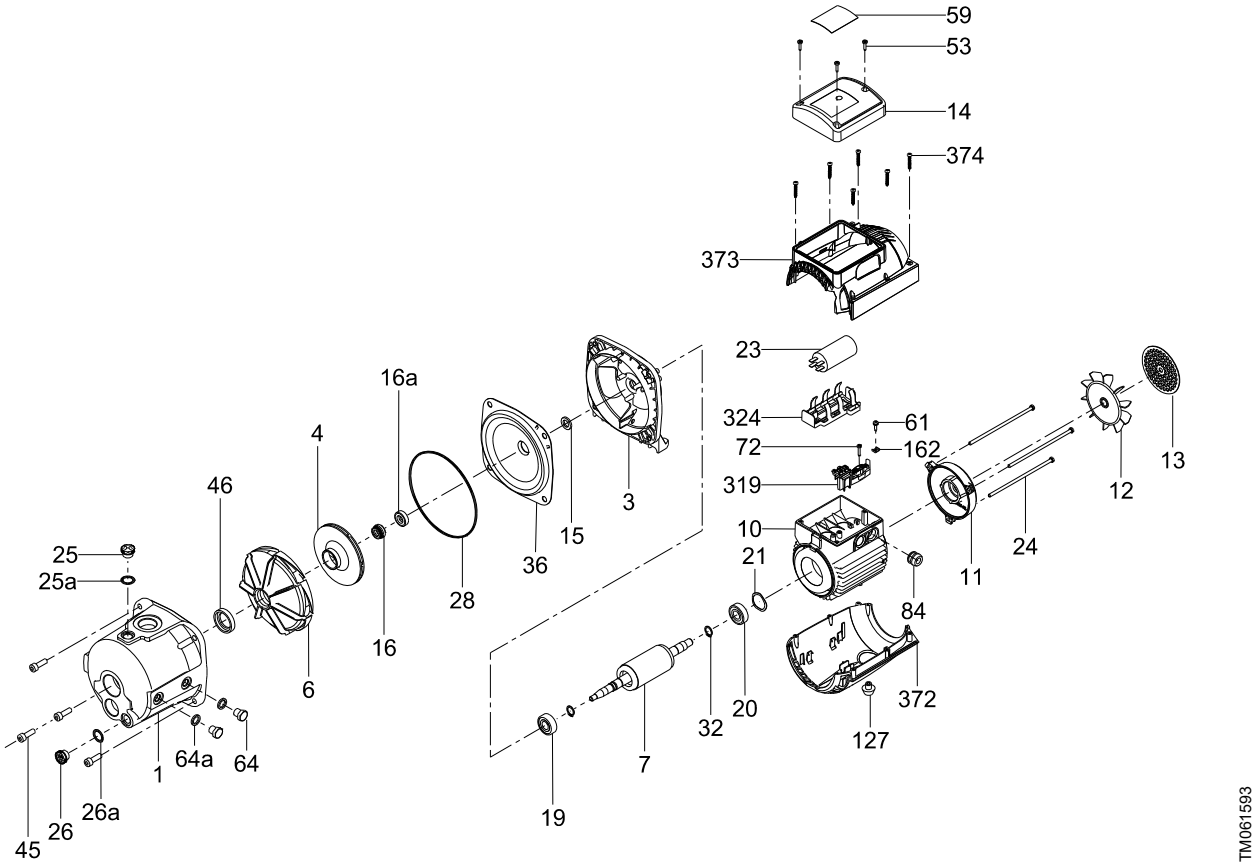

JDBasic 2, 4, JPD 4-47, JPD 4-54

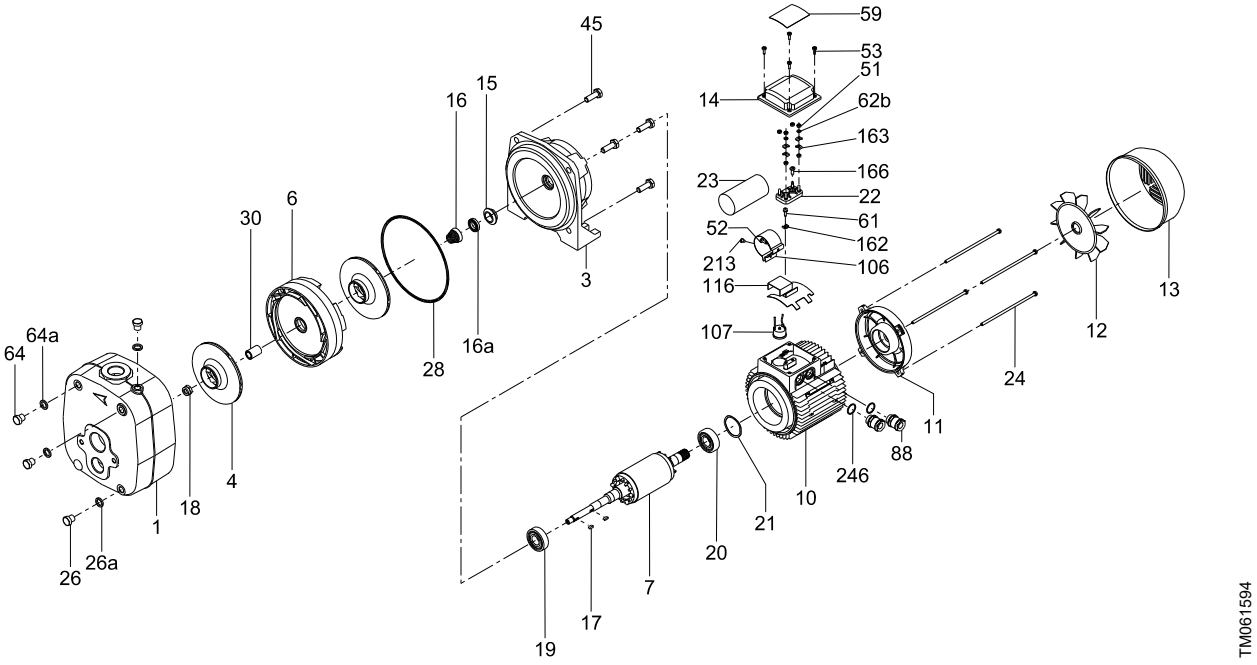

JDBasic 5, 7, JPD 5-61, JPD 8-62

JP PS USA (new models)

Pressure switch, 115-230 V, 60 Hz

Pos.	Pump type	JP PS 13 03 137 / JP PS 18 05 154 / JP PS 18 07 177 / JP PS 22 10 157
	Kit No	***98296792***
407	Pressure switch	1

Hose for pressure switch kit, 115-230 V, 60 Hz

Pos.	Pump type	JP PS 13 03 137 / JP PS 18 05 154 / JP PS 18 07 177 / JP PS 22 10 157
	Kit No	***98289931***
74	Hose 1/4 NPT	1
71	Clip	1
72	Fitting 1/4 NPT	1
73	O-ring	1

Terminal box cover, 115-230 V, 60 Hz

Pos.	Pump type	JP PS 13 03 137 / JP PS 18 05 154 / JP PS 18 07 177 / JP PS 22 10 157
	Kit No	***99597813***
51	Terminal box cover	1
53	Screws	6

Motor fan, spare

Pos.	Pump type	JP PS 13 03 137 / JP PS 18 05 154	JP PS 18 07 177 / JP PS 22 10 157
	Kit No	***99628558***	***99628559***
14	Motor fan	1	1

Motor shell kit

Pos.	Pump type	JP PS 13 03 137 / JP PS 18 05 154	JP PS 18 07 177 / JP PS 22 10 157
	Kit No	***99628502***	***99628513***
44	Upper motor housing	1	1
42	Lower motor housing	1	1
43	Motor housing grid	1	1
53	Screws	6	6

Motor foot, spare

Pos.	Pump type	JP PS 13 03 137 / JP PS 18 05 154 / JP PS 18 07 177 / JP PS 22 10 157
	Kit No	***99658433***
56	Motor foot	1

Pump housing kit

Pos.	Pump type	JP PS 13 03 137 / JP PS 18 05 154 / JP PS 18 07 177 / JP PS 22 10 157
	Model	**NPT thread**
	Kit No	***99628515***
1	Pump housing	1
28	O-ring	1
92	Pump house ring	1
93	Screw	1
94	Nut	1
	Washer	1

Plug kit

Pos.	Pump type	JP PS 13 03 137 / JP PS 18 05 154 / JP PS 18 07 177 / JP PS 22 10 157
	Kit No	***99628516***
26	Plug	2
32	O-ring	2

Shaft seal kit

Pos.	Pump type	JP PS 13 03 137 / JP PS 18 05 154 / JP PS 18 07 177 / JP PS 22 10 157
	Kit No	***99628500***
16	Shaft seal, rotary part	1
16a	Shaft seal, stationary part	1
21a	O-ring	1

O-ring kit

Pos.	Pump type	JP PS 13 03 137 / JP PS 18 05 154 / JP PS 18 07 177 / JP PS 22 10 157
	Kit No	***99628546***
13, 21a	**O-ring**	**2**
28	O-ring	1

Capacitor, spare

Pos.	Pump type	JP PS 13 03 137	JP PS 18 05 154	JP PS 18 07 177	JP PS 22 10 157
	Kit No	***99628551***	***99628552***	***99628552***	***99628554***
161	Capacitor	1	1	1	1

Hydraulic kit 60 Hz

Pos.	Pump type	JP PS 13 03 137	JP PS 18 05 154	JP PS 18 07 177	JP PS 22 10 157
	Kit No	***99628493***	***99628496***	***99628497***	***99628499***
19	Impeller	1	1	1	1
20	Diffuser	1	1	1	1
21	Venturi tube	1	1	1	1
28	O-ring	1	1	1	1
21a	O-ring	1	1	1	1
13	O-ring	1	1	1	1

JP PS 13 03 137 / JP PS 18 05 154 / JP PS 18 07 177 / JP PS 22 10 157

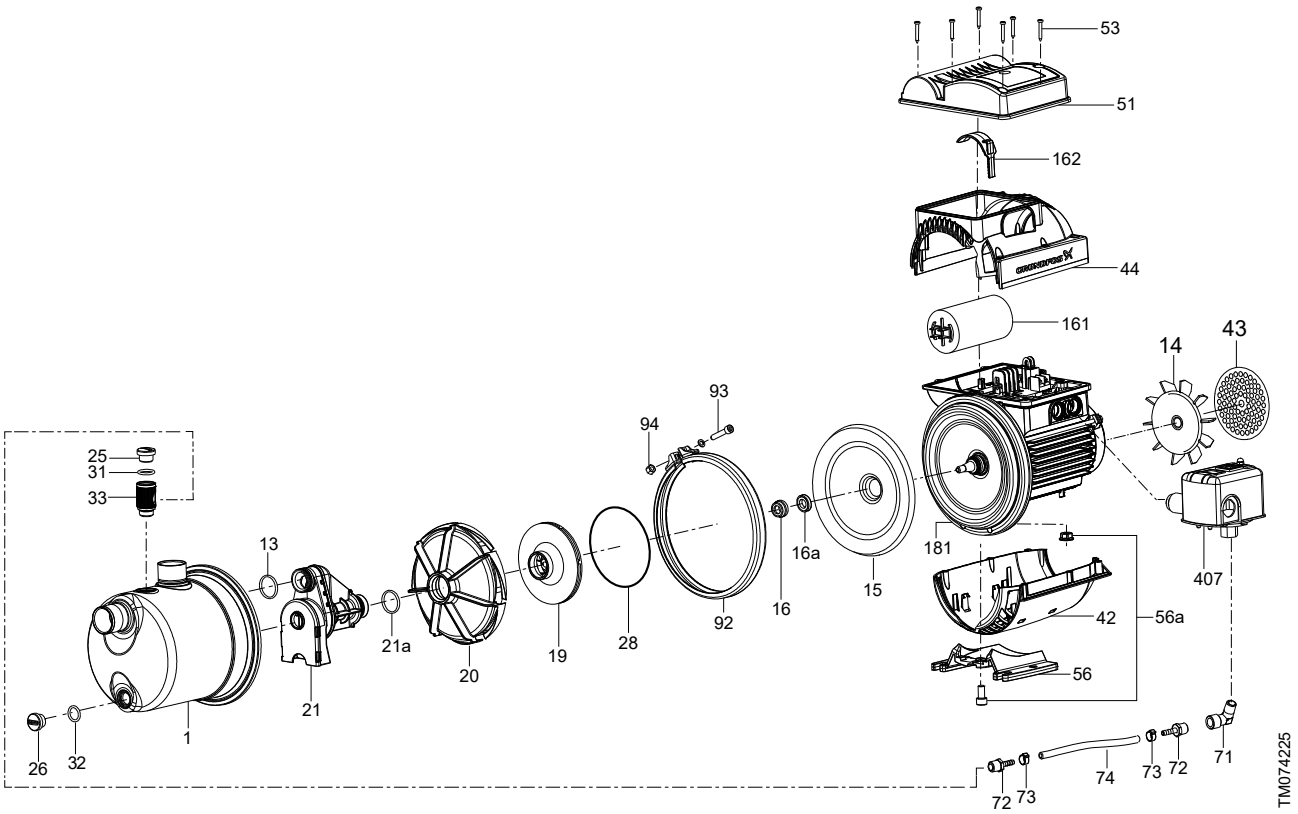

Jet booster USA (previous models)

60 Hz

Capacitor

Pos.	Pump type	Jet boosters							
	Model	JP05D-CI JP05S-CI JP05S-EC JP05S-SS	JP07S-CI-1 JP07S-EC-1 JP07S-SS-1	JP07D-CI JP07S-CI JP07S-EC JP07S-SS	JP10S-CI JP10S-EC JP10S-SS	JP10S-CI-1 JP10S-SS-1 JP10S-EC-1	JP15D-CI JP15S-CI JP20S-CI-1	JP03S-CI JP03S-EC	JP20D-CI JP20S-CI JP30S-CI
	Kit No		*98298105*		*98298109*		*98298114*	*98298117*	
23	Capacitor, 50 uF		1		-		-	-	
23	Capacitor, 80 uF		-		1		-	-	
23	Capacitor, 31.5 uF		-		-		1	-	
23	Capacitor, 40 uF		-		-		-	1	

Dual voltage block

Pos.	Pump type	Jet boosters
	Model	JP03S-CI, JP03S-EC, JP05D-CI, JP05S-CI, JP05S-EC, JP05S-SS, JP07S-CI-1, JP07S-EC-1, JP07S-SS-1, JP10S-EC-1, JP07D-CI, JP07S-CI, JP07S-EC, JP07S-SS, JP10S-CI, JP10S-CI-1, JP10S-EC, JP10S-SS, JP10S-SS-1
	Kit No	*98296793*
53	Dual Voltage Block	1

Hydraulic kit

Pos.	Pump type	Jet boosters						
	Model	JP035-CI	JP03S-EC	JP05D-CI	JP05S-CI JP05S-SS	JP05S-EC	JP07S-CI-1 JP07S-SS-1	JP07S-EC-1
	Kit No	*98419545*	*98419546*	*98288758*	*98288772*	*98419548*	*98419550*	*98419552*
6	Diffuser	1	1	1	1	1	1	1
4	Impeller	1	1	1	1	1	1	1
67	Venturi set	1	1		1	1	1	

Pos.	Pump type	Jet boosters						
	Model	JP07D-CI	JP07S-CI JP07S-SS	JP07S-EC	JP10S-CI JP10S-SS	JP10S-CI-1 JP10S-SS-1	JP10S-EC	JP15D-CI
	Kit No	*98288824*	*98288827*	*98419553*	*98288830*	*98419554*	*98419558*	*98288841*
6	Diffuser	1	1	1	1	1	1	1
4	Impeller	1	1	1	1	1	1	1
67	Venturi set		1	1	1	1	1	1

Pos.	Pump type	Jet boosters					
	Model	JP15S-CI	JP20S-CI-1	JP20D-CI	JP20S-CI	JP30S-CI	JP10S-EC-1
	Kit No	*98288842*	*98419559*	*98288845*	*98288846*	*98288848*	*98419571*
6	Diffuser	1	1	1	1	1	1
4	Impeller	1	1	1	1	1	1
34	Ejector kit	1	1	1	1	1	
67	Venturi set	-	-	-	-	-	1

Pressure switch

Pos.	Pump type	Jet boosters
	Model	All
	Kit No	*98296792*
40	Pressure Switch	1

Shaft seal + impeller kit

Pos.	Pump type	Jet boosters								
	Model	JP05D-CI JP07S-CI JP07S-EC JP07S-SS	JP03S-CI JP03S-EC JP05S-CI JP05S-EC	JP05S-SS JP07S-CI-1 JP07S-EC-1 JP07S-SS-1	JP07D-CI JP10S-CI JP10S-CI-1 JP10S-EC	JP10S-SS JP10S-SS-1 JP10S-EC-1	JP15S-CI JP15D-CI	JP20S-CI JP20D-CI	JP20S-CI-1	JP30S-CI
	Kit No	*98288907*	*98288909*		*98288931*		*98288932*	*98288934*	*98419716*	*98288935*
16, 16a	Shaft seal kit	1	1		1		1	1	1	1
4	Impeller	1	1		1		1	1	1	1

Jet boosters USA

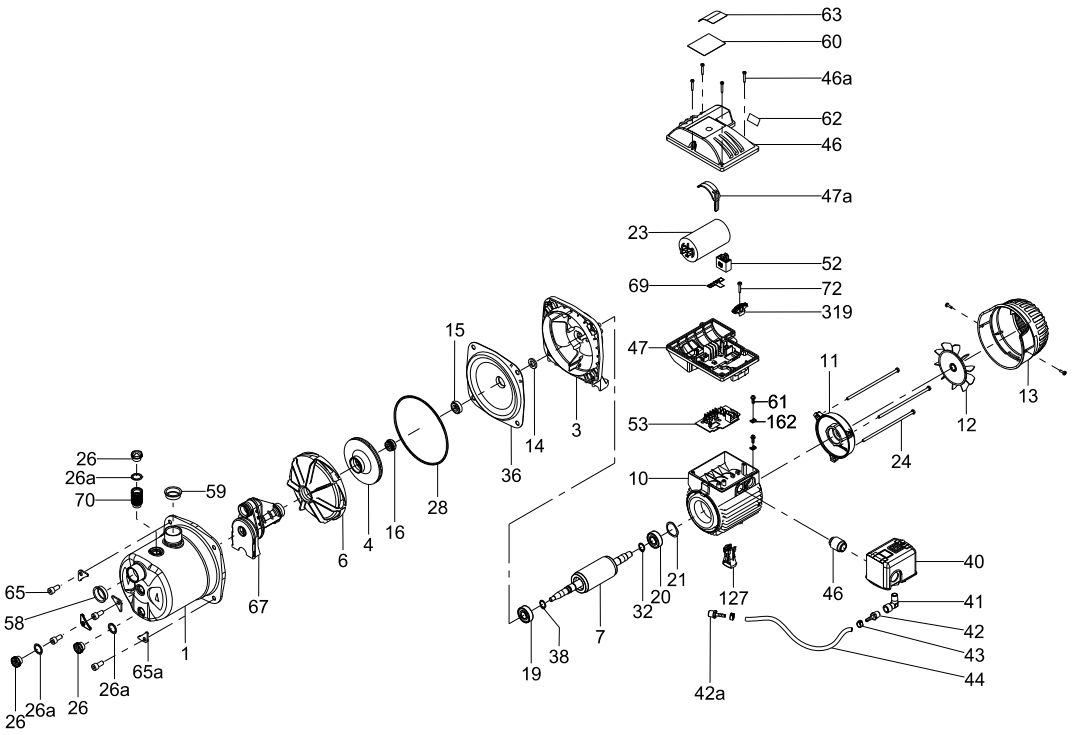

TM062087

JP05S-SS, JP07S-SS, JP10S-SS

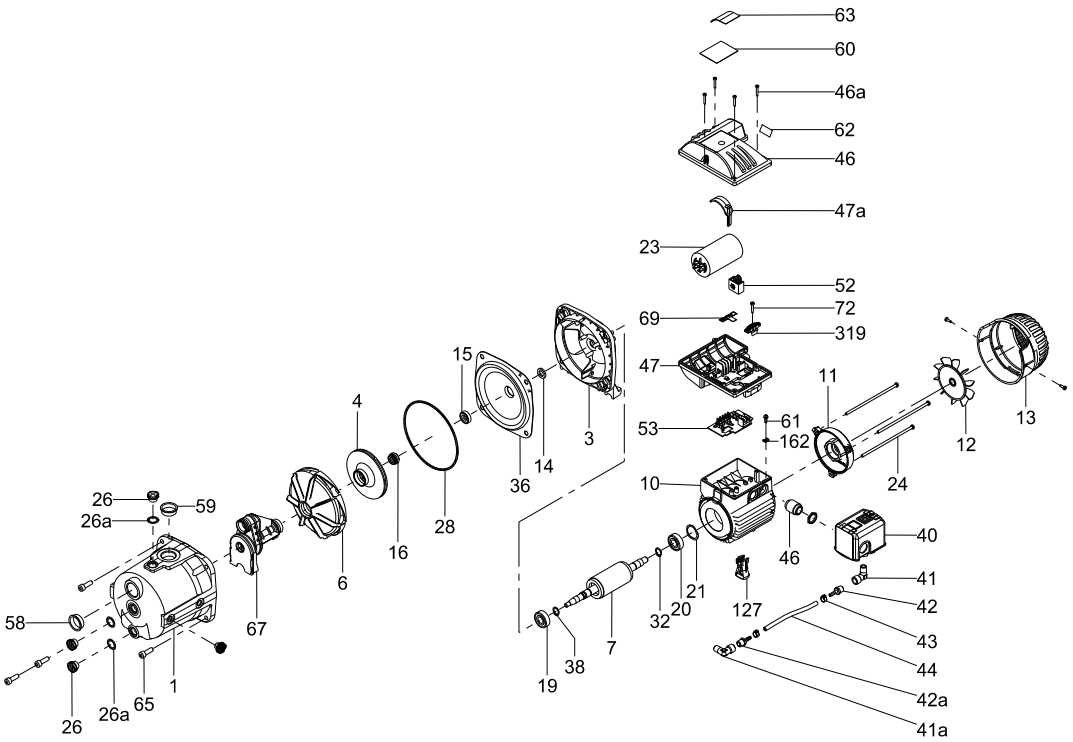

TM062397

JP03S-CI, JP05S-CI, JP07S-CI, JP10S-CI

Hose for pressure switch

Pos.	Pump type	Jet boosters	Jet boosters	Jet boosters
	Model	JP05D-CI, JP03S-CI, JP05S-CI, JP07S-CI-1, JP07D-CI, JP07S-CI, JP10S-CI, JP10S-CI-1	JP05S-SS, JP03S-EC, JP05S-EC, JP07S-EC-1, JP07S-SS-1, JP07S-EC, JP07S-SS, JP10S-EC, JP10S-SS, JP10S-SS-1, JP10S-EC-1	JP15D-CI, JP15S-CI, JP20S-CI-1, JP20D-CI, JP20S-CI, JP30S-CI
	Kit No	*98289897*	*98289931*	*98289935*
43	Clip	2	2	2
41	Fitting 1/4 Gas	1	-	-
41	Fitting 1/4 NPT	1	1	2
41	Fitting 3/8 NPT		1	-
44	Hose 1/4 Gas	1	-	2
44	Hose 1/4 NPT	1	1	2
46	Tube	40 cm	40 cm	40 cm
-	O-ring	-	1	-

Plugs and O-rings

Pos.	Pump type	Jet boosters	Jet boosters
	Model	JP03S-CI, JP03S-EC, JP05D-CI, JP05S-CI, JP05S-EC, JP05S-SS, JP07S-SS-1, JP10S-EC-1, JP07D-CI, JP07S-CI, JP07S-EC, JP07S-SS, JP10S-CI, JP10S-CI-1, JP10S-SS-1	JP15D-CI, JP15S-CI, JP20S-CI-1, JP20D-CI, JP20S-CI, JP30S-CI
	Kit No	*98288867*	*98288904*
26/26a	Plug with O-ring	2	-
26	Plug	-	2
26a	Plug gasket	-	2

T-box cover kit

Pos.	Pump type	Jet boosters	Jet boosters	Jet boosters
	Model	JP05D-CI, JP03S-CI, JP03S-EC, JP05S-CI, JP05S-EC, JP05S-SS, JP07S-CI-1, JP07S-EC-1, JP07S-SS-1	JP07D-CI, JP07S-CI, JP07S-EC, JP07S-SS	JP10S-CI, JP10S-CI-1, JP10S-EC, JP10S-SS, JP10S-SS-1, JP10S-EC-1
	Kit No	*98059738*	*98059736*	*98059737*
61	Screw	1	1	1
46a	Screw	5	5	5
53	PCB	1	1	1
46	Terminal cover	1	1	1
47	Terminal housing	1	1	1
52	Dual voltage block	1	1	1
72	Screw	1	1	1
319	Cable clip	1	1	1
47a	Capacitor Clip	1	1	1
162	Earth cable fasten	1	1	1

Pos.	Pump type	Jet boosters	Jet boosters
	Model	JP15D-CI, JP15S-CI	JP30S-CI, JP20S-CI, JP20D-CI, JP20S-CI-1
	Kit No	*98059739*	*98291516*
46a	Screw	4	8
-	Screw	2	2
-	Screw	3	3
46	Terminal cover	1	1
47	Terminal housing	1	1
22	Terminal housing adap-tor	-	1
61	Screw	1	1
47a	Capacitor Clip	1	1
162	Earth cable fasten	1	1

Jet boosters USA

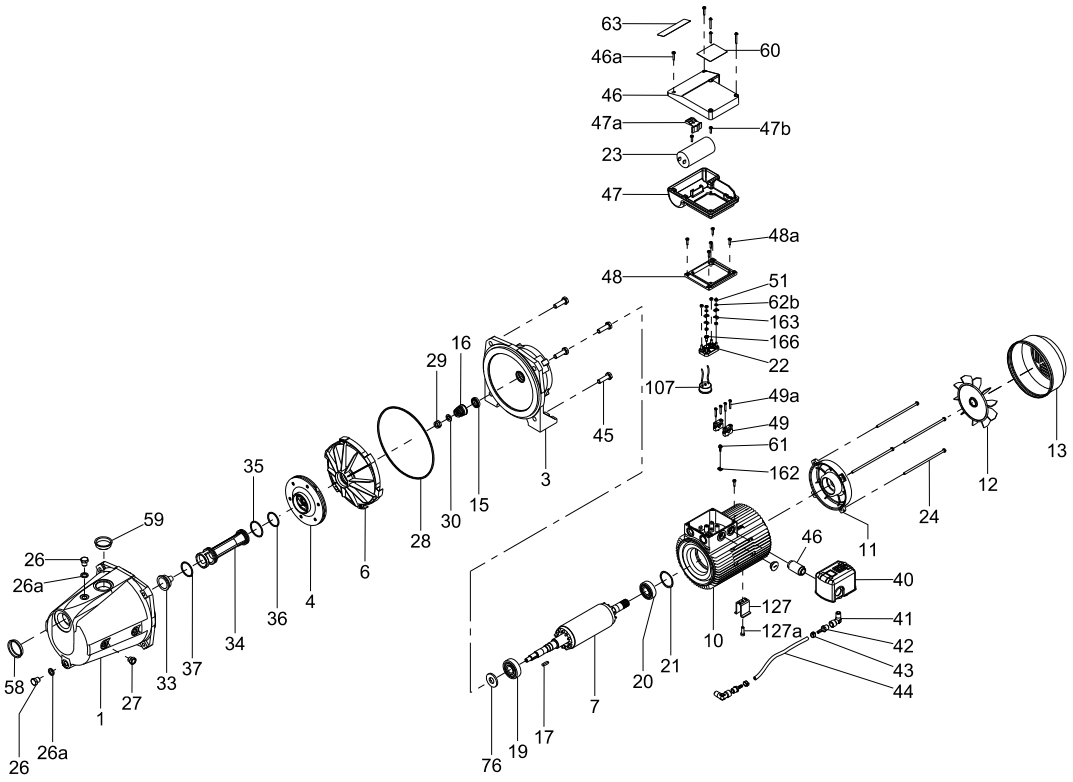

TM062089

JP20S-CI-1, JP30S-CI

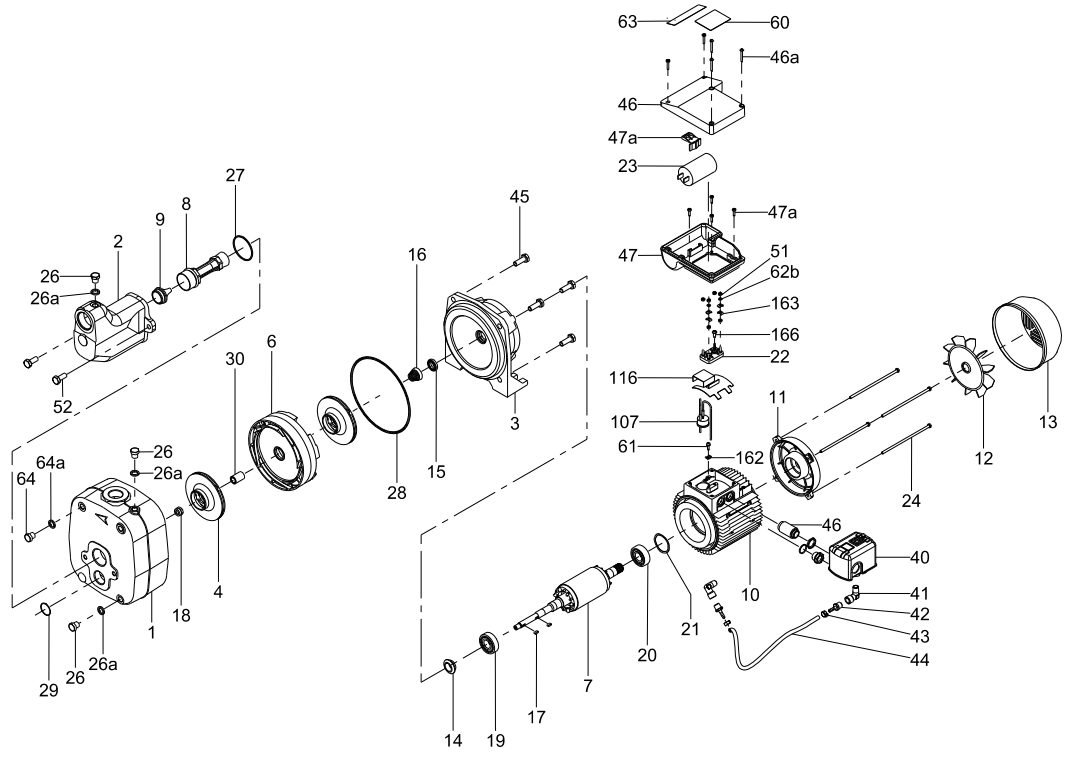

TM062398

JP20S-CI, JP15S-CI

Fan and fan cover kit

Pos.	Pump type	Jet boosters		
	Model	JP05D-CI, JP03S-CI, JP03S-EC, JP05S-CI, JP05S-EC, JP05S-SS, JP07S-CI-1, JP07S-EC-1, JP07S-SS-1	JP07D-CI, JP07S-CI, JP07S-EC, JP07S-SS, JP10S-CI, JP10S-CI-1, JP10S-EC, JP10S-SS, JP10S-SS-1, JP10S-EC-1	JP15S-CI, JP15D-CI, JP20S-CI-1, JP20D-CI, JP20S-CI, JP30S-CI
	Kit No	*98289939*	*98289942*	*98289944*
12	Fan	1	1	1
13	Fan cover	1	1	1

Motor stool kits

Pos.	Pump type	Jet boosters			
	Model	JP03S-CI, JP03S-EC, JP05D-CI, JP05S-CI, JP05S-EC, JP05S-SS, JP07S-CI-1, JP07S-EC-1,JP07S-SS-1	JP07D-CI, JP07S-CI, JP07S-EC, JP07S-SS, JP10S-CI, JP10S-CI-1, JP10S-EC, JP10S-SS, JP10S-SS-1, JP10S-EC-1	JP15D-CI, JP15S-CI, JP20D-CI, JP20S-CI	JP30S-CI, JP20S-CI-1
	Kit No	*98296753*	*98296754*	*98296755*	*98296756*
28	O-ring	1	1	1	1
36	Shaft seal disc	1	1	-	-
16	Shaft seal, stationary part	1	1	1	1
16a	Shaft seal, rotating part	1	1	1	1
3	Motor stool, aluminium	1	1	-	-
3	Motor stool, cast iron	-	-	1	1

Jet boosters USA

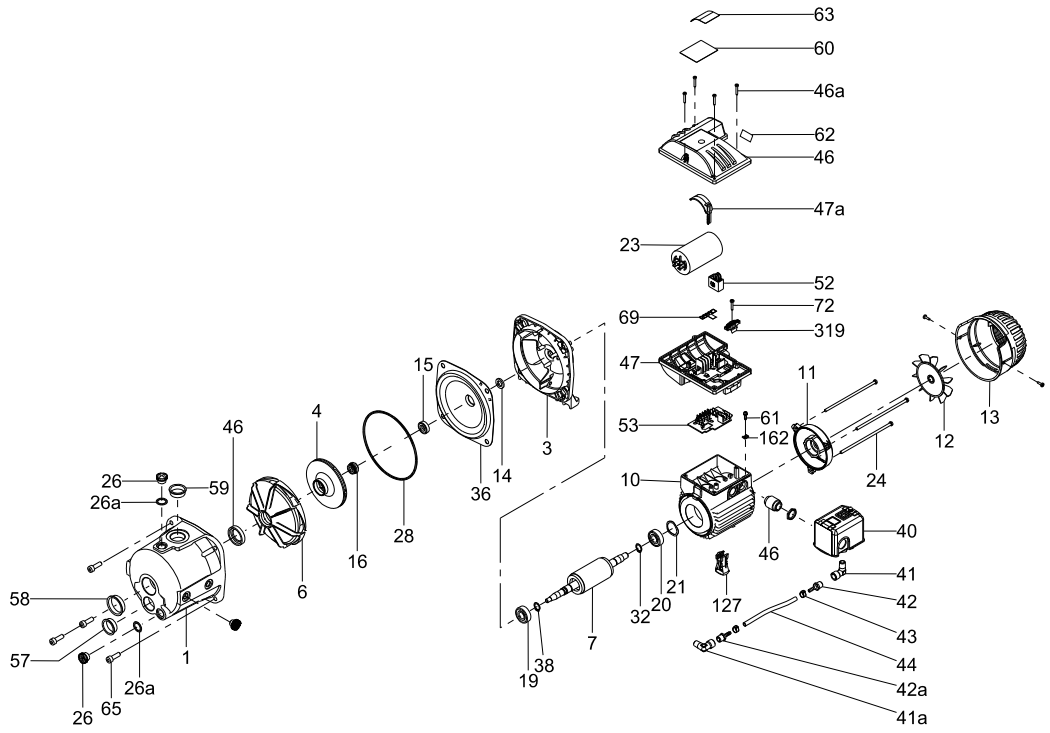

JP15D-CI, JP20D-CI

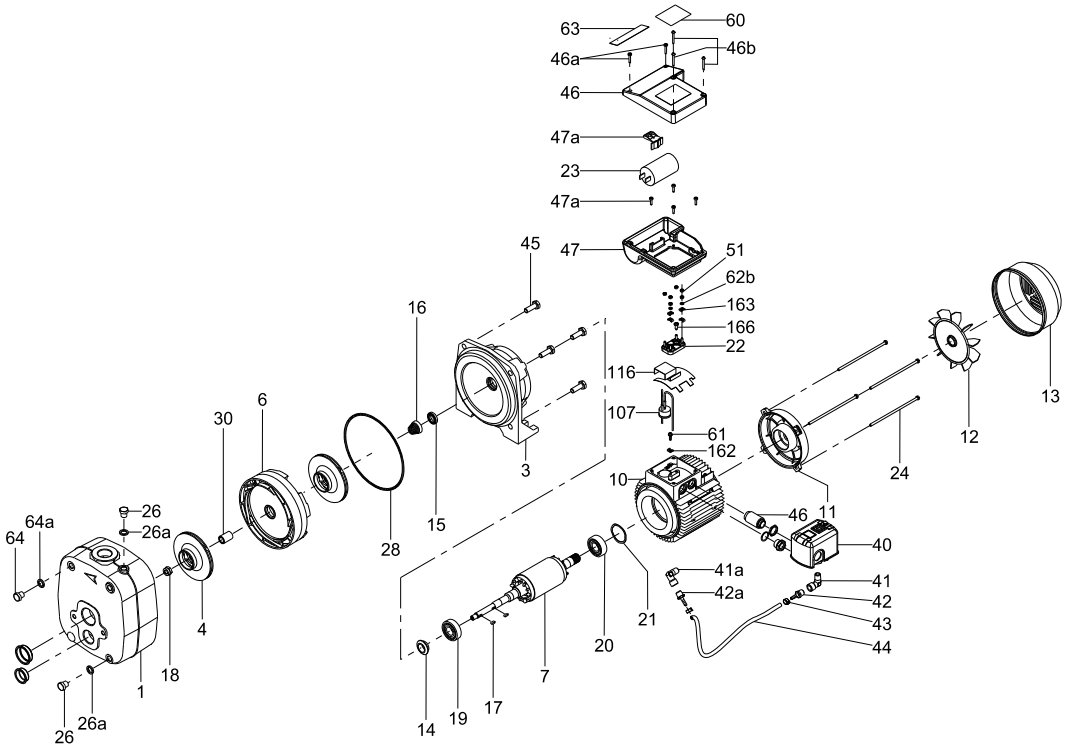

JP05D-CI, JP07D-CI

35. KPC

KPC 24/7, 300A, 600A

50/60 Hz

Cable

Pos.	Description	50/60 Hz			
		KPC 24/7, 300A		KPC 24/7, 300A, 600A	KPC 600A
	Kit No	97825411	98519587	97825435	98519592
	Plug type	Australia	Schuko	Australia	Schuko
181	Cable, 10 m	1	1	1	1
250	Cable entry	1	1	1	1
250a	Cable relief	1	1	1	1
48a	O-ring	1	1	1	1
48b	Cable crimp	3	3	3	3

Capacitor

Pos.	Description	50 Hz	60 Hz	50 Hz	60 Hz
		KPC 24/7, 300A		KPC 600A	
	Kit No	98520308	98520323	98520327	98520328
161	Capacitor	1	1	1	1
48b	Cable crimp	4	4	4	4

Fitting (Outlet)

Pos.	Description	50/60 Hz
		KPC 24/7, 300A, 600A
	Kit No	98520441
149b	Fitting 1 1/4"	1

Float switch

Pos.	Pump type	KPC
	Frequency	50/60 Hz
	Kit No	96578970
182	Float switch	1
250	Cable entry	1
250a	Cable relief	1
48a	O-ring	1
48b	Cable crimp	4

Impeller

Pos.	Description	50 Hz		60 Hz	
		KPC 24/7, 300A	KPC 600A	KPC 24/7, 300A	KPC 600A
	Kit No	98520216	98520232	98520220	98520234
49	Impeller	1	1	1	1
67	Nut	1	1	1	1
66	Wear ring disc	1	1	1	1

Strainer

Pos.	Description	50/60 Hz		
		KPC 24/7	KPC 300A	KPC 600A
	Kit No	98520428	98520425	98520420
84	Strainer	1	1	1

KPC 300A

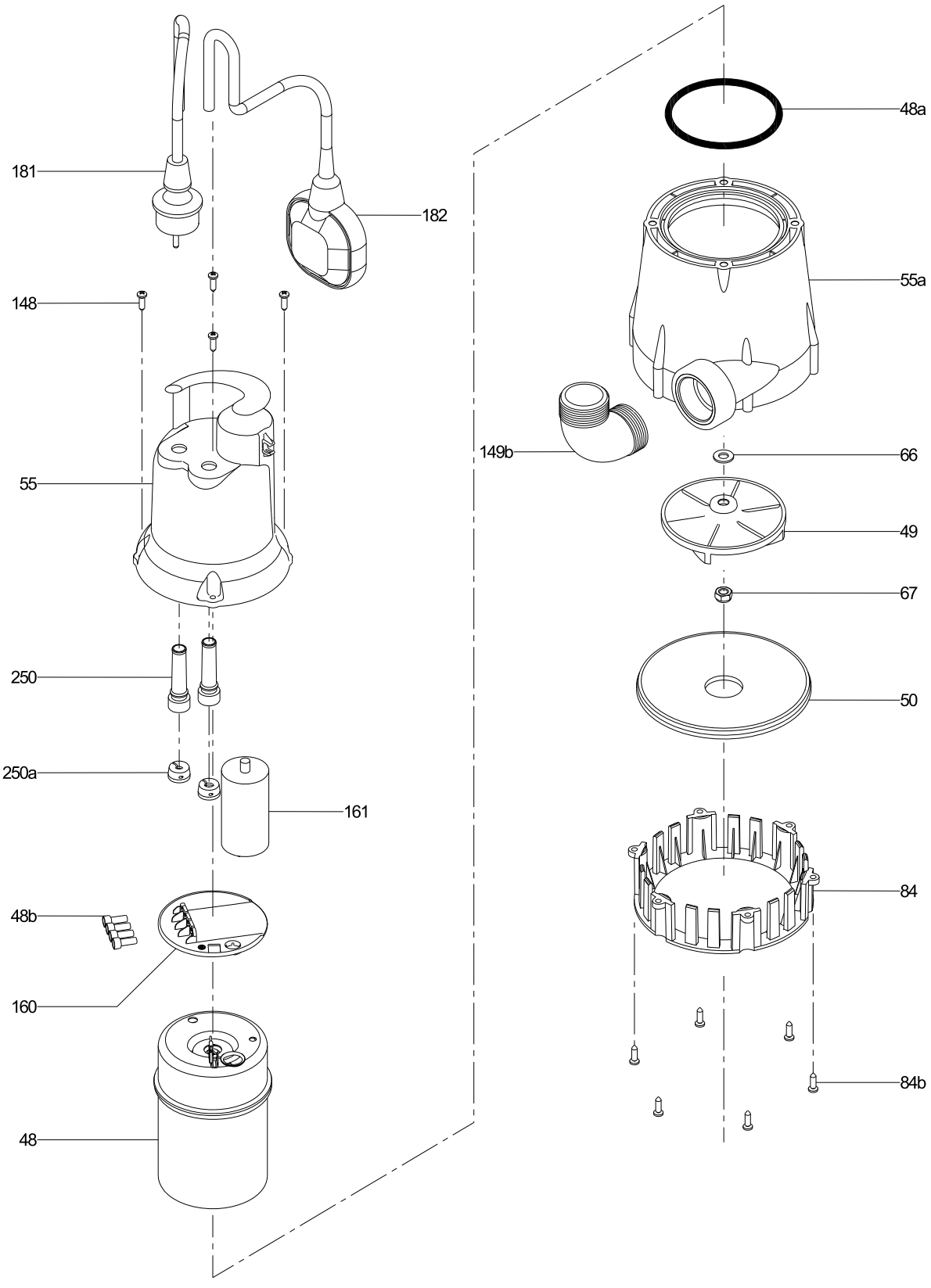
181
182
148
55
250
250a
161
48b
160
48
48a
55a
149b
66
49
67
50
84
84b
TM059721

KPC 600A

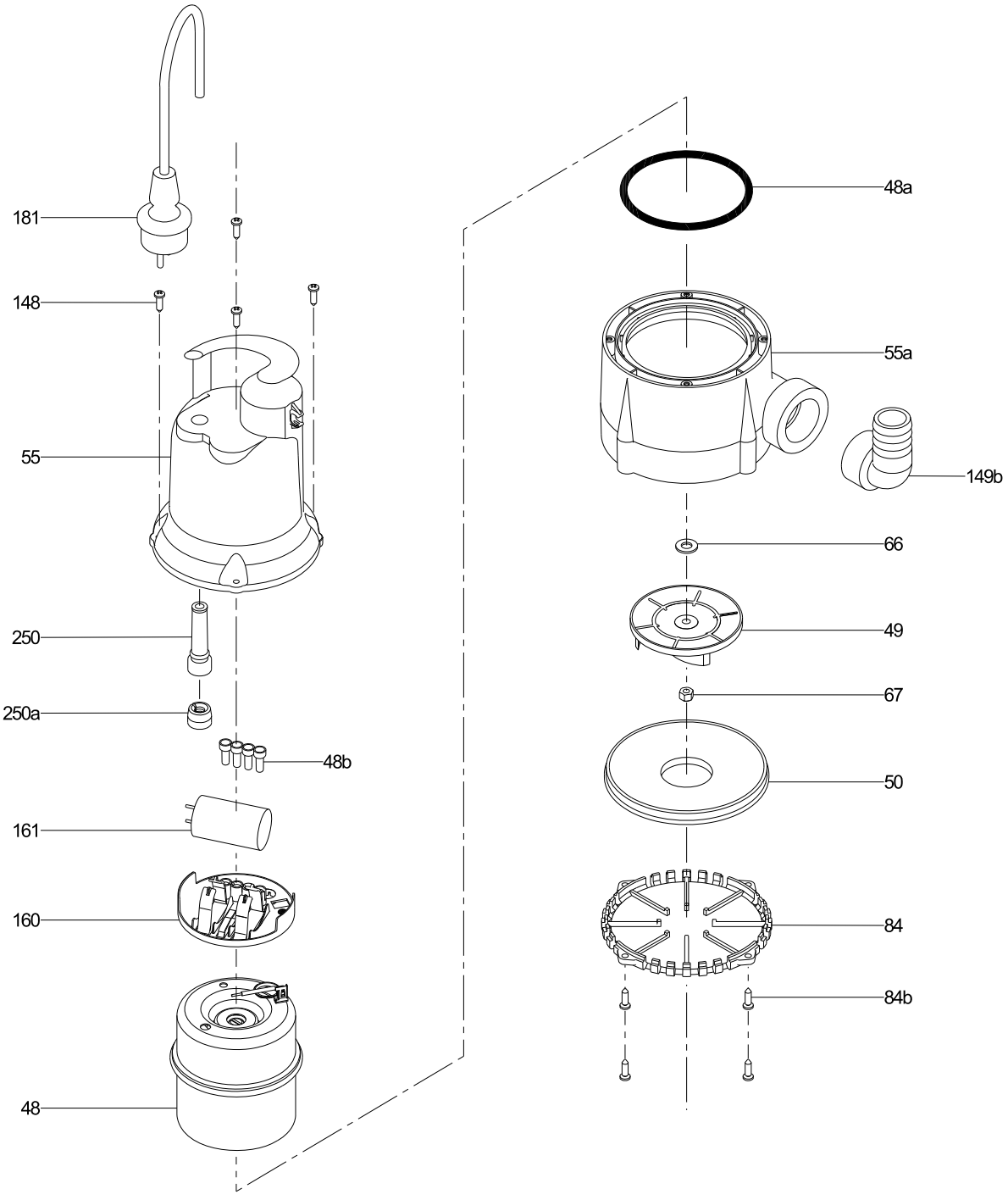
181
148
55
250
250a
48b
161
160
48
48a
55a
149b
66
49
67
50
84
84b
TM059720

KPC 24/7

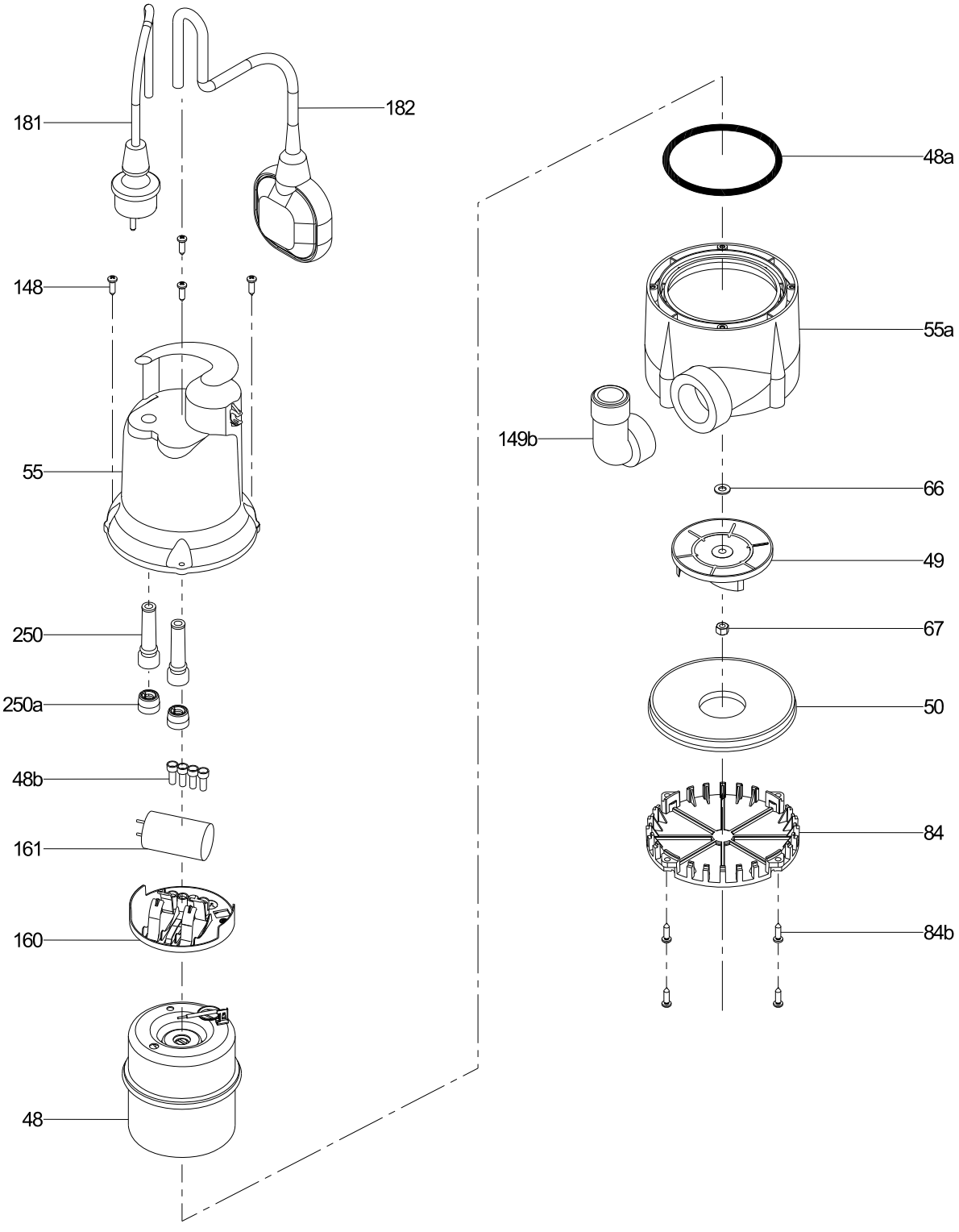
181
182
148
55
250
250a
48b
161
160
48
48a
55a
149b
66
49
67
50
84
84b
TM059719

36. KPL KWM

50/60 Hz

KPL 500

Cable

Without cable bush

Pos.	Description	Cable diameter	Voltage	Length		
				10 m	15 m	20 m
181	3 x 10 + 1 x 6 + 4 x 1.5 mm^2	22	0.6/1 kV	*98843203*	*98843225*	*98843247*
	3 x 16 + 1 x 10 + 4 x 1.5 mm^2	26	0.6/1 kV	*98843204*	*98843226*	*98843248*
	3 x 25 + 1 x 16 + 4 x 1.5 mm^2	32	0.6/1 kV	*98843205*	*98843227*	*98843249*
	6 x 6 + 1 x 4 + 6 x 1.5 mm^2	24	0.6/1 kV	*98843188*	*98843220*	*98843242*
	6 x 10 + 1 x 6 + 6 x 1.5 mm^2	34	0.6/1 kV	*98843189*	*98843221*	*98843243*
	6 x 16 + 1 x 10 + 6 x 1.5 mm^2	34	0.6/1 kV	*98843190*	*98843222*	*98843244*

Cable bush

Pos.	Cable diameter	22	24	26	32	34
	Description/Kit No	*98843264*	*98843265*	*98843266*	*98843267*	*98843268*
198	Rubber seal	2	2	2	2	2
	Washer	2	2	2	2	2

Bearing

Pos.	Range	Poles	Power	
		4	11~15 kW	19~22 kW
		6	11 kW	15 kW
	Description/Kit No		*98843460*	*98843461*
153	Lower bearing		1	1
	Lower bearing 2nd		1	1
154	Upper bearing		1	1
154a	Sleeve		1	1
154b	Lip seal		1	1
187	Circlip		1	1
-	Set screw		2	2

Cartridge Shaft seal kit

Pos.	Description/Kit No	*98843288*
77a	Circlip (R-105)	1
105	Mechanical seal unit	1
-	Cartridge unit	1

Outlet casing protector

Pos.	Description/Kit No	*98843334*
117c	Outlet casing protector	5
117d	Socket screw	5

O-ring for oil plugs

Pos.	Description/Kit No		*98843382*
195a	O-ring	2.4 x 14.0	1

Power Lock

Pos.	Description/Kit No	*98843304*
118	Power Lock	1

Sensor Cable bush

Pos.	Description/Kit No	*98843287*
250b	Rubber seal	2
	Washer	2

Turbulence Optimizer

Pos.	Description/Kit No	*98843322*
117a	Turbulence Optimizer	1
117b	Socket screw	10
	Washer	20

Wear ring

Pos.	Description/Kit No	*98843354*
46	Wear ring	1
46a	Screw	4

O-ring

Pos.	Range		Poles	Power	
			4	11~15 kW	19~22 kW
			6	11 kW	15 kW
	Description/Kit No			*98843386*	*98843387*
49a	O-ring	3.1 x 45.0		1	1
66b	O-ring	3.1 x 50.0		1	1
67b	O-ring	2.4 x 22.0		1	1
72	O-ring	5.7 x 220.0		1	1
72a	O-ring	5.7 x 203.0		1	1
104a	O-ring	3.1 x 45.0		1	1
105b	O-ring	3.5 x 55.0		1	1
105c	O-ring	3.5 x 99.0		1	1
106a	O-ring	3.5 x 32.0		1	1
154b	Lip seal	TC-709513		1	1
157	O-ring	5.7 x 250.0		1	-
		5.7 x 275.0		-	1

Pos.	Range	Poles	Power	
		4	11~15 kW	19~22 kW
		6	11 kW	15 kW
	Description/Kit No		*98843386*	*98843387*
157a	O-ring	5.7 x 265.0	1	
		5.7 x 302.0	-	1
157e	O-ring	3.5 x 70.0	1	-
		3.5 x 80.0	-	1
157d	O-ring	3.5 x 70.0	1	-
		3.5 x 80.0	-	1
194	O-ring	2.4 x 14.0	2	2
488	O-ring	8.4 x 345.0	1	1

Sensor Cable

Without cable bush

Pos.	Description	Cable diameter	Length		
			10 m	15 m	20 m
252	8 x 2.5 mm^2	23	*98843218*	*98843240*	*98843262*
	11 x 2.5 mm^2	23	*98843219*	*98843241*	*98843263*

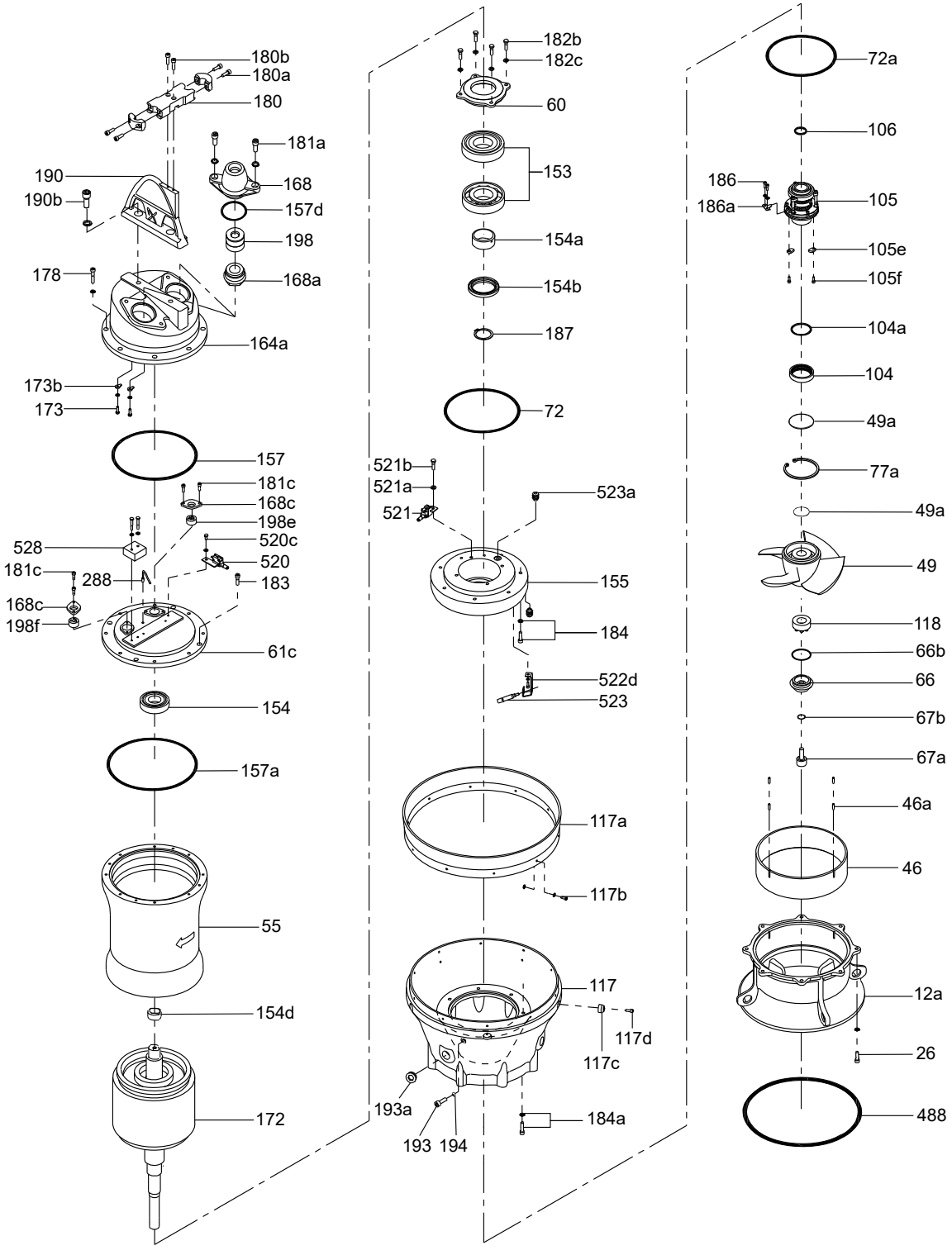
180b
180a
180
181a
190
168
190b
157d
198
178
168a
164a
173b
173
157
181c
168c
198e
528
520c
181c
288
520
183
168c
198f
61c
154
157a
55
154d
172
182b
182c
60
153
154a
154b
187
72
521b
521a
521
523a
155
184
522d
523
117a
117b
117
117d
117c
193a
193
194
184a
72a
106
186
186a
105
105e
105f
104a
104
49a
77a
49a
49
118
66b
66
67b
67a
46a
46
12a
26
488
TM060241

KPL 600

Cable

Without cable bush

Pos.	Description	Cable diameter	Voltage	Length		
				10 m	15 m	20 m
181	3 x 16 + 1 x 10 + 4 x 1.5 mm^2	26	0.6/1 kV	*98843204*	*98843226*	*98843248*
	3 x 25 + 1 x 16 + 4 x 1.5 mm^2	32	0.6/1 kV	*98843205*	*98843227*	*98843249*
	6 x 10 + 1 x 6 + 6 x 1.5 mm^2	34	0.6/1 kV	*98843189*	*98843221*	*98843243*
	6 x 16 + 1 x 10 + 6 x 1.5 mm^2	34	0.6/1 kV	*98843190*	*98843222*	*98843244*

Bearing

Pos.	Range	Poles	Power
		6	19~22 kW
		8	15~19 kW
	Description/Kit No		*98843462*
153	Lower bearing		1
	Lower bearing 2nd		1
154	Upper bearing		1
154a	Sleeve		1
154b	Lip seal		1
187	Circlip		1
-	Set screw		2

Cable bush

Pos.	Cable diameter	26	32	34
	Description/Kit No	*98843266*	*98843267*	*98843268*
198	Rubber seal	2	2	2
	Washer	2	2	2

Cartridge Shaft seal kit

Pos.	Description/Kit No	*98843289*
105	Mechanical seal unit	1
-	Cartridge unit	1

Outlet casing protector

Pos.	Description/Kit No	*98843335*
117c	Outlet casing protector	5
117d	Socket screw	5

O-ring

Pos.	Range	Poles	Power
		6	19~22 kW
		8	15~19 kW
	Description/Kit No		*98843388*
49a	O-ring	3.1 x 50.0	1
66b	O-ring	3.1 x 60.0	1
67b	O-ring	2.4 x 22.0	1
72	O-ring	5.7 x 250.0	1
72a	O-ring	5.7 x 240.0	1
104a	O-ring	3.1 x 50.0	1
105b	O-ring	3.5 x 75.0	1
105c	O-ring	3.5 x 124.0	1
106a	O-ring	3.5 x 37.0	1

Pos.	Range	Poles	Power
		6	19~22 kW
		8	15~19 kW
	Description/Kit No		*98843388*
154b	Lip seal	TC-709513	1
157	O-ring	5.7 x 275.0	1
157a	O-ring	5.7 x 307.0	1
157d	O-ring	3.5 x 80.0	1
157e	O-ring	3.5 x 80.0	1
194	O-ring	2.4 x 14.0	2
488	O-ring	8.4 x 470.0	1

O-ring for oil plugs

Pos.	Description/Kit No		*98843382*
194	O-ring	2.4 x 14.0	2

Power Lock

Pos.	Description/Kit No	*98843305*
118	Power Lock	1

Sensor Cable bush

Pos.	Description/Kit No	*98843287*
250b	Rubber seal	2
	Washer	2

Turbulence Optimizer

Pos.	Description/Kit No	*98843287*
250b	Rubber seal	2
	Washer	2

Wear ring

Pos.	Description/Kit No	50 Hz	60 Hz
		98843355	*98843356*
46	Wear ring	1	1
46a	Screw	4	4

Sensor Cable

Without cable bush

Pos.	Description	Cable diameter	Length		
			10 m	15 m	20 m
252	8 x 2.5 mm^2	23	*98843218*	*98843240*	*98843262*
	11 x 2.5 mm^2	23	*98843219*	*98843241*	*98843263*

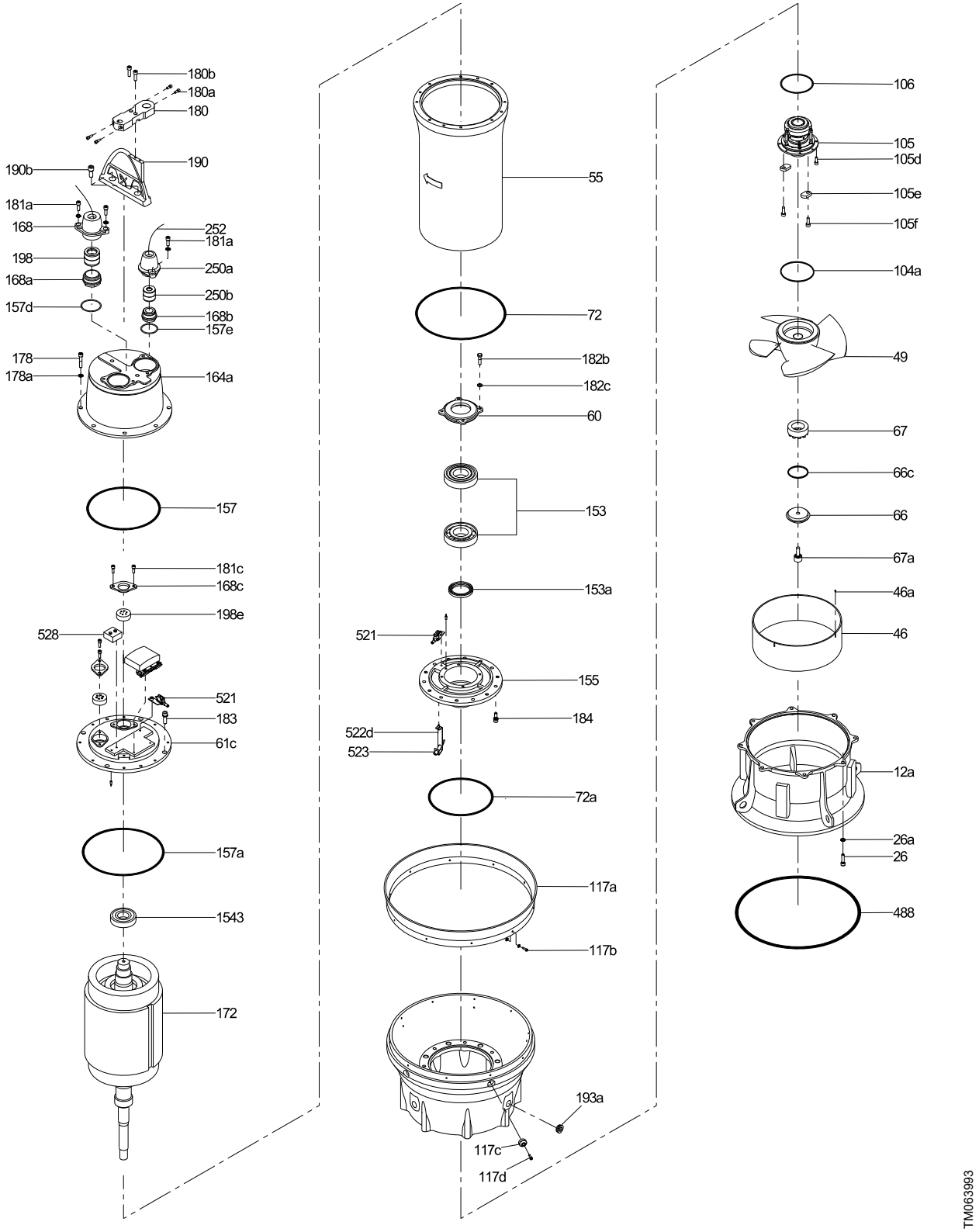
180b
180a
180
190b
190
181a
168
252
181a
198
250a
168a
250b
157d
168b
157e
178
178a
164a
157
181c
168c
198e
528
521
183
61c
157a
1543
172
55
72
182b
182c
60
153
153a
521
155
184
522d
523
72a
117a
117b
193a
117c
117d
106
105
105d
105e
105f
104a
49
67
66c
66
67a
46a
46
12a
26a
26
488
TM063993

KPL 650

Cable

Without cable bush

Pos.	Description	Cable diameter	Voltage	Length		
				10 m	15 m	20 m
181	3 x 25 + 1 x 16 + 4 x 1.5 mm^2	32	0.6/1 kV	*98843205*	*98843227*	*98843249*
	3 x 35 + 1 x 25 + 4 x 1.5 mm^2	32	0.6/1 kV	*98843206*	*98843228*	*98843250*
	3 x 50 + 1 x 35 + 4 x 1.5 mm^2	45	0.6/1 kV	*98843207*	*98843229*	*98843251*
	6 x 16 + 1 x 10 + 6 x 1.5 mm^2	34	0.6/1 kV	*98843190*	*98843222*	*98843244*
	6 x 25 + 1 x 16 + 6 x 1.5 mm^2	42	0.6/1 kV	*98843201*	*98843223*	*98843245*

Cable bush

Pos.	Cable diameter	32	34	42	45
	Description/Kit No	*98843271*	*98843272*	*98843273*	*98843274*
198	Rubber seal	2	2	2	2
	Washer	2	2	2	2

Bearing

Pos.	Range	Poles	Power
		6	30~37 kW
	Description/Kit No		*98843463*
153	Lower bearing		1
	Lower bearing 2nd		1
154	Upper bearing		1
154a	Sleeve		1
154b	Lip seal		1
187	Circlip		1
-	Set screw		2

Cartridge Shaft seal kit

Pos.	Description/Kit No	*98843290*
105	Mechanical seal unit	1
-	Cartridge unit	1

Outlet casing protector

Pos.	Description/Kit No	*98843336*
117c	Outlet casing protector	5
117d	Socket screw	5

O-ring

Pos.	Range	Poles	Power
		6	30~37 kW
	Description/Kit No		*98843389*
49a	O-ring	3.5 x 60.0	1
66b	O-ring	3.1 x 60.0	1
67b	O-ring	2.4 x 22.0	1
72	O-ring	5.7 x 340.0	1
72a	O-ring	5.7 x 320.0	1
104a	O-ring	3.5 x 60.0	1
105b	O-ring	3.5 x 75.0	1
105c	O-ring	3.5 x 124.0	1
106a	O-ring	3.5 x 45.0	1
154b	Lip seal	TC-9012012	1
157	O-ring	5.7 x 363.0	1
157a	O-ring	5.7 x 384.0	1
157d	O-ring	3.5 x 85.0	1
157e	O-ring	3.5 x 70.0	1
165	O-ring	5.7 x 220.0	1
194	O-ring	3.1 x 16.0	1
195a	O-ring	3.1 x 16.0	1
488	O-ring	8.4 x 470.0	1

O-ring for oil plugs

Pos.	Description/Kit No		*98843383*
194	O-ring	3.1 x 16.0	1
195a	O-ring	3.1 x 16.0	1

Power Lock

Pos.	Description/Kit No	*98843306*
118	Power Lock	1

Sensor Cable bush

Pos.	Description/Kit No	*98843287*
250b	Rubber seal	2
	Washer	2

Turbulence Optimizer

Pos.	Description/Kit No	*98843324*
117a	Turbulence Optimizer	1
117b	Socket screw	10
	Washer	20

Wear ring

Pos.	Description/Kit No	*98843357*
46	Wear ring	1
46a	Screw	4

Sensor Cable

Without cable bush

Pos.	Description	Cable diameter	Length		
			10 m	15 m	20 m
252	8 x 2.5 mm^2	23	*98843218*	*98843240*	*98843262*
	11 x 2.5 mm^2	23	*98843219*	*98843241*	*98843263*

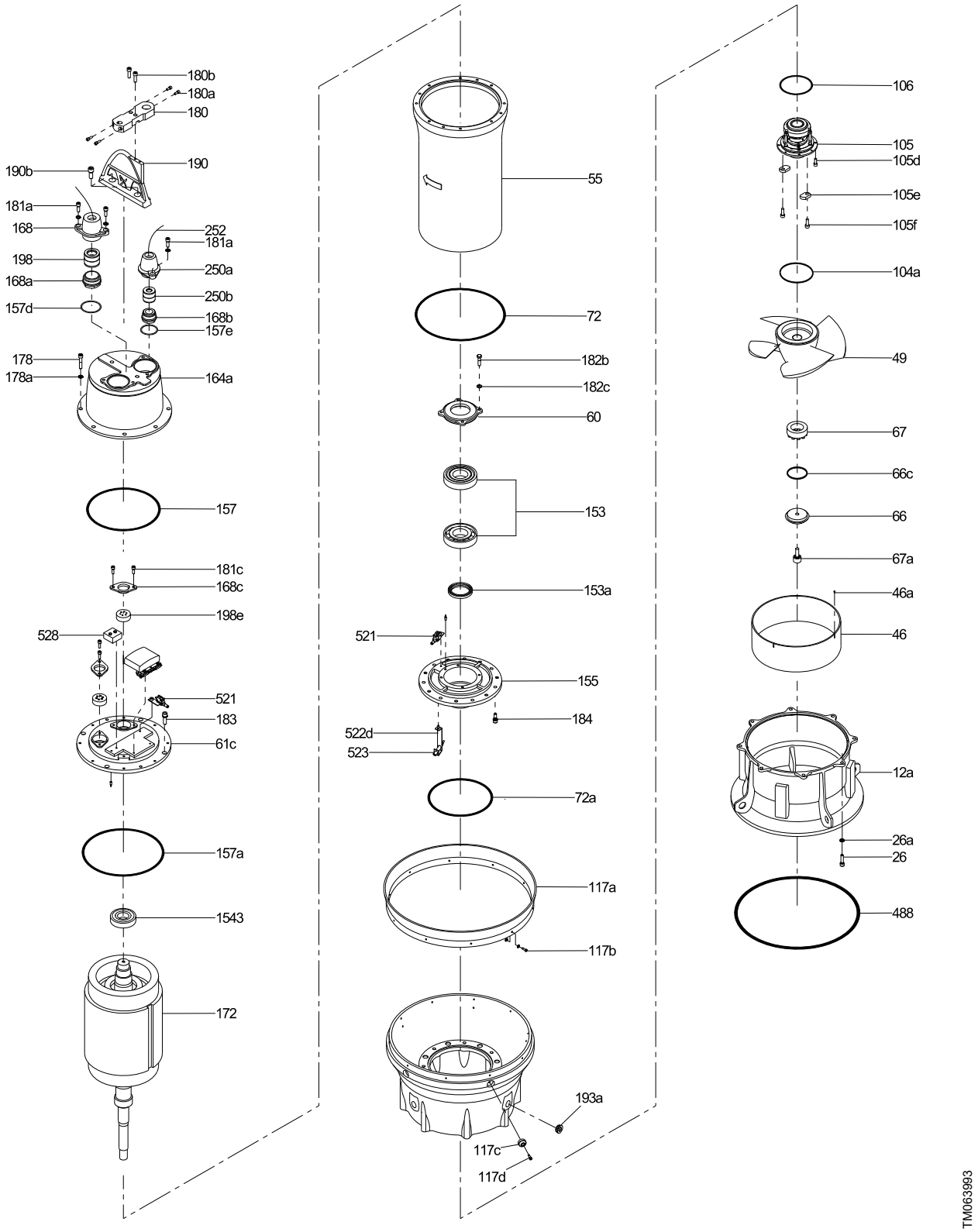
180b
180a
180
190b
190
181a
168
252
181a
198
250a
168a
250b
157d
168b
157e
178
178a
164a
157
181c
168c
198e
528
521
183
61c
157a
1543
172
55
72
182b
182c
60
153
153a
521
155
184
522d
523
72a
117a
117b
193a
117c
117d
106
105
105d
105e
105f
104a
49
67
66c
66
67a
46a
46
12a
26a
26
488

TM063993

KPL 700

Cable

Without cable bush

Pos.	Description	Cable diameter	Voltage	Length		
				10 m	15 m	20 m
181	3 x 25 + 1 x 16 + 4 x 1.5 mm^2	32	0.6/1 kV	*98843205*	*98843227*	*98843249*
	3 x 35 + 1 x 25 + 4 x 1.5 mm^2	32	0.6/1 kV	*98843206*	*98843228*	*98843250*
	3 x 50 + 1 x 35 + 4 x 1.5 mm^2	45	0.6/1 kV	*98843207*	*98843229*	*98843251*
	4 x 70 mm^2	50	0.6/1 kV	*98843208*	*98843230*	*98843252*
	6 x 16 + 1 x 10 + 6 x 1.5 mm^2	34	0.6/1 kV	*98843190*	*98843222*	*98843244*
	6 x 25 + 1 x 16 + 6 x 1.5 mm^2	42	0.6/1 kV	*98843201*	*98843223*	*98843245*
	6 x 35 + 1 x 25 + 6 x 1.5 mm^2	45	0.6/1 kV	*98843202*	*98843224*	*98843246*

Cable bush

Pos.	Cable diameter	32	34	42	45	50
	Description/Kit No	*98843271*	*98843272*	*98843273*	*98843274*	*98843275*
198	Rubber seal	2	2	2	2	2
	Washer	2	2	2	2	2

Cartridge Shaft seal kit

Pos.	Range	Poles	Power	
		6	55 kW	75~110 kW
		8	22~55 kW	75 kW
		10	19~37 kW	
	Description/Kit No		*98843292*	*98843293*
105	Mechanical seal unit		1	1
-	Cartridge unit		1	1

Outlet casing protector

Pos.	Description/Kit No	*98843337*
117c	Outlet casing protector	5
117d	Socket screw	5

Non return valve

Pos.	Description/Kit No	*98843385*
196	Non return valve	1
	Nipple	1

O-ring for oil plugs

Pos.	Description/Kit No		*98843384*
194	O-ring	3.1 x 16.0	1
195a	O-ring	3.1 x 22.0	1

Power Lock

Pos.	Range	Poles	Power	
		6	55 kW	75~110 kW
		8	22~55 kW	75 kW
		10	19~37 kW	
	Description/Kit No		*98843307*	*98843308*
118	Power Lock		1	1

Sensor Cable bush

Pos.	Description/Kit No	*98843287*
250b	Rubber seal	2
	Washer	2

Turbulence Optimizer

Pos.	Description/Kit No	*98843325*
117a	Turbulence Optimizer	1
117b	Socket screw	10
	Washer	20

Wear ring

Pos.	Description/Kit No	*98843358*
46	Wear ring	1
46a	Screw	4

Bearing

Pos.	Range	Poles	Power		
		6	55 kW		75~110 kW
		8	22~37 kW	45~55 kW	75 kW
		10	19~30 kW	37 kW	
	Description/Kit No		*98843464*	*98843465*	*98843466*
153	Lower bearing		1	1	1
	Lower bearing 2nd		1	1	1
154	Upper bearing		1	1	1
154a	Sleeve		1	1	1
154b	Lip seal		1	1	1
187	Circlip		1	1	1
-	Set screw		2	2	2

Sensor Cable

Without cable bush

Pos.	Description	Cable diameter	Length		
			10 m	15 m	20 m
252	8 x 2.5 mm^2	23	*98843218*	*98843240*	*98843262*
	11 x 2.5 mm^2	23	*98843219*	*98843241*	*98843263*

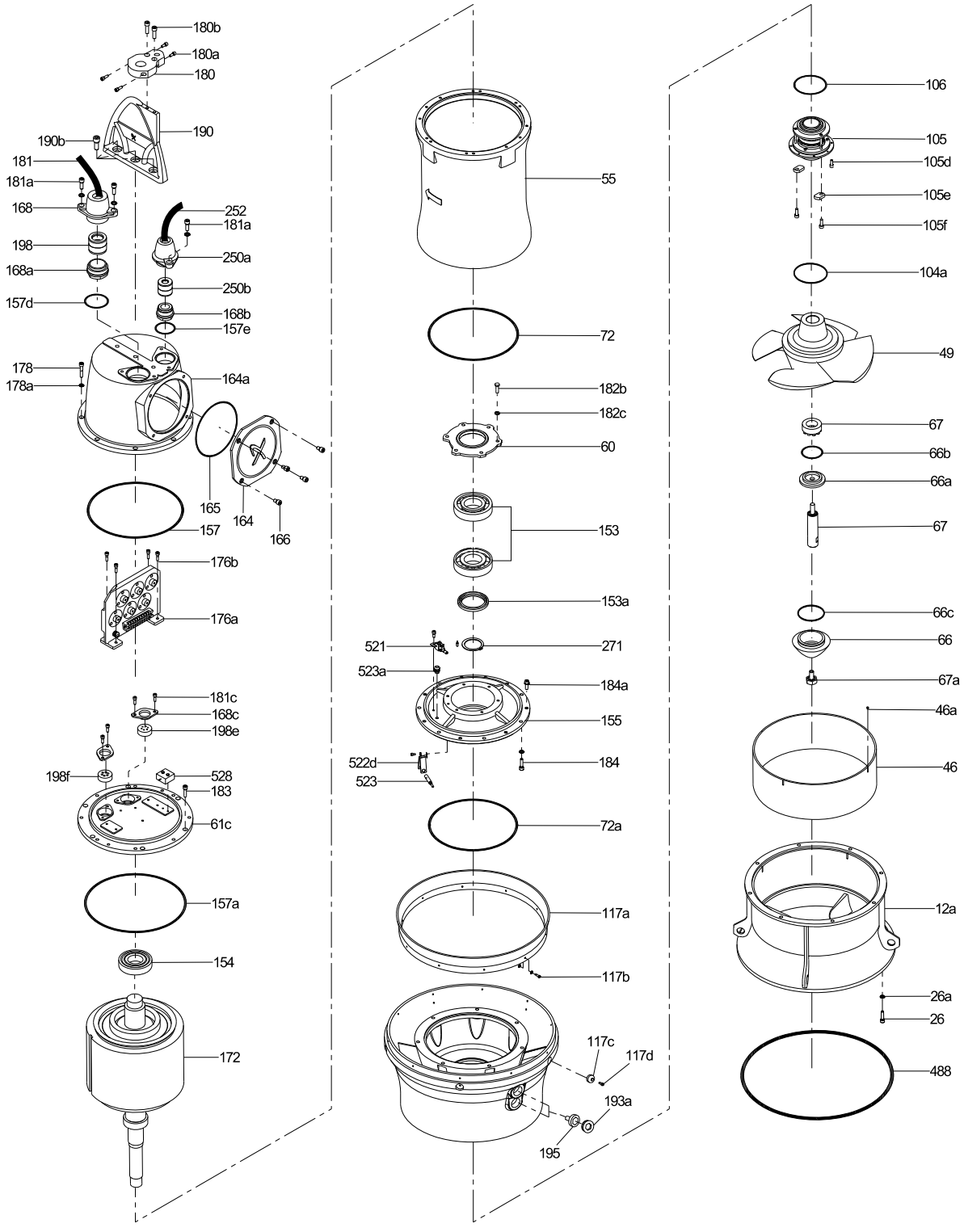
180b
180a
180
190
190b
181
181a
168
252
181a
198
250a
168a
250b
157d
168b
157e
178
178a
164a
165
164
166
157
176b
176a
181c
168c
198e
198f
528
183
61c
157a
154
172
55
72
182b
182c
60
153
153a
521
271
523a
184a
155
522d
523
184
72a
117a
117b
117c
117d
193a
195
106
105
105d
105e
105f
104a
49
67
66b
66a
67
66c
66
67a
46a
46
12a
26a
26
488
TM063994

O-ring

Pos.	Range	Poles	Power		
		6	55 kW		75~110 kW
		8	22~37 kW	45~55 kW	75 kW
		10	19~30 kW	37 kW	
	Description/Kit No		*98843390*	*98843391*	*98843392*
49a	O-ring	3.5 x 70.0	1	1	-
		3.5 x 80.0	-	-	1
66b	O-ring	3.5 x 90.0	1	1	1
66c	O-ring	3.5 x 102.0	1	1	1
67b	O-ring	2.4 x 22.0	1	1	1
67c	O-ring	3.1 x 30.0	1	1	1
72	O-ring	5.7 x 370.0	1	1	1
72a	O-ring	5.7 x 355.0	1	1	1
104a	O-ring	3.5 x 70.0	1	1	-
		3.5 x 80.0	-	-	1
105b	O-ring	3.5 x 85.0	1	1	-
		3.5 x 100.0	-	-	1
105c	O-ring	3.5 x 139.0	1	1	-
		5.7 x 150.0	-	-	1
106a	O-ring	3.5 x 55.0	1	1	-
		3.5 x 65.0	-	-	1
154b	Lip seal	TC-9512013	1	1	-
		TC-10513514	-	-	1
157	O-ring	5.7 x 363.0	1	1	1
157a	O-ring	5.7 x 384.0	1	-	-
		5.7 x 414.0	-	1	1
157d	O-ring	3.5 x 85.0	1	1	1
157e	O-ring	3.5 x 70.0	1	1	1
165	O-ring	5.7 x 220.0	1	1	1
194	O-ring	3.1 x 16.0	1	1	1
195a	O-ring	3.1 x 22.0	1	1	1
488	O-ring	12.0 x 570.0	1	1	1

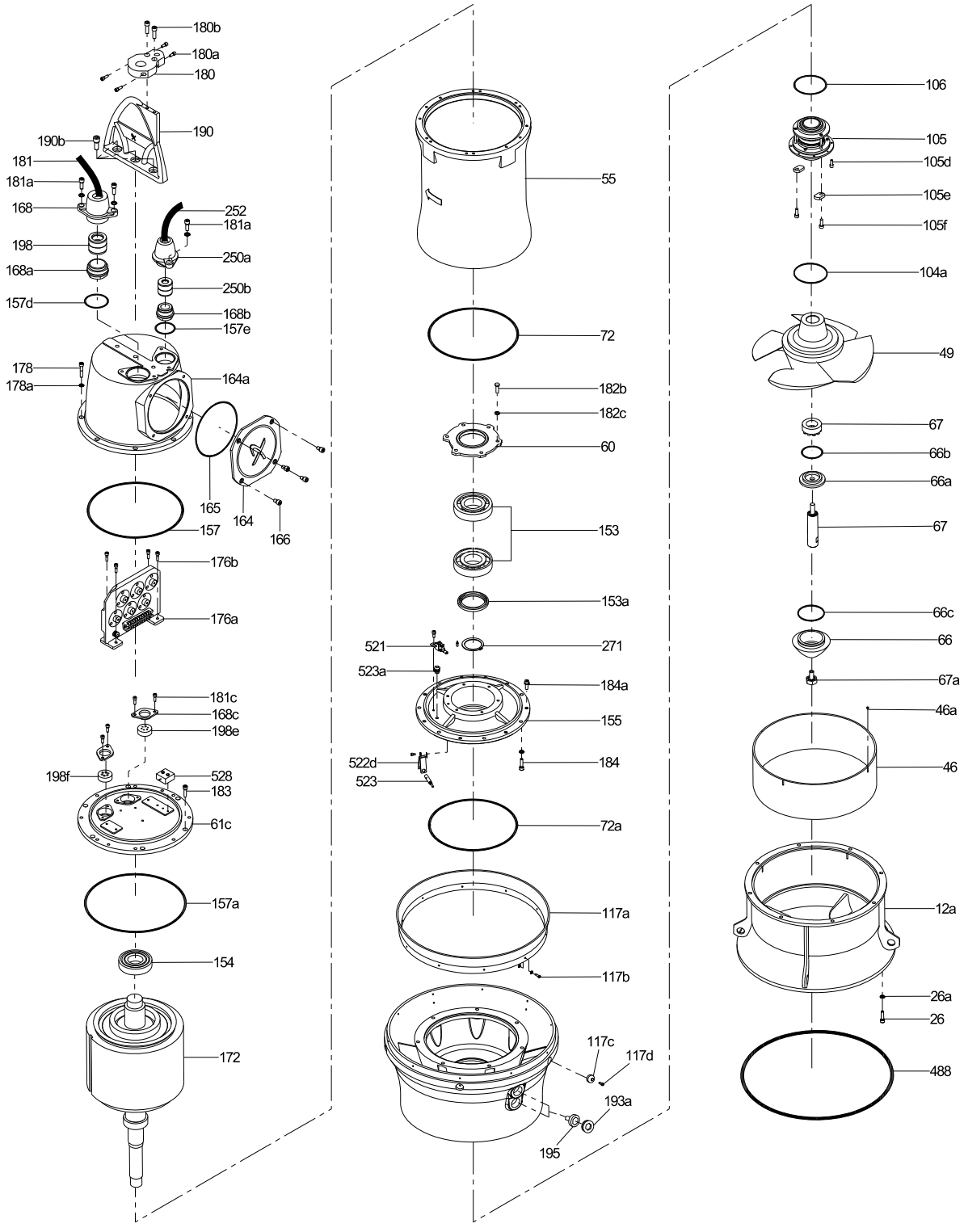
180b
180a
180
190
190b
181
181a
168
252
181a
198
250a
168a
250b
157d
168b
157e
178
178a
164a
165
164
166
157
176b
176a
181c
168c
198e
198f
528
183
61c
157a
154
172
55
72
182b
182c
60
153
153a
521
271
523a
184a
155
522d
523
184
72a
117a
117b
117c
117d
193a
195
106
105
105d
105e
105f
104a
49
67
66b
66a
67
66c
66
67a
46a
46
12a
26a
26
488
TM063994

KPL 800

Cable

Without cable bush

Pos.	Description	Cable diameter	Voltage	Length		
				10 m	15 m	20 m
181	3 x 25 + 1 x 16 + 4 x 1.5 mm^2	32	0.6/1 kV	*98843205*	*98843227*	*98843249*
	3 x 35 + 1 x 25 + 4 x 1.5 mm^2	32	0.6/1 kV	*98843206*	*98843228*	*98843250*
	3 x 50 + 1 x 35 + 4 x 1.5 mm^2	45	0.6/1 kV	*98843207*	*98843229*	*98843251*
	4 x 70 mm^2	50	0.6/1 kV	*98843208*	*98843230*	*98843252*
	6 x 16 + 1 x 10 + 6 x 1.5 mm^2	34	0.6/1 kV	*98843190*	*98843222*	*98843244*
	6 x 25 + 1 x 16 + 6 x 1.5 mm^2	42	0.6/1 kV	*98843201*	*98843223*	*98843245*
	6 x 35 + 1 x 25 + 6 x 1.5 mm^2	45	0.6/1 kV	*98843202*	*98843224*	*98843246*

Cable bush

Pos.	Cable diameter	32	34	42	45	50
	Description/Kit No	*98843271*	*98843272*	*98843273*	*98843274*	*98843275*
198	Rubber seal	2	2	2	2	2
	Washer	2	2	2	2	2

Cartridge Shaft seal kit

Pos.	Range	Poles	Power	
		6		110 kW
		8	37~45 kW	55~90 kW
		10	30~45 kW	55 kW
	Description/Kit No		*98843292*	*98843293*
105	Mechanical seal unit		1	1
-	Cartridge unit		1	1

Outlet casing protector

Pos.	Description/Kit No	*98843338*
117c	Outlet casing protector	6
117d	Socket screw	6

Non return valve

Pos.	Description/Kit No	*98843385*
196	Non return valve	1
	Nipple	1

O-ring for oil plugs

Pos.	Description/Kit No		*98843384*
194	O-ring	3.1 x 16.0	1
195a	O-ring	3.1 x 22.0	1

Power Lock

Pos.	Range	Poles	Power	
		6		110 kW
		8	37~45 kW	55~90 kW
		10	30~45 kW	55 kW
	Description/Kit No		*98843309*	*98843310*
118	Power Lock		1	1

Sensor Cable bush

Pos.	Description/Kit No	*98843287*
250b	Rubber seal	2
	Washer	2

Turbulence Optimizer

Pos.	Description/Kit No	*98843326*
117a	Turbulence Optimizer	1
117b	Socket screw	12
	Washer	24

Wear ring

Pos.	Description/Kit No	*98843359*
46	Wear ring	1
46a	Screw	4

Bearing

Pos.	Range	Poles	Power		
		6			110 kW
		8	37 kW	45 kW	55~90 kW
		10	30 kW	37~45 kW	55 kW
	Description/Kit No		*98843467*	*98843468*	*98843469*
153	Lower bearing		1	1	1
	Lower bearing 2nd		1	1	1
154	Upper bearing		1	1	1
154a	Sleeve		1	1	1
154b	Lip seal		1	1	1
187	Circlip		1	1	1
-	Set screw		2	2	2

Sensor Cable

Without cable bush

Pos.	Description	Cable diameter	Length		
			10 m	15 m	20 m
252	8 x 2.5 mm^2	23	*98843218*	*98843240*	*98843262*
	11 x 2.5 mm^2	23	*98843219*	*98843241*	*98843263*

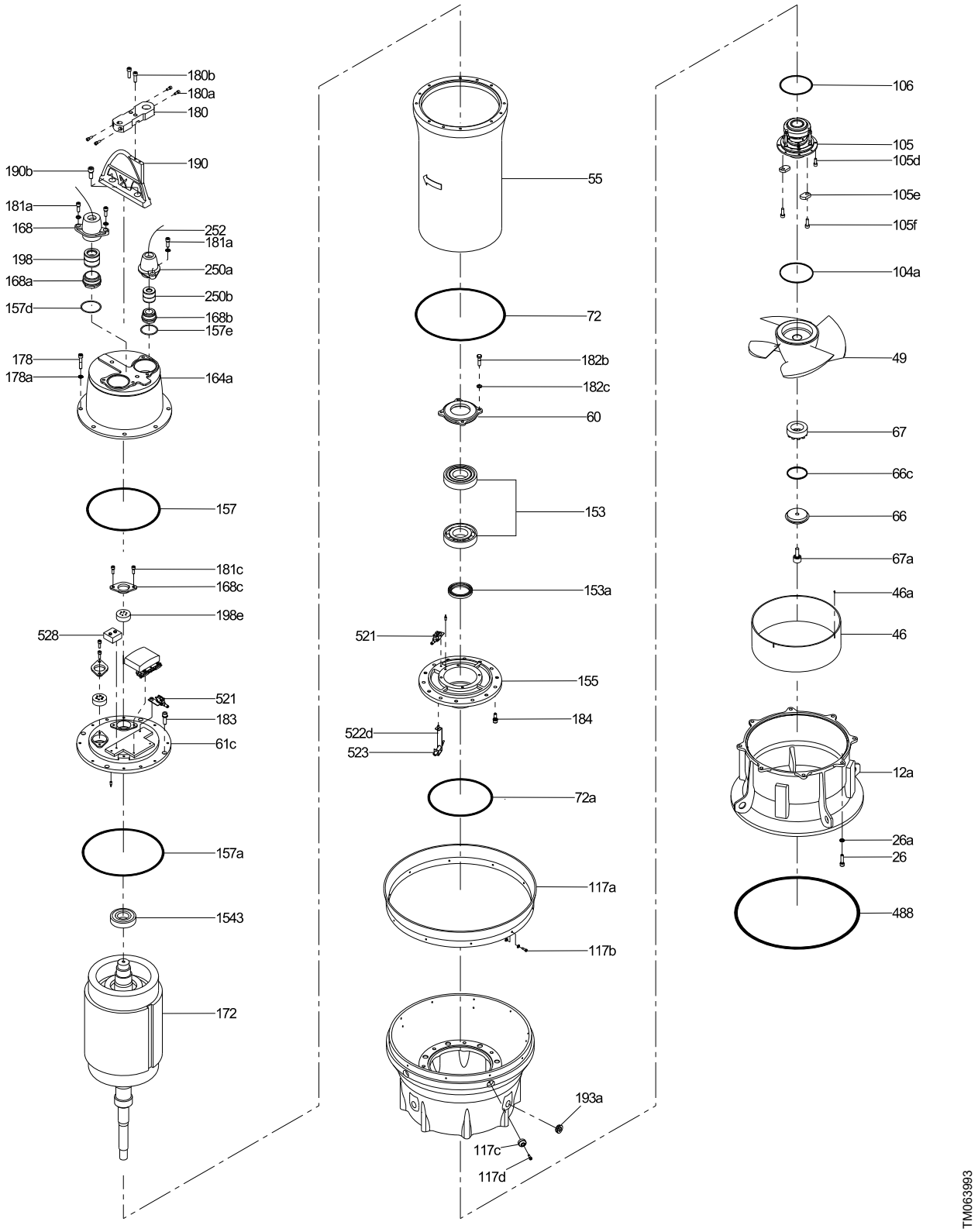
180b
180a
180
190b
190
181a
168
252
181a
198
250a
168a
250b
157d
168b
157e
178
178a
164a
157
181c
168c
198e
528
521
183
61c
157a
1543
172
55
72
182b
182c
60
153
153a
521
155
184
522d
523
72a
117a
117b
193a
117c
117d
106
105
105d
105e
105f
104a
49
67
66c
66
67a
46a
46
12a
26a
26
488
TM063993

O-ring

Pos.	Range	Poles	Power		
		6			110 kW
		8	37 kW	45 kW	55~90 kW
		10	30 kW	37~45 kW	55 kW
	Description/Kit No		*98843393*	*98843394*	*98843395*
49a	O-ring	3.5 x 70.0	1	1	-
		3.5 x 80.0	-	-	1
66b	O-ring	3.5 x 90.0	1	1	1
66c	O-ring	3.5 x 112.0	1	1	1
67c	O-ring	3.1 x 30.0	1	1	1
67b	O-ring	2.4 x 22.0	1	1	1
72	O-ring	5.7 x 370.0	-	1	1
72a	O-ring	5.7 x 355.0	1	1	1
104a	O-ring	3.5 x 70.0	1	1	-
		3.5 x 80.0	-	-	1
105b	O-ring	3.5 x 85.0	1	1	-
		3.5 x 100.0	-	-	1
105c	O-ring	3.5 x 139.0	1	1	-
		5.7 x 150.0	-	-	1
106a	O-ring	3.5 x 55.0	1	1	-
		3.5 x 65.0	-	-	1
154b	Lip seal	TC-9512013	1	1	-
		TC-10513514	-	-	1
157	O-ring	5.7 x 363.0	1	1	1
157a	O-ring	5.7 x 384.0	1	-	-
		5.7 x 414.0	-	1	1
157d	O-ring	3.5 x 85.0	1	1	1
157e	O-ring	3.5 x 70.0	1	1	1
165	O-ring	5.7 x 220.0	1	1	1
194	O-ring	3.1 x 16.0	1	1	1
195a	O-ring	3.1 x 22.0	1	1	1
488	O-ring	12.0 x 670.0	1	1	1

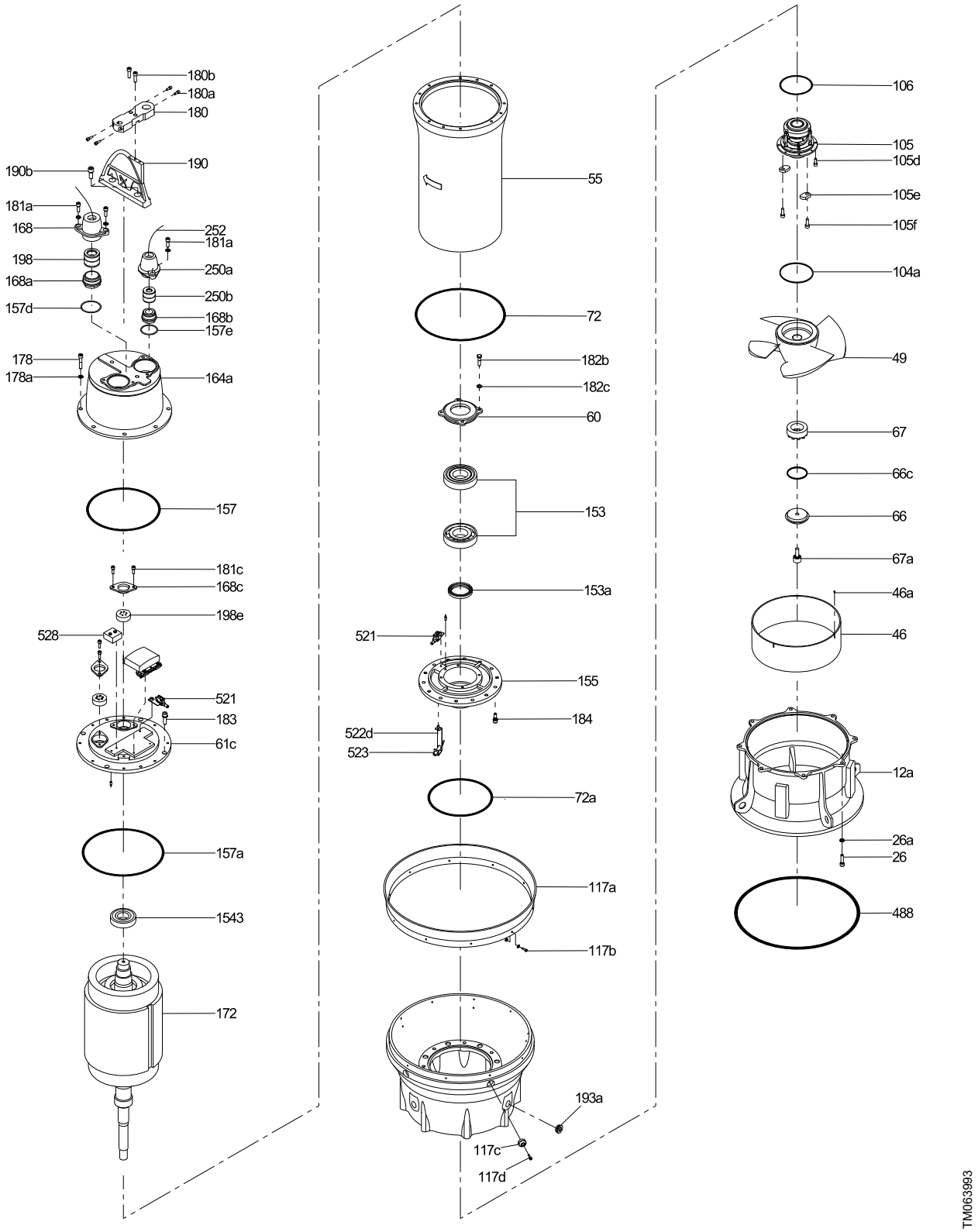
180b
180a
180
190b
190
181a
168
252
181a
198
250a
168a
250b
157d
168b
157e
178
178a
164a
157
181c
168c
198e
528
521
183
61c
157a
1543
172
55
72
182b
182c
60
153
153a
521
155
184
522d
523
72a
117a
117b
193a
117c
117d
106
105
105d
105e
105f
104a
49
67
66c
66
67a
46a
46
12a
26a
26
488
TM063993

KPL 900

Cable

Without cable bush

Pos.	Description	Cable diameter	Voltage	Length		
				10 m	15 m	20 m
181	6 x 16 + 1 x 10 + 6 x 1.5 mm^2	34	0.6/1 kV	*98843190*	*98843222*	*98843244*
	6 x 25 + 1 x 16 + 6 x 1.5 mm^2	42	0.6/1 kV	*98843201*	*98843223*	*98843245*
	6 x 35 + 1 x 25 + 6 x 1.5 mm^2	45	0.6/1 kV	*98843202*	*98843224*	*98843246*
	3 x 25 + 1 x 16 + 4 x 1.5 mm^2	32	0.6/1 kV	*98843205*	*98843227*	*98843249*
	3 x 35 + 1 x 25 + 4 x 1.5 mm^2	32	0.6/1 kV	*98843206*	*98843228*	*98843250*
	3 x 50 + 1 x 35 + 4 x 1.5 mm^2	45	0.6/1 kV	*98843207*	*98843229*	*98843251*
	4 x 70 mm^2	50	0.6/1 kV	*98843208*	*98843230*	*98843252*
	4 x 95 mm^2	56	0.6/1 kV	*98843209*	*98843231*	*98843253*
	4 x 120 mm^2	65	0.6/1 kV	*98843210*	*98843232*	*98843254*
	4 x 35 mm^2	50	3.3 kV	*98843211*	*98843233*	*98843255*
	4 x 35 mm^2	65	6.6 kV	*98843215*	*98843237*	*98843259*

Cable bush (under 55 kW)

Pos.	Cable diameter	32	34	42	45	50
	Description/Kit No	*98843271*	*98843272*	*98843273*	*98843274*	*98843275*
198	Rubber seal	2	2	2	2	2
	Washer	2	2	2	2	2

Cable bush (0.6/1 kV)

Pos.	Cable diameter	45	50	56	65
	Description/Kit No	*98843279*	*98843280*	*98843281*	*98843284*
198	Rubber seal	2	2	2	2
	Washer	2	2	2	2

Sensor Cable bush

Pos.	Description/Kit No	*98843287*
250b	Rubber seal	2
	Washer	2

Turbulence Optimizer

Pos.	Description/Kit No	*98843327*
117a	Turbulence Optimizer	1
117b	Socket screw	12
	Washer	24

Wear ring

Pos.	Description/Kit No	*98843360*
46	Wear ring	1
46a	Screw	4

Outlet casing protector

Pos.	Description/Kit No	*98843339*
117c	Outlet casing protector	6
117d	Socket screw	6

Non return valve

Pos.	Description/Kit No	*98843385*
196	Non return valve	1
	Nipple	1

Cable bush (over 3.3 kV)

Pos.	Cable diameter	50	65
	Description/Kit No	*98843282*	*98843284*
198	Rubber seal	2	2
	Washer	2	2

Bearing

Pos.	Range	Poles	Power		
		6		132~160 kW	200 kW
		8		110~160 kW	
		10	45~55 kW	75~90 kW	
	Description/Kit No		*98843470*	*98843471*	*98843472*
153	Lower bearing		1	2	2
153a	Lower bearing 2nd		1	1	1
154	Upper bearing		1	1	1
154a	Sleeve		1	1	1
154b	Lip seal		1	1	1
187	Circlip		1	-	-
270	Bearing nut		-	1	1
271	Bearing washer		-	1	1
-	Set screw		2	-	-

Sensor Cable

Without cable bush

Pos.	Description	Cable diameter	Length		
			10 m	15 m	20 m
252	8 x 2.5 mm^2	23	*98843218*	*98843240*	*98843262*
	11 x 2.5 mm^2	23	*98843219*	*98843241*	*98843263*

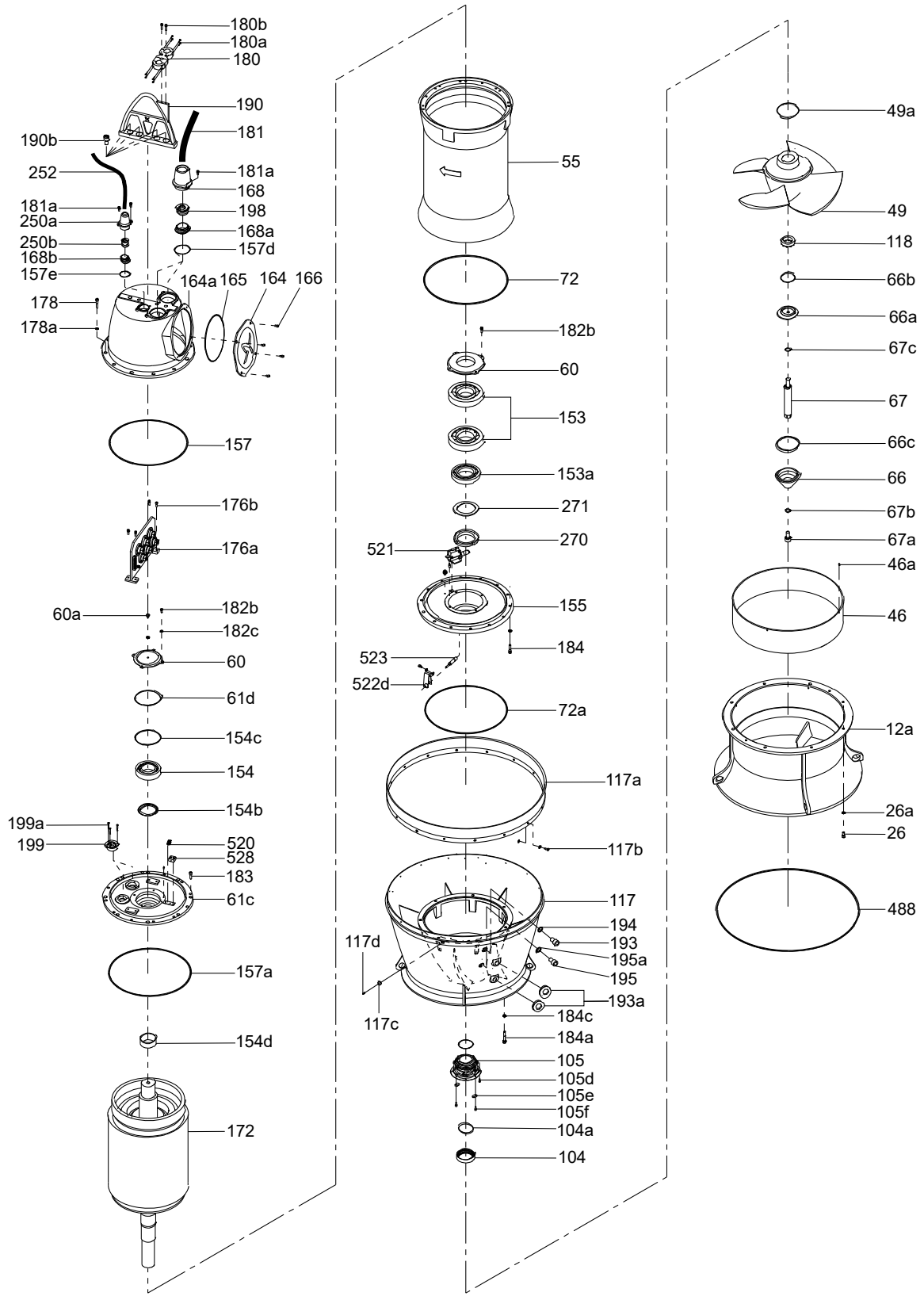
180b
180a
180
190
181
190b
252
181a
168
181a
198
250a
168a
250b
157d
168b
157e
164a
165
164
166
178
178a
157
176b
176a
60a
182b
182c
60
61d
154c
154
154b
199a
199
520
528
183
61c
157a
154d
172
55
72
182b
60
153
153a
271
521
270
155
184
523
522d
72a
117a
117b
117
194
193
117d
195a
195
193a
117c
184c
184a
105
105d
105e
105f
104a
104
49a
49
118
66b
66a
67c
67
66c
66
67b
67a
46a
46
12a
26a
26
488
TM061885

O-ring

Pos.	Range	Poles	Power			
		6		132~160 kW		200 kW
		8		110 kW	132~160 kW	
		10	45~55 kW	75~90 kW		
	Description/Kit No		98843396	98843397	98843398	98843399
49a	O-ring	3.5 x 80.0	1	-	-	-
		3.5 x 90.0	-	1	1	-
		3.5 x 100.0	-	-	-	1
61d	O-ring	5.7 x 160.0	-	1	1	1
66b	O-ring	3.5 x 109.0	1	1	1	1
66c	O-ring	3.5 x 118.0	1	1	1	1
67b	O-ring	2.4 x 22.0	1	1	1	1
67c	O-ring	3.1 x 30.0	1	1	1	1
72	O-ring	8.4 x 505.0	1	1	1	1
72a	O-ring	8.4 x 480.0	1	1	1	1
104a	O-ring	3.5 x 80.0	1	-	-	-
		3.5 x 90.0	-	1	1	-
		3.5 x 100.0	-	-	-	1
105b	O-ring	3.5 x 100.0	1	-	-	-
		3.5 x 120.0	-	1	1	1
105c	O-ring	5.7 x 150.0	1	-	-	-
		5.7 x 175.0	-	1	1	1
106a	O-ring	3.5 x 65.0	1	-	-	-
		3.5 x 75.0	-	1	1	-
		3.5 x 85.0	-	-	-	1
110a	O-ring	3.5 x 80.0	1	-	-	-
		3.5 x 90.0	-	1	1	-
		3.5 x 100.0	-	-	-	1
154b	Lip seal	TC-10513514	1	-	-	-
		TC-12014011	-	1	1	1
154c	O-ring	5.7 x 160.0	-	1	1	1
157	O-ring	5.7 x 363.0	1	-	-	-
		8.4 x 488.0	-	1	-	-
		8.4 x 508.0	-	-	1	1
157a	O-ring	5.7 x 414.0	1	-	-	-
		8.4 x 527.0	-	1	-	-
		8.4 x 552.0	-	-	1	1
157d	O-ring [1)]	3.5 x 85.0	1	-	-	-
		3.5 x 130.0	-	2	2	2
157e	O-ring	3.5 x 70.0	1	-	-	-
		3.5 x 80.0	-	1	1	1
165	O-ring	5.7 x 220.0	1	-	-	-
		5.7 x 280.0	-	1	1	1
194	O-ring	3.1 x 16.0	1	1	1	1
195a	O-ring	3.1 x 22.0	1	1	1	1
488	O-ring	12.0 x 670.0	1	1	1	1

1) O-ring may be more supply.

O-ring for oil plugs

Pos.	Description/Kit No		98843384
194	O-ring	3.1 x 16.0	1
195a	O-ring	3.1 x 22.0	1

Power Lock

Pos.	Range	Poles	Power		
		6		132~160 kW	200 kW
		8		110~160 kW	
		10	45~55 kW	75~90 kW	
	Description/Kit No		98843310	98843311	98843312
118	Power Lock		1	1	1

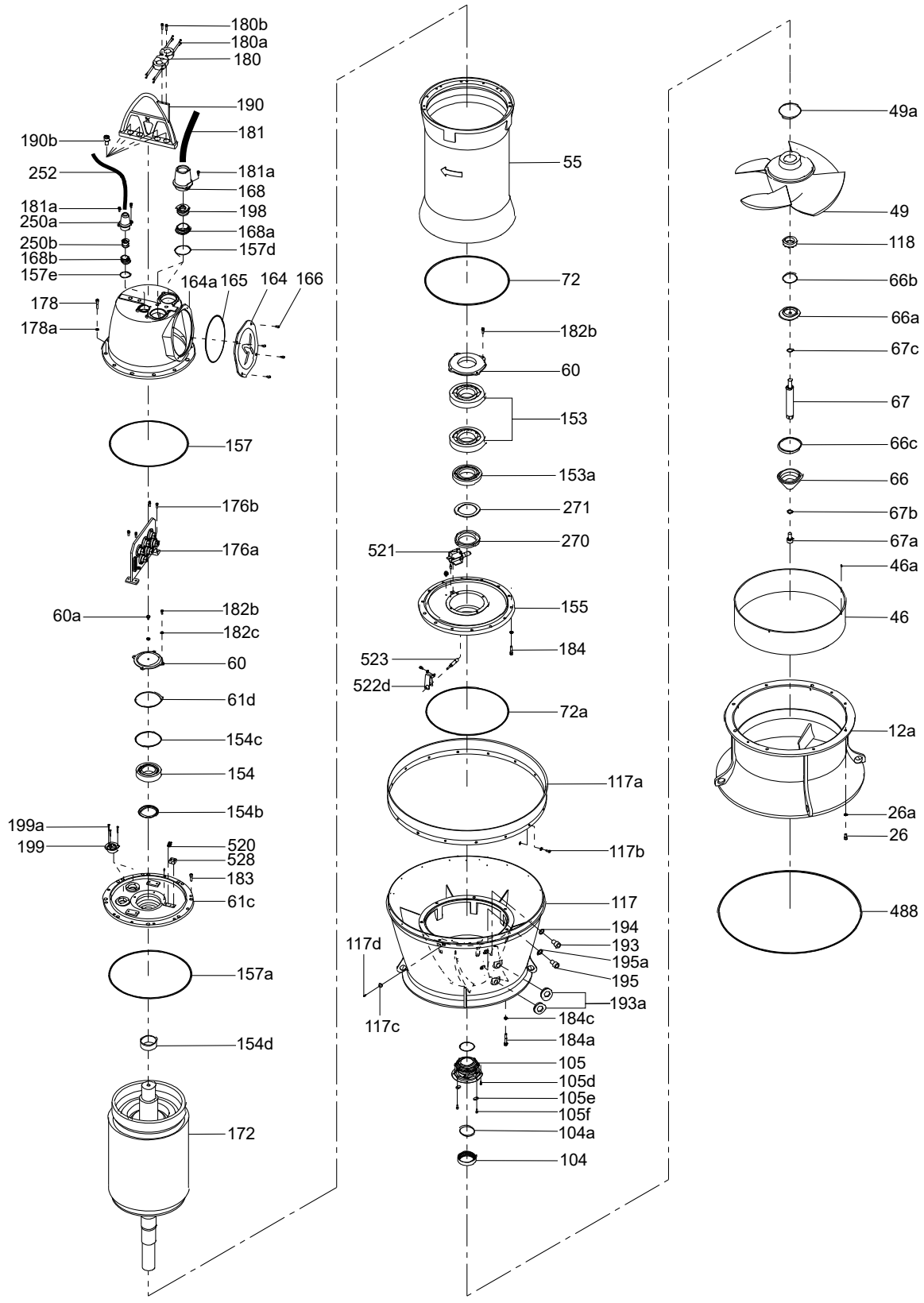
180b
180a
180
190
181
190b
252
181a
168
181a
198
250a
168a
250b
157d
168b
157e
164a
165
164
166
178
178a
157
176b
176a
60a
182b
182c
60
61d
154c
154
154b
199a
199
520
528
183
61c
157a
154d
172
55
72
182b
60
153
153a
271
521
270
155
184
523
522d
72a
117a
117b
117
194
117d
193
195a
195
193a
117c
184c
184a
105
105d
105e
105f
104a
104
49a
49
118
66b
66a
67c
67
66c
66
67b
67a
46a
46
12a
26a
26
488
TM061885

KPL 1000

Bearing

Pos.	Range	Poles	Power			
		8	132 kW	160~200 kW		250~300 kW
		10	75~90 kW	132 kW	160 kW	200~250 kW
		12	75~90 kW	-	132~160 kW	-
	Description/Kit No		*98843473*	*98843474*	*98843475*	*98843476*
153	Lower bearing		2	2	2	2
153a	Lower bearing 2nd		1	1	1	1
154	Upper bearing		1	1	1	1
154b	Lip seal		1	1	1	1
154d	Sleeve		1	1	1	1
270	Bearing nut		1	1	1	1
271	Bearing washer		1	1	1	1

Cable

Without cable bush

Pos.	Description	Out diameter	Voltage	Length		
				10 m	15 m	20 m
181	6 x 35 + 1 x 25 + 6 x 1.5 mm^2	45	0.6/1 kV	*98843202*	*98843224*	*98843246*
	3 x 50 + 1 x 35 + 4 x 1.5 mm^2	45	0.6/1 kV	*98843207*	*98843229*	*98843251*
	4 x 70 mm^2	50	0.6/1 kV	*98843208*	*98843230*	*98843252*
	4 x 95 mm^2	56	0.6/1 kV	*98843209*	*98843231*	*98843253*
	4 x 120 mm^2	65	0.6/1 kV	*98843210*	*98843232*	*98843254*
	4 x 35 mm^2	50	3.3 kV	*98843211*	*98843233*	*98843255*
	4 x 35 mm^2	65	6.6 kV	*98843215*	*98843237*	*98843259*

Cable bush (0.6/1 kV)

Pos.	Cable diameter	45	50	56	65
	Description/Kit No	*98843279*	*98843280*	*98843281*	*98843284*
198	Rubber seal	2	2	2	2
	Washer	2	2	2	2

Cable bush (over 3.3 kV)

Pos.	Cable diameter	50	65
	Description/Kit No	*98843282*	*98843284*
198	Rubber seal	2	2
	Washer	2	2

Cartridge Shaft seal kit

Pos.	Range	Poles	Power		
		8	132 kW	160~200 kW	250~300 kW
		10	75~90 kW	132~160 kW	200~250 kW
		12	75~90 kW	132~160 kW	
	Description/Kit No		*98843294*	*98843295*	*98843297*
105	Mechanical seal unit		1	1	1
-	Cartridge unit		1	1	1

Outlet casing protector

Pos.	Description/Kit No	*98843340*
117c	Outlet casing protector	6
117d	Socket screw	6

Non return valve

Pos.	Description/Kit No	*98843385*
196	Non return valve	1
	Nipple	1

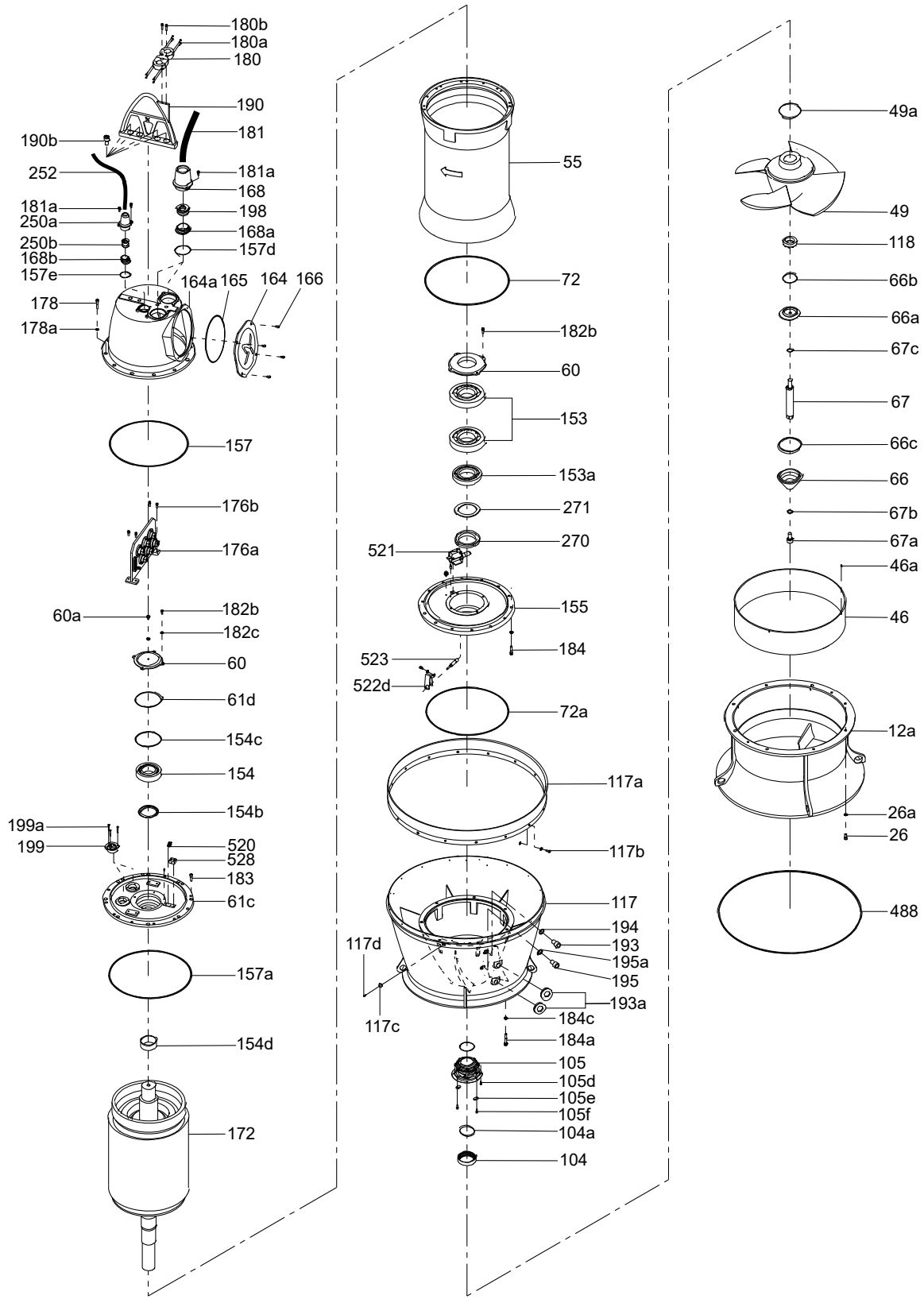
180b
180a
180
190
181
190b
252
181a
168
181a
198
250a
168a
250b
157d
168b
157e
164a
165
164
166
178
178a
157
176b
176a
60a
182b
182c
60
61d
154c
154
154b
199a
199
520
528
183
61c
157a
154d
172
55
72
182b
60
153
153a
271
521
270
155
184
523
522d
72a
117a
117b
117
194
117d
193
195a
195
193a
117c
184c
184a
105
105d
105e
105f
104a
104
49a
49
118
66b
66a
67c
67
66c
66
67b
67a
46a
46
12a
26a
26
488
TM061885

O-ring

Pos.	Range	Poles	Power				
		8	-	132 kW	160~200 kW	-	250~300 kW
		10	75~90 kW	-	132 kW	160 kW	200~250 kW
		12	75~90 kW	-	-	132~160 kW	-
	Description/Kit No		*98843400*	*98843401*	*98843402*	*98843403*	*98843404*
49a	O-ring	3.5 x 90.0	1	1	-	-	-
		3.5 x 100.0	-	-	1	1	-
		3.5 x 110.0	-	-	-	-	1
61d	O-ring	5.7 x 160.0	1	1	1	-	-
		5.7 x 180.0	-	-	-	1	1
66b	O-ring	3.5 x 130.0	1	1	1	1	1
66c	O-ring	3.5 x 143.0	1	1	1	1	1
67b	O-ring	3.1 x 40.0	1	1	1	1	1
67c	O-ring	3.1 x 42.0	1	1	1	1	1
72	O-ring	8.4 x 505.0	1	1	1	1	1
72a	O-ring	8.4 x 480.0	1	1	1	1	1
104a	O-ring	3.5 x 90.0	1	1	-	-	-
		3.5 x 100.0	-	-	1	1	-
		3.5 x 110.0	-	-	-	-	1
105b	O-ring	3.5 x 120.0	1	1	1	1	-
		3.5 x 130.0	-	-	-	-	1
105c	O-ring	5.7 x 175.0	1	1	1	1	-
		5.7 x 190.0	-	-	-	-	1
106a	O-ring	3.5 x 75.0	1	1	-	-	-
		3.5 x 85.0	-	-	1	1	-
		3.5 x 95.0	-	-	-	-	1
154c	O-ring	5.7 x 160.0	1	1	1	-	-
		5.7 x 180.0	-	-	-	1	1
154b	Lip seal	TC-12014011	1	1	1	-	-
		TC-13516514	-	-	-	1	1
157	O-ring	8.4 x 488.0	1	-	-	-	-
		8.4 x 508.0	-	1	1	-	-
		8.4 x 605.0	-	-	-	1	1
157a	O-ring	8.4 x 527.0	1	-	-	-	-
		8.4 x 552.0	-	1	1	-	-
		8.4 x 622.0	-	-	-	1	1
157d	O-ring [1)]	3.5 x 130.0	2	2	2	2	2
157e	O-ring	3.5 x 80.0	1	1	1	1	1
165	O-ring	5.7 x 280.0	1	1	1	1	1
194	O-ring	3.1 x 16.0	1	1	1	1	1
195a	O-ring	3.1 x 22.0	1	1	1	1	1
488	O-ring	12.0 x 860.0	1	1	1	1	1

1) More O-rings might be supplied than the mentioned numbers.

Power Lock

Pos.	Range	Poles	Power		
		8	132 kW	160~200 kW	250~300 kW
		10	75~90 kW	132~160 kW	200~250 kW
		12	75~90 kW	132~160 kW	
	Description/Kit No		*98843311*	*98843313*	*98843314*
118	Power Lock		1	1	1

Sensor Cable

Without cable bush

Pos.	Description	Cable diameter	Length		
			10 m	15 m	20 m
252	8 x 2.5 mm^2	23	*98843218*	*98843240*	*98843262*
	11 x 2.5 mm^2	23	*98843219*	*98843241*	*98843263*

O-ring for oil plugs

Pos.	Description/Kit No		*98843384*
194	O-ring	3.1 x 16.0	1
195a	O-ring	3.1 x 22.0	1

Sensor Cable bush

Pos.	Description/Kit No	*98843287*
250b	Rubber seal	2
	Washer	2

Turbulence Optimizer

Pos.	Description/Kit No	*98843328*
117a	Turbulence Optimizer	1
117b	Socket screw	12
	Washer	24

Wear ring

Pos.	Description/Kit No	*98843361*
46	Wear ring	1
46a	Screw	4

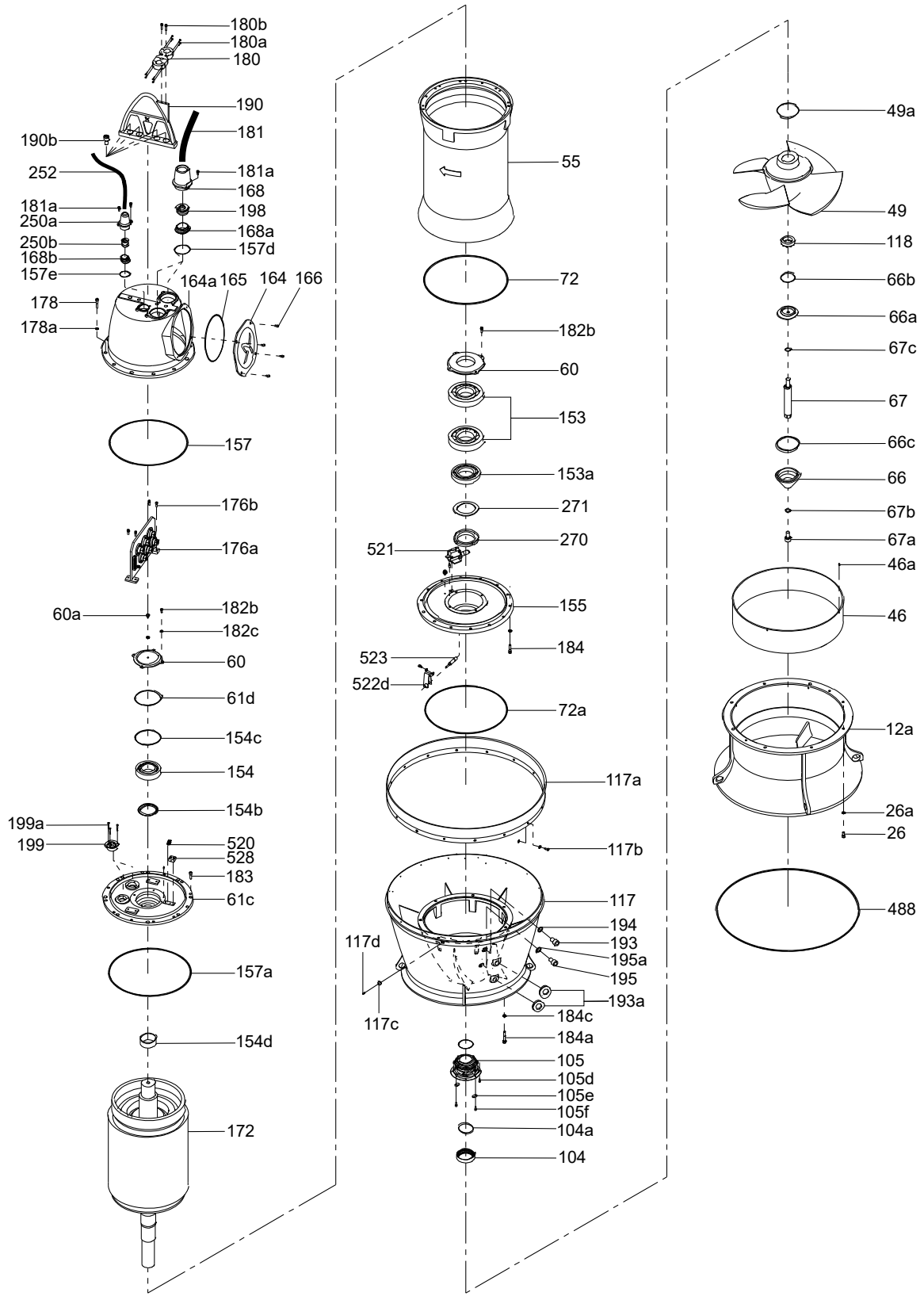
180b
180a
180
190
181
190b
252
181a
168
181a
198
250a
168a
250b
157d
168b
157e
164a
165
164
166
178
178a
157
176b
176a
60a
182b
182c
60
61d
154c
154
154b
199a
199
520
528
183
61c
157a
154d
172
55
72
182b
60
153
153a
271
521
270
155
184
523
522d
72a
117a
117b
117
194
117d
193
195a
195
193a
117c
184c
184a
105
105d
105e
105f
104a
104
49a
49
118
66b
66a
67c
67
66c
66
67b
67a
46a
46
12a
26a
26
488
TM061885

KPL 1200

Cable

Without cable bush

Pos.	Description	Out diameter	Voltage	Length		
				10 m	15 m	20 m
181	3 x 50 + 1 x 35 + 4 x 1.5 mm^2	45	0.6/1 kV	*98843207*	*98843229*	*98843251*
	4 x 70 mm^2	50	0.6/1 kV	*98843208*	*98843230*	*98843252*
	4 x 95 mm^2	56	0.6/1 kV	*98843209*	*98843231*	*98843253*
	4 x 120 mm^2	65	0.6/1 kV	*98843210*	*98843232*	*98843254*
	4 x 35 mm^2	50	3.3 kV	*98843211*	*98843233*	*98843255*
	4 x 50 mm^2	56	3.3 kV	*98843212*	*98843234*	*98843256*
	4 x 35 mm^2	65	6.6 kV	*98843215*	*98843237*	*98843259*

Cable bush (0.6/1 kV)

Pos.	Cable diameter	45	50	56	65
	Description/Kit No	***98843279***	***98843280***	***98843281***	***98843284***
198	Rubber seal	2	2	2	2
	Washer	2	2	2	2

Bearing

Pos.	Range	Poles	Power		
		10	220 kW	250~300 kW	335~400 kW
		12	132~200 kW	220~250 kW	300 kW
		14	132~200 kW	250 kW	
	Description/Kit No	***98843477***	***98843478***	***98843479***	
153	Lower bearing	2	2	2	
153a	Lower bearing 2nd	1	1	1	
154	Upper bearing	1	1	1	
154b	Lip seal	1	1	1	
154d	Sleeve	1	1	1	
270	Bearing nut	1	1	1	
271	Bearing washer	1	1	1	

Cable bush (over 3.3 kV)

Pos.	Cable diameter	50	56	65
	Description/Kit No	***98843282***	***98843283***	***98843284***
198	Rubber seal	2	2	2
	Washer	2	2	2

Cartridge Shaft seal kit

Pos.	Range	Poles	Power		
		10	220 kW	250~300 kW	335~400 kW
		12	132~200 kW	220~250 kW	300 kW
		14	132~200 kW	250 kW	
	Description/Kit No	***98843297***	***98843298***	***98843299***	
105	Mechanical seal unit	1	1	1	
-	Cartridge unit	1	1	1	

Outlet casing protector

Pos.	Description/Kit No	***98843341***
117c	Outlet casing protector	6
117d	Socket screw	6

Non return valve

Pos.	Description/Kit No	***98843385***
196	Non return valve	1
	Nipple	1

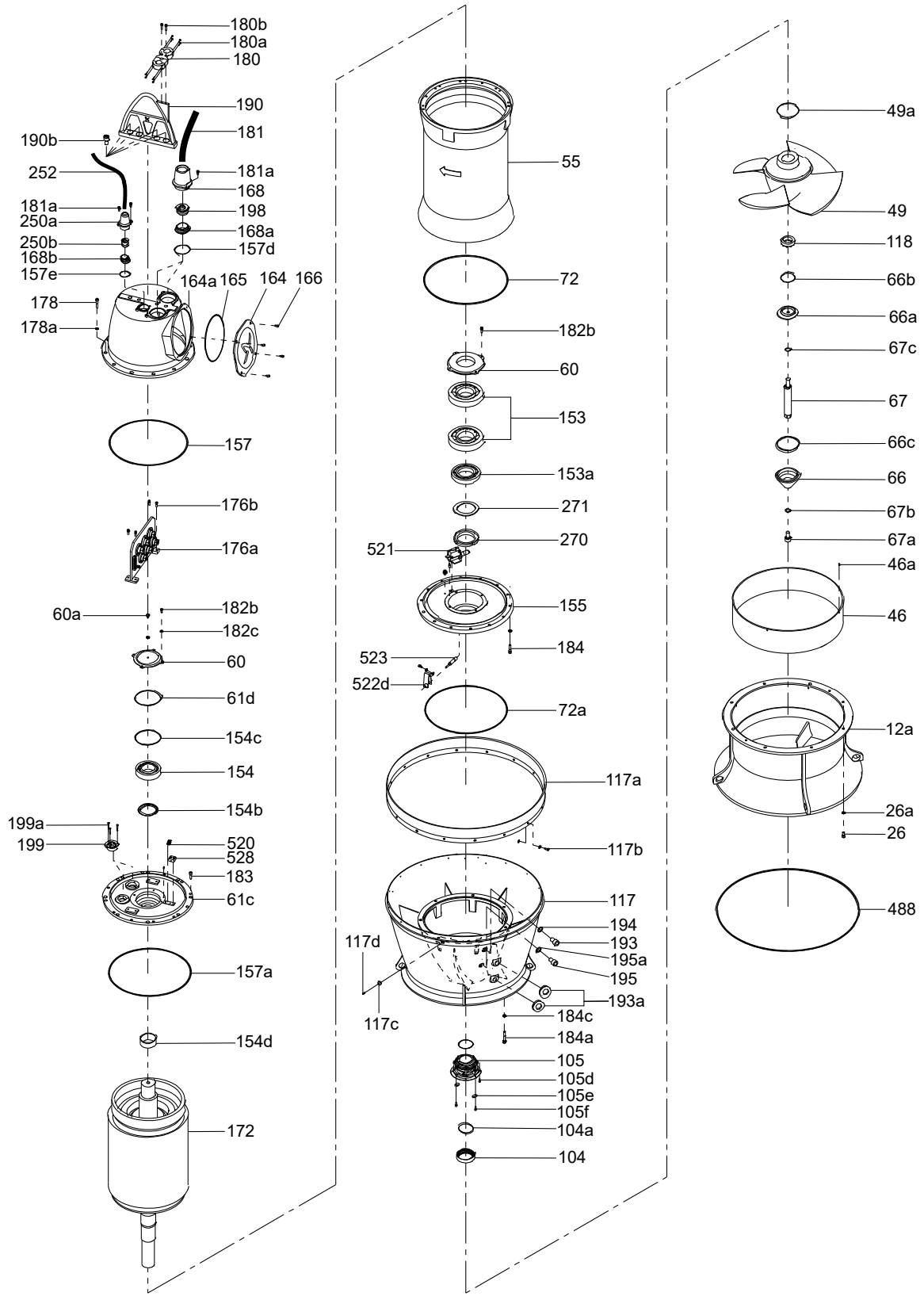
180b
180a
180
190
181
190b
252
181a
168
181a
198
250a
168a
250b
157d
168b
157e
164a
165
164
166
178
178a
157
176b
176a
60a
182b
182c
60
61d
154c
154
154b
199a
199
520
528
183
61c
157a
154d
172
55
72
182b
60
153
153a
271
521
270
155
184
523
522d
72a
117a
117b
117
194
117d
193
195a
195
193a
117c
184c
184a
105
105d
105e
105f
104a
104
49a
49
118
66b
66a
67c
67
66c
66
67b
67a
46a
46
12a
26a
26
488
TM061885

O-ring

Pos.	Range	Poles	Power				
		10	220 kW	250 kW	-	300 kW	335~400 kW
		12	132~160		200 kW	220~250 kW	300 kW
		14	132 kW		160~200 kW	250 kW	
	Description/Kit No		*98843406*	*98843407*	*98843408*	*98843409*	*98843410*
49a	O-ring	3.5 x 110.0	1		1	-	-
		3.5 x 120.0	-	1	-	1	-
		3.5 x 130.0	-	-	-	-	1
61d	O-ring	5.7 x 180.0	1	1	1	1	1
66b	O-ring	3.5 x 155.0	1	1	1	1	1
66c	O-ring	5.7 x 185.0	1	1	1	1	1
67b	O-ring	3.1 x 40.0	1	1	1	1	1
67c	O-ring	3.1 x 42.0	1	1	1	1	1
72	O-ring	8.4 x 650.0	1	1	1	1	1
72a	O-ring	8.4 x 620.0	1	1	1	1	1
104a	O-ring	3.5 x 110.0	1		1	-	-
		3.5 x 120.0	-	1	-	1	-
		3.5 x 130.0	-	-	-	-	1
105b	O-ring	3.5 x 130.0	1	-	1	-	-
		5.7 x 150.0	-	1		1	1
105c	O-ring	5.7 x 190.0	1	-	1	-	-
		5.7 x 210.0	-	1		1	1
106a	O-ring	3.5 x 95.0	1	-	1	-	-
		3.5 x 105.0	-	1	-	1	-
		3.5 x 115.0	-	-	-	-	1
154b	Lip seal	TC-13516514	1	1	1	1	1
154c	O-ring	5.7 x 180.0	1	1	1	1	1
157	O-ring	8.4 x 605.0	1	1	-	-	-
		8.4 x 670.0	-	-	1	1	1
157a	O-ring	8.4 x 622.0	1	1	-	-	-
		8.4 x 702.0	-	-	1	1	1
157d	O-ring [1)]	3.5 x 130.0	2	2	4	4	4
157e	O-ring	3.5 x 80.0	1	1	1	1	1
165	O-ring	5.7 x 280.0	1	1	-	-	-
		5.7 x 400.0	-	-	1	1	1
194	O-ring	3.1 x 16.0	1	1	1	1	1
195a	O-ring	3.1 x 22.0	1	1	1	1	1
488	O-ring	12.0 x 1040.0	1	1	1	1	1

1) More O-rings might be supplied than the mentioned numbers.

Power Lock

Pos.	Range	Poles	Power		
		10	220 kW	250~300 kW	335~400 kW
		12	132~200 kW	220~250 kW	300 kW
		14	132~200 kW	250 kW	
	Description/Kit No		*98843314*	*98843315*	*98843316*
118	Power Lock		1	1	1

Sensor Cable

Without cable bush

Pos.	Description	Cable diameter	Length		
			10 m	15 m	20 m
252	8 x 2.5 mm^2	23	*98843218*	*98843240*	*98843262*
	11 x 2.5 mm^2	23	*98843219*	*98843241*	*98843263*

Sensor Cable bush

Pos.	Description/Kit No	*98843287*
250b	Rubber seal	2
	Washer	2

Turbulence Optimizer

Pos.	Description/Kit No	*98843329*
117a	Turbulence Optimizer	1
117b	Socket screw	12
	Washer	24

Wear ring

Pos.	Description/Kit No	*98843362*
46	Wear ring	1
46a	Screw	4

O-ring for oil plugs

Pos.	Description/Kit No		98843384
194	O-ring	3.1 x 16.0	1

Pos.	Description/Kit No		98843384
195a	O-ring	3.1 x 22.0	1

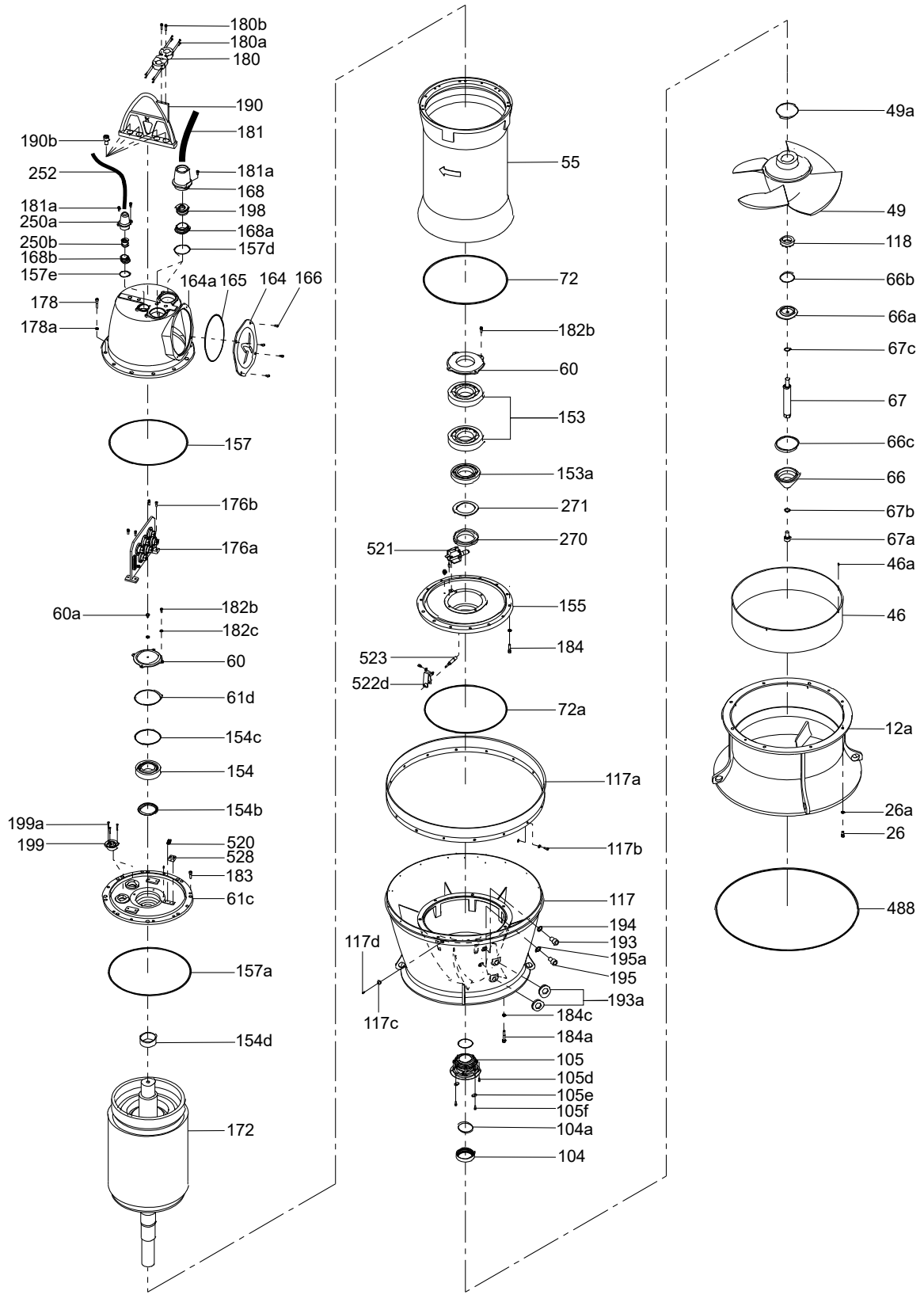

KPL 1400

Bearing

Pos.	Range	Poles	Power			
		12	220~250 kW	300 kW	350 kW	400 kW
		14	132~200 kW	250 kW	300~375 kW	450 kW
		16	132~200 kW	-	250~300 kW	-
	Description/Kit No		***98843480***	***98843481***	***98843482***	***98843483***
153	Lower bearing		2	2	2	2
153a	Lower bearing 2nd		1	1	1	1
154	Upper bearing		1	1	1	1
154b	Lip seal		1	1	1	1
154d	Sleeve		1	1	1	1
270	Bearing nut		1	1	1	1
271	Bearing washer		1	1	1	1

Cable

Without cable bush

Pos.	Description	Out diameter	Voltage	Length		
				10 m	15 m	20 m
181	3 x 50 + 1 x 35 + 4 x 1.5 mm^2	45	0.6/1 kV	*98843207*	*98843229*	*98843251*
	4 x 70 mm^2	50	0.6/1 kV	*98843208*	*98843230*	*98843252*
	4 x 95 mm^2	56	0.6/1 kV	*98843209*	*98843231*	*98843253*
	4 x 120 mm^2	65	0.6/1 kV	*98843210*	*98843232*	*98843254*
	4 x 35 mm^2	50	3.3 kV	*98843211*	*98843233*	*98843255*
	4 x 50 mm^2	56	3.3 kV	*98843212*	*98843234*	*98843256*
	4 x 70 mm^2	65	3.3 kV	*98843213*	*98843235*	*98843257*
	4 x 35 mm^2	65	6.6 kV	*98843215*	*98843237*	*98843259*
	4 x 50 mm^2	65	6.6 kV	*98843216*	*98843238*	*98843260*

Cable bush (0.6/1 kV)

Pos.	Cable diameter	45	50	56	65
	Description/Kit No	***98843279***	***98843280***	***98843281***	***98843284***
198	Rubber seal	2	2	2	2
	Washer	2	2	2	2

Cable bush (over 3.3 kV)

Pos.	Cable diameter	50	56	65
	Description/Kit No	***98843282***	***98843283***	***98843284***
198	Rubber seal	2	2	2
	Washer	2	2	2

Cartridge Shaft seal kit

Pos.	Range	Poles	Power		
		12	220~250 kW	300~350 kW	400 kW
		14	132~200 kW	250~375 kW	450 kW
		16	132~200 kW	250~300 kW	
	Description/Kit No		***98843298***	***98843299***	***98843300***
105	Mechanical seal unit		1	1	1
-	Cartridge unit		1	1	1

Outlet casing protector

Pos.	Description/Kit No	***98843342***
117c	Outlet casing protector	6
117d	Socket screw	6

Non return valve

Pos.	Description/Kit No	***98843385***
196	Non return valve	1
	Nipple	1

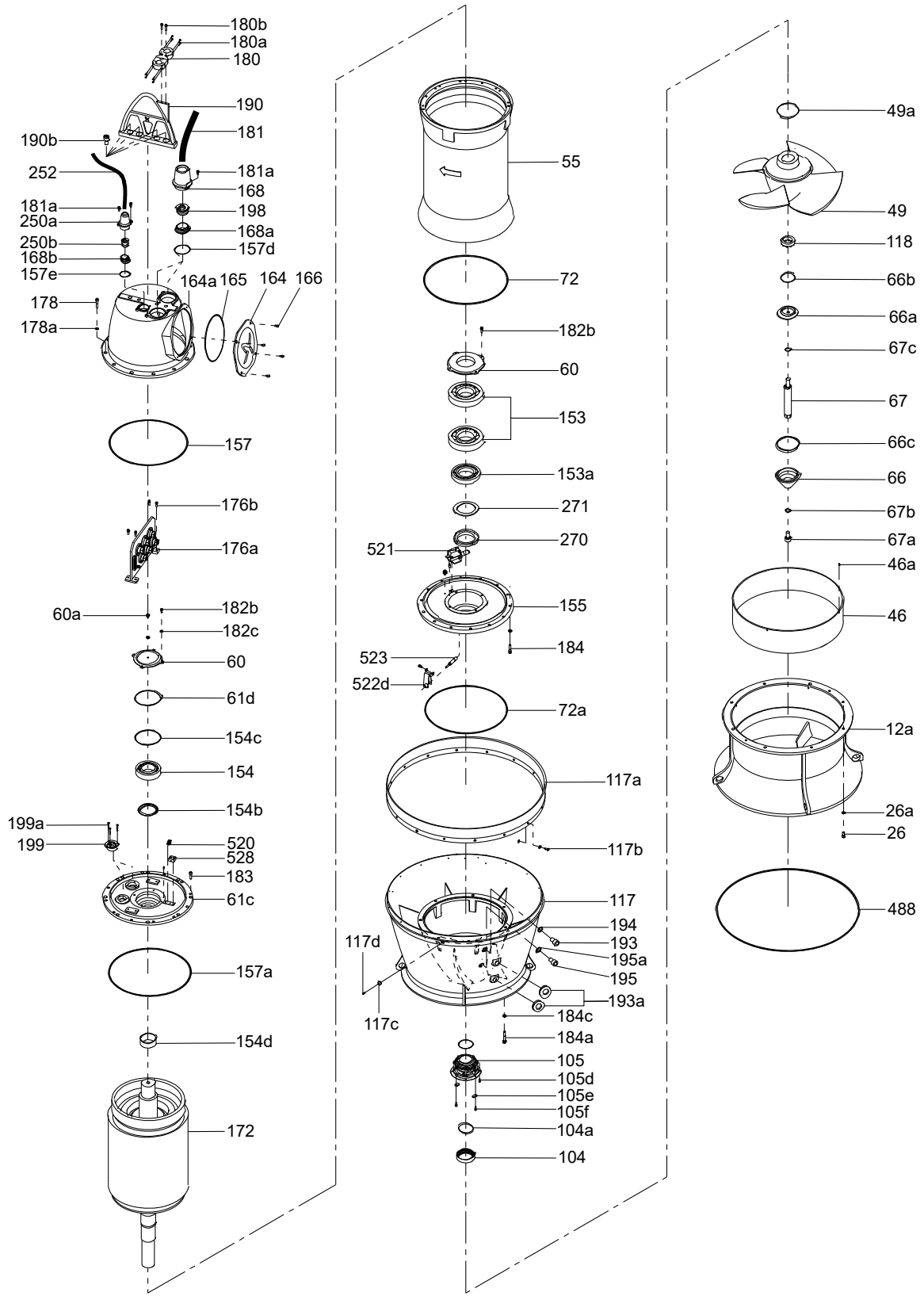
180b
180a
180
190
181
190b
252
181a
168
181a
198
250a
168a
250b
157d
168b
157e
164a
165
164
166
178
178a
157
176b
176a
60a
182b
182c
60
61d
154c
154
154b
199a
199
520
528
183
61c
157a
154d
172
55
72
182b
60
153
153a
271
521
270
155
184
523
522d
72a
117a
117b
117
194
193
195a
195
193a
117d
117c
184c
184a
105
105d
105e
105f
104a
104
49a
49
118
66b
66a
67c
67
66c
66
67b
67a
46a
46
12a
26a
26
488
TM061885

O-ring

Pos.	Range	Poles	Power			
		12	220~250 kW	300 kW	350 kW	400 kW
		14	132~200 kW	250 kW	300~375 kW	450 kW
		16	132~200 kW	-	250~300 kW	-
	Description/Kit No		*98843411*	*98843412*	*98843413*	*98843414*
49a	O-ring	3.5 x 120.0	1	-	-	-
		3.5 x 130.0	-	1	1	-
		3.5 x 140.0	-	-	-	1
61d	O-ring	5.7 x 180.0	1	1	-	-
		5.7 x 215.0	-	-	1	1
66b	O-ring	5.7 x 165.0	1	1	1	1
66c	O-ring	5.7 x 185.0	1	1	1	1
67c	O-ring	3.1 x 42.0	1	1	1	1
67b	O-ring	3.1 x 40.0	1	1	1	1
72	O-ring	8.4 x 720.0	1	1	1	1
72a	O-ring	8.4 x 710.0	1	1	1	1
104a	O-ring	3.5 x 120.0	1	-	-	-
		3.5 x 130.0	-	1	1	-
		3.5 x 140.0	-	-	-	1
105b	O-ring	5.7 x 150.0	1	1	1	-
		5.7 x 170.0	-	-	-	1
105c	O-ring	5.7 x 210.0	1	1	1	-
		5.7 x 230.0	-	-	-	1
106a	O-ring	3.5 x 105.0	1	-	-	-
		3.5 x 115.0	-	1	1	-
		3.5 x 125.0	-	-	-	1
154b	Lip seal	TC-13516514	1	1	-	-
		TC-16019014	-	-	1	1
154c	O-ring	5.7 x 180.0	1	1	-	-
		5.7 x 215.0	-	-	1	1
157	O-ring	8.4 x 670.0	1	1	-	-
		8.4 x 750.0	-	-	1	1
157a	O-ring	8.4 x 702.0	1	1	-	-
		8.4 x 782.0	-	-	1	1
157d	O-ring [1)]	3.5 x 130.0	4	4	4	4
157e	O-ring	3.5 x 80.0	1	1	1	1
165	O-ring	5.7 x 400.0	1	1	1	1
194	O-ring	3.1 x 16.0	1	1	1	1
195a	O-ring	3.1 x 22.0	1	1	1	1
488	O-ring	12.0 x 1230.0	1	1	1	1

1) More O-rings might be supplied than the mentioned numbers.

Power Lock

Pos.	Range	Poles	Power		
		12	220~250 kW	300~350 kW	400 kW
		14	132~200 kW	250~375 kW	450 kW
		16	132~200 kW	250~300 kW	
	Description/Kit No		*98843315*	*98843316*	*98843317*
118	Power Lock		1	1	1

Sensor Cable

Without cable bush

Pos.	Description	Cable diameter	Length		
			10 m	15 m	20 m
252	8 x 2.5 mm^2	23	*98843218*	*98843240*	*98843262*
	11 x 2.5 mm^2	23	*98843219*	*98843241*	*98843263*

O-ring for oil plugs

Pos.	Description/Kit No		*98843384*
194	O-ring	3.1 x 16.0	1
195a	O-ring	3.1 x 22.0	1

Sensor Cable bush

Pos.	Description/Kit No	*98843287*
250b	Rubber seal	2
	Washer	2

Turbulence Optimizer

Pos.	Description/Kit No	*98843330*
117a	Turbulence Optimizer	1
117b	Socket screw	12
	Washer	24

Wear ring

Pos.	Description/Kit No	*98843363*
46	Wear ring	1
46a	Screw	4

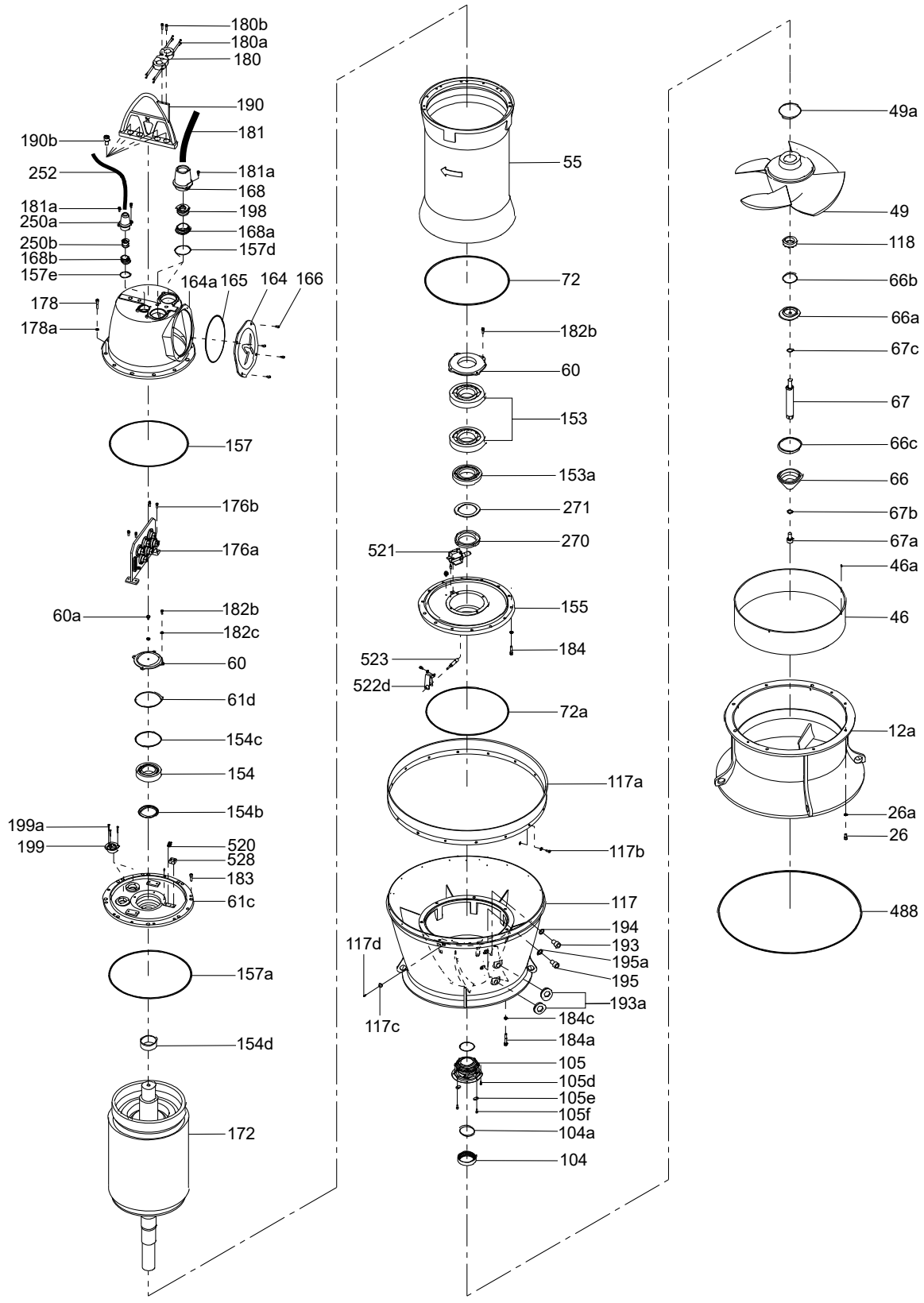
180b
180a
180
190
181
190b
252
181a
168
181a
198
250a
168a
250b
157d
168b
157e
164a
165
164
166
178
178a
157
176b
176a
60a
182b
182c
60
61d
154c
154
154b
199a
199
520
528
183
61c
157a
154d
172
55
72
182b
60
153
153a
271
521
270
155
184
523
522d
72a
117a
117b
117
194
193
117d
195a
195
193a
184c
117c
184a
105
105d
105e
105f
104a
104
49a
49
118
66b
66a
67c
67
66c
66
67b
67a
46a
46
12a
26a
26
488
TM061885

KPL 1500

Bearing

Pos.	Range	Poles	Power				
		12			350~450 kW	500 kW	
		14	200~250 kW	300 kW	350~375 kW	450 kW	500~600 kW
		16	200 kW	250~300 kW	350 kW	400 kW	
	Description/Kit No		*98843484*	*98843485*	*98843486*	*98843487*	*98843488*
153	Lower bearing		2	2	2	2	2
153a	Lower bearing 2nd		1	1	1	1	1
154	Upper bearing		1	1	1	1	1
154b	Lip seal		1	1	1	1	1
154d	Sleeve		1	1	1	1	1
270	Bearing nut		1	1	1	1	1
271	Bearing washer		1	1	1	1	1

Cable

Without cable bush

Pos.	Description	Out diameter	Voltage	Length		
				10 m	15 m	20 m
181	3 x 50 + 1 x 35 + 4 x 1.5 mm^2	45.0	0.6/1 kV	*98843207*	*98843229*	*98843251*
	4 x 70 mm^2	50.0	0.6/1 kV	*98843208*	*98843230*	*98843252*
	4 x 95 mm^2	56.0	0.6/1 kV	*98843209*	*98843231*	*98843253*
	4 x 120 mm^2	65.0	0.6/1 kV	*98843210*	*98843232*	*98843254*
	4 x 35 mm^2	50.0	3.3 kV	*98843211*	*98843233*	*98843255*
	4 x 50 mm^2	56.0	3.3 kV	*98843212*	*98843234*	*98843256*
	4 x 70 mm^2	65.0	3.3 kV	*98843213*	*98843235*	*98843257*
	4 x 95 mm^2	69.5	3.3 kV	*98843214*	*98843236*	*98843258*
	4 x 35 mm^2	65.0	6.6 kV	*98843215*	*98843237*	*98843259*
	4 x 50 mm^2	65.0	6.6 kV	*98843216*	*98843238*	*98843260*
	4 x 70 mm^2	72.0	6.6 kV	*98843217*	*98843239*	*98843261*

Cable bush (over 3.3 kV)

Pos.	Cable diameter	50	56	65	69.5	72
	Description/Kit No	*98843282*	*98843283*	*98843284*	*98843285*	*98843286*
198	Rubber seal	2	2	2	2	2
	Washer	2	2	2	2	2

Cable bush (0.6/1 kV)

Pos.	Cable diameter	45	50	56	65
	Description/Kit No	*98843279*	*98843280*	*98843281*	*98843284*
198	Rubber seal	2	2	2	2
	Washer	2	2	2	2

Cartridge Shaft seal kit

Pos.	Range	Poles	Power		
		12		350~450 kW	500 kW
		14	200~300 kW	350~375 kW	450~600 kW
		16	200~300 kW	350 kW	400 kW
	Description/Kit No		*98843299*	*98843300*	*98843301*
105	Mechanical seal unit		1	1	1
-	Cartridge unit		1	1	1

Outlet casing protector

Pos.	Description/Kit No	*98843343*
117c	Outlet casing protector	6
117d	Socket screw	6

Non return valve

Pos.	Description/Kit No	*98843385*
196	Non return valve	1
	Nipple	1

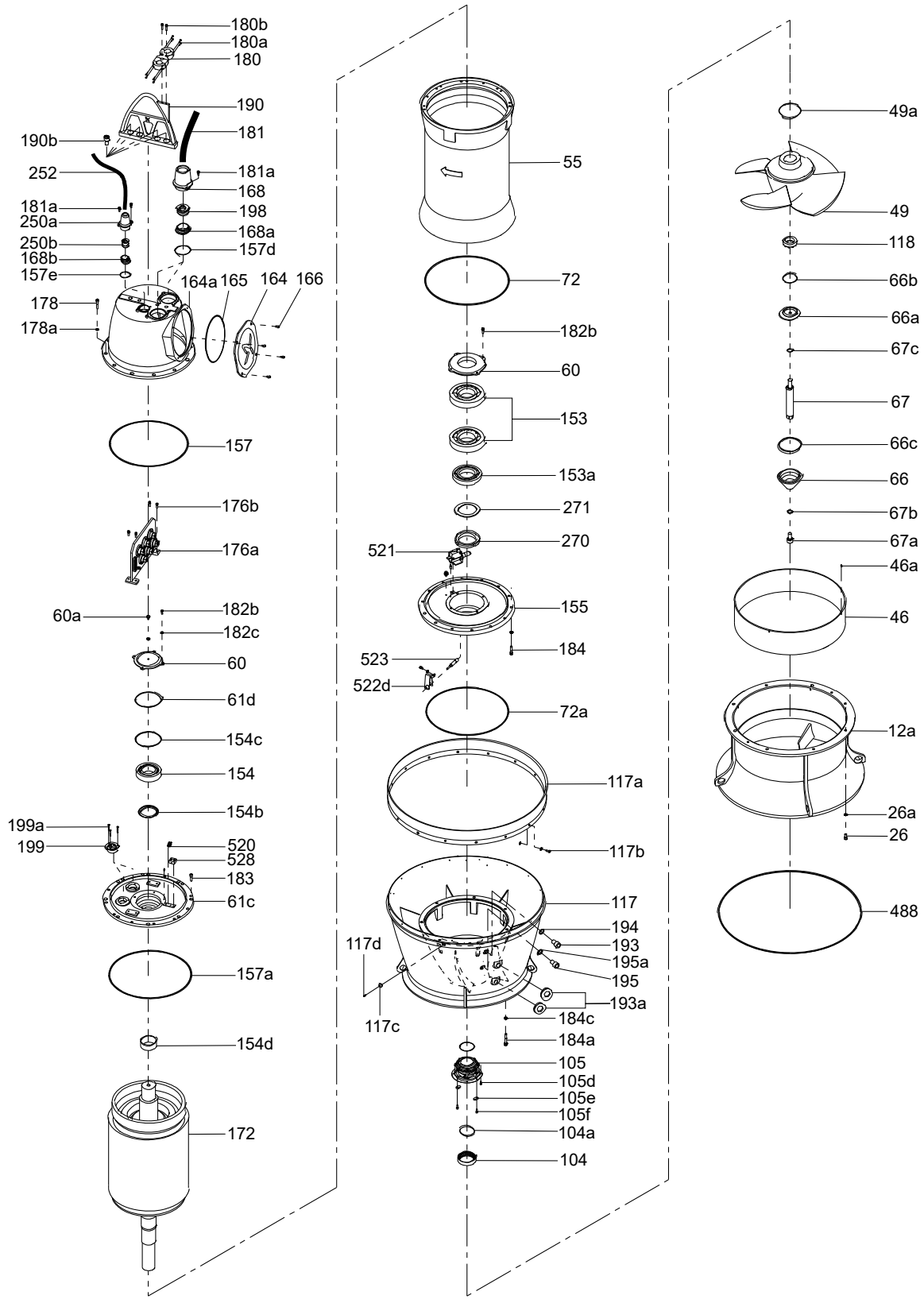
180b
180a
180
190
181
190b
252
181a
168
181a
198
250a
168a
250b
157d
168b
157e
164a
165
164
166
178
178a
157
176b
176a
60a
182b
182c
60
61d
154c
154
154b
199a
199
520
528
183
61c
157a
154d
172
55
72
182b
60
153
153a
271
521
270
155
184
523
522d
72a
117a
117b
117
194
193
117d
195a
195
193a
117c
184c
184a
105
105d
105e
105f
104a
104
49a
49
118
66b
66a
67c
67
66c
66
67b
67a
46a
46
12a
26a
26
488
TM061885

O-ring

Pos.	Range	Poles	Power				
		12			350~450 kW	500 kW	
		14	200~250 kW	300 kW	350~375 kW	450 kW	500~600 kW
		16	200 kW	250~300 kW	350 kW		400 kW
	Description/Kit No		*98843415*	*98843416*	*98843417*	*98843418*	*98843419*
49a	O-ring	3.5 x 130.0	1	1	-	-	-
		3.5 x 140.0	-	-	1	-	-
		5.7 x 150.0	-	-	-	1	1
61d	O-ring	5.7 x 180.0	1	-	-	-	-
		5.7 x 215.0	-	1	1	1	1
66b	O-ring	5.7 x 180.0	1	1	1	1	1
66c	O-ring	5.7 x 200.0	1	1	1	1	1
67b	O-ring	3.1 x 40.0	1	1	1	1	1
67c	O-ring	3.1 x 42.0	1	1	1	1	1
157d	O-ring [1)]	3.5 x 130.0	4	4	4	4	4
157e	O-ring	3.5 x 80.0	1	1	1	1	1
165	O-ring	5.7 x 400.0	1	1	1	1	1
72	O-ring	8.4 x 820.0	1	1	1	1	1
72a	O-ring	8.4 x 810.0	1	1	1	1	1
104a	O-ring	3.5 x 130.0	1	1	-	-	-
		3.5 x 140.0	-	-	1	-	-
		5.7 x 150.0	-	-	-	1	1
105b	O-ring	5.7 x 150.0	1	1	-	-	-
		5.7 x 170.0	-	-	1	1	1
105c	O-ring	5.7 x 210.0	1	1	-	-	-
		5.7 x 230.0	-	-	1	1	1
106a	O-ring	3.5 x 115.0	1	1	-	-	-
		3.5 x 125.0	-	-	1	-	-
		3.5 x 135.0	-	-	-	1	1
154b	Lip seal	TC-13516514	1	-	-	-	-
		TC-16019014	-	1	1	1	1
154c	O-ring	5.7 x 180.0	1	-	-	-	-
		5.7 x 215.0	-	1	1	1	1
157	O-ring	8.4 x 670.0	1	-	-	-	-
		8.4 x 750.0	-	1	1	1	-
		8.4 x 850.0	-	-	-	-	1
157a	O-ring	8.4 x 702.0	1	-	-	-	-
		8.4 x 782.0	-	1	1	1	-
		8.4 x 882.0	-	-	-	-	1
194	O-ring	3.1 x 16.0	1	1	1	1	1
195a	O-ring	3.1 x 22.0	1	1	1	1	1
488	O-ring	12.0 x 1330.0	1	1	1	1	1

1) More O-rings might be supplied than the mentioned numbers.

Power Lock

Pos.	Range	Poles	Power		
		12	-	350~450 kW	500 kW
		14	200~300 kW	350~375 kW	450~600 kW
		16	200~300 kW	350 kW	400 kW
	Description/Kit No		*98843316*	*98843317*	*98843318*
118	Power Lock		1	1	1

Sensor Cable

Without cable bush

Pos.	Description	Cable diameter	Length		
			10 m	15 m	20 m
252	8 x 2.5 mm^2	23	*98843218*	*98843240*	*98843262*
	11 x 2.5 mm^2	23	*98843219*	*98843241*	*98843263*

Sensor Cable bush

Pos.	Description/Kit No	*98843287*
250b	Rubber seal	2
	Washer	2

O-ring for oil plugs

Pos.	Description/Kit No		*98843384*
194	O-ring	3.1 x 16.0	1
195a	O-ring	3.1 x 22.0	1

Turbulence Optimizer

Pos.	Description/Kit No	*98843331*
117a	Turbulence Optimizer	1
117b	Socket screw	12
	Washer	24

Wear ring

Pos.	Description/Kit No	*98843364*
46	Wear ring	1
46a	Screw	4

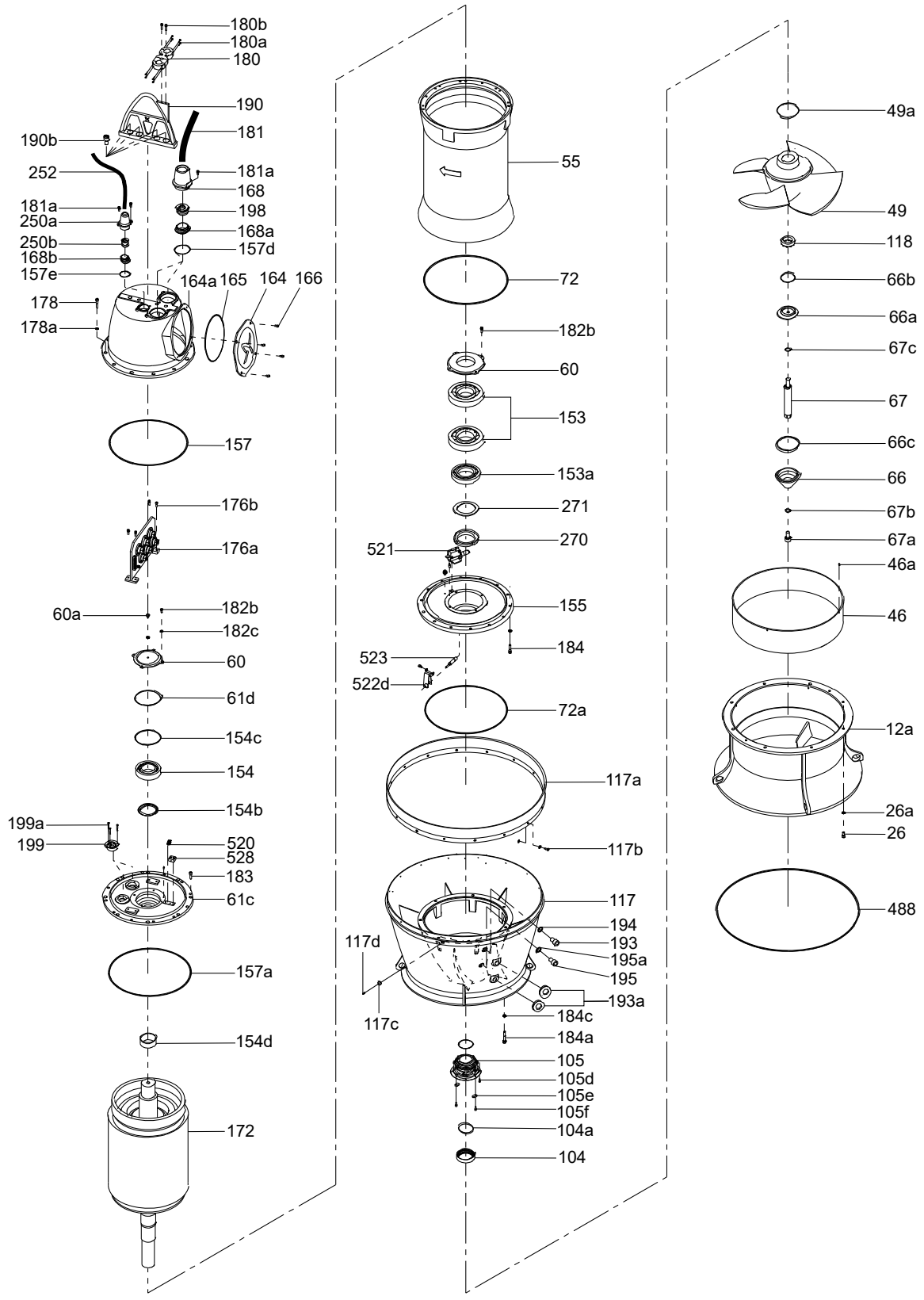
180b
180a
180
190
181
190b
252
181a
168
181a
198
250a
168a
250b
157d
168b
157e
164a
165
164
166
178
178a
157
176b
176a
60a
182b
182c
60
61d
154c
154
154b
199a
199
520
528
183
61c
157a
154d
172
55
72
182b
60
153
153a
271
521
270
155
184
523
522d
72a
117a
117b
117
194
117d
193
195a
195
193a
117c
184c
184a
105
105d
105e
105f
104a
104
49a
49
118
66b
66a
67c
67
66c
66
67b
67a
46a
46
12a
26a
26
488
TM061885

KWM 600

Cable

Without cable bush

Pos.	Description	Cable diameter	Voltage	Length		
				10 m	15 m	20 m
181	3 x 25 + 1 x 16 + 4 x 1.5 mm^2	32	0.6/1 kV	*98843205*	*98843227*	*98843249*
	3 x 35 + 1 x 25 + 4 x 1.5 mm^2	32	0.6/1 kV	*98843206*	*98843228*	*98843250*
	3 x 50 + 1 x 35 + 4 x 1.5 mm^2	45	0.6/1 kV	*98843207*	*98843229*	*98843251*
	4 x 70 mm^2	50	0.6/1 kV	*98843208*	*98843230*	*98843252*
	6 x 16 + 1 x 10 + 6 x 1.5 mm^2	34	0.6/1 kV	*98843190*	*98843222*	*98843244*
	6 x 25 + 1 x 16 + 6 x 1.5 mm^2	42	0.6/1 kV	*98843201*	*98843223*	*98843245*
	6 x 35 + 1 x 25 + 6 x 1.5 mm^2	45	0.6/1 kV	*98843202*	*98843224*	*98843246*

Cable bush

Pos.	Cable diameter	32	34	42	45	50
	Description/Kit No	***98843271***	***98843272***	***98843273***	***98843274***	***98843275***
198	Rubber seal	2	2	2	2	2
	Washer	2	2	2	2	2

Bearing

Pos.	Range	Poles	Power
		4	**37~65 kW**
		6	**30~45 kW**
	Description/Kit No		***98843489***
153	Lower bearing		1
	Lower bearing 2nd		1
154	Upper bearing		1
154a	Sleeve		1
154b	Lip seal		1
187	Circlip		1
-	Set screw		2

Cartridge Shaft seal kit

Pos.	Description/Kit No	***98843292***
105	Mechanical seal unit	1
-	Cartridge unit	1

Outlet casing protector

Pos.	Description/Kit No	***98843346***
117c	Outlet casing protector	6
117d	Socket screw	6

O-ring for oil plugs

Pos.	Description/Kit No		***98843383***
194	O-ring	3.1 x 16.0	1
195a	O-ring	3.1 x 16.0	1

Power Lock

Pos.	Description/Kit No	***98843307***
118	Power Lock	1

Sensor Cable bush

Pos.	Description/Kit No	***98843287***
250b	Rubber seal	2
	Washer	2

Turbulence Optimizer

Pos.	Description/Kit No	*98843323*
117a	Turbulence Optimizer	1
117b	Socket screw	10
	Washer	20

Wear ring

Pos.	Description/Kit No	Pressure	
		M	H
		98843367	*98843368*
46	Wear ring	1	1
46a	Screw	4	4

O-ring

Pos.	Description/Kit No		*98843431*
49a	O-ring	3.5 x 70.0	1
66b	O-ring	3.5 x 74.0	1
67b	O-ring	2.4 x 16.0	1
72	O-ring	5.7 x 340.0	1
72a	O-ring	5.7 x 335.0	1
104a	O-ring	3.5 x 70.0	1
105b	O-ring	3.5 x 85.0	1
105c	O-ring	3.5 x 139.0	1
106a	O-ring	3.5 x 55.0	1
110a	O-ring [1)]	3.5 x 70.0	1
154b	Lip seal	TC-9012012	1
157	O-ring	5.7 x 363.0	1
157a	O-ring	5.7 x 384.0	1
157d	O-ring	3.5 x 85.0	1
157e	O-ring	3.5 x 70.0	1
165	O-ring	5.7 x 220.0	1
194	O-ring	3.1 x 16.0	1
195a	O-ring	3.1 x 16.0	1
488	O-ring	8.4 x 470.0	1

1) More O-rings might be supplied than the mentioned numbers.

Sensor Cable

Without cable bush

Pos.	Description	Cable diameter	Length		
			10 m	15 m	20 m
252	8 x 2.5 mm^2	23	*98843218*	*98843240*	*98843262*
	11 x 2.5 mm^2	23	*98843219*	*98843241*	*98843263*

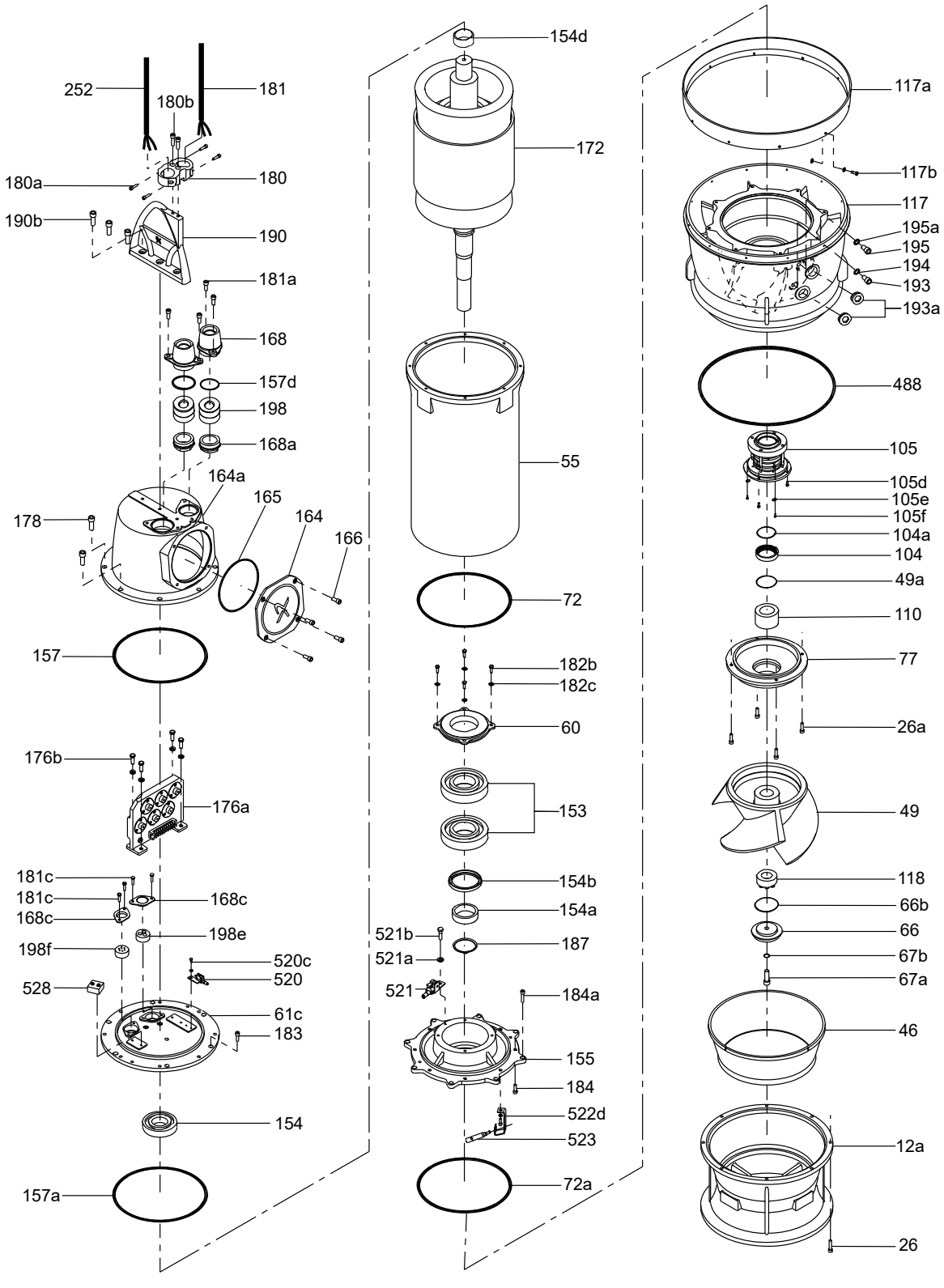
252
180b
181
180a
180
190b
190
181a
168
157d
198
168a
164a
165
164
166
178
157
176b
176a
181c
181c
168c
168c
198e
198f
520c
520
528
61c
183
154
157a
154d
172
55
72
182b
182c
60
153
154b
154a
521b
187
521a
521
184a
155
184
522d
523
72a
117a
117b
117
195a
195
194
193
193a
488
105
105d
105e
105f
104a
104
49a
110
77
26a
49
118
66b
66
67b
67a
46
12a
26
TM060239

KWM 700

Cable

Without cable bush

Pos.	Description	Cable diameter	Voltage	Length		
				10 m	15 m	20 m
181	3 x 25 + 1 x 16 + 4 x 1.5 mm^2	32	0.6/1 kV	*98843205*	*98843227*	*98843249*
	3 x 35 + 1 x 25 + 4 x 1.5 mm^2	32	0.6/1 kV	*98843206*	*98843228*	*98843250*
	3 x 50 + 1 x 35 + 4 x 1.5 mm^2	45	0.6/1 kV	*98843207*	*98843229*	*98843251*
	4 x 70 mm^2	50	0.6/1 kV	*98843208*	*98843230*	*98843252*
	6 x 16 + 1 x 10 + 6 x 1.5 mm^2	34	0.6/1 kV	*98843190*	*98843222*	*98843244*
	6 x 25 + 1 x 16 + 6 x 1.5 mm^2	42	0.6/1 kV	*98843201*	*98843223*	*98843245*
	6 x 35 + 1 x 25 + 6 x 1.5 mm^2	45	0.6/1 kV	*98843202*	*98843224*	*98843246*

Cable bush

Pos.	Cable diameter	32	34	42	45	50
	Description/Kit No	*98843271*	*98843272*	*98843273*	*98843274*	*98843275*
198	Rubber seal	2	2	2	2	2
Washer	2	2	2	2	2	

Bearing

Pos.	Range	Poles	Power		
		4	75 kW		90~110 kW
		6	37~55 kW		75~90 kW
		8	37 kW	45~55 kW	75 kW
	Description/Kit No		*98843490*	*98843491*	*98843492*
153	Lower bearing		1	1	1
	Lower bearing 2nd		1	1	1
154	Upper bearing		1	1	1
154a	Sleeve		1	1	1
154b	Lip seal		1	1	1
187	Circlip		1	1	1
-	Set screw		2	2	2

Cartridge Shaft seal kit

Pos.	Range	Poles	Power	
		4	75 kW	90~110 kW
		6	37~55 kW	75~90 kW
		8	37~55 kW	75 kW
	Description/Kit No		*98843292*	*98843293*
105	Mechanical seal unit		1	1
-	Cartridge unit		1	1

Outlet casing protector

Pos.	Description/Kit No	*98843347*
117c	Outlet casing protector	6
117d	Socket screw	6

Non return valve

Pos.	Description/Kit No	*98843385*
196	Non return valve	1
	Nipple	1

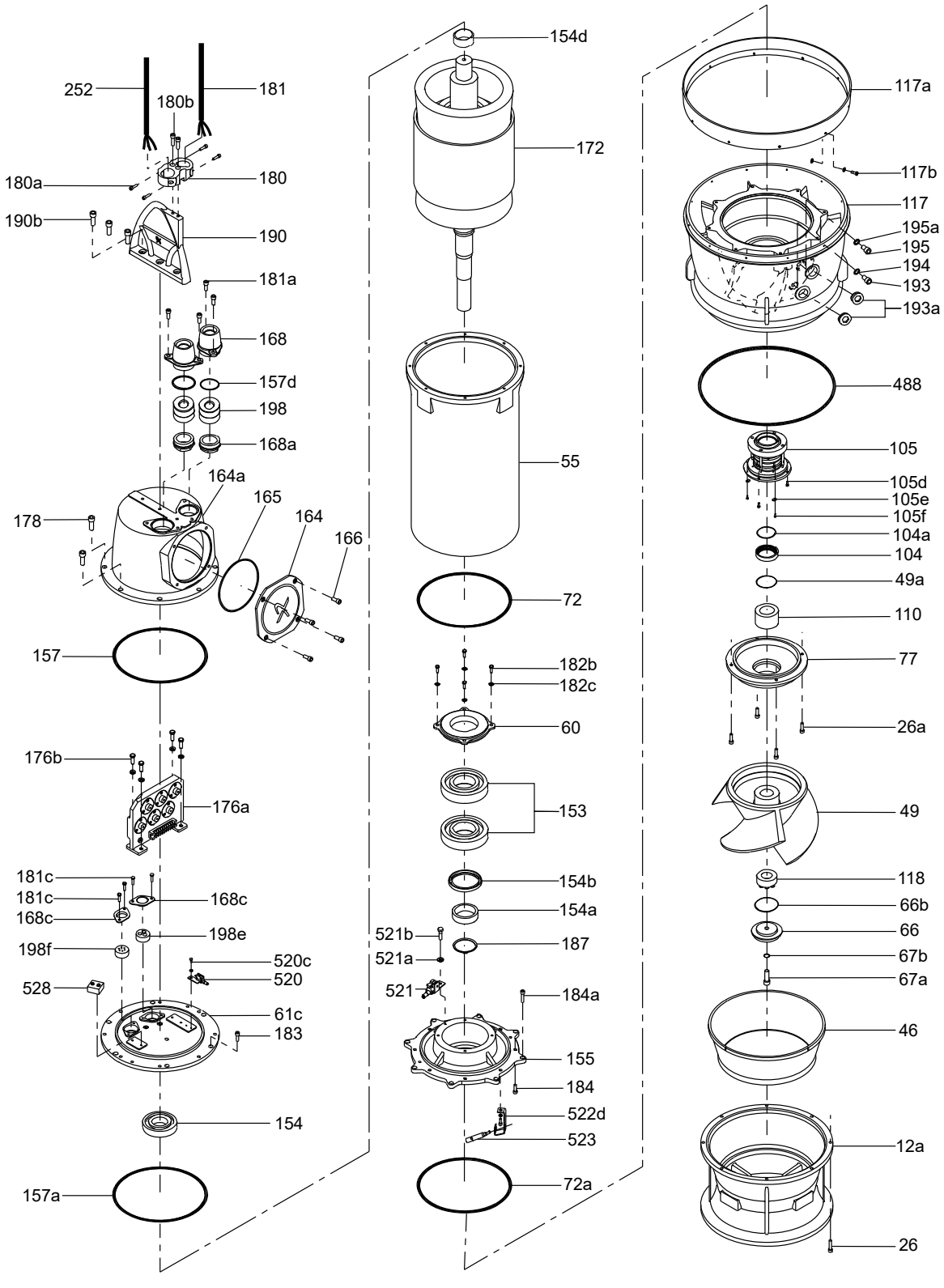
252
180b
181
180a
180
190b
190
181a
168
157d
198
168a
164a
165
164
166
178
157
176b
176a
181c
181c
168c
168c
198e
198f
520c
520
528
61c
183
154
157a
154d
172
55
72
182b
182c
60
153
154b
154a
521b
187
521a
521
184a
155
184
522d
523
72a
117a
117b
117
195a
195
194
193
193a
488
105
105d
105e
105f
104a
104
49a
110
77
26a
49
118
66b
66
67b
67a
46
12a
26
TM060239

O-ring

Pos.	Range	Poles	Power		
		4	75 kW		90~110 kW
		6	37~55 kW		75~90 kW
		8	37 kW	45~55 kW	
	Description/Kit No		*98843432*	*98843433*	*98843434*
49a	O-ring	3.5 x 70.0	1	1	-
		3.5 x 80.0	-	-	1
66b	O-ring	3.5 x 84.0	1	1	1
67b	O-ring	2.4 x 22.0	1	1	1
72	O-ring	5.7 x 370.0	1	1	1
72a	O-ring	5.7 x 355.0	1	1	1
104a	O-ring	3.5 x 70.0	1	1	-
		3.5 x 80.0	-	-	1
105b	O-ring	3.5 x 85.0	1	1	-
		3.5 x 100.0	-	-	1
105c	O-ring	3.5 x 139.0	1	1	-
		5.7 x 150.0	-	-	1
106a	O-ring	3.5 x 55.0	1	1	-
		3.5 x 65.0	-	-	1
110a	O-ring [1)]	3.5 x 70.0	1	1	-
		3.5 x 80.0	-	-	1
154b	Lip seal	TC-9512013	1	1	-
		TC-10513514	-	-	1
157	O-ring	5.7 x 363.0	1	1	1
157a	O-ring	5.7 x 384.0	1	-	-
		5.7 x 414.0	-	1	1
157d	O-ring	3.5 x 85.0	1	1	1
157e	O-ring	3.5 x 70.0	1	1	1
165	O-ring	5.7 x 220.0	1	1	1
194	O-ring	3.1 x 16.0	1	1	1
195a	O-ring	3.1 x 22.0	1	1	1
488	O-ring	12.0 x 570.0	1	1	1

1) More O-rings might be supplied than the mentioned numbers.

O-ring for oil plugs

Pos.	Description/Kit No		*98843384*
194	O-ring	3.1 x 16.0	1
195a	O-ring	3.1 x 22.0	1

Power Lock

Pos.	Range	Poles	Power	
		4	75 kW	90~110 kW
		6	37~55 kW	75~90 kW
		8	37~55 kW	75 kW
	Description/Kit No		*98843309*	*98843310*
118	Power Lock		1	1

Sensor Cable bush

Pos.	Description/Kit No	*98843287*
250b	Rubber seal	2
	Washer	2

Turbulence Optimizer

Pos.	Description/Kit No	*98843325*
117a	Turbulence Optimizer	1
117b	Socket screw	10
	Washer	20

Wear ring

Pos.	Description/Kit No	Pressure		
		M_1 [1)]	M_2 [2)]	H
		98843369	*98843370*	*98843371*
46	Wear ring	1	1	1
46a	Screw	4	4	4

1) M_1 = impeller dia.455~445

2) M_2 = impeller dia.435~410

Sensor Cable

Without cable bush

Pos.	Description	Cable diameter	Length		
			10 m	15 m	20 m
252	8 x 2.5 mm^2	23	*98843218*	*98843240*	*98843262*
	11 x 2.5 mm^2	23	*98843219*	*98843241*	*98843263*

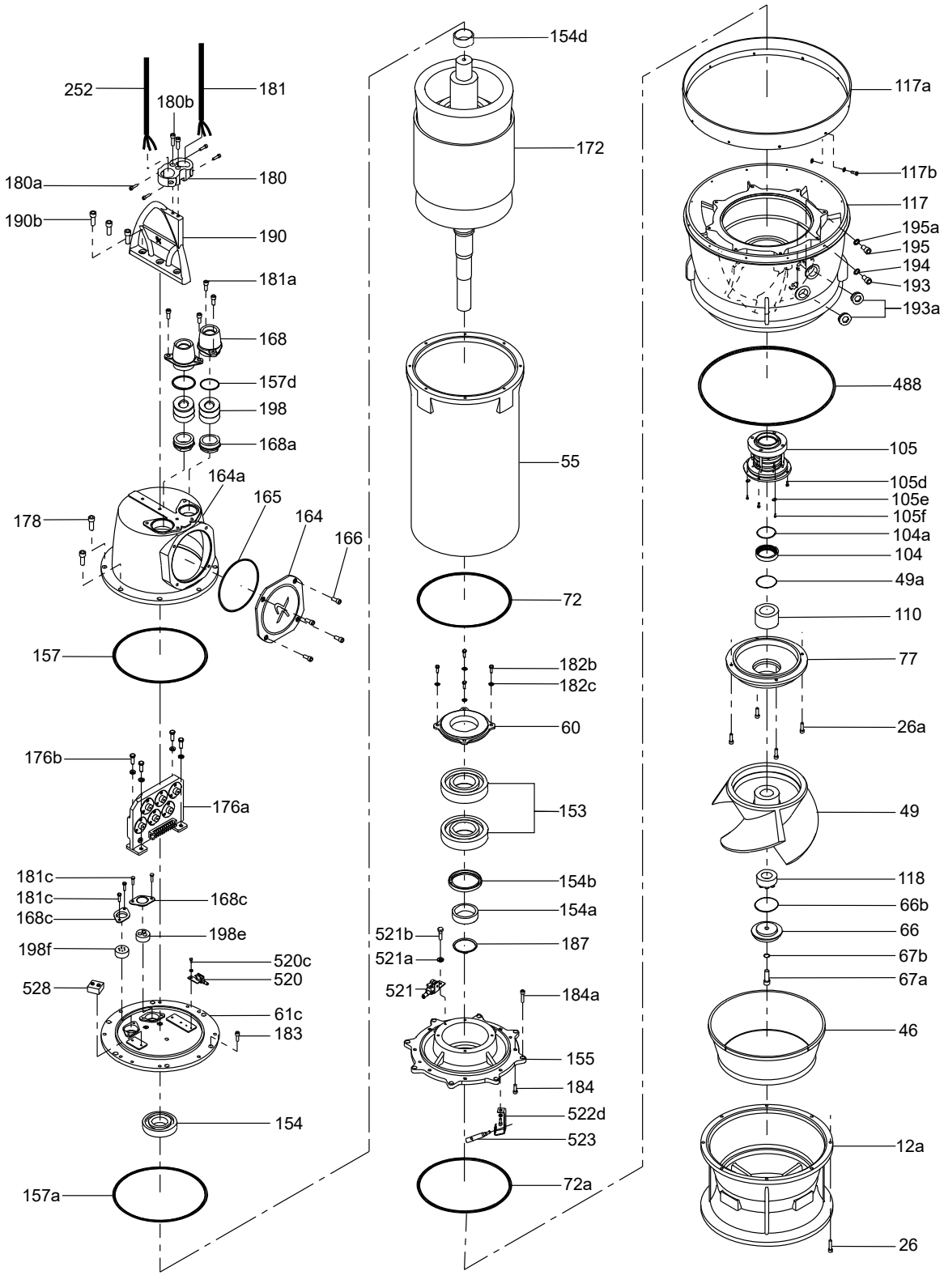
252
180b
181
180a
180
190b
190
181a
168
157d
198
168a
164a
165
164
166
178
157
176b
176a
181c
181c
168c
168c
198e
198f
520c
520
528
61c
183
154
157a
154d
172
55
72
182b
182c
60
153
154b
154a
521b
521a
187
521
184a
155
184
522d
523
72a
117a
117b
117
195a
195
194
193
193a
488
105
105d
105e
105f
104a
104
49a
110
77
26a
49
118
66b
66
67b
67a
46
12a
26
TM060239

KWM 800

Cable

Without cable bush

Pos.	Description	Cable diameter	Length			
			Voltage	10 m	15 m	20 m
181	3 x 35 + 1 x 25 + 4 x 1.5 mm^2	32	0.6/1 kV	*98843206*	*98843228*	*98843250*
	3 x 50 + 1 x 35 + 4 x 1.5 mm^2	45	0.6/1 kV	*98843207*	*98843229*	*98843251*
	4 x 70 mm^2	50	0.6/1 kV	*98843208*	*98843230*	*98843252*
	4 x 95 mm^2	56	0.6/1 kV	*98843209*	*98843231*	*98843253*
	4 x 120 mm^2	65	0.6/1 kV	*98843210*	*98843232*	*98843254*
	6 x 25 + 1 x 16 + 6 x 1.5 mm^2	42	0.6/1 kV	*98843201*	*98843223*	*98843245*
	6 x 35 + 1 x 25 + 6 x 1.5 mm^2	45	0.6/1 kV	*98843202*	*98843224*	*98843246*
	4 x 35 mm^2	50	3.3 kV	*98843211*	*98843233*	*98843255*
	4 x 35 mm^2	65	6.6 kV	*98843215*	*98843237*	*98843259*

Cable bush (90~110 kW 6P, 75~90 kW 8P)

Pos.	Cable diameter	32	42	45	50
	Description/Kit No	***98843271***	***98843273***	***98843274***	***98843275***
198	Rubber seal	2	2	2	2
	Washer	2	2	2	2

Cable bush (0.6/1 kV 132~160 kW 6P,110 kW 8P)

Pos.	Cable diameter	45	50	56	65
	Description/Kit No	***98843279***	***98843280***	***98843281***	***98843284***
198	Rubber seal	2	2	2	2
	Washer	2	2	2	2

Cable bush (over 3.3 kV)

Pos.	Cable diameter	50	65
	Description/Kit No	***98843282***	***98843284***
198	Rubber seal	2	2
	Washer	2	2

Bearing

Pos.	Range	Poles	Power	
		6	90~110 kW	132~160 kW
		8	75~90 kW	110 kW
	Description/Kit No		***98843493***	***98843494***
153	Lower bearing		2	2
153a	Lower bearing 2nd		1	1
154	Upper bearing		1	1
154b	Lip seal			1
154d	Sleeve			1
270	Bearing NJt		1	1
271	Bearing washer		1	1

Cartridge Shaft seal kit

Pos.	Range	Poles	Power	
		6	90~110 kW	132~160 kW
		8	75~90 kW	110 kW
	Description/Kit No		***98843293***	***98843294***
105	Mechanical seal unit		1	1
-	Cartridge unit		1	1

Outlet casing protector

Pos.	Description/Kit No	***98843348***
117c	Outlet casing protector	6
117d	Socket screw	6

Non return valve

Pos.	Description/Kit No	***98843385***
196	Non return valve	1
	Nipple	1

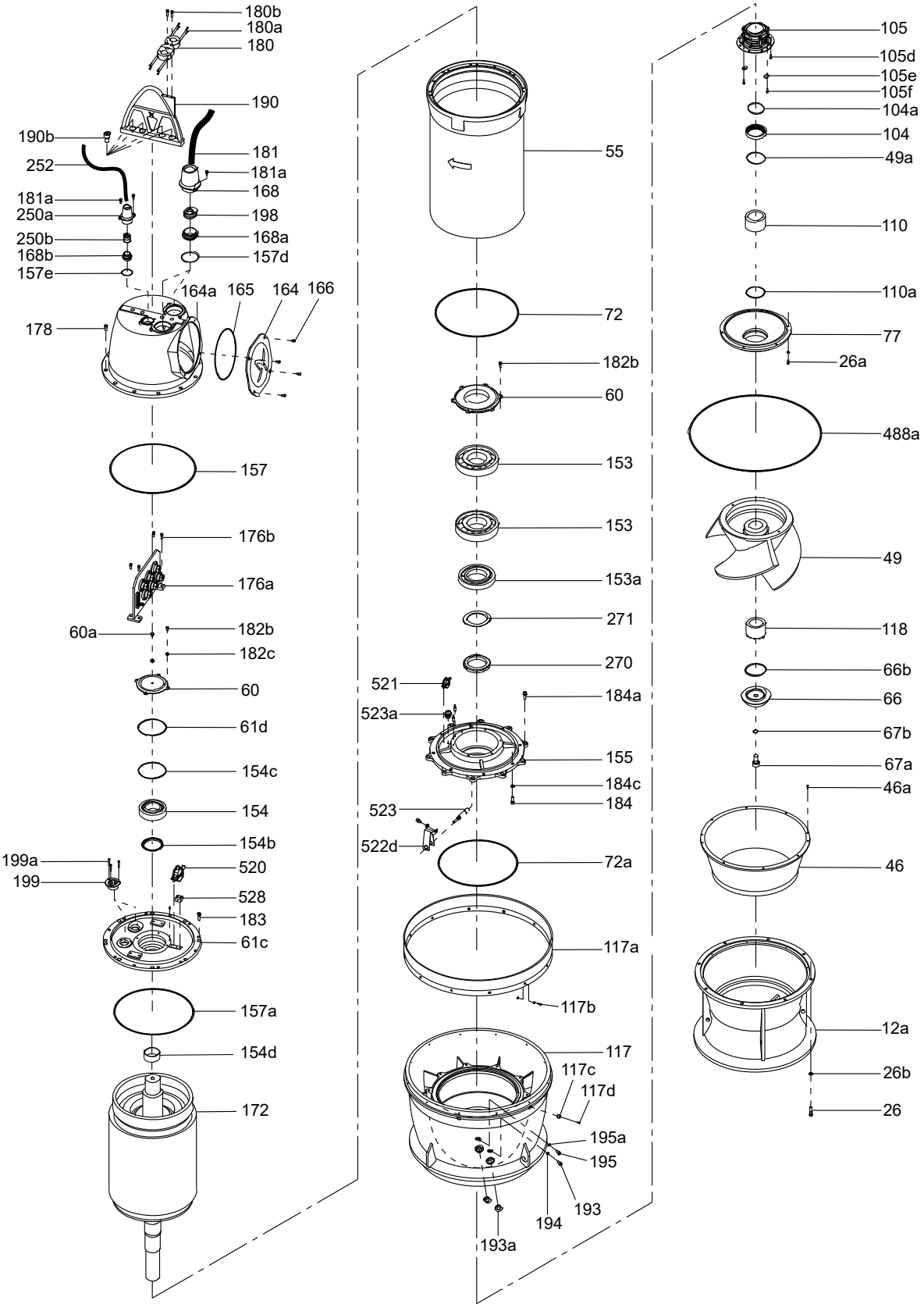
180b
180a
180
190
190b
181
252
181a
181a
168
250a
198
250b
168a
168b
157d
157e
164a
165
164
166
178
157
176b
176a
60a
182b
182c
60
61d
154c
154
154b
199a
520
199
528
183
61c
157a
154d
172
55
72
182b
60
153
153
153a
271
270
521
184a
523a
155
184c
184
523
522d
72a
117a
117b
117
117c
117d
195a
195
193
194
193a
105
105d
105e
105f
104a
104
49a
110
110a
77
26a
488a
49
118
66b
66
67b
67a
46a
46
12a
26b
26
TM060240

O-ring

Pos.	Range	Poles	Power	
		6	90~110 kW	132~160 kW
		8	75~90 kW	110 kW
	Description/Kit No		98843435	98843436
49a	O-ring	3.5 x 80.0	1	-
		3.5 x 90.0	-	1
61d	O-ring	5.7 x 160.0	-	1
66b	O-ring	3.5 x 104.0	1	1
67c	O-ring	2.4 x 22.0	1	1
72	O-ring	5.7 x 480.0	1	1
72a	O-ring	8.4 x 480.0	1	1
104a	O-ring	3.5 x 80.0	1	-
		3.5 x 90.0	-	1
105b	O-ring	3.5 x 100.0	1	-
		3.5 x 120.0	-	1
105c	O-ring	5.7 x 150.0	1	-
		5.7 x 175.0	-	1
106a	O-ring	3.5 x 65.0	1	-
		3.5 x 75.0	-	1
110a	O-ring [1)]	3.5 x 80.0	1	-
		3.5 x 90.0	-	1
154b	Lip seal	TC-12014011	-	1
154c	O-ring	5.7 x 160.0	-	1
157	O-ring	5.7 x 363.0	1	-
		8.4 x 488.0	-	1
157a	O-ring	5.7 x 414.0	1	-
	O-ring	5.7 x 527.0	-	1
157e	O-ring	3.5 x 70.0	1	-
		3.5 x 80.0	-	1
157d	O-ring [2)]	3.5 x 85.0	1	-
		3.5 x 130.0	-	2
165	O-ring	5.7 x 220.0	1	-
		5.7 x 280.0	-	1
194	O-ring	3.1 x 22.0	1	1
194a	O-ring	3.1 x 16.0	1	1
488	O-ring	12.0 x 670.0	1	1

1) Needed only in M type pumps

2) More O-rings might be supplied than the mentioned numbers

O-ring for oil plugs

Pos.	Description/Kit No		98843384
194	O-ring	3.1 x 16.0	1
195a	O-ring	3.1 x 22.0	1

Power Lock

Pos.	Range	Poles	Power	
		6	90~110 kW	132~160 kW
		8	75~90 kW	110 kW
	Description/Kit No		98843310	98843311
118	Power Lock		1	1

Sensor Cable bush

Pos.	Description/Kit No	98843287
250b	Rubber seal	2
	Washer	2

Turbulence Optimizer

Pos.	Description/Kit No	98843326
117a	Turbulence Optimizer	1
117b	Socket screw	12
	Washer	24

Wear ring

Pos.	Description/Kit No	Pressure		
		M_1 [3)]	M_2 [4)]	H
		98843372	98843373	98843374
46	Wear ring	1	1	1
46a	Screw	4	4	4

3) M_1 = impeller dia.510~490

4) M_2 = impeller dia. 475~465

Sensor Cable

Without cable bush

Pos.	Description	Cable diameter	Length		
			10 m	15 m	20 m
252	8 x 2.5 mm^2	23	98843218	98843240	98843262
	11 x 2.5 mm^2	23	98843219	98843241	98843263

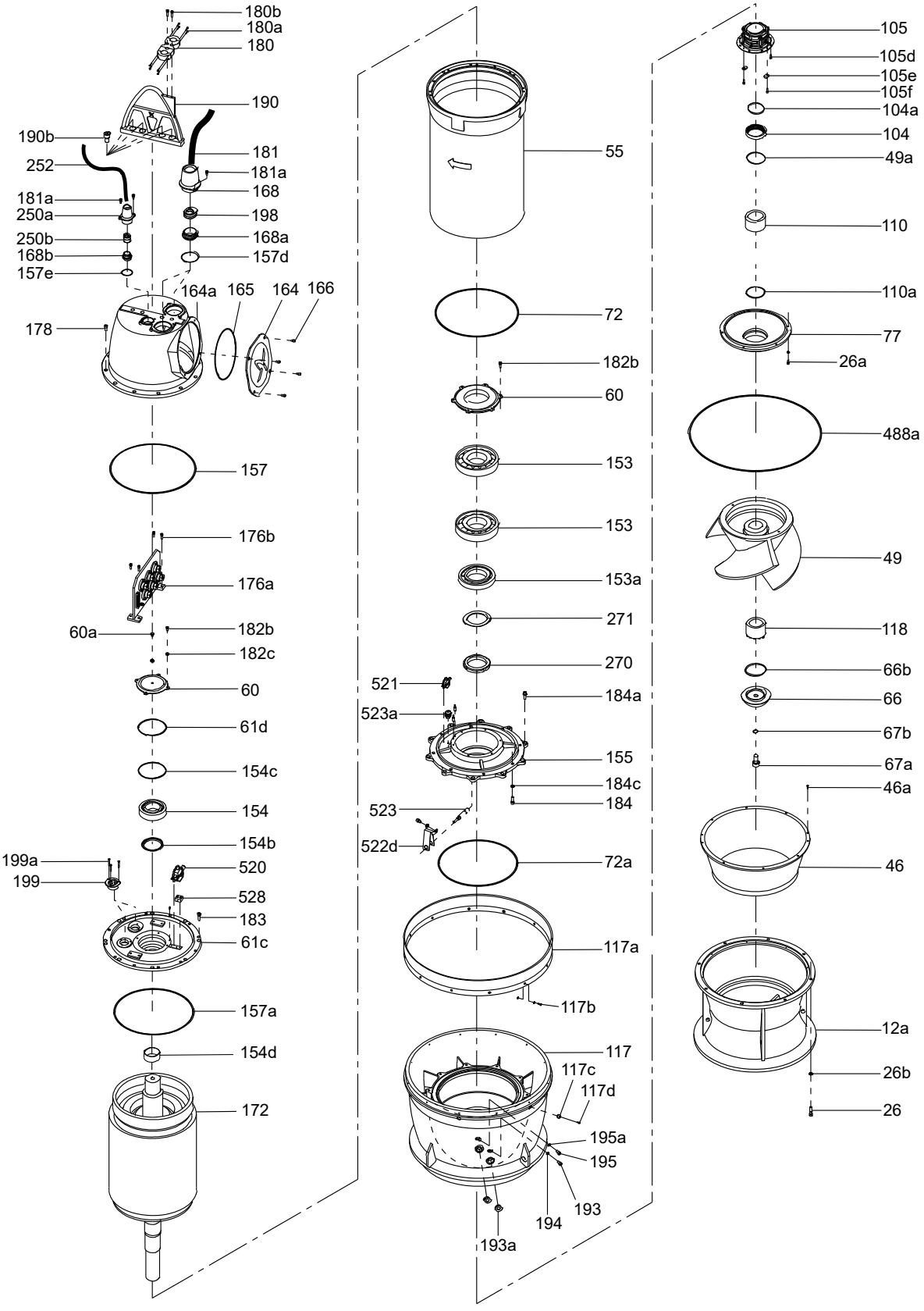
180b
180a
180
190
190b
181
252
181a
181a
168
250a
198
250b
168a
168b
157d
157e
164a
165
164
166
178
157
176b
176a
60a
182b
182c
60
61d
154c
154
154b
199a
520
199
528
183
61c
157a
154d
172
55
72
182b
60
153
153
153a
271
270
521
184a
523a
155
184c
184
523
522d
72a
117a
117b
117
117c
117d
195a
195
193
194
193a
105
105d
105e
105f
104a
104
49a
110
110a
77
26a
488a
49
118
66b
66
67b
67a
46a
46
12a
26b
26
TM060240

KWM 900

Cable

Without cable bush

Pos.	Length			10 m	15 m	20 m
	Description	Cable diameter	Voltage			
181	3 x 50 + 1 x 35 + 4 x 1.5 mm^2	45	0.6/1 kV	*98843207*	*98843229*	*98843251*
	4 x 70 mm^2	50	0.6/1 kV	*98843208*	*98843230*	*98843252*
	4 x 95 mm^2	56	0.6/1 kV	*98843209*	*98843231*	*98843253*
	4 x 120 mm^2	65	0.6/1 kV	*98843210*	*98843232*	*98843254*
	6 x 35 + 1 x 25 + 6 x 1.5 mm^2	45	0.6/1 kV	*98843202*	*98843224*	*98843246*
	4 x 35 mm^2	50	3.3 kV	*98843211*	*98843233*	*98843255*
	4 x 35 mm^2	65	6.6 kV	*98843215*	*98843237*	*98843259*

Cable bush (0.6/1 kV)

Pos.	Cable diameter	45	50	56	65
	Description/Kit No	*98843279*	*98843280*	*98843281*	*98843284*
198	Rubber seal	2	2	2	2
	Washer	2	2	2	2

Bearing

Pos.	Range	Poles	Power	
		6	132~160 kW	200~250 kW
		8	110~160 kW	200~220 kW
	Description/Kit No		*98843495*	*98843496*
153	Lower bearing		2	2
153a	Lower bearing 2nd		1	1
154	Upper bearing		1	1
154b	Lip seal		1	1
154d	Sleeve		1	1
270	Bearing nut		1	1
271	Bearing washer		1	1

Cable bush (over 3.3 kV)

Pos.	Cable diameter	50	65
	Description/Kit No	*98843282*	*98843284*
198	Rubber seal	2	2
	Washer	2	2

Cartridge Shaft seal kit

Pos.	Range	Poles	Power	
		6	132~160 kW	200~250 kW
		8	110~160 kW	200~220 kW
	Description/Kit No		*98843294*	*98843295*
105	Mechanical seal unit		1	1
-	Cartridge unit		1	1

Outlet casing protector

Pos.	Description/Kit No	*98843349*
117c	Outlet casing protector	6
117d	Socket screw	6

Non return valve

Pos.	Description/Kit No	*98843385*
196	Non return valve	1
	Nipple	1

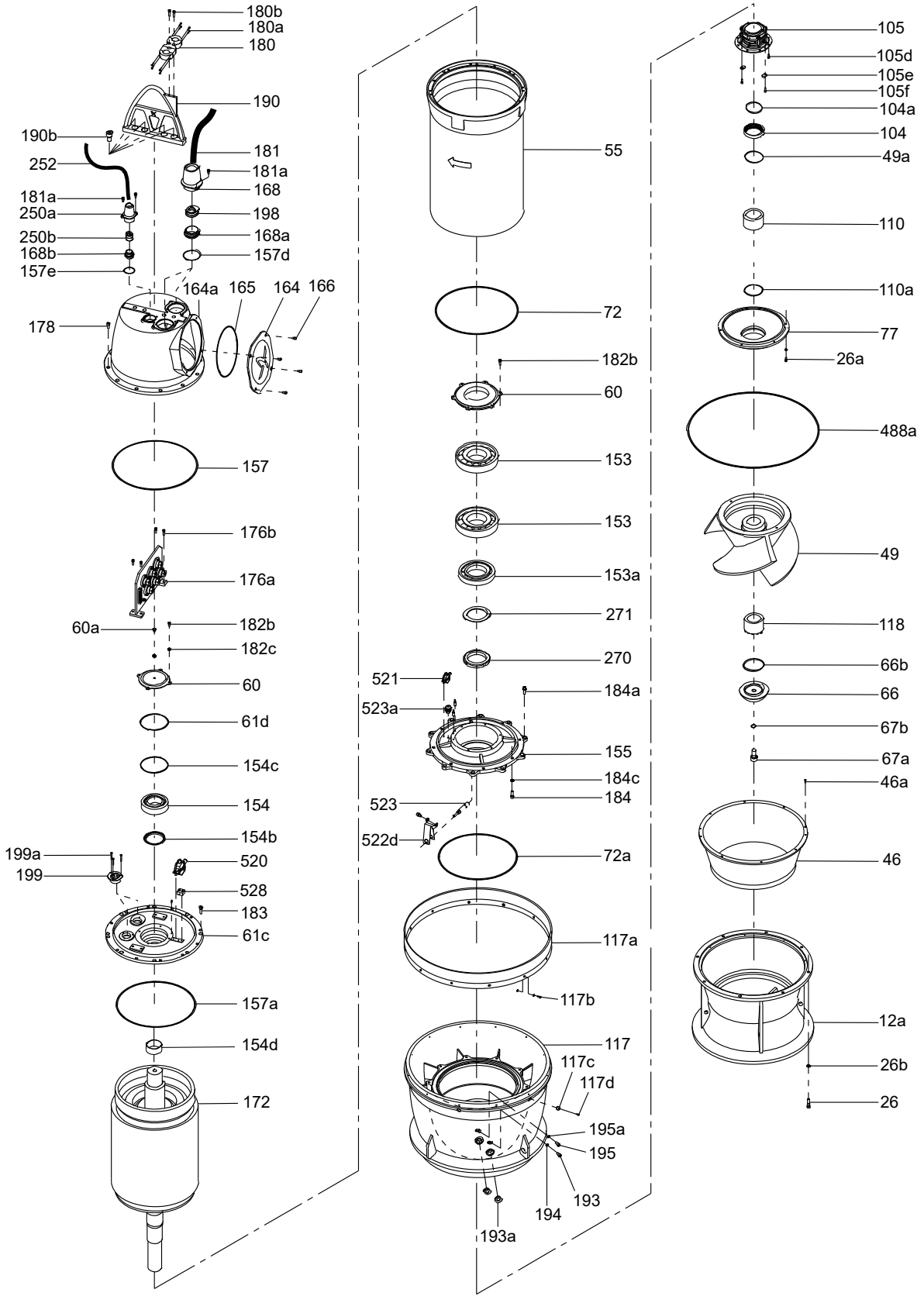
180b
180a
180
190
190b
181
252
181a
181a
168
250a
198
250b
168a
168b
157d
157e
164a
165
164
166
178
157
176b
176a
60a
182b
182c
60
61d
154c
154
154b
199a
520
199
528
183
61c
157a
154d
172
55
72
182b
60
153
153
153a
271
270
521
184a
523a
155
184c
184
523
522d
72a
117a
117b
117
117c
117d
195a
195
193
194
193a
105
105d
105e
105f
104a
104
49a
110
110a
77
26a
488a
49
118
66b
66
67b
67a
46a
46
12a
26b
26
TM060240

O-ring

Pos.	Range	Poles			
		6	132~160 kW		200~250 kW
		8	110 kW	132~160 kW	200~220 kW
	Description/Kit No		*98843437*	*98843438*	*98843439*
49a	O-ring	3.5 x 90.0	1	1	-
		3.5 x 100.0	-	-	1
61d	O-ring	5.7 x 160.0	1	1	1
66c	O-ring	3.5 x 114.0	1	1	1
67c	O-ring	3.1 x 30.0	1	1	1
72	O-ring	8.4 x 505.0	1	1	1
72a	O-ring	8.4 x 480.0	1	1	1
104a	O-ring	3.5 x 90.0	1	1	-
		3.5 x 100.0	-	-	1
105b	O-ring	3.5 x 120.0	1	1	1
105c	O-ring	5.7 x 175.0	1	1	1
106a	O-ring	3.5 x 75.0	1	1	-
		3.5 x 85.0	-	-	1
110a	O-ring	3.5 x 90.0	1	1	-
		3.5 x 100.0	-	-	1
154b	Lip seal	TC-12014011	1	1	1
154c	O-ring	5.7 x 160.0	1	1	1
157	O-ring	8.4 x 488.0	1	-	-
		8.4 x 508.0	-	1	1
157a	O-ring	8.4 x 527.0	1	-	-
		8.4 x 552.0	-	1	1
157d	O-ring [1)]	3.5 x 130.0	2	2	2
157e	O-ring	3.5 x 80.0	1	1	1
165	O-ring	5.7 x 280.0	1	1	1
194	O-ring	3.1 x 16.0	1	1	1
195a	O-ring	3.1 x 22.0	1	1	1
488	O-ring	12.0 x 770.0	1	1	1

1) More O-rings might be supplied than the mentioned numbers.

O-ring for oil plugs

Pos.	Description/Kit No		*98843384*
194	O-ring	3.1 x 16.0	1
195a	O-ring	3.1 x 22.0	1

Sensor Cable bush

Pos.	Description/Kit No	*98843287*
250b	Rubber seal	2
	Washer	2

Turbulence Optimizer

Pos.	Description/Kit No	*98843327*
117a	Turbulence Optimizer	1
117b	Socket screw	12
	Washer	24

Sensor Cable

Without cable bush

Pos.	Description	Cable diameter	Length		
			10 m	15 m	20 m
252	8 x 2.5 mm^2	23	*98843218*	*98843240*	*98843262*
	11 x 2.5 mm^2	23	*98843219*	*98843241*	*98843263*

Power Lock

Pos.	Range	Poles	Power	
		6	132~160 kW	200~250 kW
		8	110~160 kW	200~220 kW
	Description/Kit No		*98843311*	*98843313*
118	Power Lock		1	1

Wear ring

Pos.	Description/Kit No	Pressure	
		M_1 [2)]	M_2 [3)]
		98843375	*98843376*
46	Wear ring	1	1
46a	Screw	4	4

2) M_1 = impeller dia.560~525

3) M_2 = impeller dia. 520~500

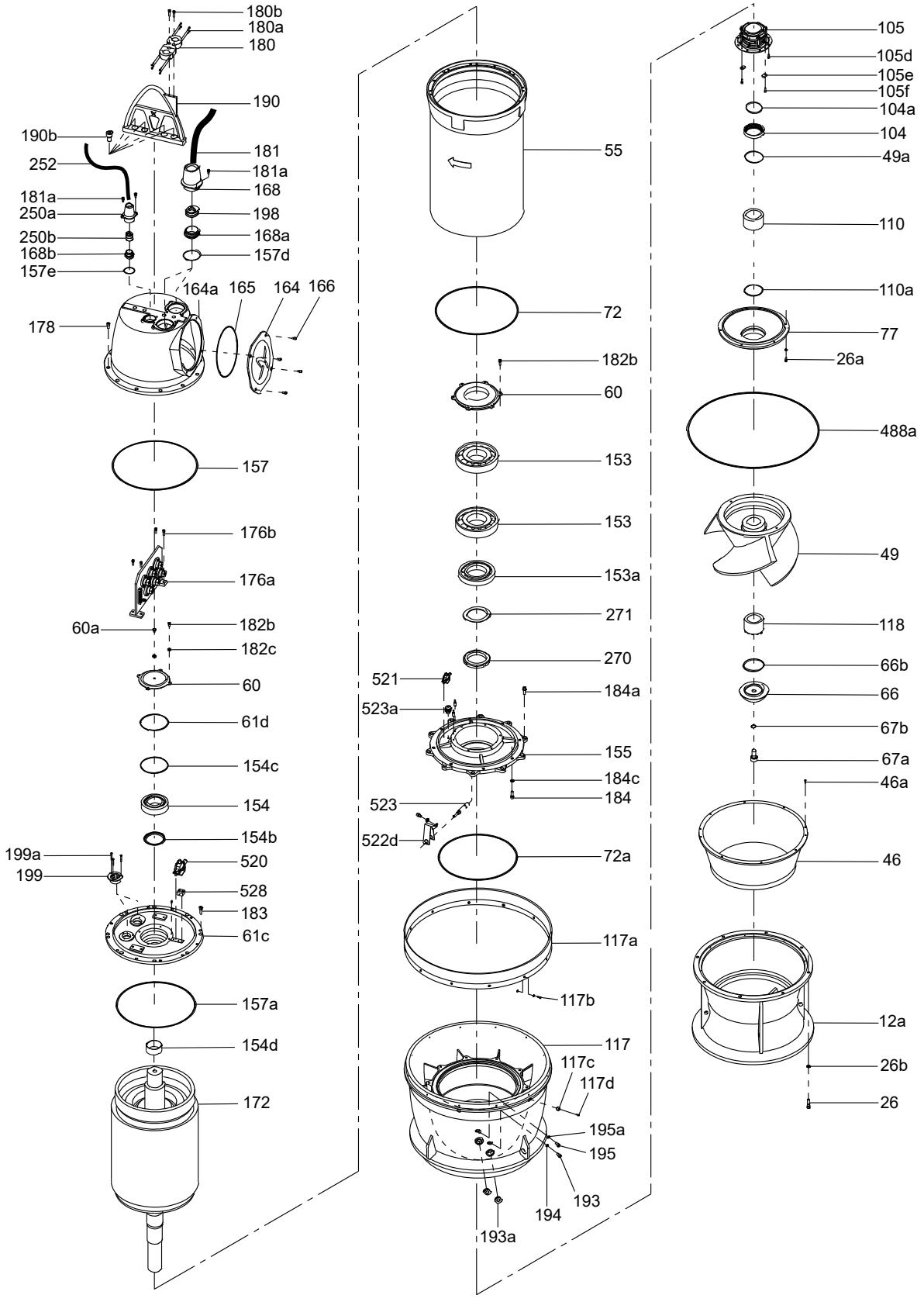
180b
180a
180
190
190b
181
252
181a
181a
168
250a
198
250b
168a
168b
157d
157e
164a
165
164
166
178
157
176b
176a
60a
182b
182c
60
61d
154c
154
154b
199a
520
199
528
183
61c
157a
154d
172
55
72
182b
60
153
153
153a
271
270
521
184a
523a
155
184c
184
523
522d
72a
117a
117b
117
117c
117d
195a
195
193
194
193a
105
105d
105e
105f
104a
104
49a
110
110a
77
26a
488a
49
118
66b
66
67b
67a
46a
46
12a
26b
26
TM060240

KWM 1000

Bearing

Pos.	Range	Poles	Power			
		6	220~250 kW			300~350 kW
		8	200 kW	220 kW		250~300 kW
		10	160 kW		200 kW	220~250 kW
	Description/Kit No		*98843497*	*98843498*	*98843499*	*98843500*
153	Lower bearing		2	2	2	2
153a	Lower bearing 2nd		1	1	1	1
154	Upper bearing		1	1	1	1
154d	Sleeve		1	1	1	1
154b	Lip seal		1	1	1	1
270	Bearing nut		1	1	1	1
271	Bearing washer		1	1	1	1

Cable

Without cable bush

Pos.	Description	Cable diameter	Voltage	Length		
				10 m	15 m	20 m
181	3 x 50 + 1 x 35 + 4 x 1.5 mm^2	45	0.6/1 kV	*98843207*	*98843229*	*98843251*
	4 x 70 mm^2	50	0.6/1 kV	*98843208*	*98843230*	*98843252*
	4 x 95 mm^2	56	0.6/1 kV	*98843209*	*98843231*	*98843253*
	4 x 120 mm^2	65	0.6/1 kV	*98843210*	*98843232*	*98843254*
	6 x 35 + 1 x 25 + 6 x 1.5 mm^2	45	0.6/1 kV	*98843202*	*98843224*	*98843246*
	4 x 35 mm^2	50	3.3 kV	*98843211*	*98843233*	*98843255*
	4 x 35 mm^2	65	6.6 kV	*98843215*	*98843237*	*98843259*

Cable bush (0.6/1 kV)

Pos.	Cable diameter	45	50	56	65
	Description/Kit No	*98843279*	*98843280*	*98843281*	*98843284*
198	Rubber seal	2	2	2	2
	Washer	2	2	2	2

Cable bush (over 3.3 kV)

Pos.	Cable diameter	50	65
	Description/Kit No	*98843282*	*98843284*
198	Rubber seal	2	2
	Washer	2	2

Cartridge Shaft seal kit

Pos.	Range	Poles	Power	
		6	220~250 kW	300~350 kW
		8	200 kW	220~300 kW
		10	160~200 kW	220~250 kW
	Description/Kit No		*98843296*	*98843297*
105	Mechanical seal unit		1	1
-	Cartridge unit		1	1

Outlet casing protector

Pos.	Description/Kit No	*98843350*
117c	Outlet casing protector	6
117d	Socket screw	6

Non return valve

Pos.	Description/Kit No	*98843385*
196	Non return valve	1
	Nipple	1

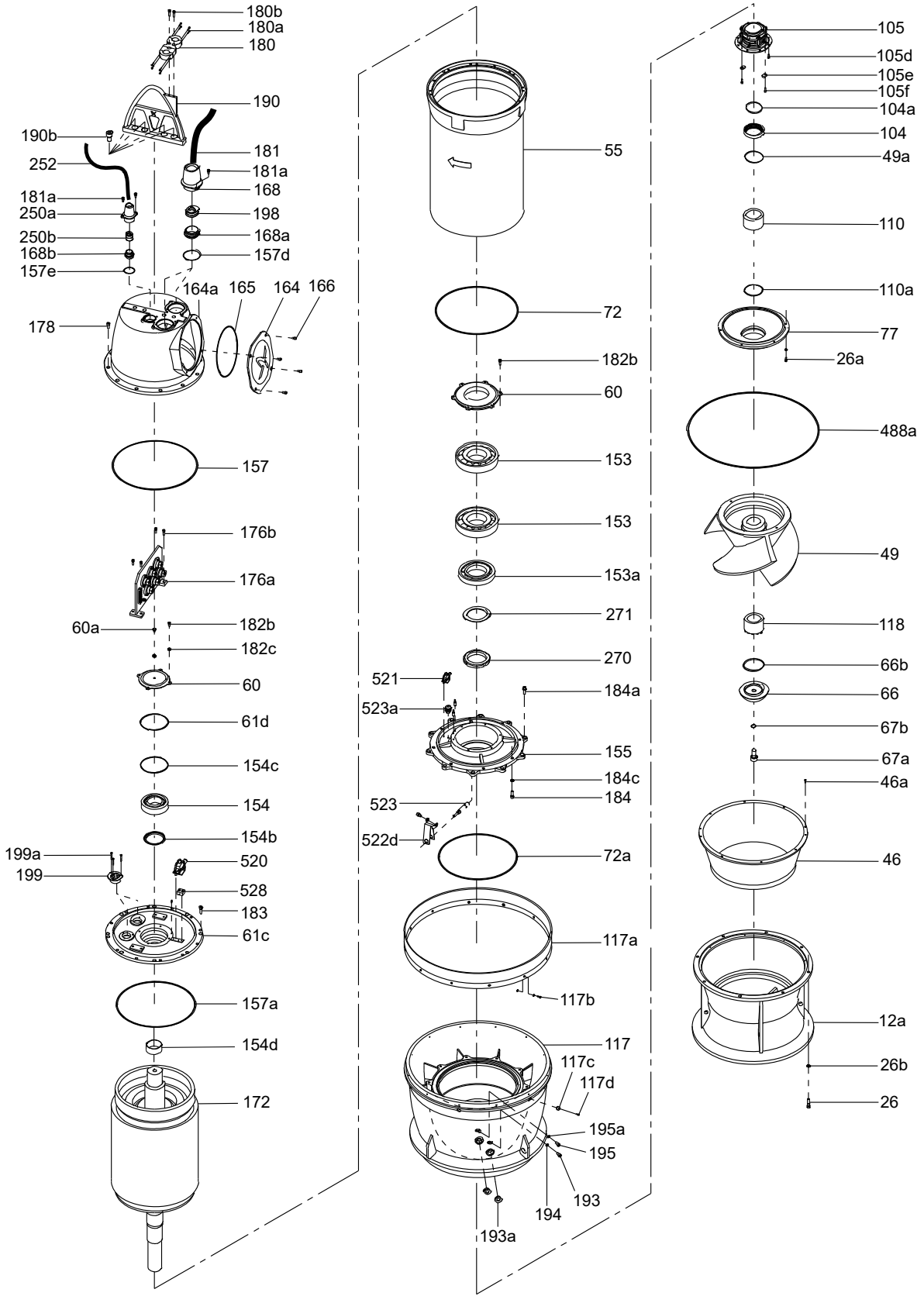
180b
180a
180
190
190b
181
252
181a
181a
168
250a
198
250b
168a
168b
157d
157e
164a
165
164
166
178
157
176b
176a
60a
182b
182c
60
61d
154c
154
154b
199a
520
199
528
183
61c
157a
154d
172
55
72
182b
60
153
153
153a
271
270
521
184a
523a
155
184c
184
523
522d
72a
117a
117b
117
117c
117d
195a
195
193
194
193a
105
105d
105e
105f
104a
104
49a
110
110a
77
26a
488a
49
118
66b
66
67b
67a
46a
46
12a
26b
26
TM060240

O-ring

Pos.	Range	Poles	Power			
		6	220~250 kW			300~350 kW
		8	200 kW	220 kW		250~300 kW
		10			160~200 kW	220~250 kW
	Description/Kit No		98843440	98843441	98843442	98843443
49a	O-ring	3.5 x 100.0	1		1	
		3.5 x 110.0	-	1	-	1
61d	O-ring	5.7 x 160.0	1	1	-	
		5.7 x 180.0	-	-	1	1
66c	O-ring	3.5 x 124.0	1	1	1	1
67c	O-ring	3.1 x 40.0	1	1	1	1
72	O-ring	8.4 x 580.0	1	1	1	1
72a	O-ring	8.4 x 570.0	1	1	1	1
104a	O-ring	3.5 x 100.0	1	-	1	-
		3.5 x 110.0	-	1	-	1
105b	O-ring	3.5 x 130.0	1	1	1	1
105c	O-ring	5.7 x 190.0	1	1	1	1
106a	O-ring	3.5 x 85.0	1	-	1	-
		3.5 x 95.0	-	1	-	1
110a	O-ring [1)]	3.5 x 100.0	1	-	1	-
		3.5 x 110.0	-	1	-	1
154b	Lip seal	TC-12014011	1	1	-	-
		TC-13516514	-	-	1	1
154c	O-ring	5.7 x 160.0	1	1	-	-
		5.7 x 180.0	-	-	1	1
157	O-ring	8.4 x 508.0	1	1	-	-
		8.4 x 605.0		-	1	1
157a	O-ring	8.4 x 552.0	1	1	-	-
		8.4 x 622.0	-	-	1	1
157d	O-ring [2)]	3.5 x 130.0	2	2	2	2
157e	O-ring	3.5 x 80.0	1	1	1	1
165	O-ring	5.7 x 280.0	1	1	1	1
194	O-ring	3.1 x 6.0	1	1	1	1
195a	O-ring	3.1 x 22.0	1	1	1	1
488	O-ring	12.0 x 860.0	1	1	1	1

1) Needed only in M type pumps.

2) More O-rings might be supplied than the mentioned numbers.

O-ring for oil plugs

Pos.	Description/Kit No		98843384
194	O-ring	3.1 x 16.0	1
195a	O-ring	3.1 x 22.0	1

Power Lock

Pos.	Range	Poles	Power	
		6	220~250 kW	300~350 kW
		8	200 kW	220~300 kW
		10	160~200 kW	220~250 kW
	Description/Kit No		98843313	98843314
118	Power Lock		1	1

Sensor Cable bush

Pos.	Description/Kit No		98843287
250b	Rubber seal		2
	Washer		2

Turbulence Optimizer

Pos.	Description/Kit No	*98843328*
117a	Turbulence Optimizer	1
117b	Socket screw	12
	Washer	24

Wear ring

Pos.	Description/Kit No	Pressure	
		M	H
		98843377	*98843378*
46	Wear ring	1	1
46a	Screw	4	4

Sensor Cable

Pos.	Description	Cable diameter	Length		
			10 m	10 m	10 m
252	8 x 2.5 mm^2	23	*98843218*	*98843240*	*98843262*
	11 x 2.5 mm^2	23	*98843219*	*98843241*	*98843263*

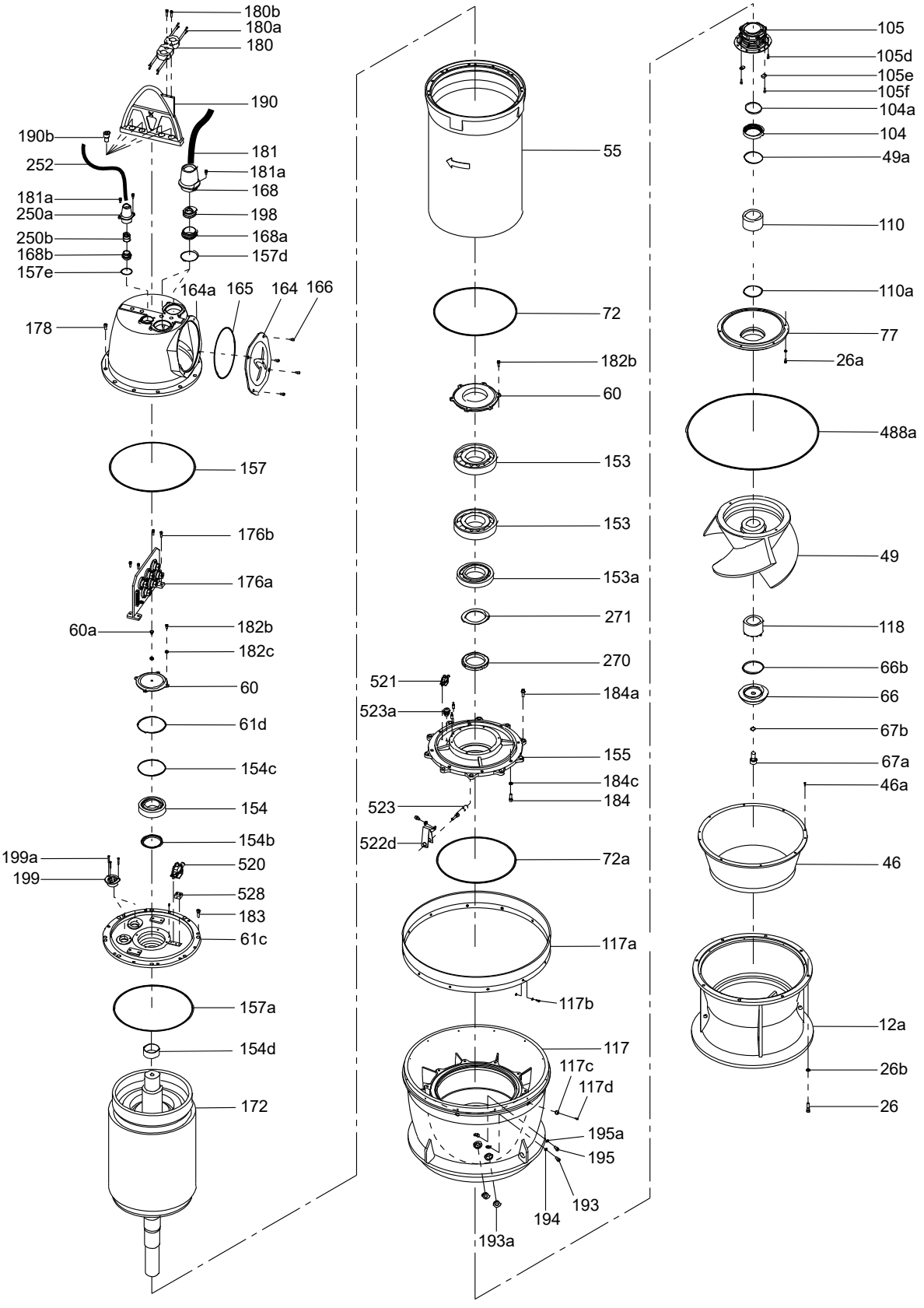
180b
180a
180
190
190b
181
252
181a
181a
168
250a
198
250b
168a
168b
157d
157e
164a
165
164
166
178
157
176b
176a
60a
182b
182c
60
61d
154c
154
154b
199a
520
199
528
183
61c
157a
154d
172
55
72
182b
60
153
153
153a
271
270
521
184a
523a
155
184c
184
523
522d
72a
117a
117b
117
117c
117d
195a
195
193
194
193a
105
105d
105e
105f
104a
104
49a
110
110a
77
26a
488a
49
118
66b
66
67b
67a
46a
46
12a
26b
26
TM060240

KWM 1200

Bearing

Pos.	Range	Poles	Power			
		8		350 kW	400 kW	450~500 kW	550 kW
		10	200~220 kW	250~350 [1] kW	350 [2]~400 kW	450~500 kW	
		12	200~220 kW	250~300 kW	350 kW		
	Description/Kit No		*98843501*	*98843502*	*98843503*	*98843504*	*98843505*
154	Upper bearing		1	1	1	1	1
154d	Sleeve		1	1	1	1	1
153	Lower bearing		2	2	2	2	2
153a	Lower bearing 2nd		1	1	1	1	1
154b	Lip seal		1	1	1	1	1
270	Bearing nut		1	1	1	1	1
271	Bearing washer		1	1	1	1	1

1) 60 Hz
2) 50 Hz

Cable

Without cable bush

Pos.	Description	Out diameter	Voltage	Length		
				10 m	15 m	20 m
181	3 x 50 + 1 x 35 + 4 x 1.5 mm^2	45	0.6/1 kV	*98843207*	*98843229*	*98843251*
	4 x 70 mm^2	50	0.6/1 kV	*98843208*	*98843230*	*98843252*
	4 x 95 mm^2	56	0.6/1 kV	*98843209*	*98843231*	*98843253*
	4 x 120 mm^2	65	0.6/1 kV	*98843210*	*98843232*	*98843254*
	4 x 35 mm^2	50	3.3 kV	*98843211*	*98843233*	*98843255*
	4 x 50 mm^2	56	3.3 kV	*98843212*	*98843234*	*98843256*
	4 x 35 mm^2	65	6.6 kV	*98843215*	*98843237*	*98843259*

Cable bush (0.6/1 kV)

Pos.	Cable diameter	45	50	56	65
	Description/Kit No	*98843279*	*98843280*	*98843281*	*98843284*
198	Rubber seal	2	2	2	2
	Washer	2	2	2	2

Cartridge Shaft seal kit

Pos.	Range	Poles	Power		
		8		350 kW	400~500 kW	550 kW
		10	200~220 kW	250~350 [3] kW	350 [4]~500 kW	
		12	200~220 kW	250~300 kW	350 kW	
	Description/Kit No		*98843297*	*98843298*	*98843299*	*98843300*
105	Mechanical seal unit		1	1	1	1
-	Cartridge unit		1	1	1	1

3) 60 Hz
4) 50 Hz

Cable bush (over 3.3 kV)

Pos.	Cable diameter	50	65
	Description/Kit No	*98843282*	*98843284*
198	Rubber seal	2	2
	Washer	2	2

Outlet casing protector

Pos.	Description/Kit No	*98843351*
117c	Outlet casing protector	6
117d	Socket screw	6

Non return valve

Pos.	Description/Kit No	*98843385*
196	Non return valve	1
	Nipple	1

O-ring for oil plugs

Pos.	Description/Kit No		*98843384*
195a	O-ring	3.1 x 22.0	1
194	O-ring	3.1 x 16.0	1

Sensor Cable

Without cable bush

Pos.	Description	Cable diameter	Length		
			10 m	15 m	20 m
252	8 x 2.5 mm^2	23	*98843218*	*98843240*	*98843262*
	11 x 2.5 mm^2	23	*98843219*	*98843241*	*98843263*

Sensor Cable bush

Pos.	Description/Kit No	*98843287*
250b	Rubber seal	2
	Washer	2

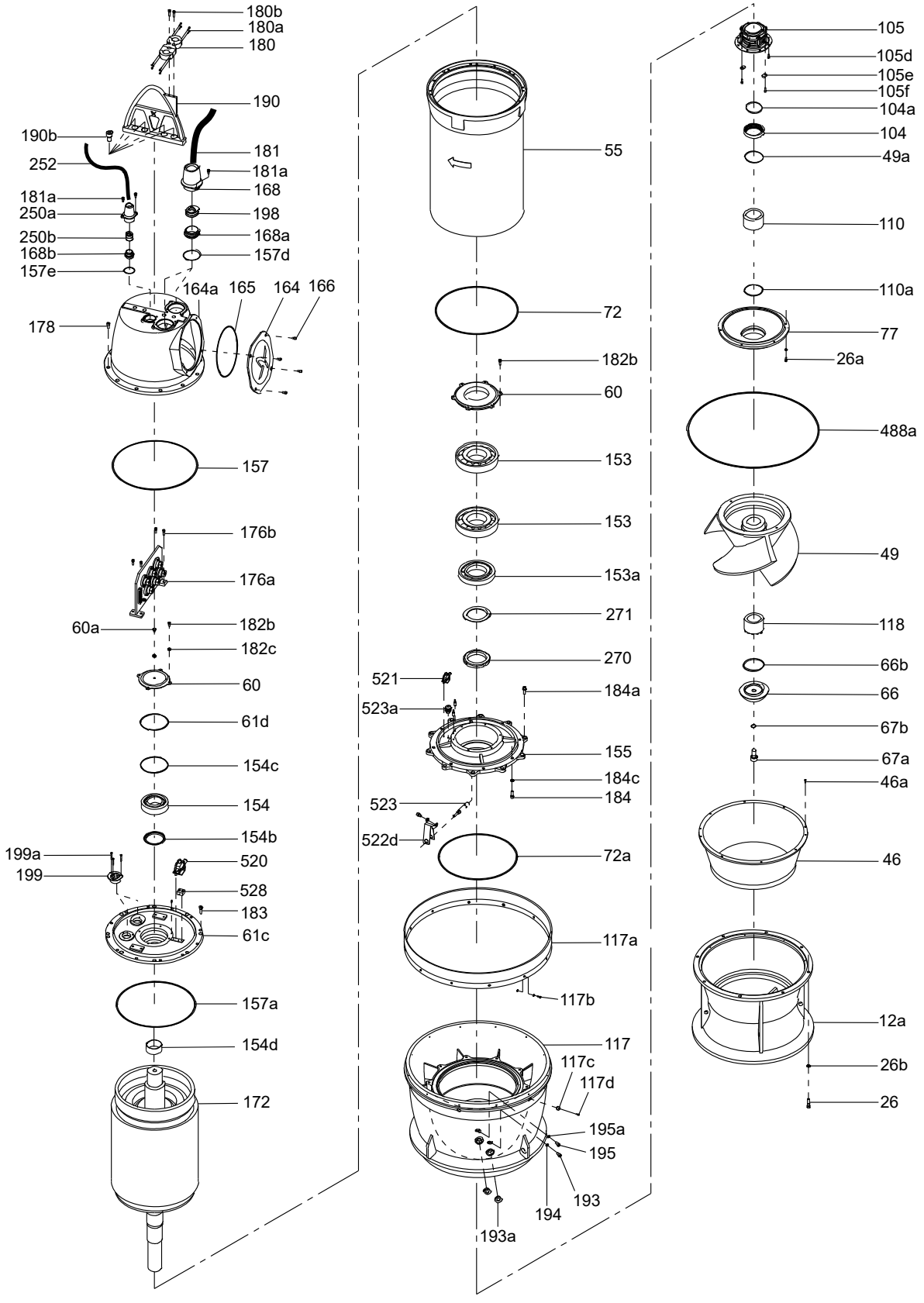
180b
180a
180
190
190b
181
252
181a
181a
168
250a
198
250b
168a
168b
157d
157e
164a
165
164
166
178
157
176b
176a
60a
182b
182c
60
61d
154c
154
154b
199a
520
199
528
183
61c
157a
154d
172
55
72
182b
60
153
153
153a
271
270
521
184a
523a
155
184c
184
523
522d
72a
117a
117b
117
117c
117d
195a
195
193
194
193a
105
105d
105e
105f
104a
104
49a
110
110a
77
26a
488a
49
118
66b
66
67b
67a
46a
46
12a
26b
26
TM060240

O-ring

Pos.	Range	Poles	Power					
		8				350 kW	400~500 kW	550 kW
		10	200~220 kW	250 kW		300~350 [1] kW	350 [2]~500 kW	
		12	200 kW		220 kW	250~300 kW	350 kW	
	Description/Kit No		*98843444*	*98843445*	*98843446*	*98843447*	*98843448*	*98843449*
49a	O-ring	3.5 x 110.0	1	-	1	-	-	-
		3.5 x 120.0	-	1	-	1	-	-
		3.5 x 130.0	-	-	-	-	1	-
		3.5 x 140.0	-	-	-	-	-	1
61d	O-ring	5.7 x 180.0	1	1	-	-	-	-
		5.7 x 215.0	-	-	1	1	1	1
66b	O-ring	5.7 x 155.0	1	1	1	1	1	1
67c	O-ring	3.1 x 40.0	1	1	1	1	1	1
72	O-ring	8.4 x 650.0	1	1	1	1	1	1
72a	O-ring	8.4 x 620.0	1	1	1	1	1	1
104a	O-ring	3.5 x 110.0	1	-	1	-	-	-
		3.5 x 120.0	-	1	-	1	-	-
		3.5 x 130.0	-	-	-	-	1	-
		3.5 x 140.0	-	-	-	-	-	1
105b	O-ring	3.5 x 130.0	1	-	1	-	-	-
		5.7 x 150.0	-	1	-	1	1	-
		5.7 x 170.0	-	-	-	-	-	1
105c	O-ring	5.7 x 190.0	1	-	1	-	-	-
		5.7 x 210.0	-	1		1	1	-
		5.7 x 230.0	-	-	-	-	-	1
106a	O-ring	3.5 x 95.0	1	-	1	-	-	-
		3.5 x 105.0	-	1	-	1	-	-
		3.5 x 115.0	-	-	-	-	1	-
		3.5 x 125.0	-	-	-	-		1
110a	O-ring	3.5 x 110.0	1	-	1	-	-	-
		3.5 x 120.0	-	1	-	1	-	-
		3.5 x 130.0	-	-	-	-	1	-
		3.5 x 140.0	-	-	-	-	-	1
154b	Lip seal	TC-13516514	1	1	1	1	1	1
154c	O-ring	5.7 x 180.0	1	1	1	1	1	1
157	O-ring	8.4 x 605.0	1	1	-	-	-	-
		8.4 x 670.0	-	-	1	1	1	1
157a	O-ring	8.4 x 622.0	1	1	-	-	-	-
		8.4 x 702.0	-	-	1	1	1	1
157d	O-ring [3]	3.5 x 130.0	2	2	4	4	4	4
157e	O-ring	3.5 x 80.0	1	1	1	1	1	1
165	O-ring	5.7 x 280.0	1	1	-	-	-	-
		5.7 x 400.0	-	-	1	1	1	1
194	O-ring	3.1 x 16.0	1	1	1	1	1	1
195a	O-ring	3.1 x 22.0	1	1	1	1	1	1
488	O-ring	12.0 x 1040.0	1	1	1	1	1	1

1) 60 Hz

2) 50 Hz

3) More O-rings might be supplied than the mentioned numbers.

Power Lock

Pos.	Range	Poles	Power			
		8		350 kW	400~500 kW	550 kW
		10	200~220 kW	250~350 [1] kW	350 [2]~500 kW	
		12	200~220 kW	250~300 kW	350 kW	
	Description/Kit No		*98843314*	*98843315*	*98843316*	*98843317*
118	Power Lock		1	1	1	1

1) 60 Hz

2) 50 Hz

Turbulence Optimizer

Pos.	Description/Kit No	*98843329*
117a	Turbulence Optimizer	1
117b	Socket screw	12
	Washer	24

Wear ring

Pos.	Description/Kit No	Pressure
		M
		98843379
46	Wear ring	1
46a	Screw	4

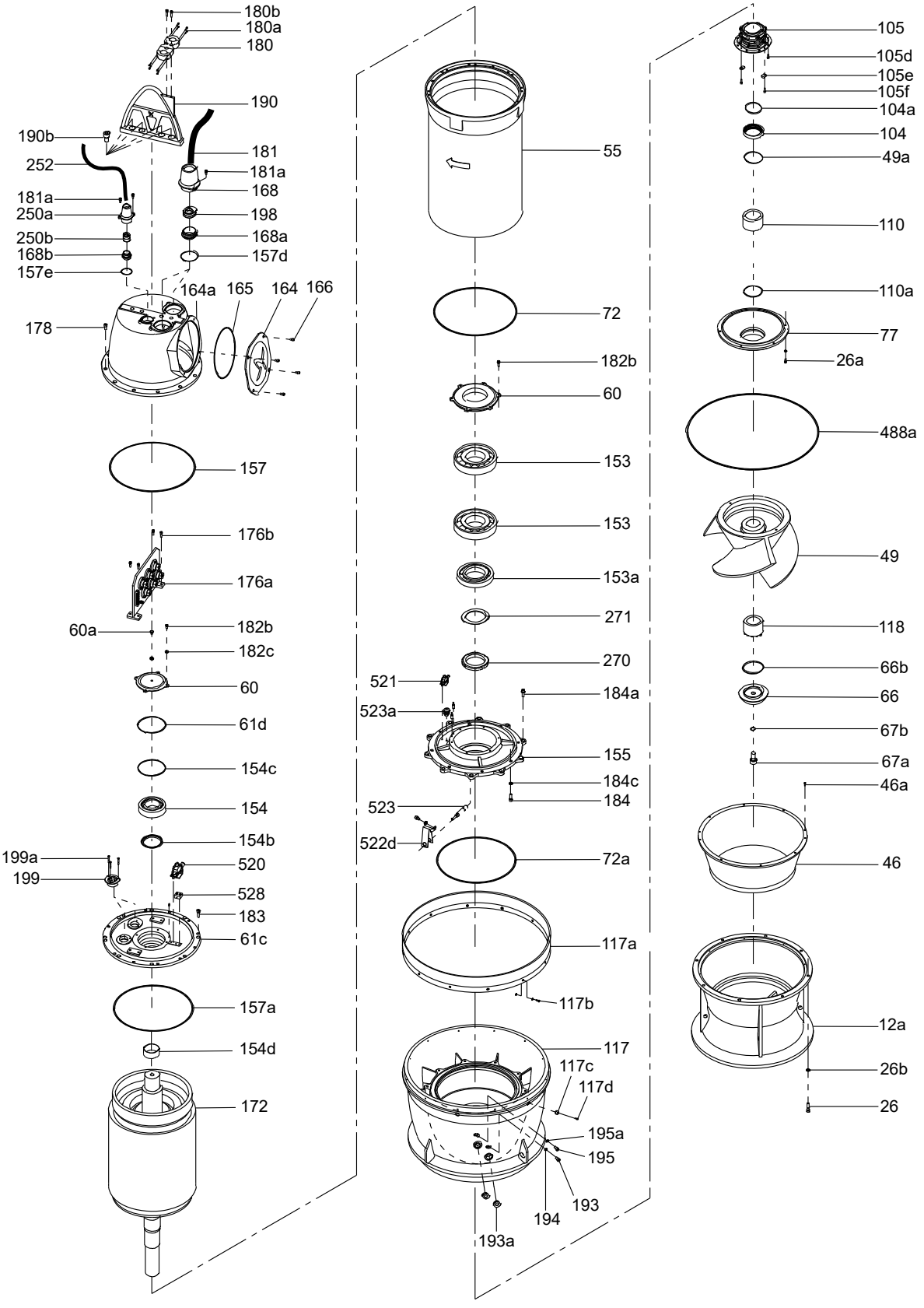
180b
180a
180
190
190b
181
252
181a
181a
168
250a
198
250b
168a
168b
157d
157e
164a
165
164
166
178
157
176b
176a
60a
182b
182c
60
61d
154c
154
154b
199a
520
199
528
183
61c
157a
154d
172
55
72
182b
60
153
153
153a
271
270
521
184a
523a
155
184c
184
523
522d
72a
117a
117b
117
117c
117d
195a
195
193
194
193a
105
105d
105e
105f
104a
104
49a
110
110a
77
26a
488a
49
118
66b
66
67b
67a
46a
46
12a
26b
26
TM060240

37. LM, LME, LMD, LMDE

50/60 Hz, Models C, D

Pump shaft diameter

Pump type		Hz, phase		Pos. 51
LM, LME		50, 3-ph.	60, 3-ph.	[mm]
40 -	125/142	x		16
			x	
	160/150	x		
	160/165	x		
	160/152		x	
	160/165		x	
	200/191	x		
	200/205	x		
	200/191		x	
	200/205		x	
50 -	125/117	x		
	125/128	x		
	125/117		x	
	125/128		x	
	160/154	x		
	160/165	x		
	160/154		x	
	160/165		x	
	200/189	x		
	200/202	x		
	200/189		x	
	200/202		x	
65 -	125/133	x		
	125/114		x	
	125/126		x	
	125/133		x	
	160/158	x		
	160/173	x		
	160/158		x	
	160/173		x	
	200/187	x		
	200/202	x		
	200/198		x	22
80 -	120/136	x		16
	125/140	x		
	125/125		x	
	125/133		x	
	125/140		x	
	160/162	x		
	160/168	x		
	160/168	x		22 [1]
	160/154	x		16
	160/168	x		
	160/152		x	
	160/168		x	22
	200/187	x		

1) Used as from week 19, 1999, pump No 9919.

Pump type		Hz, phase		Pos. 51
LM, LME		50, 3-ph.	60, 3-ph.	[mm]
80 -	200/200	x		22
	200/210	x		
	200/187	x		16
	200/202	x		
	200/187		x	22
	200/205		x	
	160/162	x		16
	160/168	x		
	200/187	x		22
	200/200	x		
	200/210	x		
50 -	125/142	x		16
			x	
50 -	160/150	x		
	160/165	x		
	160/152		x	
	160/165		x	
50 -	200/191	x		
	200/205	x		
	200/191		x	
	200/205		x	
65 -	125/117	x		
	125/128	x		
	125/117		x	
	125/128		x	
65 -	160/154	x		
	160/165	x		
	160/154		x	
	160/165		x	
65 -	200/189	x		
	200/202	x		
	200/189		x	
	200/202		x	
80 -	125/133	x		
	125/114		x	
	125/126		x	
	125/133		x	
80 -	160/158	x		
	160/173	x		
	160/158		x	
	160/173		x	
80 - [2]	200/187	x		
	200/202	x		
	200/198		x	22

2) Model D.

Pump type		Hz, phase		Pos. 51
LM, LME		50, 3-ph.	60, 3-ph.	[mm]
100 -	120/136	x		16
	125/140	x		
	125/125		x	
	125/133		x	
	125/140		x	
100 - [2]	160/162	x		
	160/168	x		
	160/168	x		22 [1]
80 - [2]	160/154	x		16
	160/168	x		
	160/152		x	
	160/168		x	22
100 - [2]	200/187	x		
	200/200	x		
	200/210	x		
80 - [2]	200/187	x		16
	200/202	x		
	200/187		x	22
	200/205		x	
100 - [2]	160/162	x		16
	160/168	x		
	200/187	x		22
	200/200	x		
	200/210	x		

1) Used as from week 19, 1999, pump No 9919.

2) Model C.

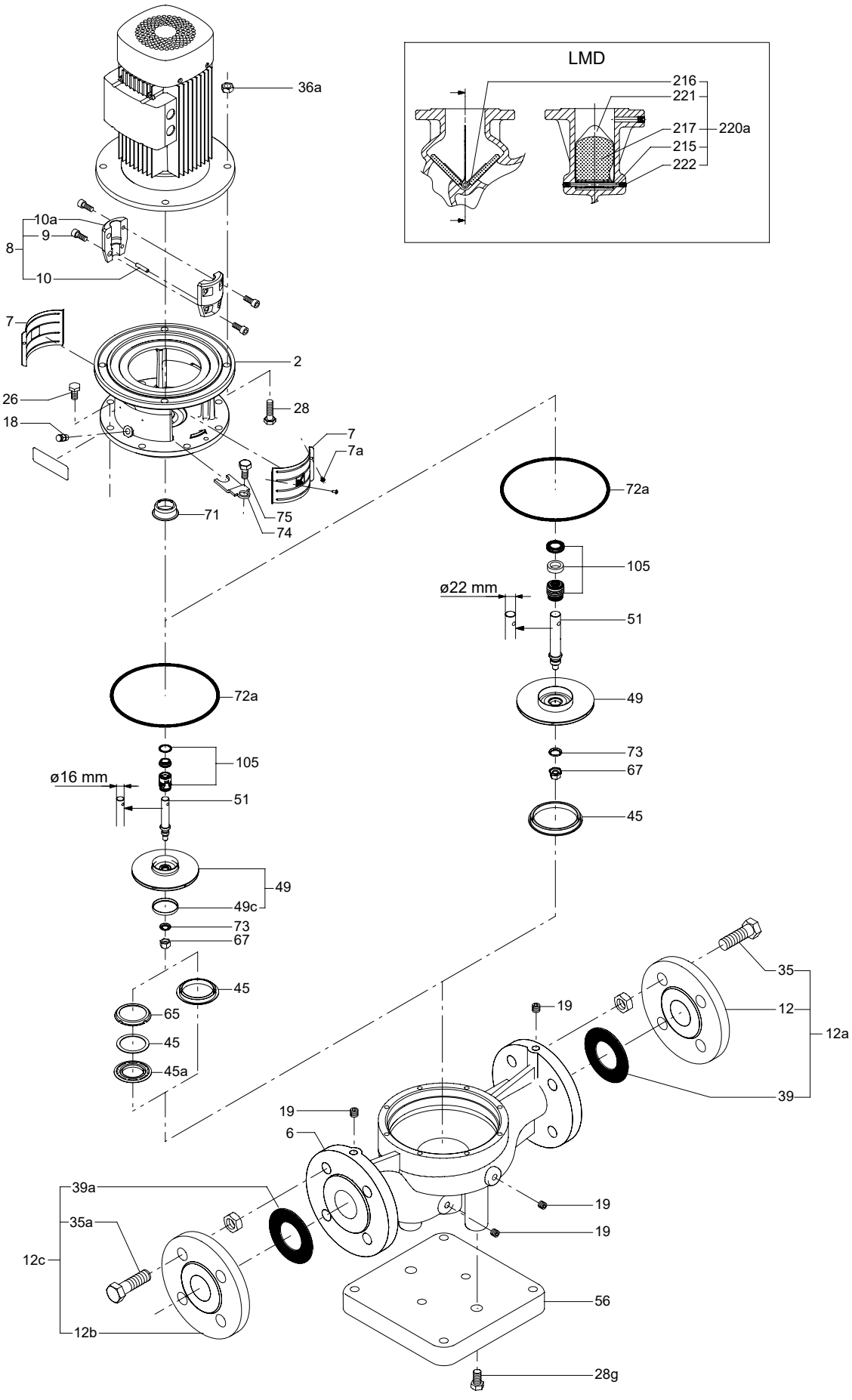
LMD
216
221
217
220a
215
222
36a
10a
9
8
10
7
2
26
28
18
7
7a
71
75
74
72a
105
ø22 mm
51
49
73
67
45
72a
105
ø16 mm
51
49
49c
73
67
45
65
45
45a
35
19
12
12a
39
19
6
39a
35a
12c
12b
19
19
56
28g
TM025294

50/60 Hz, Models C, D

Coupling complete

Pos.	Kit No	339114	339119	339124	339128	345107	345108
	Motor/pump shaft diameter	**14/16**	**19/16**	**24/16**	**28/16**	**28/22**	**38/22**
	Description						
9	Screw	4	4	4	4	4	4
10	Pin	1	1	1	1	1	1
10a	Coupling half	2	2	2	2	2	2

Pos.		NEMA	NEMA	NEMA
	Kit No	485133	485134	485135
	Motor/pump shaft diameter	**15.9/16**	**28.6/16**	**28.6/22**
	Description			
9	Screw	4	4	4
10	Pin	1	1	1
10a	Coupling half	2	2	2

Shaft seal

Pos.	Kit No	485113	485114	485351	485371	485278	485372	985845	985909
	Pump shaft diameter [mm]	**16**	**22**	**16**	**16**	**22**	**22**	**16**	**22**
	Description	**AUUE**	**AUUE**	**BUBE**	**BUBV**	**BBUE**	**BBUV**	**RUUE/V**	**RUUE/V**
72a	O-ring	1	1	1	1	1	1	1	1
105	Shaft seal	1	1	1	1	1	1	1	1

Pos.	Kit No	985850	485454	485453	485460	485459	485458	485457
	Pump shaft diameter [mm]	**16**	**16**	**22**	**16**	**16**	**22**	**22**
	Description	**AUUK**	**BUUE**	**BUUE**	**BQQE**	**BQQV**	**BQQE**	**BQQV**
72a	O-ring	1	1	1	1	1	1	1
105	Shaft seal	1	1	1	1	1	1	1

Wear parts

Pos.	Kit No	485125	485122	485352	485279
	Pump shaft diameter [mm]	**16**	**22**	**16**	**22**
	Description	**AUUE**	**AUUE**	**BUBE**	**BBUE**
10	Coupling pin	1	1	1	1
45	Neck ring	1	-	1	-
49c	Wear ring	1	-	1	-
51	Shaft	1	1	1	1
67	Lock nut	1	1	1	1
72a	O-ring	1	1	1	1
73	Lock washer	1	1	1	1
105	Shaft seal	1	1	1	1

Valve for twin-head pumps

Pos.		LMD 50	LMD 65	LMD 80	LMD 100
	Kit No	485363	485364	485365	485366
	Description				
215	Pin	1	1	1	1
216	Spring	1	1	1	1
217	Valve flap	2	2	2	2
221	Dividing plate	-	-	1	-
222	Pipe plug	2	2	2	2

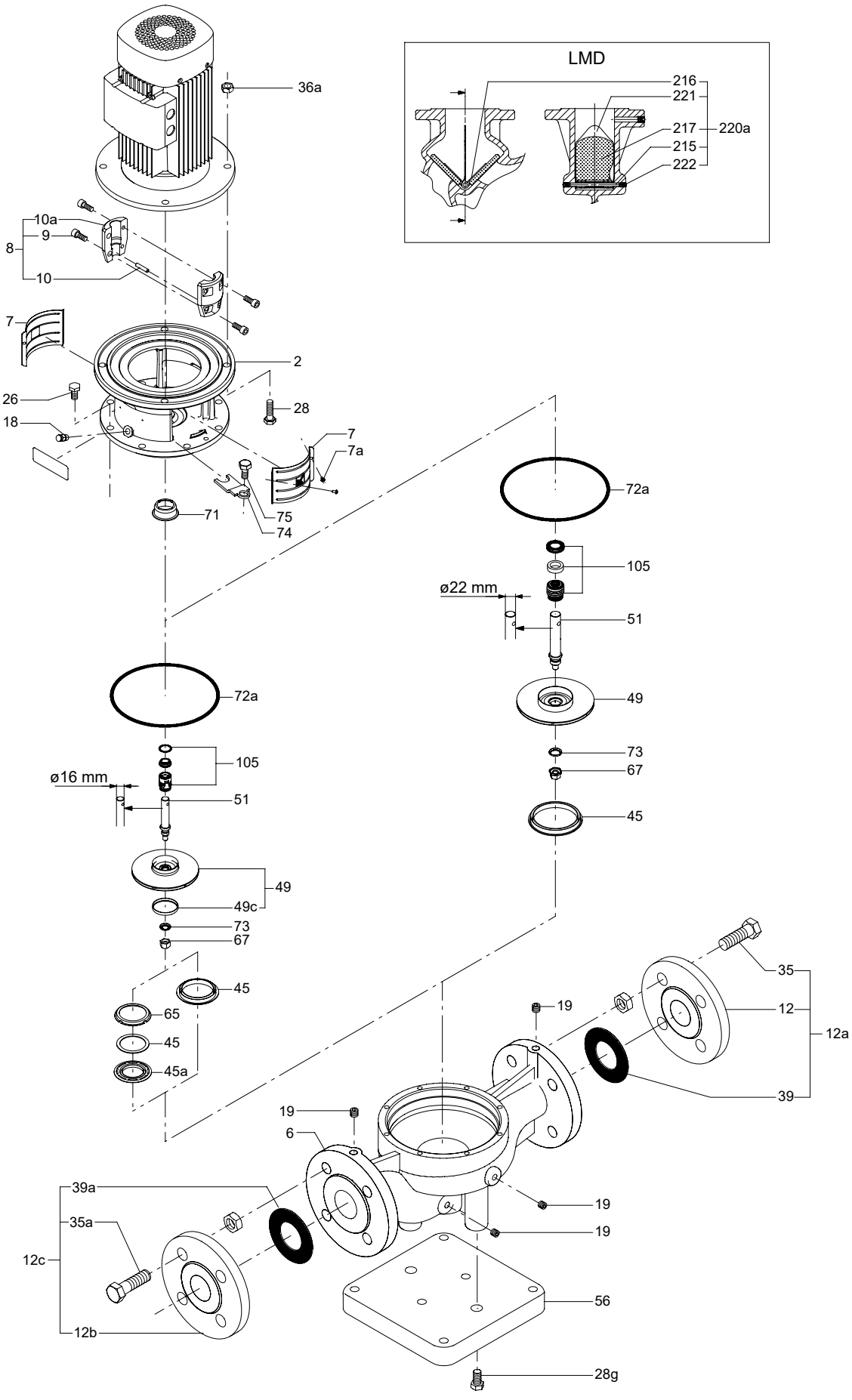
LMD
216
221
217
220a
215
222
36a
10a
9
8
10
7
2
26
28
18
7
7a
71
75
74
72a
105
ø22 mm
51
49
73
67
45
72a
105
ø16 mm
51
49
49c
73
67
45
65
45
45a
35
19
12
12a
39
19
6
39a
35a
12c
12b
19
19
56
28g
TM025294

38. LP, LPE, LPD, LPDE

50/60 Hz, Models C, D

Pump shaft diameter

Pump type		Hz, phase		Pos. 51 [mm]
LPD, LPDE		50, 3-ph.	60, 3-ph.	
50 -	125/132	x		16
	125/142	x		
	125/123		x	
	125/142		x	
	160/152	x		
	160/165	x		
	160/152		x	
	160/165		x	22
	200/185	x		16
	200/205	x		22
65 -	125/104	x		16
	125/117	x		
	125/128	x		
	125/104		x	
	125/117		x	
	125/128		x	22
	160/154	x		16
	160/165	x		22
	160/154		x	
	160/165		x	
	200/189	x		
	200/202	x		
80 -	125/124	x		16
	125/133	x		
	125/104	x		
	125/107	x		
	125/128	x		
80 -	125/114		x	22
	125/125		x	
	125/133		x	
	160/149	x		
	160/164	x		
	160/136	x		
	160/156	x		
80 -	160/154		x	
	160/168		x	
	200/180	x		
	200/202	x		
	200/164	x		
	200/182	x		
100 -	125/121	x		
	125/130	x		
	125/137	x		
	125/121	x		
	125/125	x		
	125/134	x		

Pump type		Hz, phase		Pos. 51 [mm]
LPD, LPDE		50, 3-ph.	60, 3-ph.	
	125/124	x		16
	125/133	x		
100 -	125/124		x	22
	125/133		x	
	125/140		x	
	160/152	x		
	160/168	x		
	200/183	x		33
	200/191	x		
	200/210	x		
65 -	125/132	x		16
	125/142	x		
	125/123		x	
	125/142		x	
65 -	160/152	x		
	160/165	x		
	160/152		x	
	160/165		x	22
65 -	200/185	x		16
	200/205	x		22
80 - [1]	125/104	x		16
	125/117	x		
	125/128	x		
	125/104		x	
	125/117		x	
	125/128		x	22
80 -	160/154	x		16
	160/165	x		22
	160/154		x	
	160/165		x	
80 -	200/189	x		
	200/202	x		
100 - [1]	125/124	x		16
	125/133	x		
80 - [2]	125/104	x		
	125/107	x		
	125/128	x		
	125/114		x	22
	125/125		x	
	125/133		x	
	160/149	x		
	160/164	x		
100 -	160/136	x		
	160/156	x		

1) Model D.

2) Model C.

Pump type		Hz, phase		Pos. 51
LPD, LPDE		50, 3-ph.	60, 3-ph.	[mm]
	160/154		x	
	160/168		x	
	200/180	x		
	200/202	x		
	200/164	x		22
	200/182	x		
100 -	125/121	x		
	125/130	x		
	125/137	x		
	125/121	x		
125 -	125/125	x		
	125/134	x		16
100 - [1)]	125/124	x		
	125/133	x		
	125/124		x	
	125/133		x	
	125/140		x	22
	160/152	x		
	160/168	x		
125 -	200/183	x		
	200/191	x		33
	200/210	x		

1) Model C.

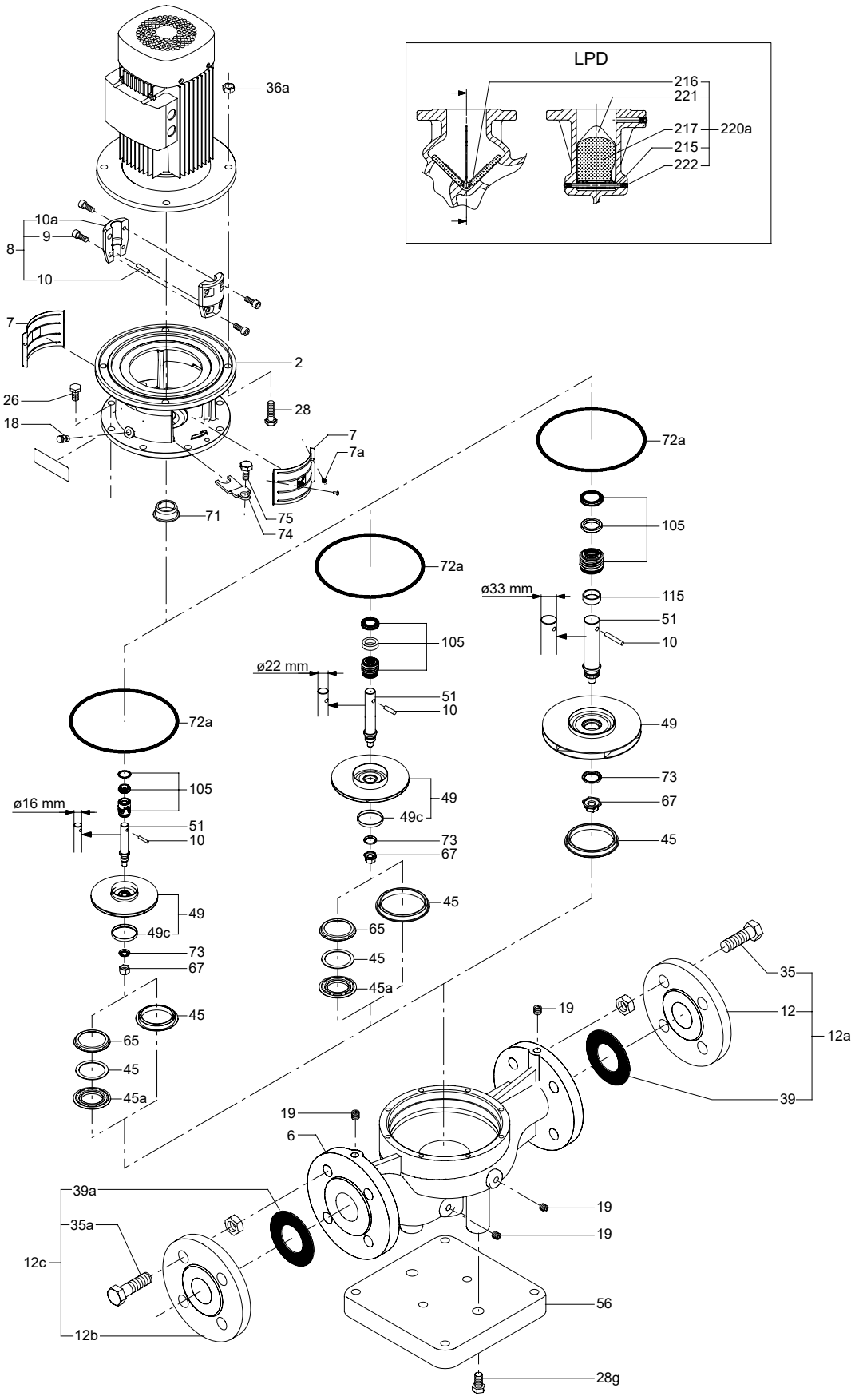
LPD
216
221
217
220a
215
222
36a
10a
9
8
10
7
2
26
28
18
7
7a
71
75
74
72a
105
ø33 mm
115
51
10
49
73
67
45
ø22 mm
ø16 mm
49c
65
45a
35
12
12a
39
19
6
39a
35a
12c
12b
56
28g
TM025295

50/60 Hz Coupling complete

Pos.	Kit No	339119	339124	339128	345107	345108	345109
	Motor/pump shaft diameter	**19/16**	**24/16**	**28/16**	**28/22**	**38/22**	**42/22**
	Description						
9	Screw	4	4	4	4	4	4
10	Pin	1	1	1	1	1	1
10a	Coupling half	2	2	2	2	2	2

Pos.				NEMA	NEMA
	Kit No	485039	485040	485134	485160
	Motor/pump shaft diameter	**48/33**	**55/33**	**28.6/16**	**41.3/22**
	Description				
9	Screw	4	4	4	4
10	Pin	1	1	1	1
10a	Coupling half	2	2	2	2

Shaft seal

Pos.	Kit No	485113	485114	485351	485371	485278	485372	985845	985909
	Pump shaft diameter [mm]	**16**	**22**	**16**	**16**	**22**	**22**	**16**	**22**
	Description	**AUUE**	**AUUE**	**BUBE**	**BUBV**	**BBUE**	**BBUV**	**RUUE/V**	**RUUE/V**
72a	O-ring	1	1	1	1	1	1	1	1
105	Shaft seal	1	1	1	1	1	1	1	1

Pos.	Kit No	985850	485454	485453	485460	485459	485458	485457	485456
	Pump shaft diameter [mm]	**16**	**16**	**22**	**16**	**16**	**22**	**22**	**33**
	Description	**AUUK**	**BUUE**	**BUUE**	**BQQE**	**BQQV**	**BQQE**	**BQQV**	**BQQE**
72a	O-ring	1	1	1	1	1	1	1	1
105	Shaft seal	1	1	1	1	1	1	1	1

Pos.	Kit No	485455	485353	485373	485448	985624	985625
	Pump shaft diameter [mm]	**33**	**33**	**33**	**33**	**33**	**33**
	Description	**BQQV**	**BBUE**	**BBUV**	**BUUE**	**GQQE**	**GQQV**
72a	O-ring	1	1	1	1	1	1
105	Shaft seal	1	1	1	1	1	1

Wear parts

Pos.	Kit No	485125	485122	485352	485279	485354	485449
	Pump shaft diameter [mm]	**16**	**22**	**16**	**22**	**33**	**33**
	Description	**AUUE**	**AUUE**	**BUBE**	**BBUE**	**BBUE**	**BUUE**
10	Coupling pin	1	1	1	1	1	1
45	Neck ring	1	-	1	-	-	-
49c	Wear ring	1	-	1	-	-	-
51	Shaft	1	1	1	1	1	1
67	Lock nut	1	1	1	1	1	1
72a	O-ring	1	1	1	1	1	1
73	Lock washer	1	1	1	1	1	1
105	Shaft seal	-	-	1	1	1	1
	Shaft seal	1	1	-	-	-	-
115	Spacer	-	-	-	-	1	1

Valve for twin-head pumps

Pos.		LPD 65	LPD 80	LPD 100 LPD 125
	Kit No	***485364***	***485365***	***485366***
	Description			
215	Pin	1	1	1
216	Spring	1	1	1
217	Valve flap	2	2	2
221	Dividing plate	-	1	-
222	Pipe plug	2	2	2

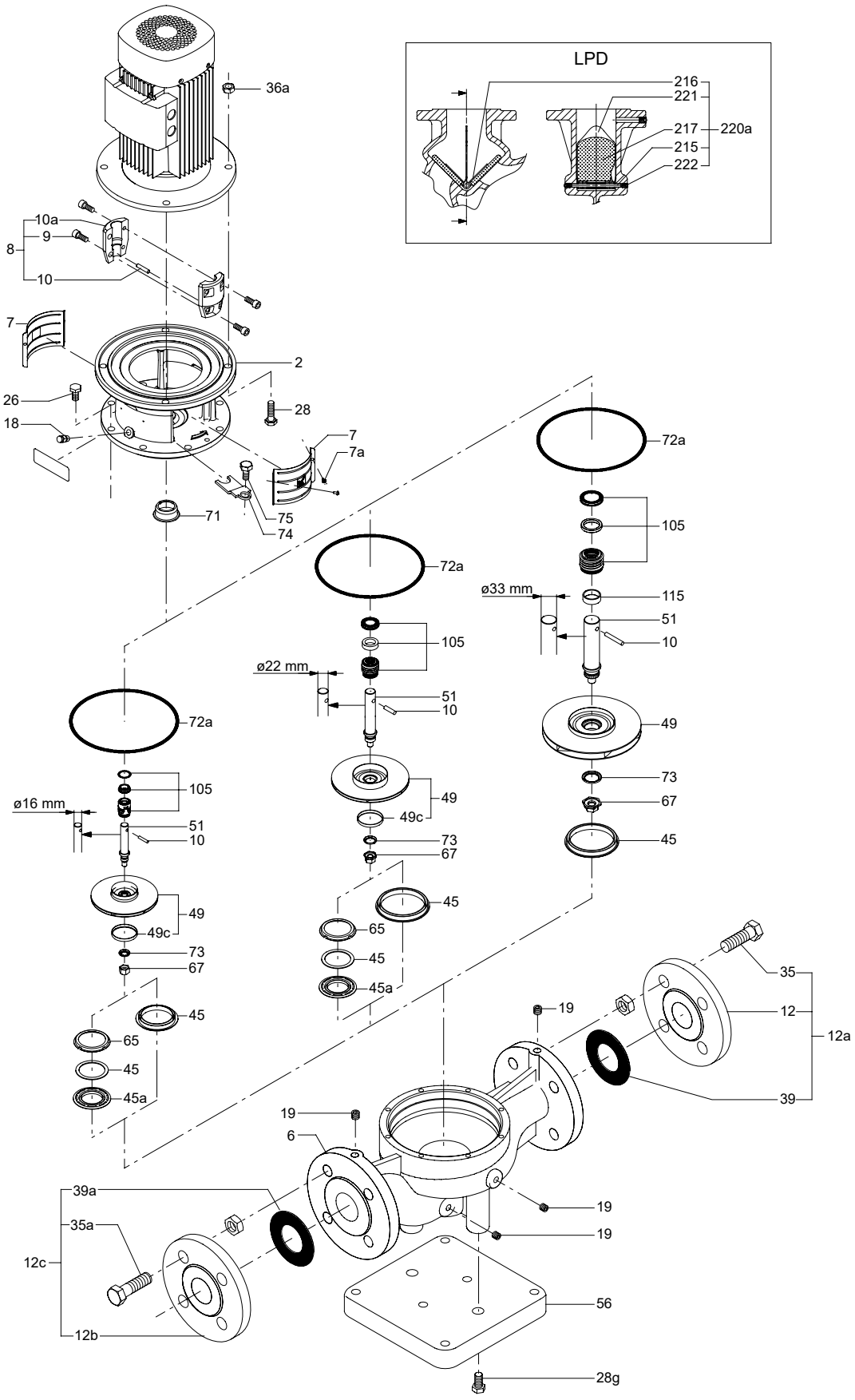
LPD
216
221
217
220a
215
222
36a
10a
9
8
10
7
2
26
28
18
7
7a
71
75
74
72a
105
ø33 mm
115
51
10
49
73
67
45
ø22 mm
49c
65
45a
ø16 mm
35
12
12a
39
19
6
39a
35a
12c
12b
56
28g
TM025295

39. LS

LS, with sleeve

Example: pump with sleeve

LS	125	-100	-305X	/273.1	, (W)	1	F2	A	S	BBQE	1

Material code: A, C, B, K

50/60 Hz

Bearing

Pos.	Description	LS 65 LS 100-80-241	LS 100-80-242XE	LS 100-80-356 LS 125 LS 150 LS 200-150-305	LS 200-150-381 LS 200-150-483 LS 250 LS 300-250-305
	Kit No	*96827576*	*96827582*	*96827577*	*96827578*
53	Bearing	1	1	1	1
54	Bearing	1	1	1	1
54c	Washer	-	-	-	1
54d	Snap ring	-	-	-	1
109b	Gasket	-	-	-	2
113e	Gasket	2	2	2	-

Pos.	Description	LS 200-150-483 X6 LS 200-150-508	LS 300-250-381	LS 350-250-498 LS 350-250-630	LS 300-200-489 LS 350-300-508 LS 400-350-397
	Kit No	*96827579*	*96827581*	*96840087*	*96840088*
53	Bearing	1	1	1	1
54	Bearing	1	1	1	1
54c	Washer	1	-	-	2
54d	Snap ring	1	1	1	1
109b	Gasket	2	-	-	-
110a	Gasket	2	-	-	-
113e	Gasket	-	2	2	2
113f	Lip seal	2	-	2	2
113g	Lip seal	-	-	1	1

Gasket

Pos.	Description	LS 65-50-241 LS 65-50-330 LS 100-80-241	LS 100-80-356 LS 125-100-X	LS 150-125-305	LS 150-125-381	LS 200-150-305X
	Kit No	*96827585*	*96827587*	*96827593*	*96827586*	*96827595*
72a	Gasket	1	2	2	2	2
79	Slinger	2	2	2	2	2
109b	Gasket	2	2	2	2	2
113e	Gasket	2	1	1	1	1

Pos.	Description	LS 200-150-483	LS 200-150-381 LS 200-150-381B	LS 250-200-305	LS 250-200-381	LS 300-250-305
	Kit No	*96840076*	*96827588*	*96827603*	*96827609*	*96827613*
66	O-ring	-	-	-	-	2
72a	Gasket	1	1	1	1	1
79	Slinger	2	2	2	2	2
109	O-ring	2	2	2	2	
109b	Gasket	-	2	2	2	2
110	O-ring	2	-	-	-	-

Pos.	Description	LS 200-150-508	LS 300-200-489	LS 350-250-498	LS 350-250-630	LS 350-300-508
	Kit No	*96827599*	*96827611*	*96840077*	*96840078*	*96840079*
66	O-ring	2	-	-	2	-
72a	Gasket	1	1	1	1	1
79	Slinger	2	2	2	2	2
109	O-ring	-	2	2	2	2
109a	O-ring	-	2	2	2	2
110	O-ring	-	2	2	-	2
110a	Gasket	2	-	-	-	-
113e	Gasket	-	2	2	2	2

Pos.	Description	LS 300-250-381	LS 400-350-397
	Kit No	*96827590*	*96840080*
72a	Gasket	1	1
79	Slinger	-	2
109	O-ring	1	2
109a	O-ring	-	2
110	O-ring	2	2
113e	Gasket	2	2
113f	Lip seal	-	2
113g	Lip seal	-	1

Hardware

Pos.	Description	LS 65-50-241 LS 65-50-330 LS 100-80-241 LS 100-80-241XE	LS 100-80-356	LS 125-100-279 LS 125-100-305	LS 125-100-381	LS 150-125-305 LS 200-150-305C
	Kit No	*96827660*	*96827622*	*96827624*	*96827626*	*96827629*
26	Stud		28	28	28	
26b	Roll pin	2	2	2	2	2
26c	Cap screw	12	12	10	12	54
26d	Cap screw	8	4	4	4	4
36	Nut	-	28	28	28	-
114a	Cap screw	8	8	8	8	8

Pos.	Description	LS 150-125-381 LS 200-150-305A	LS 200-150-381 LS 200-150-381B LS 250-200-305 LS 250-200-381 LS 300-250-305	LS 200-150-483 LS 200-150-483XE	LS 200-150-508	LS 300-200-489 LS 350-300-508
	Kit No	*96827632*	*96827636*	*96827640*	*96827644*	*96827649*
26b	Roll pin	2	2	2	2	2
26c	Cap screw	50	56	60	26	60
26d	Cap screw	4	4	4	4	4
58a	Cap screw	-	-	8	4	8
114	Screw	-	-	-	-	24
114a	Cap screw	8	4	8	8	8
114b	Cap screw	-	4	16	12	12

Pos.	Description	LS 300-250-381	LS 350-250-498	LS 350-250-630	LS 400-350-397
	Kit No	*96827651*	*96840082*	*96840083*	*96840085*
26b	Roll pin	2	2	2	2
26c	Cap screw	34	36	32	30
26d	Cap screw	-	4	4	4
58a	Cap screw	8	8	8	8
114	Cap screw	24	28	28	24
114a	Cap screw	8	8	12	8

Impeller

The kit consists of impeller (pos. 49) and key (pos. 11 and 11a).

Description	Kit No			
	Silicon bronze (B21)	Nickel-aluminium-bronze (B22)	AISI-304 (H304)	AISI-316 (H316)
LS 65-50-241	*96827641*	*96903628*	*96903630*	*96903631*
LS 65-50-330	*96827639*	*96903632*	*96903633*	*96903634*
LS 100-80-241	*96827663*	*96903635*	*96903636*	*96903637*
LS 100-80-241 XE	*96827662*	*96903638*	*96903639*	*96903640*
LS 100-80-356	*96827666*	*96903641*	*96903642*	*96903643*
LS 100-80-356 B	*97735873*	*97931497*	*97932509*	*97932511*
LS 125-100-279	*96827668*	*96903644*	*96903645*	*96903647*
LS 125-100-305	*96827670*	*96903648*	*96903649*	*96903650*
LS 125-100-381	*96827669*	*96903651*	*96903652*	*96903653*
LS 125-100-388	*97735854*	*97735940*	-	-
LS 150-125-305	*96827667*	*96903654*	*96903655*	*96903656*
LS 150-125-381	*96827665*	*96903657*	*96903658*	*96903659*
LS 200-150-305A	*96827664*	*96903660*	*96903661*	*96903662*
LS 200-150-305C	*96827661*	*96903663*	*96903664*	*96903665*
LS 200-150-381	*96827659*	*96903667*	*96903668*	*96903669*
LS 200-150-381B	*97937562*	*97937563*	*97937564*	*97937565*
LS 200-150-483	*96840089*	*96903670*	*96903671*	*96903682*
LS 200-150-483 X6	*96843910*	*96903683*	*96903684*	*96903687*
LS 200-150-508	*96827655*	*96903688*	*96903689*	*96903690*
LS 250-200-305	*96827653*	*96903691*	*96903692*	*96903693*
LS 250-200-381	*96827652*	*96903694*	*96903695*	*96903696*
LS 300-200-489	*96827650*	*96903697*	*96903698*	*96903699*
LS 300-250-305	*97735871*	*97931510*	*97948029*	*97932522*
LS 300-250-305B	*97735871*	*97931510*	*97948029*	*97932522*
LS 300-250-381	*96827646*	*96903703*	*96903704*	*96903705*

Description	Kit No			
	Silicon bronze (B21)	Nickel-aluminium-bronze (B22)	AISI-304 (H304)	AISI-316 (H316)
LS 350-250-498	*96840090*	*96903706*	*96903707*	*96903708*
LS 350-250-630	*96840091*	*96903709*	*96903710*	*96903712*
LS 350-300-508	*96840102*	*96903713*	*96903714*	*96903715*
LS 400-350-397	*96840103*	*96903716*	*96903717*	*96903718*

Shaft with sleeve

The kit consists of shaft (pos. 51) and key (pos. 11 and 11a).

Description	Kit No	
	Clockwise	Counterclockwise
LS 65-50-241	*99393281*	*99393281*
LS 65-50-330	*99393281*	*99393281*
LS 100-80-241	*99393281*	*99393281*
LS 100-80-356	*99393282*	*99393283*
LS 125-100-279	*99393282*	*99393283*
LS 125-100-305	*99393282*	*99393283*
LS 150-125-305	*99393284*	*99393285*
LS 150-125-381	*99393286*	*99393287*
LS 200-150-305	*99393286*	*99393287*
LS 200-150-381	*99393288*	*99393289*
LS 200-150-483	*99393290*	*99393291*
LS 200-150-508	*99393292*	*99393293*
LS 250-200-305	*99393288*	*99393289*
LS 250-200-381	*99393294*	*99393295*
LS 300-200-489	*97527402*	*99393297*
LS 300-250-305	*99393298*	*99393299*
LS 300-250-381	*99393300*	*99393301*
LS 350-250-498	*99393302*	*99393303*
LS 350-250-630	*99393304*	*99393305*
LS 350-300-508	*99393306*	*99393308*
LS 400-350-397	*97527402*	*99393297*
LS 100-80-241 XE	*99393309*	*99393310*
LS 200-150-483 X6	*99393311*	*99393312*
LS 125-100-388	*99393282*	*99393283*

Packing

Pos.	Description	LS 65 LS 100-80-241	LS 100-80-241 XE	LS 100-80-356 LS 125 LS 150 LS 200-150-305	LS 200-150-381 LS 200-150-483 LS 250 LS 300-250-305	LS 200-150-483 X6
	Kit No	***96920260***	***96920261***	***96920262***	***96920263***	***96920264***
107	Packing ring	10	12	10	10	10
108	Distribution ring	2	2	2	2	2
-	Snap ring	2	-	2	2	2

Pos.	Description	LS 200-150-508	LS 300-200-489 LS 350-300-508 LS 400-350-397	LS 300-250-381	LS 350-250-498 LS 350-250-630
	Kit No	***96920265***	***96920266***	***96920267***	***96920268***
107	Packing ring	8	10	10	10
108	Distribution ring	2	2	2	2
-	Snap ring	2	2	2	2

Packing gland

Pos.	Description	LS 65 LS 100-80-241	LS 100-80-241 XE	LS 100-80-356 LS 125 LS 150 LS 200-150-305	LS 200-150-381 LS 200-150-483 LS 250-200-305 LS 250-200-381 LS 300-250-305	LS 200-150-483 X6 LS 200-150-508
	Kit No	*96920269*	*96920270*	*96920271*	*96920272*	*96920273*
106	Packing gland	2	2	2	2	2
115	Stud	4	4	4	4	4
115a	Nut	4	4	4	4	4

Pos.	Description	LS 300-200-489 LS 350-300-508 LS 400-350-397	LS 300-250-381	LS 350-250-498 LS 350-250-630
	Kit No	*96920274*	*96920275*	*96920276*
106	Packing gland	2	2	2
115	Stud	4	4	4
115a	Nut	4	4	4

Shaft sleeve, bronze (B18)

Pos.	Description	LS 100-80-241 XE	LS 100-80-356 LS 125 LS 200-150-305A	LS 150 LS 200-150-305C	LS 200-150-381 LS 250-200-305 LS 250-200-381 LS 300-250-305	LS 200-150-483
	Kit No	*96827634*	*96827638*	*96827637*	*96827635*	*96843909*
66	O-ring	2	2	2	2	2
67a	Impeller nut	1	-	-	1	1
67b	Impeller nut	1	-	-	1	1
116	Sleeve	2	-	-	2	2
116a	Locking sleeve	-	1	1	-	-
116b	Locking sleeve	-	1	1	-	-
116e	Screw	4	-	-	4	4

Pos.	Description	LS 200-150-483 X6	LS 200-150-508	LS 300-200-489	LS 200-150-483 X6	LS 300-250-381
	Kit No	*96827631*	*96827630*	*96827628*	*96827631*	*96827627*
66	O-ring	2	2	2	2	2
67a	Impeller nut	1	1	1	1	1
67b	Impeller nut	1	1	1	1	1
116	Sleeve	2	2		2	2
116c	Inner sleeve	-	-	2	-	-
116d	Shaft sleeve	-	-	1	-	-
116e	Screw	4	4	4	4	4

Pos.	Description	LS 350-250-498	LS 350-250-630	LS 350-300-508	LS 400-350-397
	Kit No	*96840104*	*96840105*	*96840106*	*96840107*
66	**O-ring**	**2**	**2**	**2**	**2**
67a	Impeller nut	1	1	1	1
67b	Impeller nut	1	1	1	1
116c	Inner sleeve	2	2	2	2
116d	Shaft sleeve	2	2	2	2
116e	Screw	4	4	4	4

Shaft sleeve, AISI 303 (H303)

Pos.	Description	LS 100-80-241 XE	LS 100-80-356 LS 125 LS 200-150-305A	LS 150 LS 200-150-305C	LS 200-150-381 LS 250-200-305 LS 250-200-381 LS 300-250-305	LS 200-150-483
	Kit No	*96903963*	*96903964*	*96903965*	*96903966*	*96903971*
66	O-ring	2	2	2	2	2
67a	Impeller nut	1	-	-	1	1
67b	Impeller nut	1	-	-	1	1
116	Sleeve	2	-	-	2	2
116a	Locking sleeve	-	1	1	-	-
116b	Locking sleeve	-	1	1	-	-
116e	Screw	4	-	-	4	4

Pos.	Description	LS 200-150-483 X6	LS 200-150-508	LS 300-200-489	LS 200-150-483 X6	LS 300-250-381
	Kit No	*96903982*	*96903969*	*96903985*	*96903982*	*96903967*
66	O-ring	2	2	2	2	2
67a	Impeller nut	1	1	1	1	1
67b	Impeller nut	1	1	1	1	1
116	Sleeve	2	2	-	2	2
116c	Inner sleeve	-	-	2	-	-
116d	Shaft sleeve	-	-	1	-	-
116e	Screw	4	4	4	4	4

Pos.	Description	LS 350-250-498	LS 350-250-630	LS 350-300-508	LS 400-350-397
	Kit No	*96903983*	*96903970*	*96903984*	*96903986*
66	O-ring	2	2	2	2
67a	Impeller nut	1	1	1	1
67b	Impeller nut	1	1	1	1
116c	Sleeve	2	2	2	2
116d	Shaft sleeve	2	2	2	2
116e	Screw	4	4	4	4

Shaft seal (BBVP)

Pos.	Description	LS 65, LS 100-80-241		LS 100-80-241 XE		LS 100-80-356 LS 125		LS 150-125-305	
		PN16	PN10	PN16	PN10	PN16	PN10	PN16	PN10
	Kit No	*96840108*	*96902648*	*96840109*	*96902657*	*96840110*	*96902669*	*96840111*	*96902682*
53	Bearing	1	1	1	1	1	1	1	1
54	Bearing	1	1	1	1	1	1	1	1
66	O-ring	-	-	2	-	2	2	-	-
72a	Gasket	1	1	1	1	1	1	1	1
79	Slinger	2	2	2	2	2	2	2	2
105	Shaft seal	2	2	2	2	2	2	2	2
109b	Gasket	2	2	2	2	-	-	2	2
113e	Gasket	2	2	2	2	2	2	2	2

Pos.	Description	LS 150-125-381		LS 200-150-305		LS 200-150-381 LS 200-150-483		LS 200-150-483 X6 LS 200-150-508	
		PN16	PN10	PN16	PN10	PN16	PN10	PN16	PN10
	Kit No	*96840112*	*96902688*	*96840113*	*96902694*	*96840114*	*96902698*	*96840115*	*96902701*
53	Bearing	1	1	1	1	1	1	1	1
54	Bearing	1	1	1	1	1	1	1	1
66	O-ring	-	-	2	2	-	-	2	2
72a	Gasket	1	1	1	1	1	1	1	1
79	Slinger	2	2	2	2	2	2	2	2

Pos.	Description	LS 150-125-381		LS 200-150-305		LS 200-150-381 LS 200-150-483		LS 200-150-483 X6 LS 200-150-508	
		PN16	PN10	PN16	PN10	PN16	PN10	PN16	PN10
	Kit No	*96840112*	*96902688*	*96840113*	*96902694*	*96840114*	*96902698*	*96840115*	*96902701*
105	Shaft seal	2	2	2	2	2	2	2	2
109	O-ring	2	2	2	2	2	2	-	-
109b	Gasket	-	-	-	-	2	2	2	2
110	O-ring	-	-	-	-	-	-	2	-
110a	Gasket	-	-	-	-	-	-	2	2
113e	Gasket	2	2	2	2	-	-	-	-
113f	Lip seal	-	-	-	-	-	-	2	2

Pos.	Description	LS 250-200-305		LS 250-200-381	
		PN16	PN10	PN16	PN10
	Kit No	*96840116*	*96902708*	*96840117*	*96902714*
53	Bearing	1	1	1	1
54	Bearing	1	1	1	1
72a	Gasket	1	1	1	1
79	Slinger	2	2	2	-
105	Shaft seal	2	2	2	2
109	O-ring	2	2	2	2
109b	Gasket	2	2	2	2

Pos.	Description	LS 300-200-489		LS 300-250-305		LS 300-250-381		LS 350-250-498	
		PN16	PN10	PN16	PN10	PN16	PN10	PN16	PN10
	Kit No	*96840118*	*96840118*	*96840119*	*96902723*	*96840120*	*96902736*	*96840121*	*96840121*
53	Bearing	1	1	1	1	1	1	1	1
54	Bearing	1	1	1	1	1	1	1	1
72a	Gasket	1	1	1	1	1	1	1	1
79	Slinger	2	2	2	2	2	2	2	2
105	Shaft seal	2	2	2	2	2	2	2	2
109	O-ring	2	2	2	2	2	2	2	2
109a	O-ring	2	2	-	-	-	-	2	-
109b	Gasket	-	-	2	2	-	-	-	-
110	O-ring	2	2	-	-	2	2	2	2
113e	Gasket	2	2	-	-	2	2	2	2
113f	Lip seal	2	2	-	-	-	-	2	2
113g	Lip seal	1	1	-	-	-	-	2	2

Pos.	Description	LS 350-250-630		LS 350-300-508		LS 400-350-397	
		BBVP	BBVP	BBVP	BBVP	BBVP	BBVP
		PN16	PN10	PN16	PN10	PN16	PN10
	Kit No	*96843907*	*96843907*	*96843908*	*96843908*	*96840122*	*96840122*
53	Bearing	1	1	1	1	1	1
54	Bearing	1	1	1	1	1	1
72a	Gasket	1	1	1	1	1	1
79	Slinger	2	2	2	2	2	2
105	Shaft seal	2	2	2	2	2	2
109	O-ring	2	2	2	2	2	2
109a	O-ring	2	-	2	2	2	2
110	O-ring	2	2	2	2	2	2
113e	Gasket	2	2	2	2	2	2
113f	Lip seal	2	2	2	2	2	2
113g	Lip seal	2	2	2	2	2	2

Shaft seal (BBQV)

Pos.	Description	LS 65, LS 100-80-241		LS 100-80-241 XE		LS 100-80-356 LS 125		LS 150-125-305	
		PN16	PN10	PN16	PN10	PN16	PN10	PN16	PN10
	Kit No	*96902647*	*96902650*	*96902654*	*96902662*	*96902664*	*96902670*	*96902671*	*96902683*
53	Bearing	1	1	1	1	1	1	1	1
54	Bearing	1	1	1	1	1	1	1	1
66	O-ring	-	-	-	-	2	2	-	-
72a	Gasket	1	1	1	1	1	1	1	1
79	Slinger	2	2	2	2	2	2	2	2
105	Shaft seal	2	2	2	2	2	2	2	2
109	O-ring	-	-	-	-	2	2	2	2
109b	Gasket	2	2	2	2	-	-	-	-
113e	Gasket	2	2	2	2	2	2	2	2

Pos.	Description	LS 150-125-381		LS 200-150-305		LS 200-150-381 LS 200-150-483		LS 200-150-483 X6 LS 200-150-508	
		PN16	PN10	PN16	PN10	PN16	PN10	PN16	PN10
	Kit No	*96902684*	*96902691*	*96902693*	*96902695*	*96902696*	*96902699*	*96902700*	*96902702*
53	Bearing	1	1	1	1	1	1	1	1
54	Bearing	1	1	1	1	1	1	1	1
66	O-ring	-	-	2	2	-	-	2	2
72a	Gasket	1	1	1	1	1	1	1	1
79	Slinger	2	2	2	2	2	2	2	2
105	Shaft seal	2	2	2	2	2	2	2	2
109	O-ring	2	2	2	2	2	2	-	-
109b	Gasket	-	-	-	-	2	2	2	2
110a	Gasket	-	-	-	-	-	-	2	2
113e	Gasket	2	2	2	2	-	-	-	-
113f	Lip seal	-	-	-	-	-	-	2	2

Pos.	Description	LS 250-200-305		LS 250-200-381	
		PN16	PN10	PN16	PN10
	Kit No	*96902705*	*96902709*	*96902713*	*96902715*
53	Bearing	1	1	1	1
54	Bearing	1	1	1	1
72a	Gasket	1	1	1	1
79	Slinger	2	2	-	-
105	Shaft seal	2	2	2	2
109	O-ring	2	2	2	2
109b	Gasket	2	2	2	2

Pos.	Description	LS 300-200-489		LS 300-250-305		LS 300-250-381		LS 350-250-498	
		PN16	PN10	PN16	PN10	PN16	PN10	PN16	PN10
	Kit No	*96902717*	*96902717*	*96902719*	*96902729*	*96902732*	*96902738*	*96902743*	*96902743*
53	Bearing	1	1	1	1	1	1	1	1
54	Bearing	1	1	1	1	1	1	1	1
72a	Gasket	1	1	1	1	1	1	1	1
79	Slinger	2	2	2	2	2	2	2	2
105	Shaft seal	2	2	2	2	2	2	2	2
109	O-ring	2	2	2	2	2	2	2	2
109a	O-ring	2	2	-	-	-	-	-	-
109b	Gasket	-	-	2	2	-	-	-	-

Pos.	Description	LS 300-200-489		LS 300-250-305		LS 300-250-381		LS 350-250-498	
		PN16	PN10	PN16	PN10	PN16	PN10	PN16	PN10
	Kit No	*96902717*	*96902717*	*96902719*	*96902729*	*96902732*	*96902738*	*96902743*	*96902743*
110	O-ring	2	2	-	-	2	2	2	2
113e	Gasket	2	2	-	-	2	2	2	2
113f	Lip seal	2	2	-	-	-	-	2	2
113g	Lip seal	1	1	-	-	-	-	2	2

Pos.	Description	LS 350-250-630		LS 350-300-508		LS 400-350-397	
		PN16	PN10	PN16	PN10	PN16	PN10
	Kit No	*96902744*	*96902744*	*96902747*	*96902747*	*96902757*	*96902757*
53	Bearing	1	1	1	1	1	1
54	Bearing	1	1	1	1	1	1
72a	Gasket	1	1	1	1	1	1
79	Slinger	2	2	2	2	2	2
105	Shaft seal	2	2	2	2	2	2
109	O-ring	2	2	2	2	2	2
109a	O-ring	-	-	2	2	2	2
110	O-ring	2	2	2	2	2	2
113e	Gasket	2	2	2	2	2	2
113f	Lip seal	2	2	2	2	2	2
113g	Lip seal	2	2	2	2	2	2

Wear ring, bronze (B18)

Pos.	Description	LS 65-50-241 LS 65-50-241 331	LS 100-80-241 LS 100-80-241 XE	LS 100-80-356B	LS 100-80-356 LS 125-100-279 LS 125-100-381	LS 125-100-388
	Kit No	*96827589*	*96827617*	*97735851*	*96827614*	*97735910*
24	Roll pin	2	2	2	2	2
45b/c	Wear ring	2	2	2	2	2
65	Snap ring	2	2	-	2	-

Pos.	Description	LS 125-100-305	LS 150-125-305 LS 150-125-381	LS 200-150-305A	LS 200-150-305C
	Kit No	*96827612*	*96827610*	*96827608*	*96827607*
24	Roll pin	2	2	2	2
45b/c	Wear ring	2	2	2	2
65	Snap ring	2	-	2	-

Pos.	Description	LS 200-150-381	LS 200-150-483 LS 200-150-483 X6	LS 200-150-508	LS 250-200-305
	Kit No	*96827606*	*96840041*	*96827604*	*96827602*
24	Roll pin	2	2	2	2
45a/b/c	Wear ring	2	2	2	2
65	Snap ring	-	2	-	-

Pos.	Description	LS 300-200-489	LS 350-250-498	LS 350-250-630	LS 350-300-508
	Kit No	*96827600*	*96840072*	*96840073*	*96840074*
24	Roll pin	2	2	-	-
45a/b/c	Wear ring	2	2	2	2
65	Snap ring	-	-	2	2

Pos.	Description	LS 400-350-397	LS 250-200-381	LS 300-250-305	LS 300-250-305B	LS 300-250-381
	Kit No	*96840075*	*96827601*	*96827598*	*97932523*	*96827596*
24	Roll pin	-	2	2	2	2
45a/b/c	Wear ring	2	2	2	2	2
65	Snap ring	-	-	-	-	-

Wear ring, stainless steel (N5)

Pos.	Description	LS 65-50-241 LS 65-50-241 331	LS 100-80-241 LS 100-80-241 XE	LS 100-80-356B	LS 100-80-356 LS 125-100-279 LS 125-100-381	LS 125-100-388
	Kit No	*96927584*	*96927585*	*97933098*	*96927586*	*97735921*
24	Roll pin	2	2	2	2	2
45b/c	Wear ring	2	2	2	2	2
65	Snap ring	2	2	-	2	-

Pos.	Description	LS 125-100-305	LS 150-125-305 LS 150-125-381	LS 200-150-305A	LS 200-150-305C
	Kit No	*96927587*	*96927588*	*96927589*	*96927590*
24	Roll pin	2	2	2	2
45b/c	Wear ring	2	2	2	2
65	Snap ring	2	-	2	-

Pos.	Description	LS 200-150-381	LS 200-150-483 LS 200-150-483 X6	LS 200-150-508	LS 250-200-305
	Kit No	*96927591*	*96927602*	*96927603*	*96927604*
24	Roll pin	2	2	2	2
45a/b/c	Wear ring	2	2	2	2
65	Snap ring	-	2	-	-

Pos.	Description	LS 300-200-489	LS 350-250-498	LS 350-250-630	LS 350-300-508
	Kit No	*96927606*	*96927609*	*96927610*	*96927611*
24	Roll pin	2	2	-	-
45a/b/c	Wear ring	2	2	2	2
65	Snap ring	-	-	2	2

Pos.	Description	LS 400-350-397	LS 250-200-381	LS 300-250-305	LS 300-250-305BB	LS 300-250-381
	Kit No	*96927612*	*96927605*	*96927607*	*97948031*	*96927608*
24	Roll pin	-	2	2	2	2
45a/b/c	Wear ring	2	2	2	2	2
65	Snap ring	-	-	-	-	-

Coupling

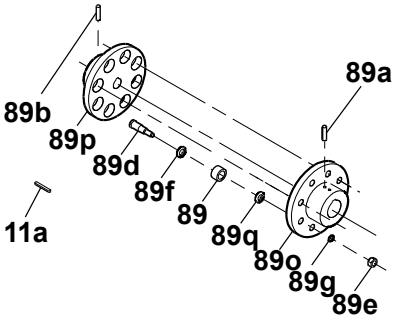

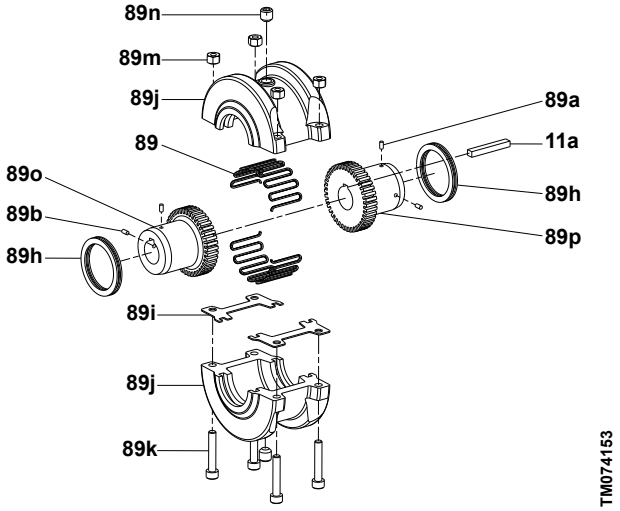

Grundfos standard coupling			Grid coupling
Coupling complete	**Rubber**	**Bolts**	**Coupling complete**
89o:1 x male part 89p:1 x female part 89d:1 set of bolts/rubber parts 89a:1 x hexagon screw 89b:1 x hexagon screw 11a:1 x key	89: 1 set	89d:1 set of bolts 89f:1 set of washers 89q:1 set of washers 89g:1 set of lock washers 89e:1 set of nuts 89:1 set of rubber parts	89o:1 x coupling hub pump match 89p:1 x coupling hub motor match 11a:1 x key

Pump typ	Motor brand	Pole	Power [kW]	Frame size	Shaft diameter [mm]		Coupling type	Grundfos standard coupling, pin bush			Grid coupling	
					Pump	Motor		Kit No	Rubber	Bolts	Coupling complete	Assemble set
LS 65-50-241	MG	2	11	160MB	25.4	42	D180	*99390275*	*96789247*	*96809941*	-	-
LS 65-50-241	MG	2	15	160MD	25.4	42	D180	*99390275*	*96789247*	*96809941*	-	-
LS 65-50-241	MG	2	18.5	160LB	25.4	42	D180	*99390275*	*96789247*	*96809941*	-	-
LS 65-50-241	MG	2	22	180MB	25.4	48	D200	*99390276*	*96789269*	*96809942*	-	-
LS 65-50-241	Siemens	2	30	200L	25.4	55	D200	*99390277*	*96789269*	*96809942*	-	-
LS 65-50-241	Siemens	2	37	200L	25.4	55	D200	*99390277*	*96789269*	*96809942*	-	-
LS 65-50-241	Siemens	2	45	225M	25.4	55	D200	*99390277*	*96789269*	*96809942*	-	-
LS 65-50-241	MMG-G	2	11	160M	25.4	42	D180	*99390275*	*96789247*	*96809941*	-	-
LS 65-50-241	MMG-G	2	15	160M	25.4	42	D180	*99390275*	*96789247*	*96809941*	-	-
LS 65-50-241	MMG-G	2	18.5	160L	25.4	42	D180	*99390275*	*96789247*	*96809941*	-	-
LS 65-50-241	MMG-G	2	22	180M	25.4	48	D200	*99390276*	*96789269*	*96809942*	-	-
LS 65-50-241	MMG-G	2	30	200L	25.4	55	D200	*99390277*	*96789269*	*96809942*	-	-
LS 65-50-241	MMG-G	2	37	200L	25.4	55	D200	*99390277*	*96789269*	*96809942*	-	-
LS 65-50-241	MMG-G	2	45	225MA	25.4	55	D200	*99390277*	*96789269*	*96809942*	-	-
LS 65-50-241	MMG-G	2	55	250MA	25.4	60	D200	*99390278*	*96789269*	*96809942*	-	-
LS 65-50-241	MMG-G	2	75	280SA	25.4	65	D200	*99596717*	*96789269*	*96809942*	-	-
LS 65-50-241	MG	4	1.5	90LC	25.4	24	D125	*99390271*	*96789247*	*96809939*	-	-
LS 65-50-241	MG	4	2.2	100LB	25.4	28	D140	*99390272*	*96789247*	*96809940*	-	-
LS 65-50-241	MG	4	3	100LC	25.4	28	D140	*99390272*	*96789247*	*96809940*	-	-
LS 65-50-241	MG	4	4	112MC	25.4	28	D140	*99390272*	*96789247*	*96809940*	-	-
LS 65-50-241	MG	4	5.5	132SB	25.4	38	D160	*99390274*	*96789247*	*96809941*	-	-
LS 65-50-241	MMG-G	4	1.5	90L	25.4	24	D125	*99390271*	*96789247*	*96809939*	-	-
LS 65-50-241	MMG-G	4	11	160M	25.4	42	D180	*99390275*	*96789247*	*96809941*	-	-
LS 65-50-241	MMG-G	4	2.2	100L	25.4	28	D140	*99390272*	*96789247*	*96809940*	-	-
LS 65-50-241	MMG-G	4	3	100L	25.4	28	D140	*99390272*	*96789247*	*96809940*	-	-
LS 65-50-241	MMG-G	4	4	112M	25.4	28	D140	*99390272*	*96789247*	*96809940*	-	-
LS 65-50-241	MMG-G	4	5.5	132S	25.4	38	D160	*99390274*	*96789247*	*96809941*	-	-

Pump typ	Motor brand	Pole	Power [kW]	Frame size	Shaft diameter [mm]		Coupling type	Grundfos standard coupling, pin bush			Grid coupling	
					Pump	Motor		Kit No	Rubber	Bolts	Coupling complete	Assemble set
LS 65-50-241	MMG-G	4	7.5	132M	25.4	38	D160	99390274	96789247	96809941	-	-
LS 65-50-330	MG	4	11	160MA	25.4	42	D180	99390275	96789247	96809941	-	-
LS 65-50-330	MG	4	15	160LB	25.4	42	D180	99390275	96789247	96809941	-	-
LS 65-50-330	MG	4	4	112MC	25.4	28	D140	99390272	96789247	96809940	-	-
LS 65-50-330	MG	4	5.5	132SB	25.4	38	D160	99390274	96789247	96809941	-	-
LS 65-50-330	MG	4	7.5	132MB	25.4	38	D160	99390274	96789247	96809941	-	-
LS 65-50-330	MMG-G	4	11	160M	25.4	42	D180	99390275	96789247	96809941	-	-
LS 65-50-330	MMG-G	4	15	160L	25.4	42	D180	99390275	96789247	96809941	-	-
LS 65-50-330	MMG-G	4	18.5	180M	25.4	48	D200	99390276	96789269	96809942	-	-
LS 65-50-330	MMG-G	4	22	180L	25.4	48	D200	99390276	96789269	96809942	-	-
LS 65-50-330	MMG-G	4	4	112M	25.4	28	D140	99390272	96789247	96809940	-	-
LS 65-50-330	MMG-G	4	5.5	132S	25.4	38	D160	99390274	96789247	96809941	-	-
LS 65-50-330	MMG-G	4	7.5	132M	25.4	38	D160	99390274	96789247	96809941	-	-
LS 100-80-241	MG	2	15	160MD	25.4	42	D180	99390275	96789247	96809941	-	-
LS 100-80-241	MG	2	18.5	160LB	25.4	42	D180	99390275	96789247	96809941	-	-
LS 100-80-241	MG	2	22	180MB	25.4	48	D200	99390276	96789269	96809942	-	-
LS 100-80-241	Siemens	2	30	200L	25.4	55	D200	99390277	96789269	96809942	-	-
LS 100-80-241	Siemens	2	37	200L	25.4	55	D200	99390277	96789269	96809942	-	-
LS 100-80-241	Siemens	2	45	225M	30.16	55	D200	99409898	96789269	96809942	-	-
LS 100-80-241	Siemens	2	55	250M	30.16	60	D200	99596693	96789269	96809942	-	-
LS 100-80-241	Siemens	2	75	280S	30.16	65	D200	99596687	96789269	96809942	-	-
LS 100-80-241	MG	2	15	160MD	25.4	42	D180	99390275	96789247	96809941	-	-
LS 100-80-241	MMG-G	2	110	315SA	30.16	65	D200	99596687	96789269	96809942	-	-
LS 100-80-241	MMG-G	2	15	160M	25.4	42	D180	99390275	96789247	96809941	-	-
LS 100-80-241	MMG-G	2	18.5	160L	25.4	42	D180	99390275	96789247	96809941	-	-
LS 100-80-241	MMG-G	2	22	180M	25.4	48	D200	99390276	96789269	96809942	-	-
LS 100-80-241	MMG-G	2	30	200L	25.4	55	D200	99390277	96789269	96809942	-	-
LS 100-80-241	MMG-G	2	37	200L	25.4	55	D200	99390277	96789269	96809942	-	-
LS 100-80-241	MMG-G	2	45	225MA	25.4	55	D200	99390277	96789269	96809942	-	-
LS 100-80-241	MMG-G	2	45	225MA	30.16	55	D200	99409898	96789269	96809942	-	-
LS 100-80-241	MMG-G	2	55	250MA	30.16	60	D200	99596693	96789269	96809942	-	-
LS 100-80-241	MMG-G	2	75	280SA	30.16	65	D200	99596687	96789269	96809942	-	-
LS 100-80-241	MMG-G	2	90	280MA	30.16	65	D200	99596687	96789269	96809942	-	-
LS 100-80-241	MG	4	2.2	100LB	25.4	28	D140	99390272	96789247	96809940	-	-
LS 100-80-241	MG	4	3	100LC	25.4	28	D140	99390272	96789247	96809940	-	-
LS 100-80-241	MG	4	4	112MC	25.4	28	D140	99390272	96789247	96809940	-	-
LS 100-80-241	MG	4	5.5	132SB	25.4	38	D160	99390274	96789247	96809941	-	-
LS 100-80-241	MG	4	7.5	132MB	25.4	38	D160	99390274	96789247	96809941	-	-
LS 100-80-241	MMG-G	4	11	160M	25.4	42	D180	99390275	96789247	96809941	-	-
LS 100-80-241	MMG-G	4	15	160L	25.4	42	D180	99390275	96789247	96809941	-	-
LS 100-80-241	MMG-G	4	2.2	100L	25.4	28	D140	99390272	96789247	96809940	-	-
LS 100-80-241	MMG-G	4	3	100L	25.4	28	D140	99390272	96789247	96809940	-	-
LS 100-80-241	MMG-G	4	4	112M	25.4	28	D140	99390272	96789247	96809940	-	-
LS 100-80-241	MMG-G	4	5.5	132S	25.4	38	D160	99390274	96789247	96809941	-	-
LS 100-80-241	MMG-G	4	7.5	132M	25.4	38	D160	99390274	96789247	96809941	-	-
LS 100-80-356	MG	4	11	160MA	38.1	42	D180	99390282	96789247	96809941	-	-
LS 100-80-356	MG	4	15	160LB	38.1	42	D180	99390282	96789247	96809941	-	-
LS 100-80-356	Siemens	4	18.5	180M	38.1	48	D200	99390281	96789269	96809942	-	-
LS 100-80-356	Siemens	4	22	180L	38.1	48	D200	99390281	96789269	96809942	-	-
LS 100-80-356	Siemens	4	30	200L	38.1	55	D200	99390283	96789269	96809942	-	-
LS 100-80-356	MG	4	7.5	132MB	38.1	38	D160	99390280	96789247	96809941	-	-
LS 100-80-356	MMG-G	4	11	160M	38.1	42	D180	99390282	96789247	96809941	-	-

Pump typ	Motor brand	Pole	Power [kW]	Frame size	Shaft diameter [mm]		Coupling type	Grundfos standard coupling, pin bush			Grid coupling	
					Pump	Motor		Kit No	Rubber	Bolts	Coupling complete	Assemble set
LS 100-80-356	MMG-G	4	15	160L	38.1	42	D180	99390282	96789247	96809941	-	-
LS 100-80-356	MMG-G	4	18.5	180M	38.1	48	D200	99390281	96789269	96809942	-	-
LS 100-80-356	MMG-G	4	22	180L	38.1	48	D200	99390281	96789269	96809942	-	-
LS 100-80-356	MMG-G	4	30	200L	38.1	55	D200	99390283	96789269	96809942	-	-
LS 100-80-356	MMG-G	4	37	225S	38.1	60	D224	99390284	96789269	96809942	-	-
LS 100-80-356	MMG-G	4	45	225M	38.1	60	D224	99390284	96789269	96809942	-	-
LS 100-80-356	MMG-G	4	7.5	132M	38.1	38	D160	99390280	96789247	96809941	-	-
LS 125-100-279	MG	2	18.5	160LB	38.1	42	D180	99390282	96789247	96809941	-	-
LS 125-100-279	MG	2	22	180MB	38.1	48	D200	99390281	96789269	96809942	-	-
LS 125-100-279	Siemens	2	30	200L	38.1	55	D200	99390283	96789269	96809942	-	-
LS 125-100-279	Siemens	2	37	200L	38.1	55	D200	99390283	96789269	96809942	-	-
LS 125-100-279	Siemens	2	45	225M	38.1	55	D200	99390283	96789269	96809942	-	-
LS 125-100-279	Siemens	2	55	250M	38.1	60	D224	99390284	96789269	96809942	-	-
LS 125-100-279	Siemens	2	75	280S	38.1	65	D224	99390285	96789269	96809942	-	-
LS 125-100-279	MMG-G	2	110	315SA	38.1	65	D224	99390285	96789269	96809942	-	-
LS 125-100-279	MMG-G	2	18.5	160L	38.1	42	D180	99390282	96789247	96809941	-	-
LS 125-100-279	MMG-G	2	22	180M	38.1	48	D200	99390281	96789269	96809942	-	-
LS 125-100-279	MMG-G	2	30	200L	38.1	55	D200	99390283	96789269	96809942	-	-
LS 125-100-279	MMG-G	2	37	200L	38.1	55	D200	99390283	96789269	96809942	-	-
LS 125-100-279	MMG-G	2	45	225MA	38.1	55	D200	99390283	96789269	96809942	-	-
LS 125-100-279	MMG-G	2	55	250MA	38.1	60	D224	99390284	96789269	96809942	-	-
LS 125-100-279	MMG-G	2	75	280SA	38.1	65	D224	99390285	96789269	96809942	-	-
LS 125-100-279	MMG-G	2	90	280MA	38.1	65	D224	99390285	96789269	96809942	-	-
LS 125-100-279	MG	4	11	160MA	38.1	42	D180	99390282	96789247	96809941	-	-
LS 125-100-279	MG	4	15	160LB	38.1	42	D180	99390282	96789247	96809941	-	-
LS 125-100-279	MG	4	2.2	100LB	38.1	28	D160	99390279	96789247	96809941	-	-
LS 125-100-279	MG	4	3	100LC	38.1	28	D160	99390279	96789247	96809941	-	-
LS 125-100-279	MG	4	4	112MC	38.1	28	D160	99390279	96789247	96809941	-	-
LS 125-100-279	MG	4	5.5	132SB	38.1	38	D160	99390280	96789247	96809941	-	-
LS 125-100-279	MG	4	7.5	132MB	38.1	38	D160	99390280	96789247	96809941	-	-
LS 125-100-279	MMG-G	4	11	160M	38.1	42	D180	99390282	96789247	96809941	-	-
LS 125-100-279	MMG-G	4	15	160L	38.1	42	D180	99390282	96789247	96809941	-	-
LS 125-100-279	MMG-G	4	18.5	180M	38.1	48	D200	99390281	96789269	96809942	-	-
LS 125-100-279	MMG-G	4	2.2	100L	38.1	28	D160	99390279	96789247	96809941	-	-
LS 125-100-279	MMG-G	4	22	180L	38.1	48	D200	99390281	96789269	96809942	-	-
LS 125-100-279	MMG-G	4	3	100L	38.1	28	D160	99390279	96789247	96809941	-	-
LS 125-100-279	MMG-G	4	4	112M	38.1	28	D160	99390279	96789247	96809941	-	-
LS 125-100-279	MMG-G	4	5.5	132S	38.1	38	D160	99390280	96789247	96809941	-	-
LS 125-100-279	MMG-G	4	7.5	132M	38.1	38	D160	99390280	96789247	96809941	-	-
LS 125-100-305	Siemens	2	30	200L	38.1	55	D200	99390283	96789269	96809942	-	-
LS 125-100-305	Siemens	2	37	200L	38.1	55	D200	99390283	96789269	96809942	-	-
LS 125-100-305	Siemens	2	45	225M	38.1	55	D200	99390283	96789269	96809942	-	-
LS 125-100-305	Siemens	2	55	250M	38.1	60	D224	99390284	96789269	96809942	-	-
LS 125-100-305	Siemens	2	75	280S	38.1	65	D224	99390285	96789269	96809942	-	-
LS 125-100-305	Siemens	2	90	280M	38.1	65	D224	99390285	96789269	96809942	-	-
LS 125-100-305	MMG-G	2	110	315SA	38.1	65	D224	99390285	96789269	96809942	-	-
LS 125-100-305	MMG-G	2	30	200L	38.1	55	D200	99390283	96789269	96809942	-	-
LS 125-100-305	MMG-G	2	37	200L	38.1	55	D200	99390283	96789269	96809942	-	-
LS 125-100-305	MMG-G	2	45	225MA	38.1	55	D200	99390283	96789269	96809942	-	-
LS 125-100-305	MMG-G	2	55	250MA	38.1	60	D224	99390284	96789269	96809942	-	-
LS 125-100-305	MMG-G	2	75	280SA	38.1	65	D224	99390285	96789269	96809942	-	-
LS 125-100-305	MMG-G	2	90	280MA	38.1	65	D224	99390285	96789269	96809942	-	-

Pump typ	Motor brand	Pole	Power [kW]	Frame size	Shaft diameter [mm]		Coupling type	Grundfos standard coupling, pin bush			Grid coupling	
					Pump	Motor		Kit No	Rubber	Bolts	Coupling complete	Assemble set
LS 125-100-305	MG	4	11	160MA	38.1	42	D180	99390282	96789247	96809941	-	-
LS 125-100-305	MG	4	15	160LB	38.1	42	D180	99390282	96789247	96809941	-	-
LS 125-100-305	Siemens	4	18.5	180M	38.1	48	D200	99390281	96789269	96809942	-	-
LS 125-100-305	Siemens	4	22	180L	38.1	48	D200	99390281	96789269	96809942	-	-
LS 125-100-305	MG	4	4	112MC	38.1	28	D160	99390279	96789247	96809941	-	-
LS 125-100-305	MG	4	5.5	132SB	38.1	38	D160	99390280	96789247	96809941	-	-
LS 125-100-305	MG	4	7.5	132MB	38.1	38	D160	99390280	96789247	96809941	-	-
LS 125-100-305	MMG-G	4	11	160M	38.1	42	D180	99390282	96789247	96809941	-	-
LS 125-100-305	MMG-G	4	15	160L	38.1	42	D180	99390282	96789247	96809941	-	-
LS 125-100-305	MMG-G	4	18.5	180M	38.1	48	D200	99390281	96789269	96809942	-	-
LS 125-100-305	MMG-G	4	22	180L	38.1	48	D200	99390281	96789269	96809942	-	-
LS 125-100-305	MMG-G	4	30	200L	38.1	55	D200	99390283	96789269	96809942	-	-
LS 125-100-305	MMG-G	4	37	225S	38.1	60	D224	99390284	96789269	96809942	-	-
LS 125-100-305	MMG-G	4	4	112M	38.1	28	D160	99390279	96789247	96809941	-	-
LS 125-100-305	MMG-G	4	45	225M	38.1	60	D224	99390284	96789269	96809942	-	-
LS 125-100-305	MMG-G	4	5.5	132S	38.1	38	D160	99390280	96789247	96809941	-	-
LS 125-100-305	MMG-G	4	7.5	132M	38.1	38	D160	99390280	96789247	96809941	-	-
LS 125-100-388	MG	4	11	160MA	38.1	42	D180	99390282	96789247	96809941	-	-
LS 125-100-388	MG	4	15	160LB	38.1	42	D180	99390282	96789247	96809941	-	-
LS 125-100-388	Siemens	4	18.5	180M	38.1	48	D200	99390281	96789269	96809942	-	-
LS 125-100-388	Siemens	4	22	180L	38.1	48	D200	99390281	96789269	96809942	-	-
LS 125-100-388	Siemens	4	30	200L	38.1	55	D200	99390283	96789269	96809942	-	-
LS 125-100-388	Siemens	4	37	225S	38.1	60	D224	99390284	96789269	96809942	-	-
LS 125-100-388	Siemens	4	45	225M	38.1	60	D224	99390284	96789269	96809942	-	-
LS 125-100-388	Siemens	4	55	250M	38.1	65	D224	99390285	96789269	96809942	-	-
LS 125-100-388	Siemens	4	75	280S	38.1	75	D250	99390286	96789274	96809943	-	-
LS 125-100-388	MMG-G	4	11	160M	38.1	42	D180	99390282	96789247	96809941	-	-
LS 125-100-388	MMG-G	4	110	315S	38.1	80	D250	99390288	96789274	96809943	-	-
LS 125-100-388	MMG-G	4	15	160L	38.1	42	D180	99390282	96789247	96809941	-	-
LS 125-100-388	MMG-G	4	18.5	180M	38.1	48	D200	99390281	96789269	96809942	-	-
LS 125-100-388	MMG-G	4	22	180L	38.1	48	D200	99390281	96789269	96809942	-	-
LS 125-100-388	MMG-G	4	30	200L	38.1	55	D200	99390283	96789269	96809942	-	-
LS 125-100-388	MMG-G	4	37	225S	38.1	60	D224	99390284	96789269	96809942	-	-
LS 125-100-388	MMG-G	4	45	225M	38.1	60	D224	99390284	96789269	96809942	-	-
LS 125-100-388	MMG-G	4	55	250M	38.1	65	D224	99390285	96789269	96809942	-	-
LS 125-100-388	MMG-G	4	75	280S	38.1	75	D250	99390286	96789274	96809943	-	-
LS 125-100-388	MMG-G	4	90	280M	38.1	75	D250	99390286	96789274	96809943	-	-
LS 150-125-305	MG	4	11	160MA	38.1	42	D180	99390282	96789247	96809941	-	-
LS 150-125-305	MG	4	15	160LB	38.1	42	D180	99390282	96789247	96809941	-	-
LS 150-125-305	Siemens	4	18.5	180M	38.1	48	D200	99390281	96789269	96809942	-	-
LS 150-125-305	Siemens	4	22	180L	38.1	48	D200	99390281	96789269	96809942	-	-
LS 150-125-305	Siemens	4	30	200L	38.1	55	D200	99390283	96789269	96809942	-	-
LS 150-125-305	Siemens	4	37	225S	38.1	60	D224	99390284	96789269	96809942	-	-
LS 150-125-305	MG	4	5.5	132SB	38.1	38	D160	99390280	96789247	96809941	-	-
LS 150-125-305	MG	4	7.5	132MB	38.1	38	D160	99390280	96789247	96809941	-	-
LS 150-125-305	MMG-G	4	11	160M	38.1	42	D180	99390282	96789247	96809941	-	-
LS 150-125-305	MMG-G	4	15	160L	38.1	42	D180	99390282	96789247	96809941	-	-
LS 150-125-305	MMG-G	4	18.5	180M	38.1	48	D200	99390281	96789269	96809942	-	-
LS 150-125-305	MMG-G	4	22	180L	38.1	48	D200	99390281	96789269	96809942	-	-
LS 150-125-305	MMG-G	4	30	200L	38.1	55	D200	99390283	96789269	96809942	-	-
LS 150-125-305	MMG-G	4	37	225S	38.1	60	D224	99390284	96789269	96809942	-	-
LS 150-125-305	MMG-G	4	45	225M	38.1	60	D224	99390284	96789269	96809942	-	-

Pump typ	Motor brand	Pole	Power [kW]	Frame size	Shaft diameter [mm]		Coupling type	Grundfos standard coupling, pin bush			Grid coupling	
					Pump	Motor		Kit No	Rubber	Bolts	Coupling complete	Assemble set
LS 150-125-305	MMG-G	4	5.5	132S	38.1	38	D160	99390280	96789247	96809941	-	-
LS 150-125-305	MMG-G	4	55	250M	38.1	65	D224	99390285	96789269	96809942	-	-
LS 150-125-305	MMG-G	4	7.5	132M	38.1	38	D160	99390280	96789247	96809941	-	-
LS 150-125-381	MG	4	15	160LB	38.1	42	D180	99390282	96789247	96809941	-	-
LS 150-125-381	Siemens	4	18.5	180M	38.1	48	D200	99390281	96789269	96809942	-	-
LS 150-125-381	Siemens	4	22	180L	38.1	48	D200	99390281	96789269	96809942	-	-
LS 150-125-381	Siemens	4	30	200L	38.1	55	D200	99390283	96789269	96809942	-	-
LS 150-125-381	Siemens	4	37	225S	38.1	60	D224	99390284	96789269	96809942	-	-
LS 150-125-381	Siemens	4	45	225M	38.1	60	D224	99390284	96789269	96809942	-	-
LS 150-125-381	Siemens	4	55	250M	38.1	65	D224	99390285	96789269	96809942	-	-
LS 150-125-381	Siemens	4	75	280S	38.1	75	D250	99390286	96789274	96809943	-	-
LS 150-125-381	MMG-G	4	110	315S	38.1	80	D250	99390288	96789274	96809943	-	-
LS 150-125-381	MMG-G	4	132	315M	38.1	80	D250	99390288	96789274	96809943	-	-
LS 150-125-381	MMG-G	4	15	160L	38.1	42	D180	99390282	96789247	96809941	-	-
LS 150-125-381	MMG-G	4	18.5	180M	38.1	48	D200	99390281	96789269	96809942	-	-
LS 150-125-381	MMG-G	4	22	180L	38.1	48	D200	99390281	96789269	96809942	-	-
LS 150-125-381	MMG-G	4	30	200L	38.1	55	D200	99390283	96789269	96809942	-	-
LS 150-125-381	MMG-G	4	37	225S	38.1	60	D224	99390284	96789269	96809942	-	-
LS 150-125-381	MMG-G	4	45	225M	38.1	60	D224	99390284	96789269	96809942	-	-
LS 150-125-381	MMG-G	4	55	250M	38.1	65	D224	99390285	96789269	96809942	-	-
LS 150-125-381	MMG-G	4	75	280S	38.1	75	D250	99390286	96789274	96809943	-	-
LS 150-125-381	MMG-G	4	90	280M	38.1	75	D250	99390286	96789274	96809943	-	-
LS 200-150-305	Siemens	4	45	225M	38.1	60	D224	99390284	96789269	96809942	-	-
LS 200-150-305	MG	4	11	160MA	38.1	42	D180	99390282	96789247	96809941	-	-
LS 200-150-305	MG	4	15	160LB	38.1	42	D180	99390282	96789247	96809941	-	-
LS 200-150-305	Siemens	4	18.5	180M	38.1	48	D200	99390281	96789269	96809942	-	-
LS 200-150-305	Siemens	4	22	180L	38.1	48	D200	99390281	96789269	96809942	-	-
LS 200-150-305	Siemens	4	30	200L	38.1	55	D200	99390283	96789269	96809942	-	-
LS 200-150-305	Siemens	4	37	225S	38.1	60	D224	99390284	96789269	96809942	-	-
LS 200-150-305	MMG-G	4	45	225M	38.1	60	D224	99390284	96789269	96809942	-	-
LS 200-150-305	MMG-G	4	55	250M	38.1	65	D224	99390285	96789269	96809942	-	-
LS 200-150-305	MMG-G	4	75	280S	38.1	75	D250	99390286	96789274	96809943	-	-
LS 200-150-305	MMG-G	4	11	160M	38.1	42	D180	99390282	96789247	96809941	-	-
LS 200-150-305	MMG-G	4	15	160L	38.1	42	D180	99390282	96789247	96809941	-	-
LS 200-150-305	MMG-G	4	18.5	180M	38.1	48	D200	99390281	96789269	96809942	-	-
LS 200-150-305	MMG-G	4	22	180L	38.1	48	D200	99390281	96789269	96809942	-	-
LS 200-150-305	MMG-G	4	30	200L	38.1	55	D200	99390283	96789269	96809942	-	-
LS 200-150-305	MMG-G	4	37	225S	38.1	60	D224	99390284	96789269	96809942	-	-
LS 200-150-381	Siemens	4	110	315S	44.45	80	D250	99390303	96789274	96809943	-	-
LS 200-150-381	Siemens	4	18.5	180M	44.45	48	D200	99390298	96789269	96809942	-	-
LS 200-150-381	Siemens	4	22	180L	44.45	48	D200	99390298	96789269	96809942	-	-
LS 200-150-381	Siemens	4	30	200L	44.45	55	D200	99390299	96789269	96809942	-	-
LS 200-150-381	Siemens	4	37	225S	44.45	60	D224	99390300	96789269	96809942	-	-
LS 200-150-381	Siemens	4	45	225M	44.45	60	D224	99390300	96789269	96809942	-	-
LS 200-150-381	Siemens	4	55	250M	44.45	65	D224	99390301	96789269	96809942	-	-
LS 200-150-381	Siemens	4	75	280S	44.45	75	D250	99390302	96789274	96809943	-	-
LS 200-150-381	Siemens	4	90	280M	44.45	75	D250	99390302	96789274	96809943	-	-
LS 200-150-381	MMG-G	4	110	315S	44.45	80	D250	99390303	96789274	96809943	-	-
LS 200-150-381	MMG-G	4	132	315M	44.45	80	D250	99390303	96789274	96809943	-	-
LS 200-150-381	MMG-G	4	160	315L	44.45	80	D250	99390303	96789274	96809943	-	-
LS 200-150-381	MMG-G	4	18.5	180M	44.45	48	D200	99390298	96789269	96809942	-	-
LS 200-150-381	MMG-G	4	200	315L	44.45	80	D250	99390303	96789274	96809943	-	-

Pump typ	Motor brand	Pole	Power [kW]	Frame size	Shaft diameter [mm]		Coupling type	Grundfos standard coupling, pin bush			Grid coupling	
					Pump	Motor		Kit No	Rubber	Bolts	Coupling complete	Assemble set
LS 200-150-381	MMG-G	4	22	180L	44.45	48	D200	*99390298*	*96789269*	*96809942*	-	-
LS 200-150-381	MMG-G	4	30	200L	44.45	55	D200	*99390299*	*96789269*	*96809942*	-	-
LS 200-150-381	MMG-G	4	37	225S	44.45	60	D224	*99390300*	*96789269*	*96809942*	-	-
LS 200-150-381	MMG-G	4	45	225M	44.45	60	D224	*99390300*	*96789269*	*96809942*	-	-
LS 200-150-381	MMG-G	4	55	250M	44.45	65	D224	*99390301*	*96789269*	*96809942*	-	-
LS 200-150-381	MMG-G	4	75	280S	44.45	75	D250	*99390302*	*96789274*	*96809943*	-	-
LS 200-150-381	MMG-G	4	90	280M	44.45	75	D250	*99390302*	*96789274*	*96809943*	-	-
LS 200-150-483	Siemens	4	110	315S	44.45	80	D250	*99390303*	*96789274*	*96809943*	-	-
LS 200-150-483	Siemens	4	132	315M	44.45	80	D250	*99390303*	*96789274*	*96809943*	-	-
LS 200-150-483	Siemens	4	160	315L	44.45	80	D250	*99390303*	*96789274*	*96809943*	-	-
LS 200-150-483	Siemens	4	55	250M	44.45	65	D224	*99390301*	*96789269*	*96809942*	-	-
LS 200-150-483	Siemens	4	75	280S	44.45	75	D250	*99390302*	*96789274*	*96809943*	-	-
LS 200-150-483	Siemens	4	90	280M	44.45	75	D250	*99390302*	*96789274*	*96809943*	-	-
LS 200-150-483	MMG-G	4	110	315S	44.45	80	D250	*99390303*	*96789274*	*96809943*	-	-
LS 200-150-483	MMG-G	4	110	315S	50.8	80	D250	*99596703*	*96789274*	*96809943*	-	-
LS 200-150-483	MMG-G	4	132	315M	50.8	80	D250	*99596703*	*96789274*	*96809943*	-	-
LS 200-150-483	MMG-G	4	160	315L	50.8	80	D250	*99596703*	*96789274*	*96809943*	-	-
LS 200-150-483	MMG-G	4	200	315L	50.8	80	D250	*99596703*	*96789274*	*96809943*	-	-
LS 200-150-483	MMG-G	4	250	315M	50.8	100	D250	*99596704*	*96789274*	*96809943*	-	-
LS 200-150-483	MMG-G	4	55	250M	44.45	65	D224	*99390301*	*96789269*	*96809942*	-	-
LS 200-150-483	MMG-G	4	75	280S	44.45	75	D250	*99390302*	*96789274*	*96809943*	-	-
LS 200-150-483	MMG-G	4	90	280M	44.45	75	D250	*99390302*	*96789274*	*96809943*	-	-
LS 200-150-483	Siemens	6	15	180L	44.45	48	D200	*99390298*	*96789269*	*96809942*	-	-
LS 200-150-483	Siemens	6	18.5	200L	44.45	55	D200	*99390299*	*96789269*	*96809942*	-	-
LS 200-150-483	Siemens	6	22	200L	44.45	55	D200	*99390299*	*96789269*	*96809942*	-	-
LS 200-150-483	Siemens	6	30	225M	44.45	60	D224	*99390300*	*96789269*	*96809942*	-	-
LS 200-150-483	Siemens	6	37	250M	44.45	65	D224	*99390301*	*96789269*	*96809942*	-	-
LS 200-150-483	Siemens	6	45	280S	44.45	75	D250	*99390302*	*96789274*	*96809943*	-	-
LS 200-150-483	MMG-G	6	15	180L	44.45	48	D200	*99390298*	*96789269*	*96809942*	-	-
LS 200-150-483	MMG-G	6	18.5	200L	44.45	55	D200	*99390299*	*96789269*	*96809942*	-	-
LS 200-150-483	MMG-G	6	22	200L	44.45	55	D200	*99390299*	*96789269*	*96809942*	-	-
LS 200-150-483	MMG-G	6	30	225M	44.45	60	D224	*99390300*	*96789269*	*96809942*	-	-
LS 200-150-483	MMG-G	6	37	250M	44.45	65	D224	*99390301*	*96789269*	*96809942*	-	-
LS 200-150-483	MMG-G	6	45	280S	44.45	75	D250	*99390302*	*96789274*	*96809943*	-	-
LS 200-150-483	MMG-G	6	55	280M	44.45	75	D250	*99390302*	*96789274*	*96809943*	-	-
LS 200-150-483	MMG-G	6	75	315S	44.45	80	D250	*99390303*	*96789274*	*96809943*	-	-
LS 200-150-508	Siemens	4	110	315S	53.98	80	D250	*99390307*	*96789274*	*96809943*	-	-
LS 200-150-508	Siemens	4	132	315M	53.98	80	D250	*99390307*	*96789274*	*96809943*	-	-
LS 200-150-508	Siemens	4	160	315L	53.98	80	D250	*99390307*	*96789274*	*96809943*	-	-
LS 200-150-508	Siemens	4	200	315L	53.98	80	D250	*99390307*	*96789274*	*96809943*	-	-
LS 200-150-508	Siemens	4	250	315L	53.98	85	D250	*99390308*	*96789274*	*96809943*	-	-
LS 200-150-508	Siemens	4	55	250M	53.98	65	D224	*99390305*	*96789269*	*96809942*	-	-
LS 200-150-508	Siemens	4	75	280S	53.98	75	D250	*99390306*	*96789274*	*96809943*	-	-
LS 200-150-508	Siemens	4	90	280M	53.98	75	D250	*99390306*	*96789274*	*96809943*	-	-
LS 200-150-508	MMG-G	4	110	315S	53.98	80	D250	*99390307*	*96789274*	*96809943*	-	-
LS 200-150-508	MMG-G	4	132	315M	53.98	80	D250	*99390307*	*96789274*	*96809943*	-	-
LS 200-150-508	MMG-G	4	160	315L	53.98	80	D250	*99390307*	*96789274*	*96809943*	-	-
LS 200-150-508	MMG-G	4	200	315L	53.98	80	D250	*99390307*	*96789274*	*96809943*	-	-
LS 200-150-508	MMG-G	4	250	315M	53.98	100	D250	*99596705*	*96789274*	*96809943*	-	-
LS 200-150-508	MMG-G	4	315	355L	53.98	100	GRID 110	-	-	-	*99596706*	*99392619*
LS 200-150-508	MMG-G	4	355	355C	53.98	100	GRID 110	-	-	-	*99596706*	*99392619*
LS 200-150-508	MMG-G	4	55	250M	53.98	65	D224	*99390305*	*96789269*	*96809942*	-	-

Pump typ	Motor brand	Pole	Power [kW]	Frame size	Shaft diameter [mm]		Coupling type	Grundfos standard coupling, pin bush			Grid coupling	
					Pump	Motor		Kit No	Rubber	Bolts	Coupling complete	Assemble set
LS 200-150-508	MMG-G	4	75	280S	53.98	75	D250	99390306	96789274	96809943	-	-
LS 200-150-508	MMG-G	4	90	280M	53.98	75	D250	99390306	96789274	96809943	-	-
LS 200-150-508	Siemens	6	18.5	200L	53.98	55	D200	99390317	96789269	96809942	-	-
LS 200-150-508	Siemens	6	22	200L	53.98	55	D200	99390317	96789269	96809942	-	-
LS 200-150-508	Siemens	6	30	225M	53.98	60	D224	99390318	96789269	96809942	-	-
LS 200-150-508	Siemens	6	37	250M	53.98	65	D224	99390305	96789269	96809942	-	-
LS 200-150-508	Siemens	6	45	280S	53.98	75	D250	99390306	96789274	96809943	-	-
LS 200-150-508	Siemens	6	55	280M	53.98	75	D250	99390306	96789274	96809943	-	-
LS 200-150-508	Siemens	6	75	315S	53.98	80	D250	99390307	96789274	96809943	-	-
LS 200-150-508	MMG-G	6	110	315L	53.98	80	D250	99390307	96789274	96809943	-	-
LS 200-150-508	MMG-G	6	132	315L	53.98	80	D250	99390307	96789274	96809943	-	-
LS 200-150-508	MMG-G	6	18.5	200L	53.98	55	D200	99390317	96789269	96809942	-	-
LS 200-150-508	MMG-G	6	22	200L	53.98	55	D200	99390317	96789269	96809942	-	-
LS 200-150-508	MMG-G	6	30	225M	53.98	60	D224	99390318	96789269	96809942	-	-
LS 200-150-508	MMG-G	6	37	250M	53.98	65	D224	99390305	96789269	96809942	-	-
LS 200-150-508	MMG-G	6	45	280S	53.98	75	D250	99390306	96789274	96809943	-	-
LS 200-150-508	MMG-G	6	55	280M	53.98	75	D250	99390306	96789274	96809943	-	-
LS 200-150-508	MMG-G	6	75	315S	53.98	80	D250	99390307	96789274	96809943	-	-
LS 200-150-508	MMG-G	6	90	315M	53.98	80	D250	99390307	96789274	96809943	-	-
LS 250-200-305	MG	4	15	160LB	44.45	42	D180	99390309	96789247	96809941	-	-
LS 250-200-305	Siemens	4	18.5	180M	44.45	48	D200	99390298	96789269	96809942	-	-
LS 250-200-305	Siemens	4	22	180L	44.45	48	D200	99390298	96789269	96809942	-	-
LS 250-200-305	Siemens	4	30	200L	44.45	55	D200	99390299	96789269	96809942	-	-
LS 250-200-305	Siemens	4	37	225S	44.45	60	D224	99390300	96789269	96809942	-	-
LS 250-200-305	Siemens	4	45	225M	44.45	60	D224	99390300	96789269	96809942	-	-
LS 250-200-305	Siemens	4	55	250M	44.45	65	D224	99390301	96789269	96809942	-	-
LS 250-200-305	MMG-G	4	110	315S	44.45	80	D250	99390303	96789274	96809943	-	-
LS 250-200-305	MMG-G	4	15	160L	44.45	42	D180	99390309	96789247	96809941	-	-
LS 250-200-305	MMG-G	4	18.5	180M	44.45	48	D200	99390298	96789269	96809942	-	-
LS 250-200-305	MMG-G	4	22	180L	44.45	48	D200	99390298	96789269	96809942	-	-
LS 250-200-305	MMG-G	4	30	200L	44.45	55	D200	99390299	96789269	96809942	-	-
LS 250-200-305	MMG-G	4	37	225S	44.45	60	D224	99390300	96789269	96809942	-	-
LS 250-200-305	MMG-G	4	45	225M	44.45	60	D224	99390300	96789269	96809942	-	-
LS 250-200-305	MMG-G	4	55	250M	44.45	65	D224	99390301	96789269	96809942	-	-
LS 250-200-305	MMG-G	4	75	280S	44.45	75	D250	99390302	96789274	96809943	-	-
LS 250-200-305	MMG-G	4	90	280M	44.45	75	D250	99390302	96789274	96809943	-	-
LS 250-200-381	Siemens	4	110	315S	44.45	80	D250	99390303	96789274	96809943	-	-
LS 250-200-381	Siemens	4	132	315M	44.45	80	D250	99390303	96789274	96809943	-	-
LS 250-200-381	Siemens	4	160	315L	44.45	80	D250	99390303	96789274	96809943	-	-
LS 250-200-381	Siemens	4	30	200L	44.45	55	D200	99390299	96789269	96809942	-	-
LS 250-200-381	Siemens	4	37	225S	44.45	60	D224	99390300	96789269	96809942	-	-
LS 250-200-381	Siemens	4	45	225M	44.45	60	D224	99390300	96789269	96809942	-	-
LS 250-200-381	Siemens	4	55	250M	44.45	65	D224	99390301	96789269	96809942	-	-
LS 250-200-381	Siemens	4	75	280S	44.45	75	D250	99390302	96789274	96809943	-	-
LS 250-200-381	Siemens	4	90	280M	44.45	75	D250	99390302	96789274	96809943	-	-
LS 250-200-381	MMG-G	4	110	315S	44.45	80	D250	99390303	96789274	96809943	-	-
LS 250-200-381	MMG-G	4	132	315M	44.45	80	D250	99390303	96789274	96809943	-	-
LS 250-200-381	MMG-G	4	160	315L	44.45	80	D250	99390303	96789274	96809943	-	-
LS 250-200-381	MMG-G	4	200	315L	44.45	80	D250	99390303	96789274	96809943	-	-
LS 250-200-381	MMG-G	4	250	315M	44.45	100	D250	99596707	96789274	96809943	-	-
LS 250-200-381	MMG-G	4	30	200L	44.45	55	D200	99390299	96789269	96809942	-	-
LS 250-200-381	MMG-G	4	37	225S	44.45	60	D224	99390300	96789269	96809942	-	-

Pump typ	Motor brand	Pole	Power [kW]	Frame size	Shaft diameter [mm]		Coupling type	Grundfos standard coupling, pin bush			Grid coupling	
					Pump	Motor		Kit No	Rubber	Bolts	Coupling complete	Assemble set
LS 250-200-381	MMG-G	4	45	225M	44.45	60	D224	99390300	96789269	96809942	-	-
LS 250-200-381	MMG-G	4	55	250M	44.45	65	D224	99390301	96789269	96809942	-	-
LS 250-200-381	MMG-G	4	75	280S	44.45	75	D250	99390302	96789274	96809943	-	-
LS 250-200-381	MMG-G	4	90	280M	44.45	75	D250	99390302	96789274	96809943	-	-
LS 250-200-381	Siemens	6	11	160L	44.45	42	D180	99390309	96789247	96809941	-	-
LS 250-200-381	Siemens	6	15	180L	44.45	48	D200	99390298	96789269	96809942	-	-
LS 250-200-381	Siemens	6	18.5	200L	44.45	55	D200	99390299	96789269	96809942	-	-
LS 250-200-381	Siemens	6	22	200L	44.45	55	D200	99390299	96789269	96809942	-	-
LS 250-200-381	Siemens	6	30	225M	44.45	60	D224	99390300	96789269	96809942	-	-
LS 250-200-381	Siemens	6	37	250M	44.45	65	D224	99390301	96789269	96809942	-	-
LS 250-200-381	Siemens	6	45	280S	44.45	75	D250	99390302	96789274	96809943	-	-
LS 250-200-381	MMG-G	6	11	160L	44.45	42	D180	99390309	96789247	96809941	-	-
LS 250-200-381	MMG-G	6	15	180L	44.45	48	D200	99390298	96789269	96809942	-	-
LS 250-200-381	MMG-G	6	18.5	200L	44.45	55	D200	99390299	96789269	96809942	-	-
LS 250-200-381	MMG-G	6	22	200L	44.45	55	D200	99390299	96789269	96809942	-	-
LS 250-200-381	MMG-G	6	30	225M	44.45	60	D224	99390300	96789269	96809942	-	-
LS 250-200-381	MMG-G	6	37	250M	44.45	65	D224	99390301	96789269	96809942	-	-
LS 250-200-381	MMG-G	6	45	280S	44.45	75	D250	99390302	96789274	96809943	-	-
LS 250-200-381	MMG-G	6	55	280M	44.45	75	D250	99390302	96789274	96809943	-	-
LS 250-200-381	MMG-G	6	75	315S	44.45	80	D250	99390303	96789274	96809943	-	-
LS 300-200-489	Siemens	4	110	315S	63.5	80	D250	99390310	96789274	96809943	-	-
LS 300-200-489	Siemens	4	132	315M	63.5	80	D250	99390310	96789274	96809943	-	-
LS 300-200-489	Siemens	4	160	315L	63.5	80	D250	99390310	96789274	96809943	-	-
LS 300-200-489	Siemens	4	200	315L	63.5	80	D250	99390310	96789274	96809943	-	-
LS 300-200-489	Siemens	4	250	315L	63.5	85	D250	99390311	96789274	96809943	-	-
LS 300-200-489	Siemens	4	315	315L	63.5	85	GRID 90	-	-	-	99392578	99392618
LS 300-200-489	Siemens	4	355	355M	63.5	95	GRID 90	-	-	-	99392579	99392618
LS 300-200-489	MMG-G	4	110	315S	63.5	80	D250	99390310	96789274	96809943	-	-
LS 300-200-489	MMG-G	4	132	315M	63.5	80	D250	99390310	96789274	96809943	-	-
LS 300-200-489	MMG-G	4	160	315L	63.5	80	D250	99390310	96789274	96809943	-	-
LS 300-200-489	MMG-G	4	200	315L	63.5	80	D250	99390310	96789274	96809943	-	-
LS 300-200-489	MMG-G	4	250	315M	63.5	100	D250	99596708	96789274	96809943	-	-
LS 300-200-489	MMG-G	4	315	355L	63.5	100	GRID 110	-	-	-	99596709	99392619
LS 300-200-489	MMG-G	4	355	355C	63.5	100	GRID 110	-	-	-	99596709	99392619
LS 300-200-489	Siemens	6	110	315L	63.5	80	D250	99390310	96789274	96809943	-	-
LS 300-200-489	Siemens	6	37	250M	63.5	65	D224	99390319	96789269	96809942	-	-
LS 300-200-489	Siemens	6	45	280S	63.5	75	D250	99390320	96789274	96809943	-	-
LS 300-200-489	Siemens	6	55	280M	63.5	75	D250	99390320	96789274	96809943	-	-
LS 300-200-489	Siemens	6	75	315S	63.5	80	D250	99390310	96789274	96809943	-	-
LS 300-200-489	Siemens	6	90	315M	63.5	80	D250	99390310	96789274	96809943	-	-
LS 300-200-489	MMG-G	6	110	315L	63.5	80	D250	99390310	96789274	96809943	-	-
LS 300-200-489	MMG-G	6	132	315L	63.5	80	D250	99390310	96789274	96809943	-	-
LS 300-200-489	MMG-G	6	160	355M	63.5	100	D250	99596708	96789274	96809943	-	-
LS 300-200-489	MMG-G	6	200	355M	63.5	100	GRID 110	-	-	-	99596709	99392619
LS 300-200-489	MMG-G	6	37	250M	63.5	65	D224	99390319	96789269	96809942	-	-
LS 300-200-489	MMG-G	6	45	280S	63.5	75	D250	99390320	96789274	96809943	-	-
LS 300-200-489	MMG-G	6	55	280M	63.5	75	D250	99390320	96789274	96809943	-	-
LS 300-200-489	MMG-G	6	75	315S	63.5	80	D250	99390310	96789274	96809943	-	-
LS 300-200-489	MMG-G	6	90	315M	63.5	80	D250	99390310	96789274	96809943	-	-
LS 300-200-489	MMG-G	6	185	355M	63.5	100	GRID 110	-	-	-	99596709	99392619
LS 300-250-305	Siemens	4	30	200L	44.45	55	D200	99390299	96789269	96809942	-	-
LS 300-250-305	Siemens	4	37	225S	44.45	60	D224	99390300	96789269	96809942	-	-

Pump typ	Motor brand	Pole	Power [kW]	Frame size	Shaft diameter [mm]		Coupling type	Grundfos standard coupling, pin bush			Grid coupling	
					Pump	Motor		Kit No	Rubber	Bolts	Coupling complete	Assemble set
LS 300-250-305	Siemens	4	45	225M	44.45	60	D224	99390300	96789269	96809942	-	-
LS 300-250-305	Siemens	4	55	250M	44.45	65	D224	99390301	96789269	96809942	-	-
LS 300-250-305	Siemens	4	75	280S	44.45	75	D250	99390302	96789274	96809943	-	-
LS 300-250-305	Siemens	4	90	280M	44.45	75	D250	99390302	96789274	96809943	-	-
LS 300-250-305	MMG-G	4	110	315S	44.45	80	D250	99390303	96789274	96809943	-	-
LS 300-250-305	MMG-G	4	132	315M	44.45	80	D250	99390303	96789274	96809943	-	-
LS 300-250-305	MMG-G	4	160	315L	44.45	80	D250	99390303	96789274	96809943	-	-
LS 300-250-305	MMG-G	4	30	200L	44.45	55	D200	99390299	96789269	96809942	-	-
LS 300-250-305	MMG-G	4	37	225S	44.45	60	D224	99390300	96789269	96809942	-	-
LS 300-250-305	MMG-G	4	45	225M	44.45	60	D224	99390300	96789269	96809942	-	-
LS 300-250-305	MMG-G	4	55	250M	44.45	65	D224	99390301	96789269	96809942	-	-
LS 300-250-305	MMG-G	4	75	280S	44.45	75	D250	99390302	96789274	96809943	-	-
LS 300-250-305	MMG-G	4	90	280M	44.45	75	D250	99390302	96789274	96809943	-	-
LS 300-250-305	Siemens	6	11	160L	44.45	42	D180	99390309	96789247	96809941	-	-
LS 300-250-305	Siemens	6	15	180L	44.45	48	D200	99390298	96789269	96809942	-	-
LS 300-250-305	Siemens	6	18.5	200L	44.45	55	D200	99390299	96789269	96809942	-	-
LS 300-250-305	Siemens	6	22	200L	44.45	55	D200	99390299	96789269	96809942	-	-
LS 300-250-305	Siemens	6	30	225M	44.45	60	D224	99390300	96789269	96809942	-	-
LS 300-250-305	MMG-G	6	11	160L	44.45	42	D180	99390309	96789247	96809941	-	-
LS 300-250-305	MMG-G	6	15	180L	44.45	48	D200	99390298	96789269	96809942	-	-
LS 300-250-305	MMG-G	6	18.5	200L	44.45	55	D200	99390299	96789269	96809942	-	-
LS 300-250-305	MMG-G	6	22	200L	44.45	55	D200	99390299	96789269	96809942	-	-
LS 300-250-305	MMG-G	6	30	225M	44.45	60	D224	99390300	96789269	96809942	-	-
LS 300-250-305	MMG-G	6	37	250M	44.45	65	D224	99390301	96789269	96809942	-	-
LS 300-250-305	MMG-G	6	45	280S	44.45	75	D250	99390302	96789274	96809943	-	-
LS 300-250-381	Siemens	4	110	315S	57.15	80	D250	99390314	96789274	96809943	-	-
LS 300-250-381	Siemens	4	132	315M	57.15	80	D250	99390314	96789274	96809943	-	-
LS 300-250-381	Siemens	4	160	315L	57.15	80	D250	99390314	96789274	96809943	-	-
LS 300-250-381	Siemens	4	200	315L	57.15	80	D250	99390314	96789274	96809943	-	-
LS 300-250-381	Siemens	4	55	250M	57.15	65	D224	99390312	96789269	96809942	-	-
LS 300-250-381	Siemens	4	75	280S	57.15	75	D250	99390313	96789274	96809943	-	-
LS 300-250-381	Siemens	4	90	280M	57.15	75	D250	99390313	96789274	96809943	-	-
LS 300-250-381	MMG-G	4	110	315S	57.15	80	D250	99390314	96789274	96809943	-	-
LS 300-250-381	MMG-G	4	132	315M	57.15	80	D250	99390314	96789274	96809943	-	-
LS 300-250-381	MMG-G	4	160	315L	57.15	80	D250	99390314	96789274	96809943	-	-
LS 300-250-381	MMG-G	4	200	315L	57.15	80	D250	99390314	96789274	96809943	-	-
LS 300-250-381	MMG-G	4	250	315M	57.15	100	D250	99596710	96789274	96809943	-	-
LS 300-250-381	MMG-G	4	315	355L	57.15	100	GRID 110	-	-	-	99596711	99392619
LS 300-250-381	MMG-G	4	55	250M	57.15	65	D224	99390312	96789269	96809942	-	-
LS 300-250-381	MMG-G	4	75	280S	57.15	75	D250	99390313	96789274	96809943	-	-
LS 300-250-381	MMG-G	4	90	280M	57.15	75	D250	99390313	96789274	96809943	-	-
LS 300-250-381	Siemens	6	18.5	200L	57.15	55	D200	99390321	96789269	96809942	-	-
LS 300-250-381	Siemens	6	22	200L	57.15	55	D200	99390321	96789269	96809942	-	-
LS 300-250-381	Siemens	6	30	225M	57.15	60	D224	99390322	96789269	96809942	-	-
LS 300-250-381	Siemens	6	37	250M	57.15	65	D224	99390312	96789269	96809942	-	-
LS 300-250-381	Siemens	6	45	280S	57.15	75	D250	99390313	96789274	96809943	-	-
LS 300-250-381	Siemens	6	55	280M	57.15	75	D250	99390313	96789274	96809943	-	-
LS 300-250-381	MMG-G	6	18.5	200L	57.15	55	D200	99390321	96789269	96809942	-	-
LS 300-250-381	MMG-G	6	22	200L	57.15	55	D200	99390321	96789269	96809942	-	-
LS 300-250-381	MMG-G	6	30	225M	57.15	60	D224	99390322	96789269	96809942	-	-
LS 300-250-381	MMG-G	6	37	250M	57.15	65	D224	99390312	96789269	96809942	-	-
LS 300-250-381	MMG-G	6	45	280S	57.15	75	D250	99390313	96789274	96809943	-	-

Pump typ	Motor brand	Pole	Power [kW]	Frame size	Shaft diameter [mm]		Coupling type	Grundfos standard coupling, pin bush			Grid coupling	
					Pump	Motor		Kit No	Rubber	Bolts	Coupling complete	Assemble set
LS 300-250-381	MMG-G	6	55	280M	57.15	75	D250	*99390313*	*96789274*	*96809943*	-	-
LS 300-250-381	MMG-G	6	75	315S	57.15	80	D250	*99390314*	*96789274*	*96809943*	-	-
LS 300-250-381	MMG-G	6	90	315M	57.15	80	D250	*99390314*	*96789274*	*96809943*	-	-
LS 300-250-381	MMG-G	6	110	315L	57.15	80	D250	*99390314*	*96789274*	*96809943*	-	-
LS 350-250-498	Siemens	4	160	315L	79.38	80	D250	*99390315*	*96789274*	*96809943*	-	-
LS 350-250-498	Siemens	4	200	315L	79.38	80	D250	*99390315*	*96789274*	*96809943*	-	-
LS 350-250-498	Siemens	4	250	315L	79.38	85	D250	*99390316*	*96789274*	*96809943*	-	-
LS 350-250-498	Siemens	4	315	315L	79.38	85	GRID 90	-	-	-	*99392591*	*99392618*
LS 350-250-498	Siemens	4	355	355M	79.38	95	GRID 90	-	-	-	*99392584*	*99392618*
LS 350-250-498	Siemens	4	400	355M	79.38	95	GRID 90	-	-	-	*99392584*	*99392618*
LS 350-250-498	Siemens	4	500	355M	79.38	95	GRID 90	-	-	-	*99392584*	*99392618*
LS 350-250-498	MMG-G	4	160	315L	79.38	80	D250	*99390315*	*96789274*	*96809943*	-	-
LS 350-250-498	MMG-G	4	200	315L	79.38	80	D250	*99390315*	*96789274*	*96809943*	-	-
LS 350-250-498	MMG-G	4	250	315M	79.38	100	D250	*99596712*	*96789274*	*96809943*	-	-
LS 350-250-498	MMG-G	4	315	355L	79.38	100	GRID 110	-	-	-	*99596713*	*99392619*
LS 350-250-498	MMG-G	4	355	355C	79.38	100	GRID 110	-	-	-	*99596713*	*99392619*
LS 350-250-498	MMG-G	4	400	315DB	79.38	95	GRID 90	-	-	-	*99392584*	*99392618*
LS 350-250-498	MMG-G	4	450	355CB	79.38	95	GRID 90	-	-	-	*99392584*	*99392618*
LS 350-250-498	MMG-G	4	500	355CB	79.38	95	GRID 90	-	-	-	*99392584*	*99392618*
LS 350-250-498	MMG-G	4	425	355CB	79.38	95	GRID 90	-	-	-	*99392584*	*99392618*
LS 350-250-498	MMG-G	4	475	355CB	79.38	95	GRID 90	-	-	-	*99392584*	*99392618*
LS 350-250-498	Siemens	6	110	315L	79.38	80	D250	*99390315*	*96789274*	*96809943*	-	-
LS 350-250-498	Siemens	6	132	315L	79.38	80	D250	*99390315*	*96789274*	*96809943*	-	-
LS 350-250-498	Siemens	6	200	315L	79.38	85	GRID 90	-	-	-	*99392591*	*99392618*
LS 350-250-498	Siemens	6	45	280S	79.38	75	D250	*99390323*	*96789274*	*96809943*	-	-
LS 350-250-498	Siemens	6	55	280M	79.38	75	D250	*99390323*	*96789274*	*96809943*	-	-
LS 350-250-498	Siemens	6	75	315S	79.38	80	D250	*99390315*	*96789274*	*96809943*	-	-
LS 350-250-498	Siemens	6	90	315M	79.38	80	D250	*99390315*	*96789274*	*96809943*	-	-
LS 350-250-498	MMG-G	6	110	315L	79.38	80	D250	*99390315*	*96789274*	*96809943*	-	-
LS 350-250-498	MMG-G	6	132	315L	79.38	80	D250	*99390315*	*96789274*	*96809943*	-	-
LS 350-250-498	MMG-G	6	160	355M	79.38	100	D250	*99596712*	*96789274*	*96809943*	-	-
LS 350-250-498	MMG-G	6	200	355M	79.38	100	GRID 110	-	-	-	*99596713*	*99392619*
LS 350-250-498	MMG-G	6	220	355M	79.38	100	GRID 110	-	-	-	*99596713*	*99392619*
LS 350-250-498	MMG-G	6	250	355L	79.38	100	GRID 110	-	-	-	*99596713*	*99392619*
LS 350-250-498	MMG-G	6	45	280S	79.38	75	D250	*99390323*	*96789274*	*96809943*	-	-
LS 350-250-498	MMG-G	6	55	280M	79.38	75	D250	*99390323*	*96789274*	*96809943*	-	-
LS 350-250-498	MMG-G	6	75	315S	79.38	80	D250	*99390315*	*96789274*	*96809943*	-	-
LS 350-250-498	MMG-G	6	90	315M	79.38	80	D250	*99390315*	*96789274*	*96809943*	-	-
LS 350-250-498	MMG-G	6	185	355M	79.38	100	GRID 110	-	-	-	*99596713*	*99392619*
LS 350-250-630	Siemens	4	250	315L	79.38	85	D250	*99390316*	*96789274*	*96809943*	-	-
LS 350-250-630	Siemens	4	315	315L	79.38	85	GRID 90	-	-	-	*99392591*	*99392618*
LS 350-250-630	Siemens	4	355	355M	79.38	95	GRID 90	-	-	-	*99392584*	*99392618*
LS 350-250-630	Siemens	4	400	355M	79.38	95	GRID 90	-	-	-	*99392584*	*99392618*
LS 350-250-630	Siemens	4	500	355M	79.38	95	GRID 90	-	-	-	*99392584*	*99392618*
LS 350-250-630	Siemens	4	560	400	79.38	110	GRID 110	-	-	-	*99392585*	*99392619*
LS 350-250-630	Siemens	4	630	400	79.38	110	GRID 110	-	-	-	*99392585*	*99392619*
LS 350-250-630	MMG-G	4	250	315M	79.38	100	D250	*99596712*	*96789274*	*96809943*	-	-
LS 350-250-630	MMG-G	4	315	355L	79.38	100	GRID 110	-	-	-	*99596713*	*99392619*
LS 350-250-630	MMG-G	4	355	355C	79.38	100	GRID 110	-	-	-	*99596713*	*99392619*
LS 350-250-630	MMG-G	4	400	315DB	79.38	95	GRID 90	-	-	-	*99392584*	*99392618*
LS 350-250-630	MMG-G	4	450	355CB	79.38	95	GRID 90	-	-	-	*99392584*	*99392618*
LS 350-250-630	MMG-G	4	500	355CB	79.38	95	GRID 90	-	-	-	*99392584*	*99392618*

Pump typ	Motor brand	Pole	Power [kW]	Frame size	Shaft diameter [mm]		Coupling type	Grundfos standard coupling, pin bush			Grid coupling	
					Pump	Motor		Kit No	Rubber	Bolts	Coupling complete	Assemble set
LS 350-250-630	MMG-G	4	560	400CB	79.38	110	GRID 110	-	-	-	*99392585*	*99392619*
LS 350-250-630	MMG-G	4	600	400CB	79.38	110	GRID 110	-	-	-	*99392585*	*99392619*
LS 350-250-630	MMG-G	4	530	355CB	79.38	95	GRID 90	-	-	-	*99392584*	*99392618*
LS 350-250-630	MMG-G	4	425	355CB	79.38	95	GRID 90	-	-	-	*99392584*	*99392618*
LS 350-250-630	MMG-G	4	475	355CB	79.38	95	GRID 90	-	-	-	*99392584*	*99392618*
LS 350-250-630	Siemens	6	110	315L	79.38	80	D250	*99390315*	*96789274*	*96809943*	-	-
LS 350-250-630	Siemens	6	132	315L	79.38	80	D250	*99390315*	*96789274*	*96809943*	-	-
LS 350-250-630	Siemens	6	160	315L	79.38	80	D250	*99390315*	*96789274*	*96809943*	-	-
LS 350-250-630	Siemens	6	200	315L	79.38	85	GRID 90	-	-	-	*99392591*	*99392618*
LS 350-250-630	Siemens	6	250	315L	79.38	85	GRID 90	-	-	-	*99392591*	*99392618*
LS 350-250-630	Siemens	6	315	355M	79.38	95	GRID 90	-	-	-	*99392584*	*99392618*
LS 350-250-630	Siemens	6	75	315S	79.38	80	D250	*99390315*	*96789274*	*96809943*	-	-
LS 350-250-630	Siemens	6	90	315M	79.38	80	D250	*99390315*	*96789274*	*96809943*	-	-
LS 350-250-630	MMG-G	6	110	315L	79.38	80	D250	*99390315*	*96789274*	*96809943*	-	-
LS 350-250-630	MMG-G	6	132	315L	79.38	80	D250	*99390315*	*96789274*	*96809943*	-	-
LS 350-250-630	MMG-G	6	160	355M	79.38	100	D250	*99596712*	*96789274*	*96809943*	-	-
LS 350-250-630	MMG-G	6	200	355M	79.38	100	GRID 110	-	-	-	*99596713*	*99392619*
LS 350-250-630	MMG-G	6	220	355M	79.38	100	GRID 110	-	-	-	*99596713*	*99392619*
LS 350-250-630	MMG-G	6	250	355L	79.38	100	GRID 110	-	-	-	*99596713*	*99392619*
LS 350-250-630	MMG-G	6	300	355C	79.38	100	GRID 110	-	-	-	*99596713*	*99392619*
LS 350-250-630	MMG-G	6	75	315S	79.38	80	D250	*99390315*	*96789274*	*96809943*	-	-
LS 350-250-630	MMG-G	6	90	315M	79.38	80	D250	*99390315*	*96789274*	*96809943*	-	-
LS 350-250-630	MMG-G	6	185	355M	79.38	100	GRID 110	-	-	-	*99596713*	*99392619*
LS 350-300-508	Siemens	6	110	315L	63.5	80	D250	*99390310*	*96789274*	*96809943*	-	-
LS 350-300-508	Siemens	6	132	315L	63.5	80	D250	*99390310*	*96789274*	*96809943*	-	-
LS 350-300-508	Siemens	6	160	315L	63.5	80	D250	*99390310*	*96789274*	*96809943*	-	-
LS 350-300-508	Siemens	6	200	315L	63.5	80	GRID 80	-	-	-	*99392587*	*99392617*
LS 350-300-508	Siemens	6	55	280M	63.5	75	D250	*99390320*	*96789274*	*96809943*	-	-
LS 350-300-508	Siemens	6	75	315S	63.5	80	D250	*99390310*	*96789274*	*96809943*	-	-
LS 350-300-508	Siemens	6	90	315M	63.5	80	D250	*99390310*	*96789274*	*96809943*	-	-
LS 350-300-508	MMG-G	6	110	315L	63.5	80	D250	*99390310*	*96789274*	*96809943*	-	-
LS 350-300-508	MMG-G	6	132	315L	63.5	80	D250	*99390310*	*96789274*	*96809943*	-	-
LS 350-300-508	MMG-G	6	160	355M	63.5	100	D250	*99596708*	*96789274*	*96809943*	-	-
LS 350-300-508	MMG-G	6	200	355M	63.5	100	GRID 110	-	-	-	*99596709*	*99392619*
LS 350-300-508	MMG-G	6	220	355M	63.5	100	GRID 110	-	-	-	*99596709*	*99392619*
LS 350-300-508	MMG-G	6	250	355L	63.5	100	GRID 110	-	-	-	*99596709*	*99392619*
LS 350-300-508	MMG-G	6	300	355C	63.5	100	GRID 110	-	-	-	*99596709*	*99392619*
LS 350-300-508	MMG-G	6	55	280M	63.5	75	D250	*99390320*	*96789274*	*96809943*	-	-
LS 350-300-508	MMG-G	6	75	315S	63.5	80	D250	*99390310*	*96789274*	*96809943*	-	-
LS 350-300-508	MMG-G	6	90	315M	63.5	80	D250	*99390310*	*96789274*	*96809943*	-	-
LS 350-300-508	MMG-G	6	185	355M	63.5	100	GRID 110	-	-	-	*99596709*	*99392619*
LS 400-350-397	Siemens	4	110	315S	63.5	80	D250	*99390310*	*96789274*	*96809943*	-	-
LS 400-350-397	Siemens	4	132	315M	63.5	80	D250	*99390310*	*96789274*	*96809943*	-	-
LS 400-350-397	Siemens	4	160	315L	63.5	80	D250	*99390310*	*96789274*	*96809943*	-	-
LS 400-350-397	Siemens	4	200	315L	63.5	80	D250	*99390310*	*96789274*	*96809943*	-	-
LS 400-350-397	Siemens	4	250	315L	63.5	85	D250	*99390311*	*96789274*	*96809943*	-	-
LS 400-350-397	MMG-G	4	110	315S	63.5	80	D250	*99390310*	*96789274*	*96809943*	-	-
LS 400-350-397	MMG-G	4	132	315M	63.5	80	D250	*99390310*	*96789274*	*96809943*	-	-
LS 400-350-397	MMG-G	4	160	315L	63.5	80	D250	*99390310*	*96789274*	*96809943*	-	-
LS 400-350-397	MMG-G	4	200	315L	63.5	80	D250	*99390310*	*96789274*	*96809943*	-	-
LS 400-350-397	MMG-G	4	250	315M	63.5	100	D250	*99596708*	*96789274*	*96809943*	-	-
LS 400-350-397	MMG-G	4	315	355L	63.5	100	GRID 110	-	-	-	*99596709*	*99392619*

Pump typ	Motor brand	Pole	Power [kW]	Frame size	Shaft diameter [mm]		Coupling type	Grundfos standard coupling, pin bush			Grid coupling	
					Pump	Motor		Kit No	Rubber	Bolts	Coupling complete	Assemble set
LS 400-350-397	MMG-G	4	355	355C	63.5	100	GRID 110	-	-	-	*99596709*	*99392619*
LS 400-350-397	Siemens	6	37	250M	63.5	65	D224	*99390319*	*96789269*	*96809942*	-	-
LS 400-350-397	Siemens	6	45	280S	63.5	75	D250	*99390320*	*96789274*	*96809943*	-	-
LS 400-350-397	Siemens	6	55	280M	63.5	75	D250	*99390320*	*96789274*	*96809943*	-	-
LS 400-350-397	Siemens	6	75	315S	63.5	80	D250	*99390310*	*96789274*	*96809943*	-	-
LS 400-350-397	MMG-G	6	55	280M	63.5	75	D250	*99390320*	*96789274*	*96809943*	-	-
LS 400-350-397	MMG-G	6	110	315L	63.5	80	D250	*99390310*	*96789274*	*96809943*	-	-
LS 400-350-397	MMG-G	6	37	250M	63.5	65	D224	*99390319*	*96789269*	*96809942*	-	-
LS 400-350-397	MMG-G	6	45	280S	63.5	75	D250	*99390320*	*96789274*	*96809943*	-	-
LS 400-350-397	MMG-G	6	75	315S	63.5	80	D250	*99390310*	*96789274*	*96809943*	-	-
LS 400-350-397	MMG-G	6	90	315M	63.5	80	D250	*99390310*	*96789274*	*96809943*	-	-

LS 65-50-241, LS 65-50-330, LS 100-80-241

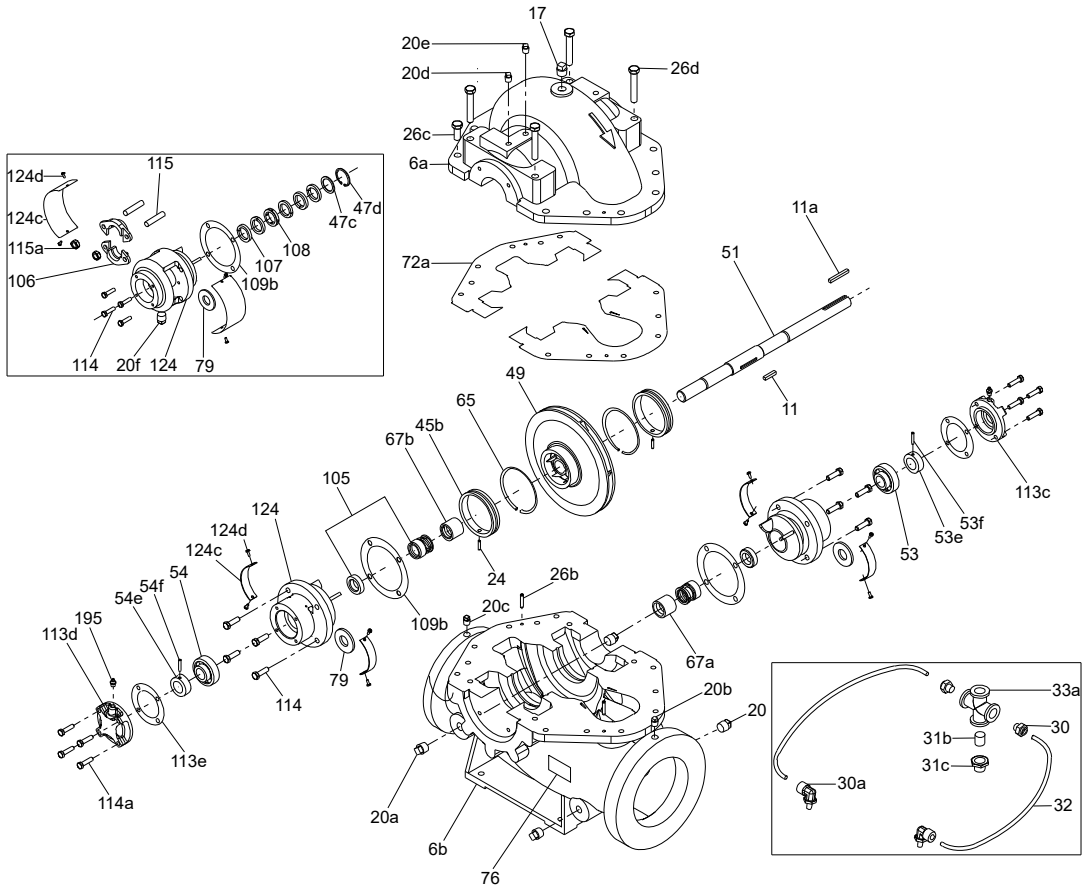

LS 125-100-381, LS 125-100-388

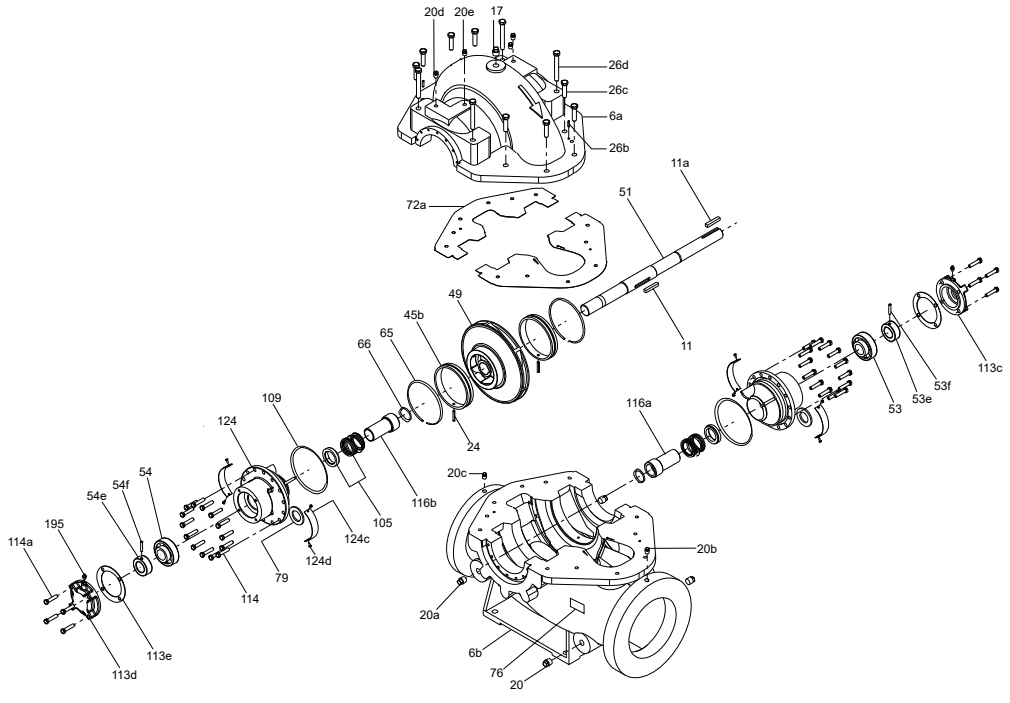

LS 150-125-305, LS 150-125-381, LS 200-150-305C

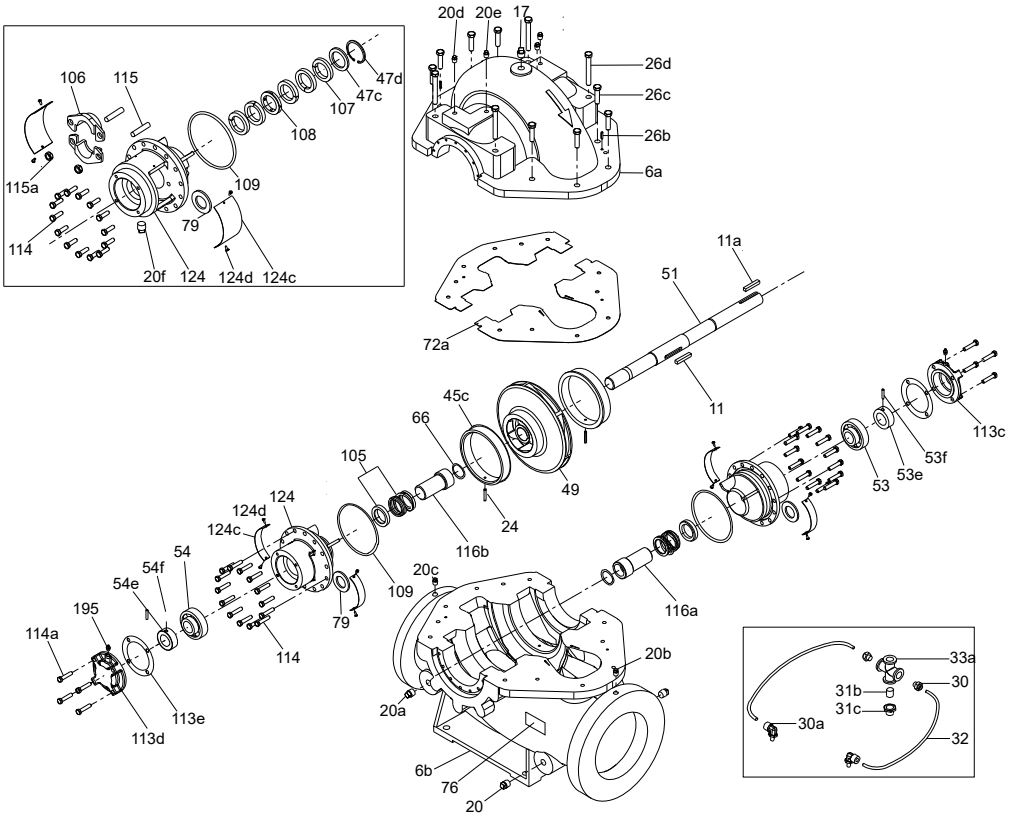

TM039950

LS 125-100-279, LS 125-100-305, LS 100-80-356, LS 100-80-356B, LS 200-150-305A

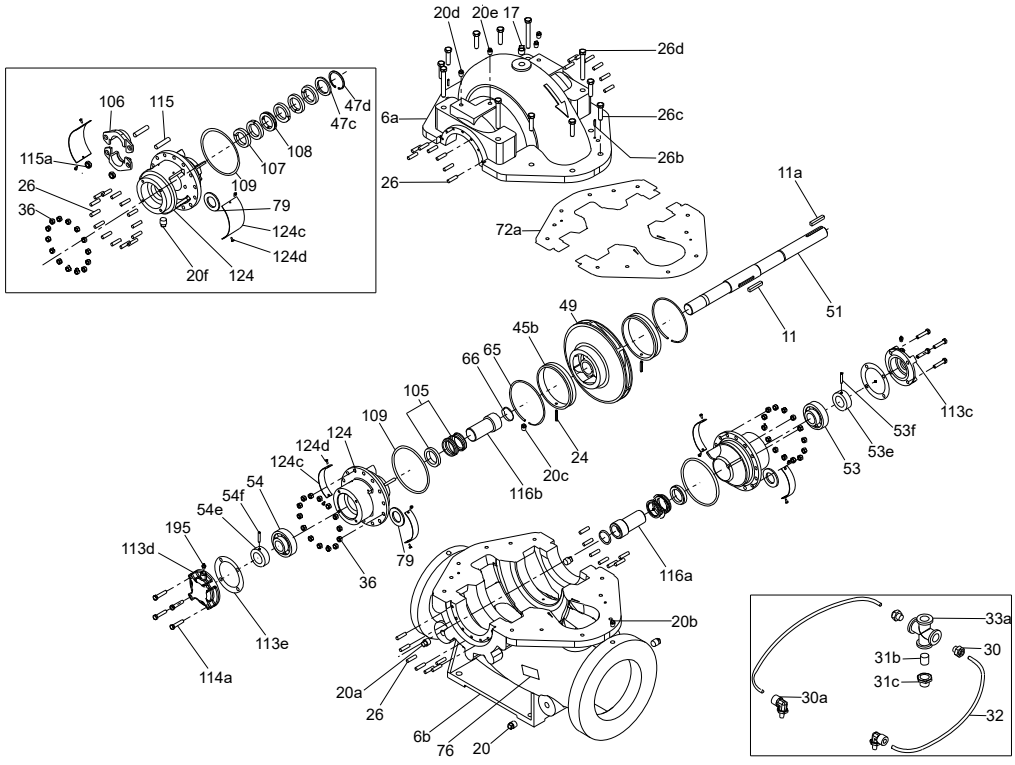

TM039943

LS 200-150-483 XE

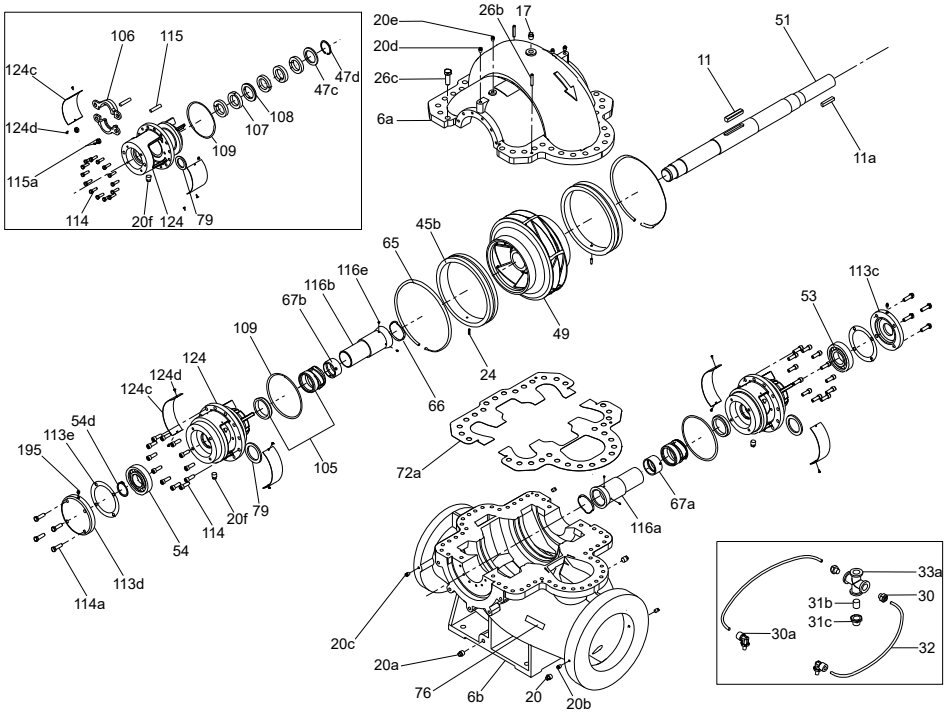

TM039947

LS 100-80-241

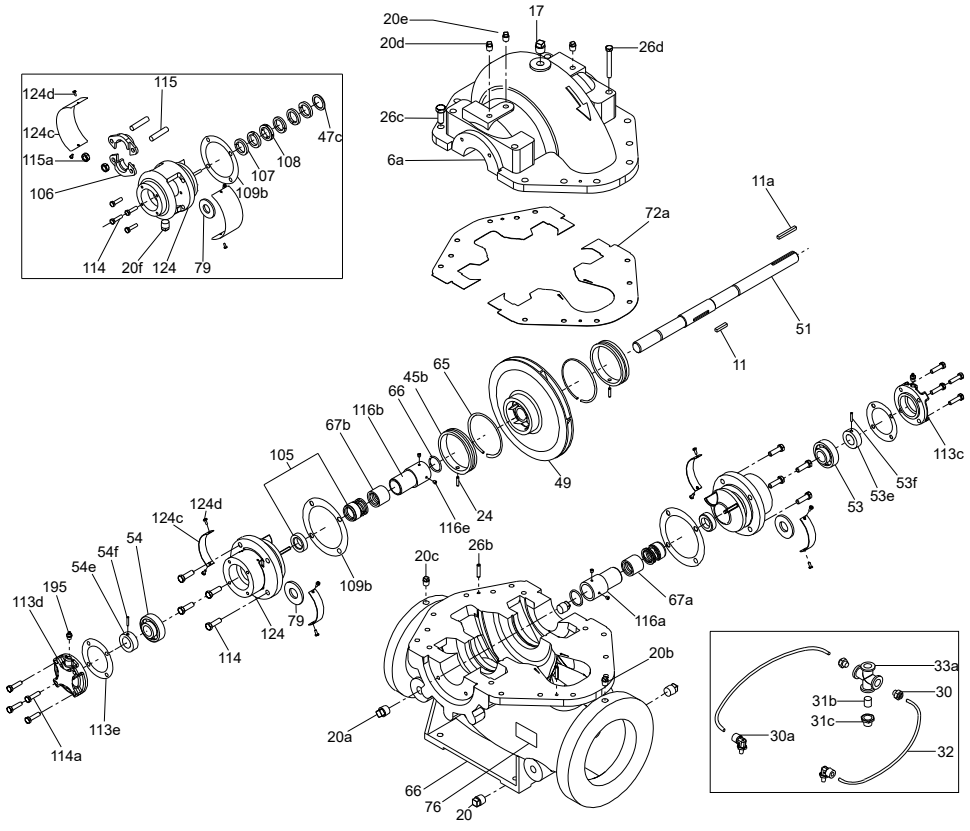

TM039951

LS 200-150-381, LS 200-150-381B, LS 250-200-305, LS 250-200-381, LS 300-250-305

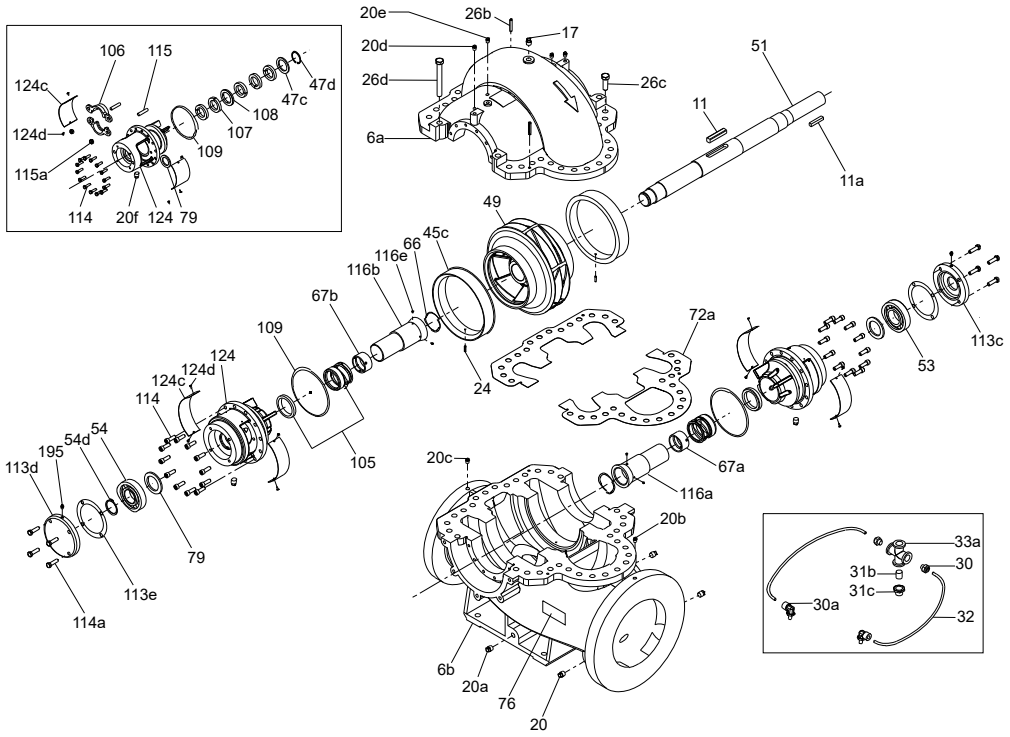

TM039949

LS 300-250-381

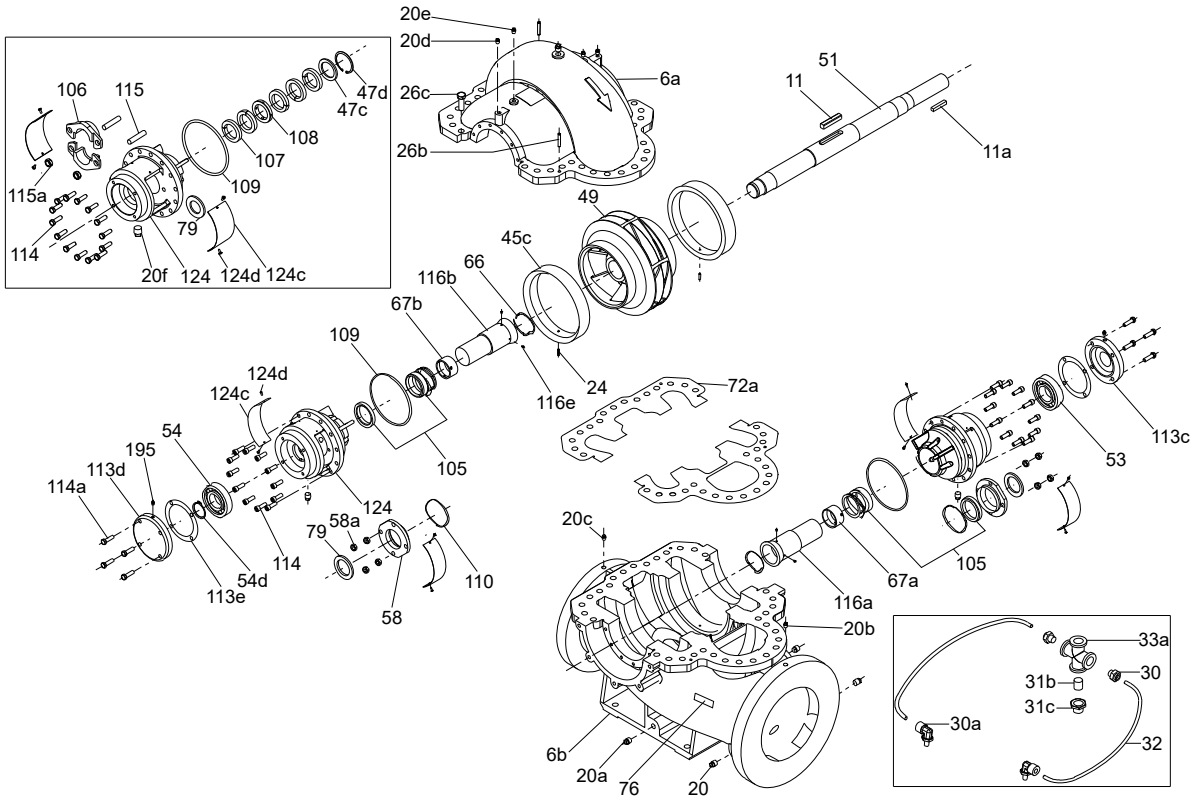

TM039941

LS 400-350-397

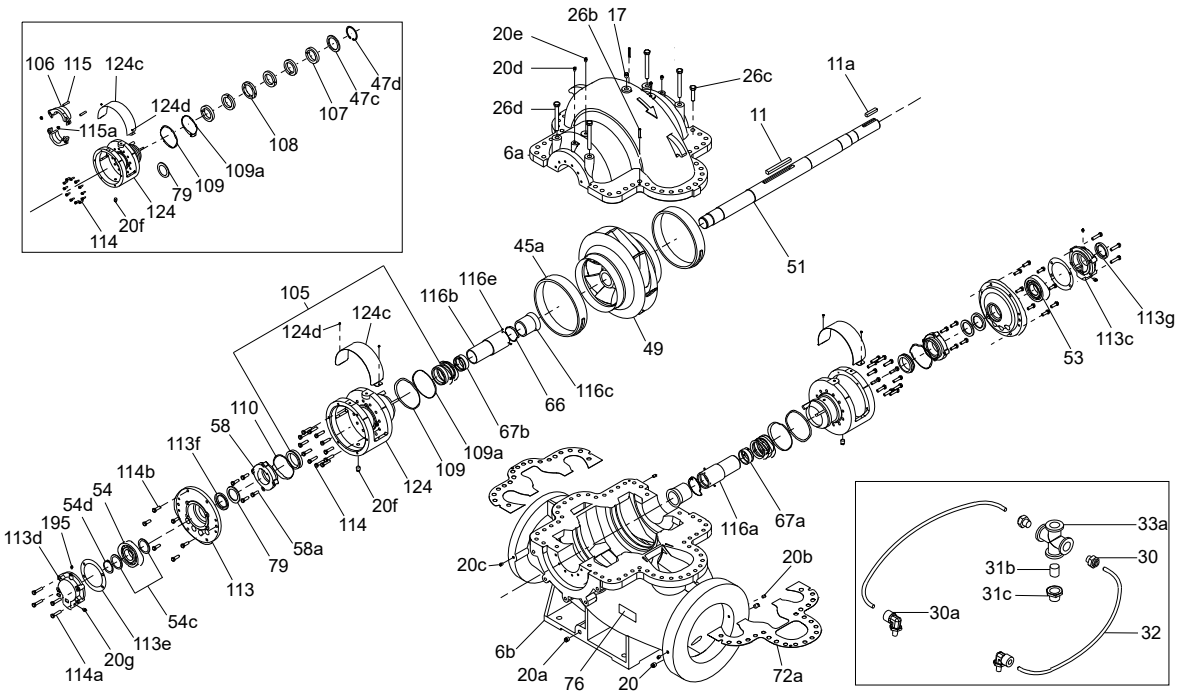

TM039792

LS 350-250-498, LS 350-250-630

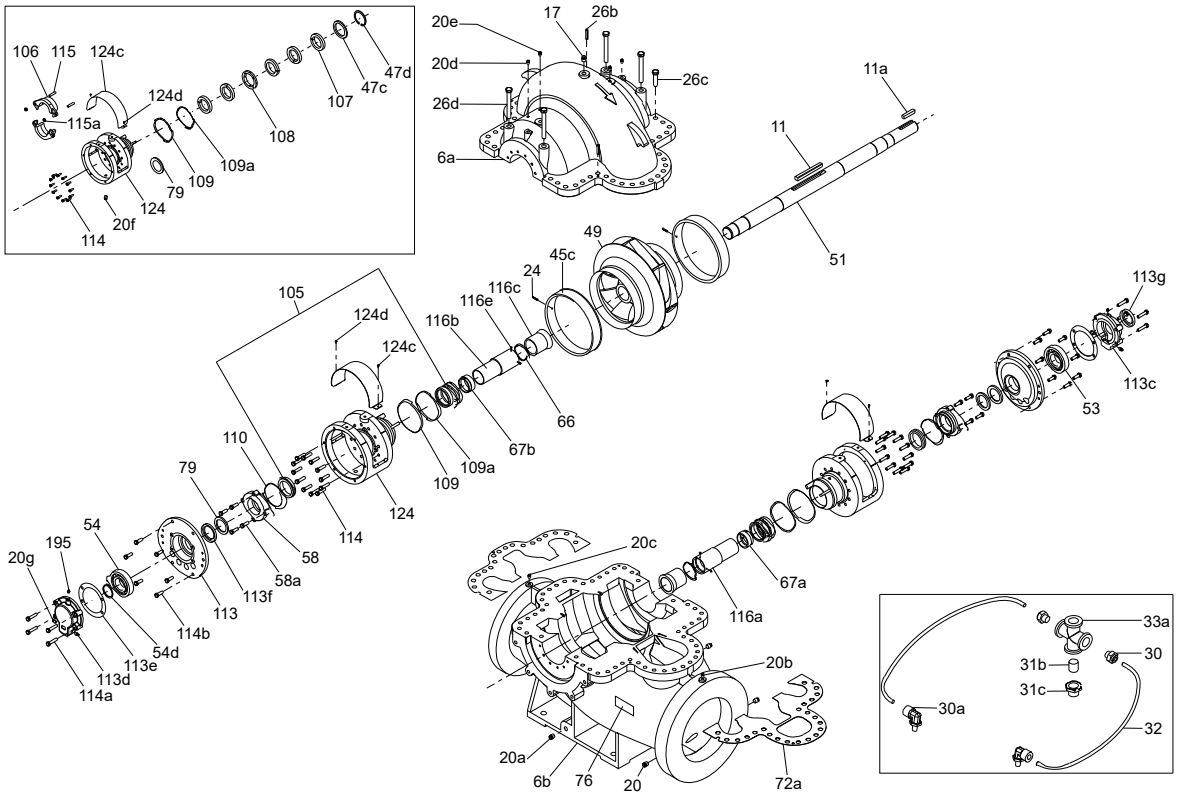

TM039944

LS 200-150-508

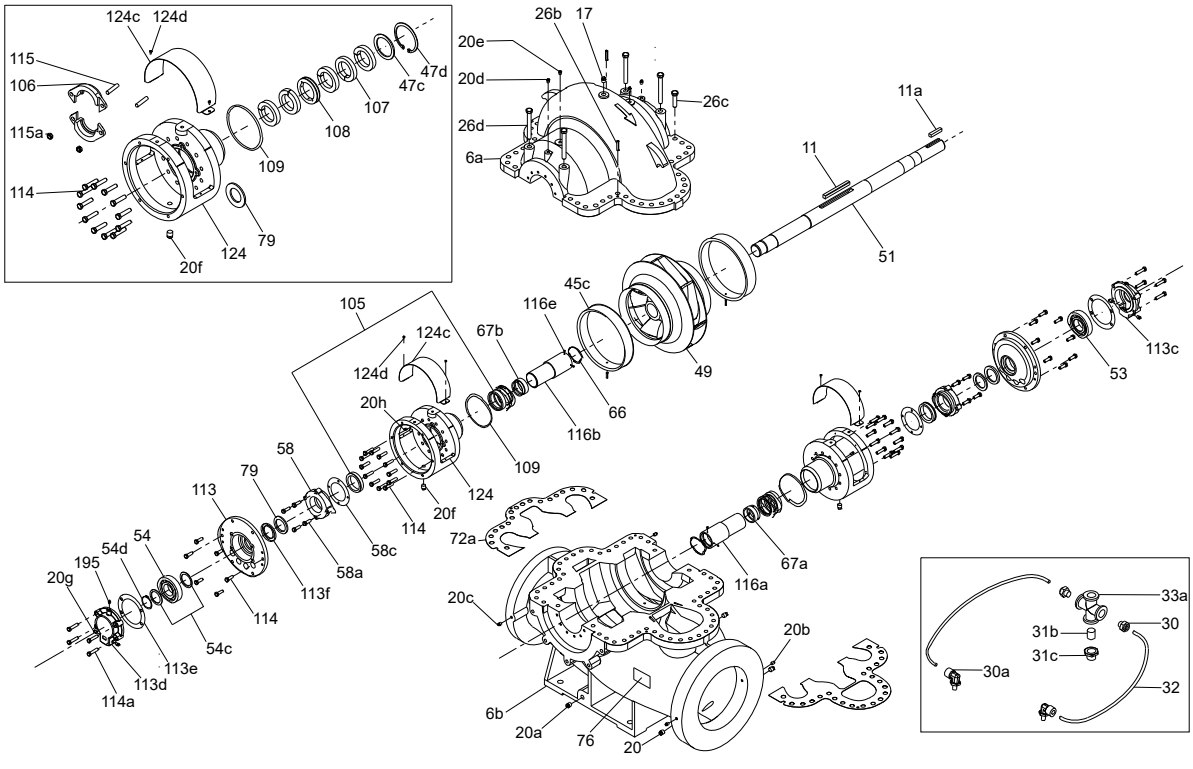

TM039945

LS 200-150-483

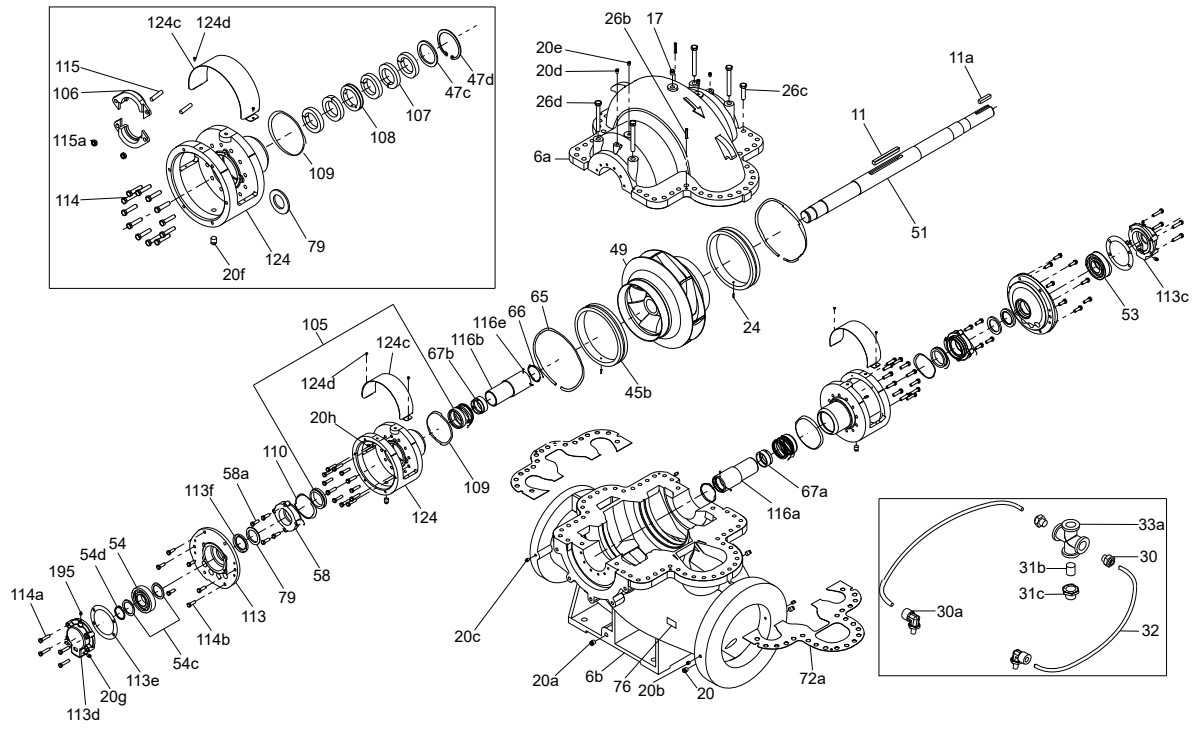

TM039946

LS 300-200-489, LS 350-300-508

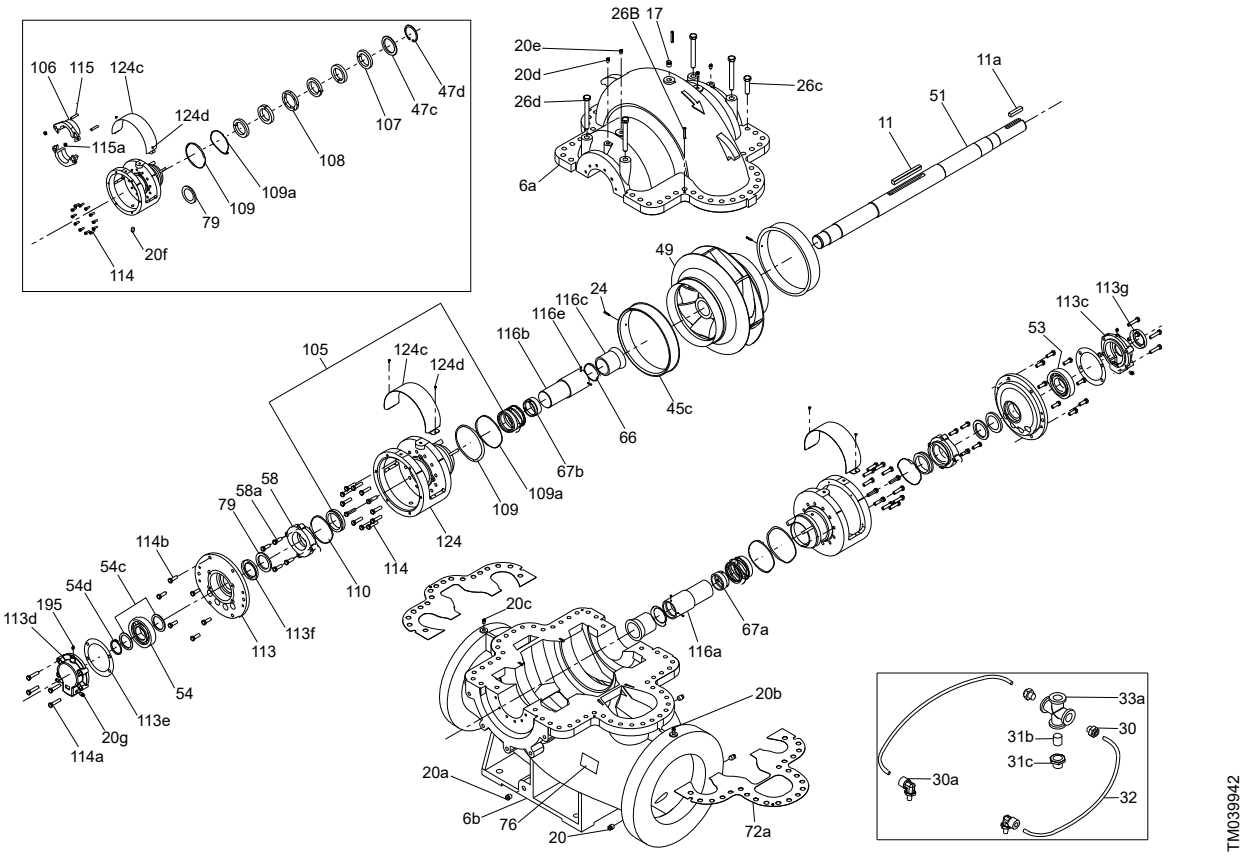

LS, without sleeve

Example, pump without sleeve

LS 125 -100 -305X /273.1 , (W) 1 F2 D S BBQE 1

Material code: D, E, J, L

50/60 Hz

Bearing

Pos.	Description	LS65 LS100-80-241	LS100-80-356 LS125	LS150 LS200-150-305	LS200-150-381 LS200-150-483 LS250 LS300-250-305	LS300-250-381
	Kit No	*99291587*	*99291986*	*99294128*	*99294133*	*99294136*
53	Bearing	1	1	1	1	1
54	Bearing	1	1	1	1	1
54e	Round nut	1	1	1	1	1
54c	Lock washer	1	1	1	1	1
54d	Tab washer	1	1	1	-	1
109	O-ring	-	2	2	2	2
109a	O-ring	-	-	-	-	-
109b	Gasket	2	-	-	-	-
110	O-ring					
113e	Gasket	2	2	2	2	2
113f	Lip seal	2	2	2	2	2
113g	Lip seal	1	1	1	1	1

Pos.	Description	LS200-150-483 X6	LS200-150-508	LS300-200-489 LS350-300-508	LS350-250-498 LS350-250-630	LS450-350-397
	Kit No	*99294137*	*99294138*	*99294139*	*99294154*	*99294140*
53	Bearing	1	1	1	1	1
54	Bearing	1	1	1	1	1
54e	Round nut	1	1	1	1	1
54c	Lock washer	1	1	1	1	1
54d	Tab washer	1	1	1	1	1
109	O-ring	2	2	2	2	2
109a	O-ring	2	-	2	-	-
109b	Gasket	-	2	-	2	2
110	O-ring			2	2	2
113e	Gasket	2	2	2	2	2
113f	Lip seal	2	2	2	2	2
113g	Lip seal	1	1	1	1	1

Gasket

Pos.	Description	LS65-50-241 LS65-50-330 LS100-80-241	LS100-80-356 LS125	LS150-125-305	LS150-125-381	LS200-150-305	LS200-150-381
	Kit No	*99344669*	*99344670*	*99344671*	*99344672*	*99344673*	*99344674*
72a	Gasket	1	1	1	1	1	1
79	Slinger	2	2	2	2	2	2
109	O-ring	-	2	2	2	2	2
109a	O-ring	-	-	-	-	-	-
109b	Gasket	2	-	-	-	-	-
110	O-ring	-	-	-	-	-	-
113e	Gasket	2	2	2	2	2	2
113f	Lip seal	2	2	2	2	2	2
113g	Lip seal	1	1	1	1	1	1

Pos.	Description	LS200-150-483	LS200-150-483 X6	LS200-150-508	LS250-200-305	LS250-200-381	LS300-200-489
	Kit No	*99344675*	*99344676*	*99344677*	*99344678*	*99344679*	*99344680*
72a	Gasket	1	1	1	1	1	1
79	Slinger	2	2	2	2	2	2
109	O-ring	2	2	2	2	2	2
109a	O-ring	-	2	-	-	-	2
109b	Gasket	-	-	2	-	-	-
110	O-ring	-	-	-	-	-	2
113e	Gasket	2	2	2	2	2	2
113f	Lip seal	2	2	2	2	2	2
113g	Lip seal	1	1	1	1	1	1

Pos.	Description	LS300-250-305	LS300-250-381	LS350-250-498	LS350-300-508	LS350-250-630	LS450-350-397
	Kit No	*99344681*	*99344682*	*99344683*	*99344684*	*99344685*	*99344686*
72a	Gasket	1	1	1	1	1	1
79	Slinger	2	2	2	2	2	2
109	O-ring	2	2	2	2	2	2
109a	O-ring	-	2	2	2	2	2
109b	Gasket	-	-	-	-	-	-
110	O-ring	-	-	2	2	2	2
113e	Gasket	2	2	2	2	2	2
113f	Lip seal	2	2	2	2	2	2
113g	Lip seal	1	1	1	1	1	1

Hardware

Pos.	Description	LS 65-50-241 LS 65-50-330 LS 100-80-241	LS 100-80-356	LS 125-100-279 LS 125-100-305	LS 125-100-381 LS 125-100-388	LS 150-125-305 LS 200-150-305C
	Kit No	*96827660*	*96827622*	*96827624*	*96827626*	*96827629*
26	Stud		28	28	28	
26b	Roll pin	2	2	2	2	2
26c	Cap screw	12	12	10	12	54
26d	Cap screw	8	4	4	4	4
36	Nut	-	28	28	28	-
114a	Cap screw	8	8	8	8	8

Pos.	Description	LS 150-125-381 LS 200-150-305A	LS 200-150-381 LS 250-200-305 LS 250-200-381 LS 300-250-305	LS 200-150-483	LS 200-150-508	LS 300-200-489 LS 350-300-508
	Kit No	*96827632*	*96827636*	*96827640*	*96827644*	*96827649*
26b	Roll pin	2	2	2	2	2
26c	Cap screw	50	56	60	26	60
26d	Cap screw	4	4	4	4	4
58a	Cap screw	-	-	8	4	8
114	Screw	-	-	-	-	24
114a	Cap screw	8	4	8	8	8
114b	Cap screw	-	4	16	12	12

Pos.	Description	LS 300-250-381	LS 350-250-498	LS 350-250-630	LS 450-350-397
	Kit No	***96827651***	***96840082***	***96840083***	***99345985***
26b	Roll pin	2	2	2	2
26c	Cap screw	34	36	32	44
26d	Cap screw	-	4	4	2
58a	Cap screw	8	8	8	2
114	Cap screw	24	28	28	32
114a	Cap screw	8	8	12	20

Impeller

The kit consists of impeller (pos. 49), key (pos. 11 and 11a), round nut (pos. 67b) and tap wash (pos. 67a).

Description	Kit No			
	Silicon bronze (B21)	**Nickel-aluminium-bronze (B22)**	**AISI-304 (H304)**	**AISI-316 (H316)**
LS65-50-241	*99292014*	*99344622*	*99292051*	*99344645*
LS65-50-330	*99292015*	*99344623*	*99292052*	*99344646*
LS100-80-241	*99292017*	*99344624*	*99292053*	*99344647*
LS100-80-356	*99292018*	*99344625*	*99292054*	*99344648*
LS125-100-279	*99292019*	*99344626*	*99292055*	*99344649*
LS125-100-305	*99292020*	*99344627*	*99292064*	*99344650*
LS125-100-381	-	-	*99292066*	*99344651*
LS125-100-388	*99292021*	*99344628*	99894133	-
LS150-125-305	*99292022*	*99344629*	*99292071*	*99344652*
LS150-125-381	*99292033*	*99344630*	*99292076*	*99344653*
LS200-150-305C	*99292034*	*99344631*	*99292080*	*99344654*
LS200-150-381	*99292035*	*99344632*	*99292082*	*99344655*
LS200-150-483	*99292037*	*99344633*	*99292095*	*99344656*
LS250-200-305	*99292042*	*99344636*	*99292102*	*99344659*
LS250-200-381	*99292043*	*99344637*	*99292104*	*99344660*
LS300-250-305	*99292046*	*99344639*	*99292107*	*99344662*
LS300-250-381	*99292047*	*99344640*	*99292109*	*99344664*
LS200-150-483 X6	*99292039*	*99344634*	*99292098*	*99344657*
LS200-150-508	*99292041*	*99344635*	*99292100*	*99344658*
LS300-200-489	*99292045*	*99344638*	*99292106*	*99344661*
LS350-300-508	*99292049*	*99344642*	*99292112*	*99344666*
LS350-250-498	*99292048*	*99344641*	*99292110*	*99344665*
LS350-250-630	*99295418*	*99344644*	*99295419*	*99344668*
LS450-350-397	*99292050*	*99344643*	*99292114*	*99344667*

Shaft without sleeve

Description	Kit No
LS 65-50-241	*99393262*
LS 65-50-330	*99393262*
LS 100-80-241	*99393262*
LS 100-80-356	*99393263*
LS 125-100-279	*99393264*
LS 125-100-305	*99393264*
LS 125-100-381	*99393265*
LS 125-100-388	*99892504*
LS 150-125-305	*99393267*
LS 150-125-381	*99393268*
LS 200-150-305	*99393268*
LS 200-150-381	*99393269*
LS 200-150-483	*99393270*
LS 200-150-483 X6	*99393271*

Description	Kit No
LS 200-150-508	*99393272*
LS 250-200-305	*99393269*
LS 250-200-381	*99393273*
LS 300-200-489	*99393274*
LS 300-250-305	*99393275*
LS 300-250-381	*99393276*
LS 350-250-498	*99393277*
LS 350-300-508	*99393278*
LS 350-250-630	*99393279*
LS 450-350-397	*99393280*

Shaft seal (BBQE)

Pos.	Description	LS 65 LS 100-80-241	LS 100-80-356 LS 125	LS 150 LS 200-150-305	LS 200-150-381 LS 200-150-483 LS 250 LS 300-250-305	LS 300-250-381
	Kit No	***99294141***	***99294142***	***99294153***	***99294155***	***99294156***
105	Shaft seal	2	2	2	2	2
105b	Seal retainer	2	2	2	2	2
105a	Set screw	6	6	6	6	6
79	Slinger	2	2	2	2	2
109	O-ring	-	2	2	2	2
109a	O-ring	-	-	-	-	-
109b	Gasket	2	-	-	-	-
110	O-ring	-	-	-	-	-
113e	Gasket	2	2	2	2	2
54e	Round nut	1	1	1	1	1
54c	Lock washer	1	1	1	1	1
113f	Lip seal	2	2	2	2	2
113g	Lip seal	1	1	1	1	1

Pos.	Description	LS 200-150-483 X6	LS 200-150-508	LS 300-200-489 LS 350-300-508 LS 450-350-397	LS 350-250-498 LS 350-250-630
	Kit No	***99294157***	***99294158***	***99294159***	***99294160***
105	Shaft seal	2	2	2	2
105b	Seal retainer	2	2	2	2
105a	Set screw	6	6	6	6
79	Slinger	2	2	2	2
109	O-ring	2	2	2	2
109a	O-ring	2		2	2
109b	Gasket	-	2	-	-
110	O-ring	-	-	2	2
113e	Gasket	2	2	2	2
54e	Round nut	1	1	1	1
54c	Lock washer	1	1	1	1
113f	Lip seal	2	2	2	2
113g	Lip seal	1	1	1	1

Shaft seal (BBQV)

Pos.	Description	LS 65 LS 100-80-241	LS 100-80-356 LS 125	LS 150 LS 200-150-305	LS 200-150-381 LS 200-150-483 LS 250 LS 300-250-305	LS 300-250-381
	Kit No	***99294161***	***99294162***	***99294163***	***99294164***	***99294165***
105	Shaft seal	2	2	2	2	2
105b	Seal retainer	2	2	2	2	2
105a	Set screw	6	6	6	6	6
79	Slinger	2	2	2	2	2
109	O-ring	-	2	2	2	2
109a	O-ring	-	-	-	-	-
109b	Gasket	2	-	-	-	-
110	O-ring	-	-	-	-	-
113e	Gasket	2	2	2	2	2
54e	Round nut	1	1	1	1	1
54c	Lock washer	1	1	1	1	1
113f	Lip seal	2	2	2	2	2
113g	Lip seal	1	1	1	1	1

Pos.	Description	LS 200-150-483 X6	LS 200-150-508	LS 300-200-489 LS 350-300-508 LS 450-350-397	LS 350-250-498 LS 350-250-630
	Kit No	***99294166***	***99294168***	***99294171***	***99294173***
105	Shaft seal	2	2	2	2
105b	Seal retainer	2	2	2	2
105a	Set screw	6	6	6	6
79	Slinger	2	2	2	2
109	O-ring	2	2	2	2
109a	O-ring	2	-	2	2
109b	Gasket	-	2	-	-
110	O-ring	-	-	2	2
113e	Gasket	2	2	2	2
54e	Round nut	1	1	1	1
54c	Lock washer	1	1	1	1
113f	Lip seal	2	2	2	2
113g	Lip seal	1	1	1	1

Wear ring, bronze (B18)

Pos.	Description	LS 65-50-241 LS 65-50-330	LS 100-80-241	LS 100-80-356B	LS 100-80-356 LS 125-100-279 LS 125-100-381	LS 125-100-388
	Kit No	***96827589***	***96827617***	***97735851***	***96827614***	***97735910***
24	Roll pin	2	2	2	2	2
45b/c	Wear ring	2	2	2	2	2
65	Snap ring	2	2	-	2	-

Pos.	Description	LS 125-100-305	LS 150-125-305 LS 150-125-381	LS 200-150-305C
	Kit No	***96827612***	***96827610***	***96827607***
24	Roll pin	2	2	2
45b/c	Wear ring	2	2	2
65	Snap ring	2	-	-

Pos.	Description	LS 200-150-381	LS 200-150-483 LS 200-150-483 X6	LS 200-150-508	LS 250-200-305
	Kit No	***96827606***	***96840041***	***96827604***	***96827602***
24	Roll pin	2	2	2	2
45a/b/c	Wear ring	2	2	2	2
65	Snap ring	-	2	-	-

Pos.	Description	LS 300-200-489	LS 350-250-498	LS 350-250-630	LS 350-300-508
	Kit No	***96827600***	***96840072***	***96840073***	***96840074***
24	Roll pin	2	2	-	-
45a/b/c	Wear ring	2	2	2	2
65	Snap ring	-	-	2	2

Pos.	Description	LS 450-350-397	LS 250-200-381	LS 300-250-305E	LS 300-250-305A	LS 300-250-381
	Kit No	***96840075***	***96827601***	***96827598***	***97932523***	***96827596***
24	Roll pin	-	2	2	2	2
45a/b/c	Wear ring	2	2	2	2	2
65	Snap ring	-	-	-	-	-

Wear ring, stainless steel (N5)

Pos.	Description	LS 65-50-241 LS 65-50-330	LS 100-80-241	LS 100-80-356B	LS 100-80-356 LS 125-100-279 LS 125-100-381	LS 125-100-388
	Kit No	***96927584***	***96927585***	***97933098***	***96927586***	***97735921***
24	Roll pin	2	2	2	2	2
45b/c	Wear ring	2	2	2	2	2
65	Snap ring	2	2	-	2	-

Pos.	Description	LS 125-100-305	LS 150-125-305 LS 150-125-381	LS 200-150-305C
	Kit No	***96927587***	***96927588***	***96927590***
24	Roll pin	2	2	2
45b/c	Wear ring	2	2	2
65	Snap ring	2	-	-

Pos.	Description	LS 200-150-381	LS 200-150-483 LS 200-150-483 X6	LS 200-150-508	LS 250-200-305
	Kit No	***96927591***	***96927602***	***96927603***	***96927604***
24	Roll pin	2	2	2	2
45a/b/c	Wear ring	2	2	2	2
65	Snap ring	-	2	-	-

Pos.	Description	LS 300-200-489	LS 350-250-498	LS 350-250-630	LS 350-300-508
	Kit No	***96927606***	***96927609***	***96927610***	***96927611***
24	Roll pin	2	2	-	-
45a/b/c	Wear ring	2	2	2	2
65	Snap ring	-	-	2	2

Pos.	Description	LS 450-350-397	LS 250-200-381	LS 300-250-305E	LS 300-250-305A	LS 300-250-381
	Kit No	***96927612***	***96927605***	***96927607***	***97948031***	***96927608***
24	Roll pin	-	2	2	2	2
45a/b/c	Wear ring	2	2	2	2	2
65	Snap ring	-	-	-	-	-

Coupling

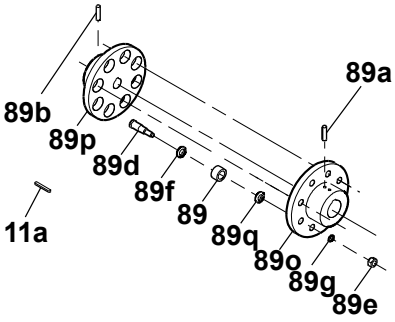

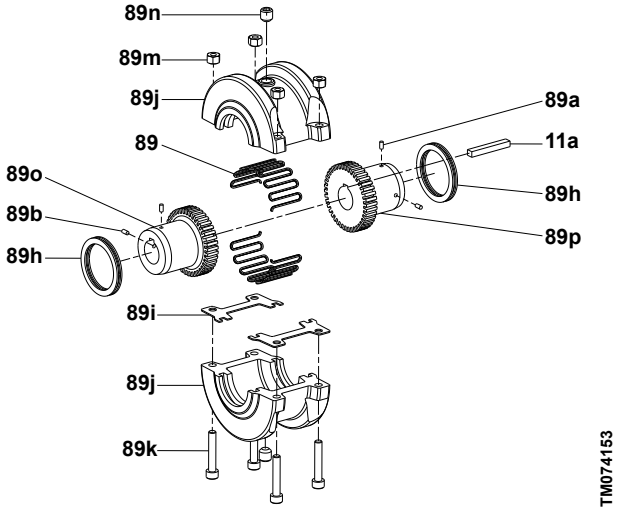

Grundfos standard coupling			Grid coupling
Coupling complete	**Rubber**	**Bolts**	**Coupling complete**
89o:1 x male part 89p:1 x female part 89d:1 set of bolts/rubber parts 89a:1 x hexagon screw 89b:1 x hexagon screw 11a:1 x key	89: 1 set	89d:1 set of bolts 89f:1 set of washers 89q:1 set of washers 89g:1 set of lock washers 89e:1 set of nuts 89:1 set of rubber parts	89o:1 x coupling hub pump match 89p:1 x coupling hub motor match 11a:1 x key

Pump type	Motor brand	Pole	Power [kW]	Frame size	Shaft diameter [mm]		Coupling type	Grundfos standard coupling, pin bush			Grid coupling	
					Pump	Motor		Kit No	Rubber	Bolts	Coupling complete	Assemble set
LS 65-50-241	MG	2	11	160MB	24	42	D180	*99392625*	*96789247*	*96809941*	-	-
LS 65-50-241	MG	2	15	160MD	24	42	D180	*99392625*	*96789247*	*96809941*	-	-
LS 65-50-241	MG	2	18.5	160LB	24	42	D180	*99392625*	*96789247*	*96809941*	-	-
LS 65-50-241	MG	2	22	180MB	24	48	D200	*99392620*	*96789269*	*96809942*	-	-
LS 65-50-241	Siemens	2	30	200L	24	55	D200	*99392621*	*96789269*	*96809942*	-	-
LS 65-50-241	Siemens	2	37	200L	24	55	D200	*99392621*	*96789269*	*96809942*	-	-
LS 65-50-241	Siemens	2	45	225M	24	55	D200	*99392621*	*96789269*	*96809942*	-	-
LS 65-50-241	MMG-G	2	11	160M	24	42	D180	*99392625*	*96789247*	*96809941*	-	-
LS 65-50-241	MMG-G	2	15	160M	24	42	D180	*99392625*	*96789247*	*96809941*	-	-
LS 65-50-241	MMG-G	2	18.5	160L	24	42	D180	*99392625*	*96789247*	*96809941*	-	-
LS 65-50-241	MMG-G	2	22	180M	24	48	D200	*99392620*	*96789269*	*96809942*	-	-
LS 65-50-241	MMG-G	2	30	200L	24	55	D200	*99392621*	*96789269*	*96809942*	-	-
LS 65-50-241	MMG-G	2	37	200L	24	55	D200	*99392621*	*96789269*	*96809942*	-	-
LS 65-50-241	MMG-G	2	45	225MA	24	55	D200	*99392621*	*96789269*	*96809942*	-	-
LS 65-50-241	MMG-G	2	55	250MA	24	60	D200	*99390324*	*96789269*	*96809942*	-	-
LS 65-50-241	MMG-G	2	75	280SA	24	65	D200	*99596715*	*96789269*	*96809942*	-	-
LS 65-50-241	MG	4	1.5	90LC	24	24	D125	*99392622*	*96789247*	*96809939*	-	-
LS 65-50-241	MG	4	2.2	100LB	24	28	D140	*99392623*	*96789247*	*96809940*	-	-
LS 65-50-241	MG	4	3	100LC	24	28	D140	*99392623*	*96789247*	*96809940*	-	-
LS 65-50-241	MG	4	4	112MC	24	28	D140	*99392623*	*96789247*	*96809940*	-	-
LS 65-50-241	MG	4	5.5	132SB	24	38	D160	*99392624*	*96789247*	*96809941*	-	-
LS 65-50-241	MMG-G	4	1.5	90L	24	24	D125	*99392622*	*96789247*	*96809939*	-	-
LS 65-50-241	MMG-G	4	11	160M	24	42	D180	*99392625*	*96789247*	*96809941*	-	-
LS 65-50-241	MMG-G	4	2.2	100L	24	28	D140	*99392623*	*96789247*	*96809940*	-	-
LS 65-50-241	MMG-G	4	3	100L	24	28	D140	*99392623*	*96789247*	*96809940*	-	-
LS 65-50-241	MMG-G	4	4	112M	24	28	D140	*99392623*	*96789247*	*96809940*	-	-
LS 65-50-241	MMG-G	4	5.5	132S	24	38	D160	*99392624*	*96789247*	*96809941*	-	-

Pump type	Motor brand	Pole	Power [kW]	Frame size	Shaft diameter [mm]		Coupling type	Grundfos standard coupling, pin bush			Grid coupling	
					Pump	Motor		Kit No	Rubber	Bolts	Coupling complete	Assemble set
LS 65-50-241	MMG-G	4	7.5	132M	24	38	D160	99392624	96789247	96809941	-	-
LS 65-50-330	MG	4	11	160MA	24	42	D180	99392625	96789247	96809941	-	-
LS 65-50-330	MG	4	15	160LB	24	42	D180	99392625	96789247	96809941	-	-
LS 65-50-330	MG	4	4	112MC	24	28	D140	99392623	96789247	96809940	-	-
LS 65-50-330	MG	4	5.5	132SB	24	38	D160	99392624	96789247	96809941	-	-
LS 65-50-330	MG	4	7.5	132MB	24	38	D160	99392624	96789247	96809941	-	-
LS 65-50-330	MMG-G	4	11	160M	24	42	D180	99392625	96789247	96809941	-	-
LS 65-50-330	MMG-G	4	15	160L	24	42	D180	99392625	96789247	96809941	-	-
LS 65-50-330	MMG-G	4	18.5	180M	24	48	D200	99392620	96789269	96809942	-	-
LS 65-50-330	MMG-G	4	22	180L	24	48	D200	99392620	96789269	96809942	-	-
LS 65-50-330	MMG-G	4	4	112M	24	28	D140	99392623	96789247	96809940	-	-
LS 65-50-330	MMG-G	4	5.5	132S	24	38	D160	99392624	96789247	96809941	-	-
LS 65-50-330	MMG-G	4	7.5	132M	24	38	D160	99392624	96789247	96809941	-	-
LS 100-80-241	MG	2	15	160MD	24	42	D180	99392625	96789247	96809941	-	-
LS 100-80-241	MG	2	18.5	160LB	24	42	D180	99392625	96789247	96809941	-	-
LS 100-80-241	MG	2	22	180MB	24	48	D200	99392620	96789269	96809942	-	-
LS 100-80-241	Siemens	2	30	200L	24	55	D200	99392621	96789269	96809942	-	-
LS 100-80-241	Siemens	2	37	200L	24	55	D200	99392621	96789269	96809942	-	-
LS 100-80-241	Siemens	2	45	225M	24	55	D200	99392621	96789269	96809942	-	-
LS 100-80-241	Siemens	2	55	250M	24	60	D200	99390324	96789269	96809942	-	-
LS 100-80-241	Siemens	2	75	280S	24	65	D200	99390342	96789269	96809942	-	-
LS 100-80-241	MMG-G	2	110	315SA	24	65	D200	99390342	96789269	96809942	-	-
LS 100-80-241	MMG-G	2	15	160M	24	42	D180	99392625	96789247	96809941	-	-
LS 100-80-241	MMG-G	2	18.5	160L	24	42	D180	99392625	96789247	96809941	-	-
LS 100-80-241	MMG-G	2	22	180M	24	48	D200	99392620	96789269	96809942	-	-
LS 100-80-241	MMG-G	2	30	200L	24	55	D200	99392621	96789269	96809942	-	-
LS 100-80-241	MMG-G	2	37	200L	24	55	D200	99392621	96789269	96809942	-	-
LS 100-80-241	MMG-G	2	45	225MA	24	55	D200	99392621	96789269	96809942	-	-
LS 100-80-241	MMG-G	2	55	250MA	24	60	D200	99390324	96789269	96809942	-	-
LS 100-80-241	MMG-G	2	75	280SA	24	65	D200	99596715	96789269	96809942	-	-
LS 100-80-241	MMG-G	2	90	280MA	24	65	D200	99390342	96789269	96809942	-	-
LS 100-80-241	MG	4	2.2	100LB	24	28	D140	99392623	96789247	96809940	-	-
LS 100-80-241	MG	4	3	100LC	24	28	D140	99392623	96789247	96809940	-	-
LS 100-80-241	MG	4	4	112MC	24	28	D140	99392623	96789247	96809940	-	-
LS 100-80-241	MG	4	5.5	132SB	24	38	D160	99392624	96789247	96809941	-	-
LS 100-80-241	MG	4	7.5	132MB	24	38	D160	99392624	96789247	96809941	-	-
LS 100-80-241	MMG-G	4	11	160M	24	42	D180	99392625	96789247	96809941	-	-
LS 100-80-241	MMG-G	4	15	160L	24	42	D180	99392625	96789247	96809941	-	-
LS 100-80-241	MMG-G	4	2.2	100L	24	28	D140	99392623	96789247	96809940	-	-
LS 100-80-241	MMG-G	4	3	100L	24	28	D140	99392623	96789247	96809940	-	-
LS 100-80-241	MMG-G	4	4	112M	24	28	D140	99392623	96789247	96809940	-	-
LS 100-80-241	MMG-G	4	5.5	132S	24	38	D160	99392624	96789247	96809941	-	-
LS 100-80-241	MMG-G	4	7.5	132M	24	38	D160	99392624	96789247	96809941	-	-
LS 100-80-356	MG	4	11	160MA	34	42	D180	99390290	96789247	96809941	-	-
LS 100-80-356	MG	4	15	160LB	34	42	D180	99390290	96789247	96809941	-	-
LS 100-80-356	Siemens	4	18.5	180M	34	48	D200	99390291	96789269	96809942	-	-
LS 100-80-356	Siemens	4	22	180L	34	48	D200	99390291	96789269	96809942	-	-
LS 100-80-356	Siemens	4	30	200L	34	55	D200	99390292	96789269	96809942	-	-
LS 100-80-356	MG	4	7.5	132MB	34	38	D160	99390295	96789247	96809941	-	-
LS 100-80-356	MMG-G	4	11	160M	34	42	D180	99390290	96789247	96809941	-	-
LS 100-80-356	MMG-G	4	15	160L	34	42	D180	99390290	96789247	96809941	-	-
LS 100-80-356	MMG-G	4	18.5	180M	34	48	D200	99390291	96789269	96809942	-	-

Pump type	Motor brand	Pole	Power [kW]	Frame size	Shaft diameter [mm]		Coupling type	Grundfos standard coupling, pin bush			Grid coupling	
					Pump	Motor		Kit No	Rubber	Bolts	Coupling complete	Assemble set
LS 100-80-356	MMG-G	4	22	180L	34	48	D200	99390291	96789269	96809942	-	-
LS 100-80-356	MMG-G	4	30	200L	34	55	D200	99390292	96789269	96809942	-	-
LS 100-80-356	MMG-G	4	37	225S	34	60	D224	99390293	96789269	96809942	-	-
LS 100-80-356	MMG-G	4	45	225M	34	60	D224	99390293	96789269	96809942	-	-
LS 100-80-356	MMG-G	4	7.5	132M	34	38	D160	99390295	96789247	96809941	-	-
LS 125-100-279	MG	2	18.5	160LB	34	42	D180	99390290	96789247	96809941	-	-
LS 125-100-279	MG	2	22	180MB	34	48	D200	99390291	96789269	96809942	-	-
LS 125-100-279	Siemens	2	30	200L	34	55	D200	99390292	96789269	96809942	-	-
LS 125-100-279	Siemens	2	37	200L	34	55	D200	99390292	96789269	96809942	-	-
LS 125-100-279	Siemens	2	45	225M	34	55	D200	99390292	96789269	96809942	-	-
LS 125-100-279	Siemens	2	55	250M	34	60	D224	99390293	96789269	96809942	-	-
LS 125-100-279	Siemens	2	75	280S	34	65	D224	99390294	96789269	96809942	-	-
LS 125-100-279	MMG-G	2	110	315SA	34	65	D224	99390294	96789269	96809942	-	-
LS 125-100-279	MMG-G	2	18.5	160L	34	42	D180	99390290	96789247	96809941	-	-
LS 125-100-279	MMG-G	2	22	180M	34	48	D200	99390291	96789269	96809942	-	-
LS 125-100-279	MMG-G	2	30	200L	34	55	D200	99390292	96789269	96809942	-	-
LS 125-100-279	MMG-G	2	37	200L	34	55	D200	99390292	96789269	96809942	-	-
LS 125-100-279	MMG-G	2	45	225MA	34	55	D200	99390292	96789269	96809942	-	-
LS 125-100-279	MMG-G	2	55	250MA	34	60	D224	99390293	96789269	96809942	-	-
LS 125-100-279	MMG-G	2	75	280SA	34	65	D224	99390294	96789269	96809942	-	-
LS 125-100-279	MMG-G	2	90	280MA	34	65	D224	99390294	96789269	96809942	-	-
LS 125-100-279	MG	4	11	160MA	34	42	D180	99390290	96789247	96809941	-	-
LS 125-100-279	MG	4	15	160LB	34	42	D180	99390290	96789247	96809941	-	-
LS 125-100-279	MG	4	2.2	100LB	34	28	D160	99390296	96789247	96809941	-	-
LS 125-100-279	MG	4	3	100LC	34	28	D160	99390296	96789247	96809941	-	-
LS 125-100-279	MG	4	4	112MC	34	28	D160	99390296	96789247	96809941	-	-
LS 125-100-279	MG	4	5.5	132SB	34	38	D160	99390295	96789247	96809941	-	-
LS 125-100-279	MG	4	7.5	132MB	34	38	D160	99390295	96789247	96809941	-	-
LS 125-100-279	MMG-G	4	11	160M	34	42	D180	99390290	96789247	96809941	-	-
LS 125-100-279	MMG-G	4	15	160L	34	42	D180	99390290	96789247	96809941	-	-
LS 125-100-279	MMG-G	4	18.5	180M	34	48	D200	99390291	96789269	96809942	-	-
LS 125-100-279	MMG-G	4	2.2	100L	34	28	D160	99390296	96789247	96809941	-	-
LS 125-100-279	MMG-G	4	22	180L	34	48	D200	99390291	96789269	96809942	-	-
LS 125-100-279	MMG-G	4	3	100L	34	28	D160	99390296	96789247	96809941	-	-
LS 125-100-279	MMG-G	4	4	112M	34	28	D160	99390296	96789247	96809941	-	-
LS 125-100-279	MMG-G	4	5.5	132S	34	38	D160	99390295	96789247	96809941	-	-
LS 125-100-279	MMG-G	4	7.5	132M	34	38	D160	99390295	96789247	96809941	-	-
LS 125-100-305	Siemens	2	30	200L	34	55	D200	99390292	96789269	96809942	-	-
LS 125-100-305	Siemens	2	37	200L	34	55	D200	99390292	96789269	96809942	-	-
LS 125-100-305	Siemens	2	45	225M	34	55	D200	99390292	96789269	96809942	-	-
LS 125-100-305	Siemens	2	55	250M	34	60	D224	99390293	96789269	96809942	-	-
LS 125-100-305	Siemens	2	75	280S	34	65	D224	99390294	96789269	96809942	-	-
LS 125-100-305	Siemens	2	90	280M	34	65	D224	99390294	96789269	96809942	-	-
LS 125-100-305	Siemens	2	110	315S	34	65	D224	99390294	96789269	96809942	-	-
LS 125-100-305	Siemens	2	132	315M	34	65	D224	99390294	96789269	96809942	-	-
LS 125-100-305	Siemens	2	160	315L	34	65	D224	99390294	96789269	96809942	-	-
LS 125-100-305	MMG-G	2	110	315SA	34	65	D224	99390294	96789269	96809942	-	-
LS 125-100-305	MMG-G	2	132	315MA	34	65	D224	99390294	96789269	96809942	-	-
LS 125-100-305	MMG-G	2	30	200L	34	55	D200	99390292	96789269	96809942	-	-
LS 125-100-305	MMG-G	2	37	200L	34	55	D200	99390292	96789269	96809942	-	-
LS 125-100-305	MMG-G	2	45	225MA	34	55	D200	99390292	96789269	96809942	-	-
LS 125-100-305	MMG-G	2	55	250MA	34	60	D224	99390293	96789269	96809942	-	-

Pump type	Motor brand	Pole	Power [kW]	Frame size	Shaft diameter [mm]		Coupling type	Grundfos standard coupling, pin bush			Grid coupling	
					Pump	Motor		Kit No	Rubber	Bolts	Coupling complete	Assemble set
LS 125-100-305	MMG-G	2	75	280SA	34	65	D224	99390294	96789269	96809942	-	-
LS 125-100-305	MMG-G	2	90	280MA	34	65	D224	99390294	96789269	96809942	-	-
LS 125-100-305	MMG-G	2	160	315L	34	65	D224	99390294	96789269	96809942	-	-
LS 125-100-305	MG	4	11	160MA	34	42	D180	99390290	96789247	96809941	-	-
LS 125-100-305	MG	4	15	160LB	34	42	D180	99390290	96789247	96809941	-	-
LS 125-100-305	Siemens	4	18.5	180M	34	48	D200	99390291	96789269	96809942	-	-
LS 125-100-305	Siemens	4	22	180L	34	48	D200	99390291	96789269	96809942	-	-
LS 125-100-305	MG	4	4	112MC	34	28	D160	99390296	96789247	96809941	-	-
LS 125-100-305	MG	4	5.5	132SB	34	38	D160	99390295	96789247	96809941	-	-
LS 125-100-305	MG	4	7.5	132MB	34	38	D160	99390295	96789247	96809941	-	-
LS 125-100-305	MMG-G	4	11	160M	34	42	D180	99390290	96789247	96809941	-	-
LS 125-100-305	MMG-G	4	15	160L	34	42	D180	99390290	96789247	96809941	-	-
LS 125-100-305	MMG-G	4	18.5	180M	34	48	D200	99390291	96789269	96809942	-	-
LS 125-100-305	MMG-G	4	22	180L	34	48	D200	99390291	96789269	96809942	-	-
LS 125-100-305	MMG-G	4	30	200L	34	55	D200	99390292	96789269	96809942	-	-
LS 125-100-305	MMG-G	4	37	225S	34	60	D224	99390293	96789269	96809942	-	-
LS 125-100-305	MMG-G	4	4	112M	34	28	D160	99390296	96789247	96809941	-	-
LS 125-100-305	MMG-G	4	45	225M	34	60	D224	99390293	96789269	96809942	-	-
LS 125-100-305	MMG-G	4	5.5	132S	34	38	D160	99390295	96789247	96809941	-	-
LS 125-100-305	MMG-G	4	7.5	132M	34	38	D160	99390295	96789247	96809941	-	-
LS 125-100-381	MG	4	11	160MA	34	42	D180	99390290	96789247	96809941	-	-
LS 125-100-381	MG	4	15	160LB	34	42	D180	99390290	96789247	96809941	-	-
LS 125-100-381	Siemens	4	18.5	180M	34	48	D200	99390291	96789269	96809942	-	-
LS 125-100-381	Siemens	4	22	180L	34	48	D200	99390291	96789269	96809942	-	-
LS 125-100-381	Siemens	4	30	200L	34	55	D200	99390292	96789269	96809942	-	-
LS 125-100-381	Siemens	4	37	225S	34	60	D224	99390293	96789269	96809942	-	-
LS 125-100-381	Siemens	4	45	225M	34	60	D224	99390293	96789269	96809942	-	-
LS 125-100-381	Siemens	4	55	250M	34	65	D224	99390294	96789269	96809942	-	-
LS 125-100-381	Siemens	4	75	280S	34	75	D250	99390297	96789274	96809943	-	-
LS 125-100-381	MMG-G	4	11	160M	34	42	D180	99390290	96789247	96809941	-	-
LS 125-100-381	MMG-G	4	110	315S	34	80	D250	99390326	96789274	96809943	-	-
LS 125-100-381	MMG-G	4	15	160L	34	42	D180	99390290	96789247	96809941	-	-
LS 125-100-381	MMG-G	4	18.5	180M	34	48	D200	99390291	96789269	96809942	-	-
LS 125-100-381	MMG-G	4	22	180L	34	48	D200	99390291	96789269	96809942	-	-
LS 125-100-381	MMG-G	4	30	200L	34	55	D200	99390292	96789269	96809942	-	-
LS 125-100-381	MMG-G	4	37	225S	34	60	D224	99390293	96789269	96809942	-	-
LS 125-100-381	MMG-G	4	45	225M	34	60	D224	99390293	96789269	96809942	-	-
LS 125-100-381	MMG-G	4	55	250M	34	65	D224	99390294	96789269	96809942	-	-
LS 125-100-381	MMG-G	4	75	280S	34	75	D250	99390297	96789274	96809943	-	-
LS 125-100-381	MMG-G	4	90	280M	34	75	D250	99390297	96789274	96809943	-	-
LS 150-125-305	MG	4	11	160MA	34	42	D180	99390290	96789247	96809941	-	-
LS 150-125-305	MG	4	15	160LB	34	42	D180	99390290	96789247	96809941	-	-
LS 150-125-305	Siemens	4	18.5	180M	34	48	D200	99390291	96789269	96809942	-	-
LS 150-125-305	Siemens	4	22	180L	34	48	D200	99390291	96789269	96809942	-	-
LS 150-125-305	Siemens	4	30	200L	34	55	D200	99390292	96789269	96809942	-	-
LS 150-125-305	Siemens	4	37	225S	34	60	D224	99390293	96789269	96809942	-	-
LS 150-125-305	MG	4	5.5	132SB	34	38	D160	99390295	96789247	96809941	-	-
LS 150-125-305	MG	4	7.5	132MB	34	38	D160	99390295	96789247	96809941	-	-
LS 150-125-305	MMG-G	4	11	160M	34	42	D180	99390290	96789247	96809941	-	-
LS 150-125-305	MMG-G	4	15	160L	34	42	D180	99390290	96789247	96809941	-	-
LS 150-125-305	MMG-G	4	18.5	180M	34	48	D200	99390291	96789269	96809942	-	-
LS 150-125-305	MMG-G	4	22	180L	34	48	D200	99390291	96789269	96809942	-	-

Pump type	Motor brand	Pole	Power [kW]	Frame size	Shaft diameter [mm]		Coupling type	Grundfos standard coupling, pin bush			Grid coupling	
					Pump	Motor		Kit No	Rubber	Bolts	Coupling complete	Assemble set
LS 150-125-305	MMG-G	4	30	200L	34	55	D200	99390292	96789269	96809942	-	-
LS 150-125-305	MMG-G	4	37	225S	34	60	D224	99390293	96789269	96809942	-	-
LS 150-125-305	MMG-G	4	45	225M	34	60	D224	99390293	96789269	96809942	-	-
LS 150-125-305	MMG-G	4	5.5	132S	34	38	D160	99390295	96789247	96809941	-	-
LS 150-125-305	MMG-G	4	55	250M	34	65	D224	99390294	96789269	96809942	-	-
LS 150-125-305	MMG-G	4	7.5	132M	34	38	D160	99390295	96789247	96809941	-	-
LS 150-125-381	MG	4	15	160LB	34	42	D180	99390290	96789247	96809941	-	-
LS 150-125-381	Siemens	4	18.5	180M	34	48	D200	99390291	96789269	96809942	-	-
LS 150-125-381	Siemens	4	22	180L	34	48	D200	99390291	96789269	96809942	-	-
LS 150-125-381	Siemens	4	30	200L	34	55	D200	99390292	96789269	96809942	-	-
LS 150-125-381	Siemens	4	37	225S	34	60	D224	99390293	96789269	96809942	-	-
LS 150-125-381	Siemens	4	45	225M	34	60	D224	99390293	96789269	96809942	-	-
LS 150-125-381	Siemens	4	55	250M	34	65	D224	99390294	96789269	96809942	-	-
LS 150-125-381	Siemens	4	75	280S	34	75	D250	99390297	96789274	96809943	-	-
LS 150-125-381	MMG-G	4	110	315S	34	80	D250	99390326	96789274	96809943	-	-
LS 150-125-381	MMG-G	4	132	315M	34	80	D250	99390326	96789274	96809943	-	-
LS 150-125-381	MMG-G	4	15	160L	34	42	D180	99390290	96789247	96809941	-	-
LS 150-125-381	MMG-G	4	18.5	180M	34	48	D200	99390291	96789269	96809942	-	-
LS 150-125-381	MMG-G	4	22	180L	34	48	D200	99390291	96789269	96809942	-	-
LS 150-125-381	MMG-G	4	30	200L	34	55	D200	99390292	96789269	96809942	-	-
LS 150-125-381	MMG-G	4	37	225S	34	60	D224	99390293	96789269	96809942	-	-
LS 150-125-381	MMG-G	4	45	225M	34	60	D224	99390293	96789269	96809942	-	-
LS 150-125-381	MMG-G	4	55	250M	34	65	D224	99390294	96789269	96809942	-	-
LS 150-125-381	MMG-G	4	75	280S	34	75	D250	99390297	96789274	96809943	-	-
LS 150-125-381	MMG-G	4	90	280M	34	75	D250	99390297	96789274	96809943	-	-
LS 200-150-305	MG	4	11	160MA	34	42	D180	99390290	96789247	96809941	-	-
LS 200-150-305	MG	4	15	160LB	34	42	D180	99390290	96789247	96809941	-	-
LS 200-150-305	Siemens	4	18.5	180M	34	48	D200	99390291	96789269	96809942	-	-
LS 200-150-305	Siemens	4	22	180L	34	48	D200	99390291	96789269	96809942	-	-
LS 200-150-305	Siemens	4	30	200L	34	55	D200	99390292	96789269	96809942	-	-
LS 200-150-305	Siemens	4	37	225S	34	60	D224	99390293	96789269	96809942	-	-
LS 200-150-305	Siemens	4	45	225M	34	60	D224	99390293	96789269	96809942	-	-
LS 200-150-305	MMG-G	4	11	160M	34	42	D180	99390290	96789247	96809941	-	-
LS 200-150-305	MMG-G	4	15	160L	34	42	D180	99390290	96789247	96809941	-	-
LS 200-150-305	MMG-G	4	18.5	180M	34	48	D200	99390291	96789269	96809942	-	-
LS 200-150-305	MMG-G	4	22	180L	34	48	D200	99390291	96789269	96809942	-	-
LS 200-150-305	MMG-G	4	30	200L	34	55	D200	99390292	96789269	96809942	-	-
LS 200-150-305	MMG-G	4	37	225S	34	60	D224	99390293	96789269	96809942	-	-
LS 200-150-305	MMG-G	4	45	225M	34	60	D224	99390293	96789269	96809942	-	-
LS 200-150-305	MMG-G	4	55	250M	34	65	D224	99390294	96789269	96809942	-	-
LS 200-150-305	MMG-G	4	75	280S	34	75	D250	99390297	96789274	96809943	-	-
LS 200-150-381	Siemens	4	110	315S	44.45	80	D250	99390303	96789274	96809943	-	-
LS 200-150-381	Siemens	4	18.5	180M	44.45	48	D200	99390298	96789269	96809942	-	-
LS 200-150-381	Siemens	4	22	180L	44.45	48	D200	99390298	96789269	96809942	-	-
LS 200-150-381	Siemens	4	30	200L	44.45	55	D200	99390299	96789269	96809942	-	-
LS 200-150-381	Siemens	4	37	225S	44.45	60	D224	99390300	96789269	96809942	-	-
LS 200-150-381	Siemens	4	45	225M	44.45	60	D224	99390300	96789269	96809942	-	-
LS 200-150-381	Siemens	4	55	250M	44.45	65	D224	99390301	96789269	96809942	-	-
LS 200-150-381	Siemens	4	75	280S	44.45	75	D250	99390302	96789274	96809943	-	-
LS 200-150-381	Siemens	4	90	280M	44.45	75	D250	99390302	96789274	96809943	-	-
LS 200-150-381	MMG-G	4	110	315S	44.45	80	D250	99390303	96789274	96809943	-	-
LS 200-150-381	MMG-G	4	132	315M	44.45	80	D250	99390303	96789274	96809943	-	-

Pump type	Motor brand	Pole	Power [kW]	Frame size	Shaft diameter [mm]		Coupling type	Grundfos standard coupling, pin bush			Grid coupling	
					Pump	Motor		Kit No	Rubber	Bolts	Coupling complete	Assemble set
LS 200-150-381	MMG-G	4	160	315L	44.45	80	D250	99390303	96789274	96809943	-	-
LS 200-150-381	MMG-G	4	18.5	180M	44.45	48	D200	99390298	96789269	96809942	-	-
LS 200-150-381	MMG-G	4	200	315L	44.45	80	D250	99390303	96789274	96809943	-	-
LS 200-150-381	MMG-G	4	22	180L	44.45	48	D200	99390298	96789269	96809942	-	-
LS 200-150-381	MMG-G	4	30	200L	44.45	55	D200	99390299	96789269	96809942	-	-
LS 200-150-381	MMG-G	4	37	225S	44.45	60	D224	99390300	96789269	96809942	-	-
LS 200-150-381	MMG-G	4	45	225M	44.45	60	D224	99390300	96789269	96809942	-	-
LS 200-150-381	MMG-G	4	55	250M	44.45	65	D224	99390301	96789269	96809942	-	-
LS 200-150-381	MMG-G	4	75	280S	44.45	75	D250	99390302	96789274	96809943	-	-
LS 200-150-381	MMG-G	4	90	280M	44.45	75	D250	99390302	96789274	96809943	-	-
LS 200-150-483	Siemens	4	110	315S	44.45	80	D250	99390303	96789274	96809943	-	-
LS 200-150-483	Siemens	4	132	315M	44.45	80	D250	99390303	96789274	96809943	-	-
LS 200-150-483	Siemens	4	160	315L	44.45	80	D250	99390303	96789274	96809943	-	-
LS 200-150-483	Siemens	4	55	250M	44.45	65	D224	99390301	96789269	96809942	-	-
LS 200-150-483	Siemens	4	75	280S	44.45	75	D250	99390302	96789274	96809943	-	-
LS 200-150-483	Siemens	4	90	280M	44.45	75	D250	99390302	96789274	96809943	-	-
LS 200-150-483	MMG-G	4	110	315S	44.45	80	D250	99390303	96789274	96809943	-	-
LS 200-150-483	MMG-G	4	110	315S	50.8	80	D250	99596703	96789274	96809943	-	-
LS 200-150-483	MMG-G	4	132	315M	50.8	80	D250	99596703	96789274	96809943	-	-
LS 200-150-483	MMG-G	4	160	315L	50.8	80	D250	99596703	96789274	96809943	-	-
LS 200-150-483	MMG-G	4	200	315L	50.8	80	D250	99596703	96789274	96809943	-	-
LS 200-150-483	MMG-G	4	250	315M	50.8	100	D250	99596704	96789274	96809943	-	-
LS 200-150-483	MMG-G	4	55	250M	44.45	65	D224	99390301	96789269	96809942	-	-
LS 200-150-483	MMG-G	4	75	280S	44.45	75	D250	99390302	96789274	96809943	-	-
LS 200-150-483	MMG-G	4	90	280M	44.45	75	D250	99390302	96789274	96809943	-	-
LS 200-150-483	Siemens	6	15	180L	44.45	48	D200	99390298	96789269	96809942	-	-
LS 200-150-483	Siemens	6	18.5	200L	44.45	55	D200	99390299	96789269	96809942	-	-
LS 200-150-483	Siemens	6	22	200L	44.45	55	D200	99390299	96789269	96809942	-	-
LS 200-150-483	Siemens	6	30	225M	44.45	60	D224	99390300	96789269	96809942	-	-
LS 200-150-483	Siemens	6	37	250M	44.45	65	D224	99390301	96789269	96809942	-	-
LS 200-150-483	Siemens	6	45	280S	44.45	75	D250	99390302	96789274	96809943	-	-
LS 200-150-483	MMG-G	6	15	180L	44.45	48	D200	99390298	96789269	96809942	-	-
LS 200-150-483	MMG-G	6	18.5	200L	44.45	55	D200	99390299	96789269	96809942	-	-
LS 200-150-483	MMG-G	6	22	200L	44.45	55	D200	99390299	96789269	96809942	-	-
LS 200-150-483	MMG-G	6	30	225M	44.45	60	D224	99390300	96789269	96809942	-	-
LS 200-150-483	MMG-G	6	37	250M	44.45	65	D224	99390301	96789269	96809942	-	-
LS 200-150-483	MMG-G	6	45	280S	44.45	75	D250	99390302	96789274	96809943	-	-
LS 200-150-483	MMG-G	6	55	280M	44.45	75	D250	99390302	96789274	96809943	-	-
LS 200-150-483	MMG-G	6	75	315S	44.45	80	D250	99390303	96789274	96809943	-	-
LS 200-150-508	Siemens	4	110	315S	53.98	80	D250	99390307	96789274	96809943	-	-
LS 200-150-508	Siemens	4	132	315M	53.98	80	D250	99390307	96789274	96809943	-	-
LS 200-150-508	Siemens	4	160	315L	53.98	80	D250	99390307	96789274	96809943	-	-
LS 200-150-508	Siemens	4	200	315L	53.98	80	D250	99390307	96789274	96809943	-	-
LS 200-150-508	Siemens	4	250	315L	53.98	85	D250	99390308	96789274	96809943	-	-
LS 200-150-508	Siemens	4	55	250M	53.98	65	D224	99390305	96789269	96809942	-	-
LS 200-150-508	Siemens	4	75	280S	53.98	75	D250	99390306	96789274	96809943	-	-
LS 200-150-508	Siemens	4	90	280M	53.98	75	D250	99390306	96789274	96809943	-	-
LS 200-150-508	MMG-G	4	110	315S	53.98	80	D250	99390307	96789274	96809943	-	-
LS 200-150-508	MMG-G	4	132	315M	53.98	80	D250	99390307	96789274	96809943	-	-
LS 200-150-508	MMG-G	4	160	315L	53.98	80	D250	99390307	96789274	96809943	-	-
LS 200-150-508	MMG-G	4	200	315L	53.98	80	D250	99390307	96789274	96809943	-	-
LS 200-150-508	MMG-G	4	250	315M	53.98	100	D250	99596705	96789274	96809943	-	-

Pump type	Motor brand	Pole	Power [kW]	Frame size	Shaft diameter [mm]		Coupling type	Grundfos standard coupling, pin bush			Grid coupling	
					Pump	Motor		Kit No	Rubber	Bolts	Coupling complete	Assemble set
LS 200-150-508	MMG-G	4	315	355L	53.98	100	GRID 110	-	-	-	99596706	99392619
LS 200-150-508	MMG-G	4	355	355C	53.98	100	GRID 110	-	-	-	99596706	99392619
LS 200-150-508	MMG-G	4	55	250M	53.98	65	D224	99390305	96789269	96809942	-	-
LS 200-150-508	MMG-G	4	75	280S	53.98	75	D250	99390306	96789274	96809943	-	-
LS 200-150-508	MMG-G	4	90	280M	53.98	75	D250	99390306	96789274	96809943	-	-
LS 200-150-508	Siemens	6	18.5	200L	53.98	55	D200	99390317	96789269	96809942	-	-
LS 200-150-508	Siemens	6	22	200L	53.98	55	D200	99390317	96789269	96809942	-	-
LS 200-150-508	Siemens	6	30	225M	53.98	60	D224	99390318	96789269	96809942	-	-
LS 200-150-508	Siemens	6	37	250M	53.98	65	D224	99390305	96789269	96809942	-	-
LS 200-150-508	Siemens	6	45	280S	53.98	75	D250	99390306	96789274	96809943	-	-
LS 200-150-508	Siemens	6	55	280M	53.98	75	D250	99390306	96789274	96809943	-	-
LS 200-150-508	Siemens	6	75	315S	53.98	80	D250	99390307	96789274	96809943	-	-
LS 200-150-508	MMG-G	6	110	315L	53.98	80	D250	99390307	96789274	96809943	-	-
LS 200-150-508	MMG-G	6	132	315L	53.98	80	D250	99390307	96789274	96809943	-	-
LS 200-150-508	MMG-G	6	18.5	200L	53.98	55	D200	99390317	96789269	96809942	-	-
LS 200-150-508	MMG-G	6	22	200L	53.98	55	D200	99390317	96789269	96809942	-	-
LS 200-150-508	MMG-G	6	30	225M	53.98	60	D224	99390318	96789269	96809942	-	-
LS 200-150-508	MMG-G	6	37	250M	53.98	65	D224	99390305	96789269	96809942	-	-
LS 200-150-508	MMG-G	6	45	280S	53.98	75	D250	99390306	96789274	96809943	-	-
LS 200-150-508	MMG-G	6	55	280M	53.98	75	D250	99390306	96789274	96809943	-	-
LS 200-150-508	MMG-G	6	75	315S	53.98	80	D250	99390307	96789274	96809943	-	-
LS 200-150-508	MMG-G	6	90	315M	53.98	80	D250	99390307	96789274	96809943	-	-
LS 250-200-305	MG	4	15	160LB	44.45	42	D180	99390309	96789247	96809941	-	-
LS 250-200-305	Siemens	4	18.5	180M	44.45	48	D200	99390298	96789269	96809942	-	-
LS 250-200-305	Siemens	4	22	180L	44.45	48	D200	99390298	96789269	96809942	-	-
LS 250-200-305	Siemens	4	30	200L	44.45	55	D200	99390299	96789269	96809942	-	-
LS 250-200-305	Siemens	4	37	225S	44.45	60	D224	99390300	96789269	96809942	-	-
LS 250-200-305	Siemens	4	45	225M	44.45	60	D224	99390300	96789269	96809942	-	-
LS 250-200-305	Siemens	4	55	250M	44.45	65	D224	99390301	96789269	96809942	-	-
LS 250-200-305	MMG-G	4	110	315S	44.45	80	D250	99390303	96789274	96809943	-	-
LS 250-200-305	MMG-G	4	15	160L	44.45	42	D180	99390309	96789247	96809941	-	-
LS 250-200-305	MMG-G	4	18.5	180M	44.45	48	D200	99390298	96789269	96809942	-	-
LS 250-200-305	MMG-G	4	22	180L	44.45	48	D200	99390298	96789269	96809942	-	-
LS 250-200-305	MMG-G	4	30	200L	44.45	55	D200	99390299	96789269	96809942	-	-
LS 250-200-305	MMG-G	4	37	225S	44.45	60	D224	99390300	96789269	96809942	-	-
LS 250-200-305	MMG-G	4	45	225M	44.45	60	D224	99390300	96789269	96809942	-	-
LS 250-200-305	MMG-G	4	55	250M	44.45	65	D224	99390301	96789269	96809942	-	-
LS 250-200-305	MMG-G	4	75	280S	44.45	75	D250	99390302	96789274	96809943	-	-
LS 250-200-305	MMG-G	4	90	280M	44.45	75	D250	99390302	96789274	96809943	-	-
LS 250-200-381	Siemens	4	110	315S	44.45	80	D250	99390303	96789274	96809943	-	-
LS 250-200-381	Siemens	4	132	315M	44.45	80	D250	99390303	96789274	96809943	-	-
LS 250-200-381	Siemens	4	160	315L	44.45	80	D250	99390303	96789274	96809943	-	-
LS 250-200-381	Siemens	4	30	200L	44.45	55	D200	99390299	96789269	96809942	-	-
LS 250-200-381	Siemens	4	37	225S	44.45	60	D224	99390300	96789269	96809942	-	-
LS 250-200-381	Siemens	4	45	225M	44.45	60	D224	99390300	96789269	96809942	-	-
LS 250-200-381	Siemens	4	55	250M	44.45	65	D224	99390301	96789269	96809942	-	-
LS 250-200-381	Siemens	4	75	280S	44.45	75	D250	99390302	96789274	96809943	-	-
LS 250-200-381	Siemens	4	90	280M	44.45	75	D250	99390302	96789274	96809943	-	-
LS 250-200-381	MMG-G	4	110	315S	44.45	80	D250	99390303	96789274	96809943	-	-
LS 250-200-381	MMG-G	4	132	315M	44.45	80	D250	99390303	96789274	96809943	-	-
LS 250-200-381	MMG-G	4	160	315L	44.45	80	D250	99390303	96789274	96809943	-	-
LS 250-200-381	MMG-G	4	200	315L	44.45	80	D250	99390303	96789274	96809943	-	-

Pump type	Motor brand	Pole	Power [kW]	Frame size	Shaft diameter [mm]		Coupling type	Grundfos standard coupling, pin bush			Grid coupling	
					Pump	Motor		Kit No	Rubber	Bolts	Coupling complete	Assemble set
LS 250-200-381	MMG-G	4	250	315M	44.45	100	D250	99596707	96789274	96809943	-	-
LS 250-200-381	MMG-G	4	30	200L	44.45	55	D200	99390299	96789269	96809942	-	-
LS 250-200-381	MMG-G	4	37	225S	44.45	60	D224	99390300	96789269	96809942	-	-
LS 250-200-381	MMG-G	4	45	225M	44.45	60	D224	99390300	96789269	96809942	-	-
LS 250-200-381	MMG-G	4	55	250M	44.45	65	D224	99390301	96789269	96809942	-	-
LS 250-200-381	MMG-G	4	75	280S	44.45	75	D250	99390302	96789274	96809943	-	-
LS 250-200-381	MMG-G	4	90	280M	44.45	75	D250	99390302	96789274	96809943	-	-
LS 250-200-381	Siemens	6	11	160L	44.45	42	D180	99390309	96789247	96809941	-	-
LS 250-200-381	Siemens	6	15	180L	44.45	48	D200	99390298	96789269	96809942	-	-
LS 250-200-381	Siemens	6	18.5	200L	44.45	55	D200	99390299	96789269	96809942	-	-
LS 250-200-381	Siemens	6	22	200L	44.45	55	D200	99390299	96789269	96809942	-	-
LS 250-200-381	Siemens	6	30	225M	44.45	60	D224	99390300	96789269	96809942	-	-
LS 250-200-381	Siemens	6	37	250M	44.45	65	D224	99390301	96789269	96809942	-	-
LS 250-200-381	Siemens	6	45	280S	44.45	75	D250	99390302	96789274	96809943	-	-
LS 250-200-381	MMG-G	6	11	160L	44.45	42	D180	99390309	96789247	96809941	-	-
LS 250-200-381	MMG-G	6	15	180L	44.45	48	D200	99390298	96789269	96809942	-	-
LS 250-200-381	MMG-G	6	18.5	200L	44.45	55	D200	99390299	96789269	96809942	-	-
LS 250-200-381	MMG-G	6	22	200L	44.45	55	D200	99390299	96789269	96809942	-	-
LS 250-200-381	MMG-G	6	30	225M	44.45	60	D224	99390300	96789269	96809942	-	-
LS 250-200-381	MMG-G	6	37	250M	44.45	65	D224	99390301	96789269	96809942	-	-
LS 250-200-381	MMG-G	6	45	280S	44.45	75	D250	99390302	96789274	96809943	-	-
LS 250-200-381	MMG-G	6	55	280M	44.45	75	D250	99390302	96789274	96809943	-	-
LS 250-200-381	MMG-G	6	75	315S	44.45	80	D250	99390303	96789274	96809943	-	-
LS 300-200-489	Siemens	4	110	315S	63.5	80	D250	99390310	96789274	96809943	-	-
LS 300-200-489	Siemens	4	132	315M	63.5	80	D250	99390310	96789274	96809943	-	-
LS 300-200-489	Siemens	4	160	315L	63.5	80	D250	99390310	96789274	96809943	-	-
LS 300-200-489	Siemens	4	200	315L	63.5	80	D250	99390310	96789274	96809943	-	-
LS 300-200-489	Siemens	4	250	315L	63.5	85	D250	99390311	96789274	96809943	-	-
LS 300-200-489	Siemens	4	315	315L	63.5	85	GRID 90	-	-	-	99392578	99392618
LS 300-200-489	Siemens	4	355	355M	63.5	95	GRID 90	-	-	-	99392579	99392618
LS 300-200-489	MMG-G	4	110	315S	63.5	80	D250	99390310	96789274	96809943	-	-
LS 300-200-489	MMG-G	4	132	315M	63.5	80	D250	99390310	96789274	96809943	-	-
LS 300-200-489	MMG-G	4	160	315L	63.5	80	D250	99390310	96789274	96809943	-	-
LS 300-200-489	MMG-G	4	200	315L	63.5	80	D250	99390310	96789274	96809943	-	-
LS 300-200-489	MMG-G	4	250	315M	63.5	100	D250	99596708	96789274	96809943	-	-
LS 300-200-489	MMG-G	4	315	355L	63.5	100	GRID 110	-	-	-	99596709	99392619
LS 300-200-489	MMG-G	4	355	355C	63.5	100	GRID 110	-	-	-	99596709	99392619
LS 300-200-489	Siemens	6	110	315L	63.5	80	D250	99390310	96789274	96809943	-	-
LS 300-200-489	Siemens	6	37	250M	63.5	65	D224	99390319	96789269	96809942	-	-
LS 300-200-489	Siemens	6	45	280S	63.5	75	D250	99390320	96789274	96809943	-	-
LS 300-200-489	Siemens	6	55	280M	63.5	75	D250	99390320	96789274	96809943	-	-
LS 300-200-489	Siemens	6	75	315S	63.5	80	D250	99390310	96789274	96809943	-	-
LS 300-200-489	Siemens	6	90	315M	63.5	80	D250	99390310	96789274	96809943	-	-
LS 300-200-489	MMG-G	6	110	315L	63.5	80	D250	99390310	96789274	96809943	-	-
LS 300-200-489	MMG-G	6	132	315L	63.5	80	D250	99390310	96789274	96809943	-	-
LS 300-200-489	MMG-G	6	160	355M	63.5	100	D250	99596708	96789274	96809943	-	-
LS 300-200-489	MMG-G	6	200	355M	63.5	100	GRID 110	-	-	-	99596709	99392619
LS 300-200-489	MMG-G	6	37	250M	63.5	65	D224	99390319	96789269	96809942	-	-
LS 300-200-489	MMG-G	6	45	280S	63.5	75	D250	99390320	96789274	96809943	-	-
LS 300-200-489	MMG-G	6	55	280M	63.5	75	D250	99390320	96789274	96809943	-	-
LS 300-200-489	MMG-G	6	75	315S	63.5	80	D250	99390310	96789274	96809943	-	-
LS 300-200-489	MMG-G	6	90	315M	63.5	80	D250	99390310	96789274	96809943	-	-

Pump type	Motor brand	Pole	Power [kW]	Frame size	Shaft diameter [mm]		Coupling type	Grundfos standard coupling, pin bush			Grid coupling	
					Pump	Motor		Kit No	Rubber	Bolts	Coupling complete	Assemble set
LS 300-200-489	MMG-G	6	185	355M	63.5	100	GRID 110	-	-	-	*99596709*	*99392619*
LS 300-250-305	Siemens	4	30	200L	44.45	55	D200	*99390299*	*96789269*	*96809942*	-	-
LS 300-250-305	Siemens	4	37	225S	44.45	60	D224	*99390300*	*96789269*	*96809942*	-	-
LS 300-250-305	Siemens	4	45	225M	44.45	60	D224	*99390300*	*96789269*	*96809942*	-	-
LS 300-250-305	Siemens	4	55	250M	44.45	65	D224	*99390301*	*96789269*	*96809942*	-	-
LS 300-250-305	Siemens	4	75	280S	44.45	75	D250	*99390302*	*96789274*	*96809943*	-	-
LS 300-250-305	Siemens	4	90	280M	44.45	75	D250	*99390302*	*96789274*	*96809943*	-	-
LS 300-250-305	MMG-G	4	110	315S	44.45	80	D250	*99390303*	*96789274*	*96809943*	-	-
LS 300-250-305	MMG-G	4	132	315M	44.45	80	D250	*99390303*	*96789274*	*96809943*	-	-
LS 300-250-305	MMG-G	4	160	315L	44.45	80	D250	*99390303*	*96789274*	*96809943*	-	-
LS 300-250-305	MMG-G	4	30	200L	44.45	55	D200	*99390299*	*96789269*	*96809942*	-	-
LS 300-250-305	MMG-G	4	37	225S	44.45	60	D224	*99390300*	*96789269*	*96809942*	-	-
LS 300-250-305	MMG-G	4	45	225M	44.45	60	D224	*99390300*	*96789269*	*96809942*	-	-
LS 300-250-305	MMG-G	4	55	250M	44.45	65	D224	*99390301*	*96789269*	*96809942*	-	-
LS 300-250-305	MMG-G	4	75	280S	44.45	75	D250	*99390302*	*96789274*	*96809943*	-	-
LS 300-250-305	MMG-G	4	90	280M	44.45	75	D250	*99390302*	*96789274*	*96809943*	-	-
LS 300-250-305	Siemens	6	11	160L	44.45	42	D180	*99390309*	*96789247*	*96809941*	-	-
LS 300-250-305	Siemens	6	15	180L	44.45	48	D200	*99390298*	*96789269*	*96809942*	-	-
LS 300-250-305	Siemens	6	18.5	200L	44.45	55	D200	*99390299*	*96789269*	*96809942*	-	-
LS 300-250-305	Siemens	6	22	200L	44.45	55	D200	*99390299*	*96789269*	*96809942*	-	-
LS 300-250-305	Siemens	6	30	225M	44.45	60	D224	*99390300*	*96789269*	*96809942*	-	-
LS 300-250-305	MMG-G	6	11	160L	44.45	42	D180	*99390309*	*96789247*	*96809941*	-	-
LS 300-250-305	MMG-G	6	15	180L	44.45	48	D200	*99390298*	*96789269*	*96809942*	-	-
LS 300-250-305	MMG-G	6	18.5	200L	44.45	55	D200	*99390299*	*96789269*	*96809942*	-	-
LS 300-250-305	MMG-G	6	22	200L	44.45	55	D200	*99390299*	*96789269*	*96809942*	-	-
LS 300-250-305	MMG-G	6	30	225M	44.45	60	D224	*99390300*	*96789269*	*96809942*	-	-
LS 300-250-305	MMG-G	6	37	250M	44.45	65	D224	*99390301*	*96789269*	*96809942*	-	-
LS 300-250-305	MMG-G	6	45	280S	44.45	75	D250	*99390302*	*96789274*	*96809943*	-	-
LS 300-250-381	Siemens	4	110	315S	57.15	80	D250	*99390314*	*96789274*	*96809943*	-	-
LS 300-250-381	Siemens	4	132	315M	57.15	80	D250	*99390314*	*96789274*	*96809943*	-	-
LS 300-250-381	Siemens	4	160	315L	57.15	80	D250	*99390314*	*96789274*	*96809943*	-	-
LS 300-250-381	Siemens	4	200	315L	57.15	80	D250	*99390314*	*96789274*	*96809943*	-	-
LS 300-250-381	Siemens	4	55	250M	57.15	65	D224	*99390312*	*96789269*	*96809942*	-	-
LS 300-250-381	Siemens	4	75	280S	57.15	75	D250	*99390313*	*96789274*	*96809943*	-	-
LS 300-250-381	Siemens	4	90	280M	57.15	75	D250	*99390313*	*96789274*	*96809943*	-	-
LS 300-250-381	MMG-G	4	110	315S	57.15	80	D250	*99390314*	*96789274*	*96809943*	-	-
LS 300-250-381	MMG-G	4	132	315M	57.15	80	D250	*99390314*	*96789274*	*96809943*	-	-
LS 300-250-381	MMG-G	4	160	315L	57.15	80	D250	*99390314*	*96789274*	*96809943*	-	-
LS 300-250-381	MMG-G	4	200	315L	57.15	80	D250	*99390314*	*96789274*	*96809943*	-	-
LS 300-250-381	MMG-G	4	250	315M	57.15	100	D250	*99596710*	*96789274*	*96809943*	-	-
LS 300-250-381	MMG-G	4	315	355L	57.15	100	GRID 110	-	-	-	*99596711*	*99392619*
LS 300-250-381	MMG-G	4	55	250M	57.15	65	D224	*99390312*	*96789269*	*96809942*	-	-
LS 300-250-381	MMG-G	4	75	280S	57.15	75	D250	*99390313*	*96789274*	*96809943*	-	-
LS 300-250-381	MMG-G	4	90	280M	57.15	75	D250	*99390313*	*96789274*	*96809943*	-	-
LS 300-250-381	Siemens	6	18.5	200L	57.15	55	D200	*99390321*	*96789269*	*96809942*	-	-
LS 300-250-381	Siemens	6	22	200L	57.15	55	D200	*99390321*	*96789269*	*96809942*	-	-
LS 300-250-381	Siemens	6	30	225M	57.15	60	D224	*99390322*	*96789269*	*96809942*	-	-
LS 300-250-381	Siemens	6	37	250M	57.15	65	D224	*99390312*	*96789269*	*96809942*	-	-
LS 300-250-381	Siemens	6	45	280S	57.15	75	D250	*99390313*	*96789274*	*96809943*	-	-
LS 300-250-381	Siemens	6	55	280M	57.15	75	D250	*99390313*	*96789274*	*96809943*	-	-
LS 300-250-381	MMG-G	6	18.5	200L	57.15	55	D200	*99390321*	*96789269*	*96809942*	-	-
LS 300-250-381	MMG-G	6	22	200L	57.15	55	D200	*99390321*	*96789269*	*96809942*	-	-

Pump type	Motor brand	Pole	Power [kW]	Frame size	Shaft diameter [mm]		Coupling type	Grundfos standard coupling, pin bush			Grid coupling	
					Pump	Motor		Kit No	Rubber	Bolts	Coupling complete	Assemble set
LS 300-250-381	MMG-G	6	30	225M	57.15	60	D224	99390322	96789269	96809942	-	-
LS 300-250-381	MMG-G	6	37	250M	57.15	65	D224	99390312	96789269	96809942	-	-
LS 300-250-381	MMG-G	6	45	280S	57.15	75	D250	99390313	96789274	96809943	-	-
LS 300-250-381	MMG-G	6	55	280M	57.15	75	D250	99390313	96789274	96809943	-	-
LS 300-250-381	MMG-G	6	75	315S	57.15	80	D250	99390314	96789274	96809943	-	-
LS 300-250-381	MMG-G	6	90	315M	57.15	80	D250	99390314	96789274	96809943	-	-
LS 300-250-381	MMG-G	6	110	315L	57.15	80	D250	99390314	96789274	96809943	-	-
LS 350-250-498	Siemens	4	160	315L	79.38	80	D250	99390315	96789274	96809943	-	-
LS 350-250-498	Siemens	4	200	315L	79.38	80	D250	99390315	96789274	96809943	-	-
LS 350-250-498	Siemens	4	250	315L	79.38	85	D250	99390316	96789274	96809943	-	-
LS 350-250-498	Siemens	4	315	315L	79.38	85	GRID 90	-	-	-	99392591	99392618
LS 350-250-498	Siemens	4	355	355M	79.38	95	GRID 90	-	-	-	99392584	99392618
LS 350-250-498	Siemens	4	400	355M	79.38	95	GRID 90	-	-	-	99392584	99392618
LS 350-250-498	Siemens	4	500	355M	79.38	95	GRID 90	-	-	-	99392584	99392618
LS 350-250-498	MMG-G	4	160	315L	79.38	80	D250	99390315	96789274	96809943	-	-
LS 350-250-498	MMG-G	4	200	315L	79.38	80	D250	99390315	96789274	96809943	-	-
LS 350-250-498	MMG-G	4	250	315M	79.38	100	D250	99596712	96789274	96809943	-	-
LS 350-250-498	MMG-G	4	315	355L	79.38	100	GRID 110	-	-	-	99596713	99392619
LS 350-250-498	MMG-G	4	355	355C	79.38	100	GRID 110	-	-	-	99596713	99392619
LS 350-250-498	MMG-G	4	400	315DB	79.38	95	GRID 90	-	-	-	99392584	99392618
LS 350-250-498	MMG-G	4	450	355CB	79.38	95	GRID 90	-	-	-	99392584	99392618
LS 350-250-498	MMG-G	4	500	355CB	79.38	95	GRID 90	-	-	-	99392584	99392618
LS 350-250-498	MMG-G	4	425	355CB	79.38	95	GRID 90	-	-	-	99392584	99392618
LS 350-250-498	MMG-G	4	475	355CB	79.38	95	GRID 90	-	-	-	99392584	99392618
LS 350-250-498	Siemens	6	110	315L	79.38	80	D250	99390315	96789274	96809943	-	-
LS 350-250-498	Siemens	6	132	315L	79.38	80	D250	99390315	96789274	96809943	-	-
LS 350-250-498	Siemens	6	200	315L	79.38	85	GRID 90	-	-	-	99392591	99392618
LS 350-250-498	Siemens	6	45	280S	79.38	75	D250	99390323	96789274	96809943	-	-
LS 350-250-498	Siemens	6	55	280M	79.38	75	D250	99390323	96789274	96809943	-	-
LS 350-250-498	Siemens	6	75	315S	79.38	80	D250	99390315	96789274	96809943	-	-
LS 350-250-498	Siemens	6	90	315M	79.38	80	D250	99390315	96789274	96809943	-	-
LS 350-250-498	MMG-G	6	110	315L	79.38	80	D250	99390315	96789274	96809943	-	-
LS 350-250-498	MMG-G	6	132	315L	79.38	80	D250	99390315	96789274	96809943	-	-
LS 350-250-498	MMG-G	6	160	355M	79.38	100	D250	99596712	96789274	96809943	-	-
LS 350-250-498	MMG-G	6	200	355M	79.38	100	GRID 110	-	-	-	99596713	99392619
LS 350-250-498	MMG-G	6	220	355M	79.38	100	GRID 110	-	-	-	99596713	99392619
LS 350-250-498	MMG-G	6	250	355L	79.38	100	GRID 110	-	-	-	99596713	99392619
LS 350-250-498	MMG-G	6	45	280S	79.38	75	D250	99390323	96789274	96809943	-	-
LS 350-250-498	MMG-G	6	55	280M	79.38	75	D250	99390323	96789274	96809943	-	-
LS 350-250-498	MMG-G	6	75	315S	79.38	80	D250	99390315	96789274	96809943	-	-
LS 350-250-498	MMG-G	6	90	315M	79.38	80	D250	99390315	96789274	96809943	-	-
LS 350-250-498	MMG-G	6	185	355M	79.38	100	GRID 110	-	-	-	99596713	99392619
LS 350-250-630	Siemens	4	250	315L	79.38	85	D250	99390316	96789274	96809943	-	-
LS 350-250-630	Siemens	4	315	315L	79.38	85	GRID 90	-	-	-	99392591	99392618
LS 350-250-630	Siemens	4	355	355M	79.38	95	GRID 90	-	-	-	99392584	99392618
LS 350-250-630	Siemens	4	400	355M	79.38	95	GRID 90	-	-	-	99392584	99392618
LS 350-250-630	Siemens	4	500	355M	79.38	95	GRID 90	-	-	-	99392584	99392618
LS 350-250-630	Siemens	4	560	400	79.38	110	GRID 110	-	-	-	99392585	99392619
LS 350-250-630	Siemens	4	630	400	79.38	110	GRID 110	-	-	-	99392585	99392619
LS 350-250-630	MMG-G	4	250	315M	79.38	100	D250	99596712	96789274	96809943	-	-
LS 350-250-630	MMG-G	4	315	355L	79.38	100	GRID 110	-	-	-	99596713	99392619
LS 350-250-630	MMG-G	4	355	355C	79.38	100	GRID 110	-	-	-	99596713	99392619

Pump type	Motor brand	Pole	Power [kW]	Frame size	Shaft diameter [mm]		Coupling type	Grundfos standard coupling, pin bush			Grid coupling	
					Pump	Motor		Kit No	Rubber	Bolts	Coupling complete	Assemble set
LS 350-250-630	MMG-G	4	400	315DB	79.38	95	GRID 90	-	-	-	99392584	99392618
LS 350-250-630	MMG-G	4	450	355CB	79.38	95	GRID 90	-	-	-	99392584	99392618
LS 350-250-630	MMG-G	4	500	355CB	79.38	95	GRID 90	-	-	-	99392584	99392618
LS 350-250-630	MMG-G	4	560	400CB	79.38	110	GRID 110	-	-	-	99392585	99392619
LS 350-250-630	MMG-G	4	600	400CB	79.38	110	GRID 110	-	-	-	99392585	99392619
LS 350-250-630	MMG-G	4	530	355CB	79.38	95	GRID 90	-	-	-	99392584	99392618
LS 350-250-630	MMG-G	4	425	355CB	79.38	95	GRID 90	-	-	-	99392584	99392618
LS 350-250-630	MMG-G	4	475	355CB	79.38	95	GRID 90	-	-	-	99392584	99392618
LS 350-250-630	Siemens	6	110	315L	79.38	80	D250	99390315	96789274	96809943	-	-
LS 350-250-630	Siemens	6	132	315L	79.38	80	D250	99390315	96789274	96809943	-	-
LS 350-250-630	Siemens	6	160	315L	79.38	80	D250	99390315	96789274	96809943	-	-
LS 350-250-630	Siemens	6	200	315L	79.38	85	GRID 90	-	-	-	99392591	99392618
LS 350-250-630	Siemens	6	250	315L	79.38	85	GRID 90	-	-	-	99392591	99392618
LS 350-250-630	Siemens	6	315	355M	79.38	95	GRID 90	-	-	-	99392584	99392618
LS 350-250-630	Siemens	6	75	315S	79.38	80	D250	99390315	96789274	96809943	-	-
LS 350-250-630	Siemens	6	90	315M	79.38	80	D250	99390315	96789274	96809943	-	-
LS 350-250-630	MMG-G	6	110	315L	79.38	80	D250	99390315	96789274	96809943	-	-
LS 350-250-630	MMG-G	6	132	315L	79.38	80	D250	99390315	96789274	96809943	-	-
LS 350-250-630	MMG-G	6	160	355M	79.38	100	D250	99596712	96789274	96809943	-	-
LS 350-250-630	MMG-G	6	200	355M	79.38	100	GRID 110	-	-	-	99596713	99392619
LS 350-250-630	MMG-G	6	220	355M	79.38	100	GRID 110	-	-	-	99596713	99392619
LS 350-250-630	MMG-G	6	250	355L	79.38	100	GRID 110	-	-	-	99596713	99392619
LS 350-250-630	MMG-G	6	300	355C	79.38	100	GRID 110	-	-	-	99596713	99392619
LS 350-250-630	MMG-G	6	75	315S	79.38	80	D250	99390315	96789274	96809943	-	-
LS 350-250-630	MMG-G	6	90	315M	79.38	80	D250	99390315	96789274	96809943	-	-
LS 350-250-630	MMG-G	6	185	355M	79.38	100	GRID 110	-	-	-	99596713	99392619
LS 350-300-508	Siemens	6	110	315L	63.5	80	D250	99390310	96789274	96809943	-	-
LS 350-300-508	Siemens	6	132	315L	63.5	80	D250	99390310	96789274	96809943	-	-
LS 350-300-508	Siemens	6	160	315L	63.5	80	D250	99390310	96789274	96809943	-	-
LS 350-300-508	Siemens	6	200	315L	63.5	80	GRID 80	-	-	-	99392587	99392617
LS 350-300-508	Siemens	6	55	280M	63.5	75	D250	99390320	96789274	96809943	-	-
LS 350-300-508	Siemens	6	75	315S	63.5	80	D250	99390310	96789274	96809943	-	-
LS 350-300-508	Siemens	6	90	315M	63.5	80	D250	99390310	96789274	96809943	-	-
LS 350-300-508	MMG-G	6	110	315L	63.5	80	D250	99390310	96789274	96809943	-	-
LS 350-300-508	MMG-G	6	132	315L	63.5	80	D250	99390310	96789274	96809943	-	-
LS 350-300-508	MMG-G	6	160	355M	63.5	100	D250	99596708	96789274	96809943	-	-
LS 350-300-508	MMG-G	6	200	355M	63.5	100	GRID 110	-	-	-	99596709	99392619
LS 350-300-508	MMG-G	6	220	355M	63.5	100	GRID 110	-	-	-	99596709	99392619
LS 350-300-508	MMG-G	6	250	355L	63.5	100	GRID 110	-	-	-	99596709	99392619
LS 350-300-508	MMG-G	6	300	355C	63.5	100	GRID 110	-	-	-	99596709	99392619
LS 350-300-508	MMG-G	6	55	280M	63.5	75	D250	99390320	96789274	96809943	-	-
LS 350-300-508	MMG-G	6	75	315S	63.5	80	D250	99390310	96789274	96809943	-	-
LS 350-300-508	MMG-G	6	90	315M	63.5	80	D250	99390310	96789274	96809943	-	-
LS 350-300-508	MMG-G	6	185	355M	63.5	100	GRID 110	-	-	-	99596709	99392619
LS 450-350-397	Siemens	4	110	315S	63.5	80	D250	99390310	96789274	96809943	-	-
LS 450-350-397	Siemens	4	132	315M	63.5	80	D250	99390310	96789274	96809943	-	-
LS 450-350-397	Siemens	4	160	315L	63.5	80	D250	99390310	96789274	96809943	-	-
LS 450-350-397	Siemens	4	200	315L	63.5	80	D250	99390310	96789274	96809943	-	-
LS 450-350-397	Siemens	4	250	315L	63.5	85	D250	99390311	96789274	96809943	-	-
LS 450-350-397	MMG-G	4	110	315S	63.5	80	D250	99390310	96789274	96809943	-	-
LS 450-350-397	MMG-G	4	132	315M	63.5	80	D250	99390310	96789274	96809943	-	-
LS 450-350-397	MMG-G	4	160	315L	63.5	80	D250	99390310	96789274	96809943	-	-

Pump type	Motor brand	Pole	Power [kW]	Frame size	Shaft diameter [mm]		Coupling type	Grundfos standard coupling, pin bush			Grid coupling	
					Pump	Motor		Kit No	Rubber	Bolts	Coupling complete	Assemble set
LS 450-350-397	MMG-G	4	200	315L	63.5	80	D250	*99390310*	*96789274*	*96809943*	-	-
LS 450-350-397	MMG-G	4	250	315M	63.5	100	D250	*99596708*	*96789274*	*96809943*	-	-
LS 450-350-397	MMG-G	4	315	355L	63.5	100	GRID 110	-	-	-	*99596709*	*99392619*
LS 450-350-397	MMG-G	4	355	355C	63.5	100	GRID 110	-	-	-	*99596709*	*99392619*
LS 450-350-397	Siemens	6	37	250M	63.5	65	D224	*99390319*	*96789269*	*96809942*	-	-
LS 450-350-397	Siemens	6	45	280S	63.5	75	D250	*99390320*	*96789274*	*96809943*	-	-
LS 450-350-397	Siemens	6	55	280M	63.5	75	D250	*99390320*	*96789274*	*96809943*	-	-
LS 450-350-397	Siemens	6	75	315S	63.5	80	D250	*99390310*	*96789274*	*96809943*	-	-
LS 450-350-397	MMG-G	6	110	315L	63.5	80	D250	*99390310*	*96789274*	*96809943*	-	-
LS 450-350-397	MMG-G	6	37	250M	63.5	65	D224	*99390319*	*96789269*	*96809942*	-	-
LS 450-350-397	MMG-G	6	45	280S	63.5	75	D250	*99390320*	*96789274*	*96809943*	-	-
LS 450-350-397	MMG-G	6	55	280M	63.5	75	D250	*99390320*	*96789274*	*96809943*	-	-
LS 450-350-397	MMG-G	6	75	315S	63.5	80	D250	*99390310*	*96789274*	*96809943*	-	-
LS 450-350-397	MMG-G	6	90	315M	63.5	80	D250	*99390310*	*96789274*	*96809943*	-	-

LS 65-50-241, LS 65-50-330, LS 100-80-241

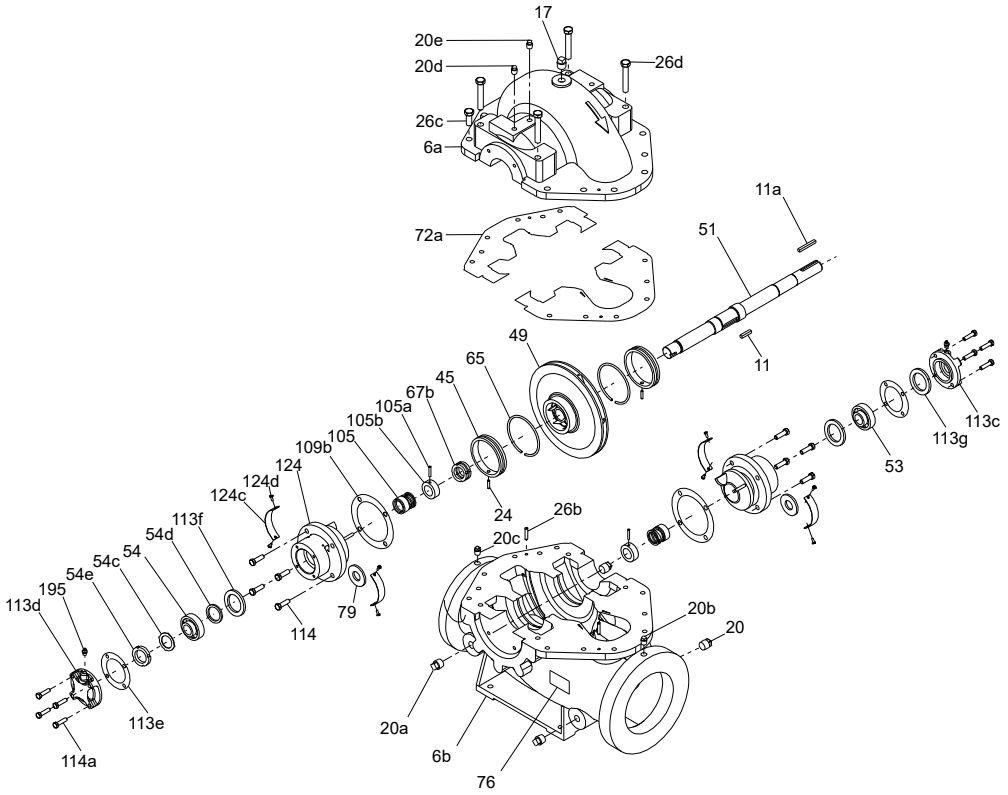

TM069403

LS 100-80-356

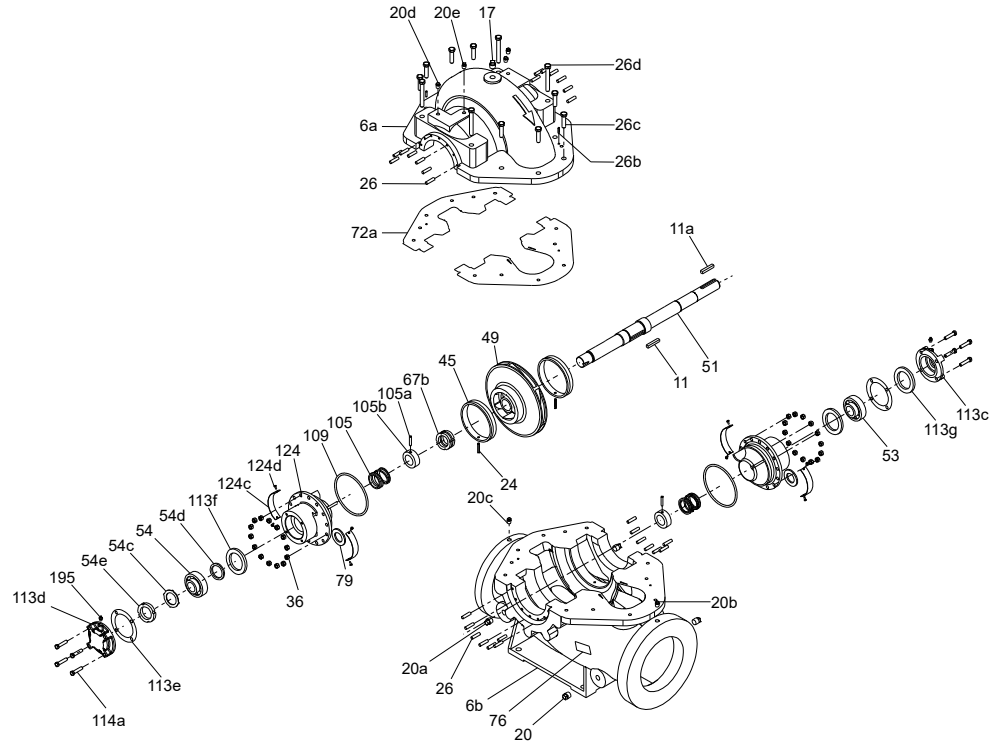

TM069405

LS 125-100-279, LS 125-100-305

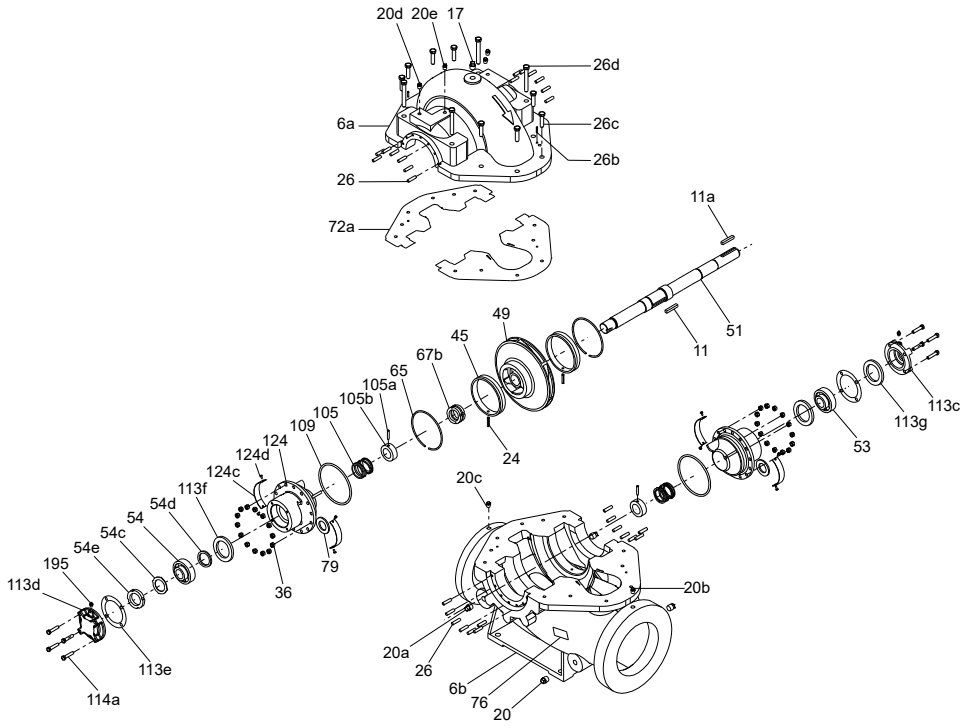

TM069406

LS 125-100-381

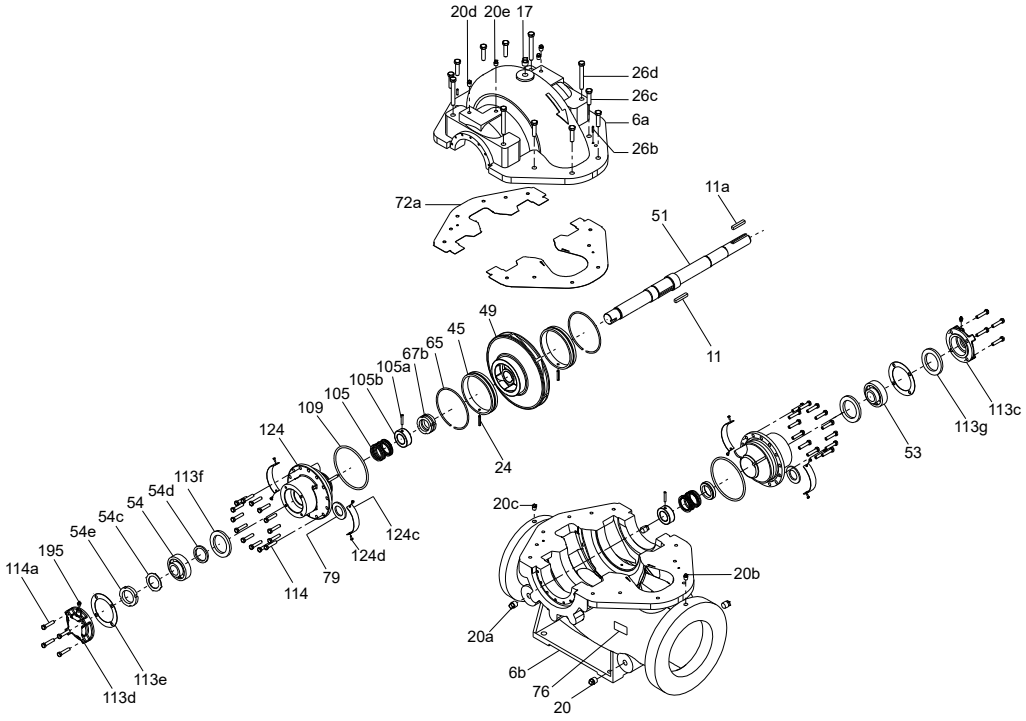

TM069404

LS 150-125-305, LS 150-125-381, LS 200-150-305

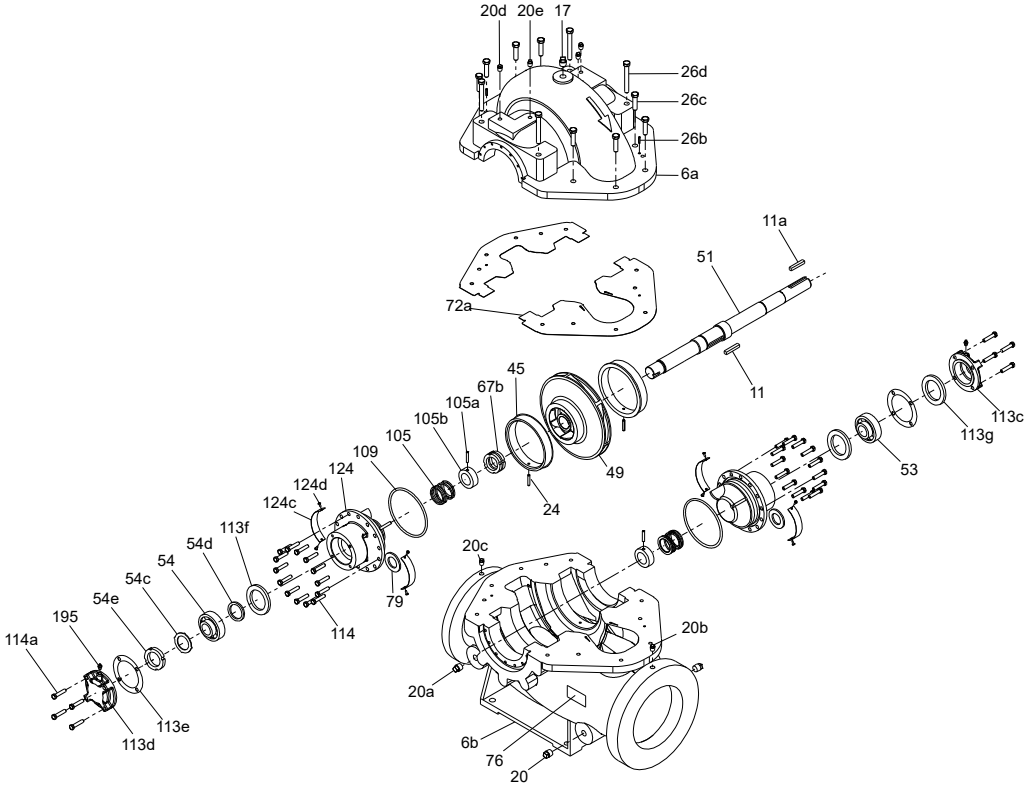

LS 200-150-483

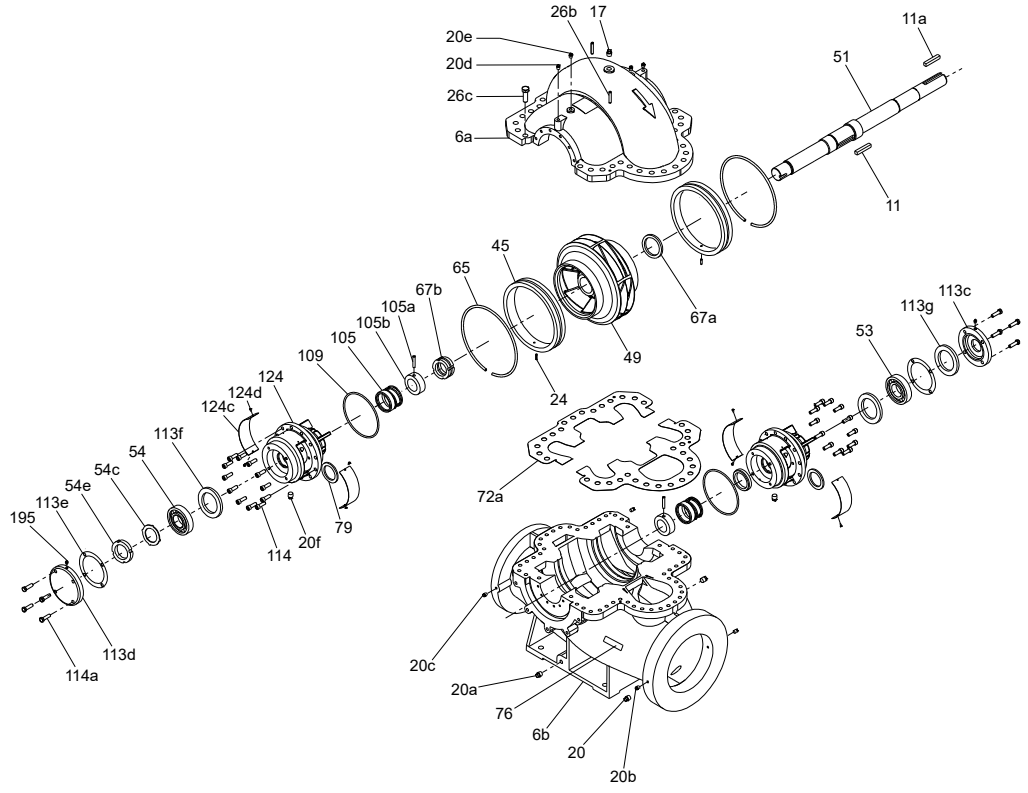

LS 200-150-381, LS 250-200-305, LS 250-200-381, LS 300-250-305

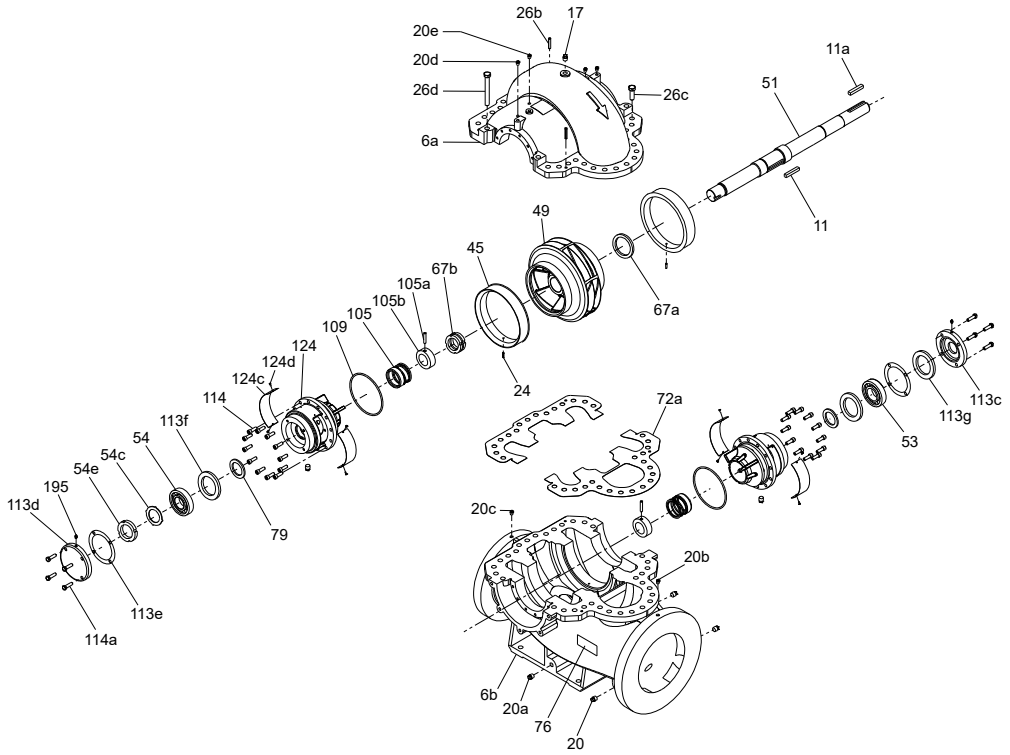

TM069409

LS 300-250-381

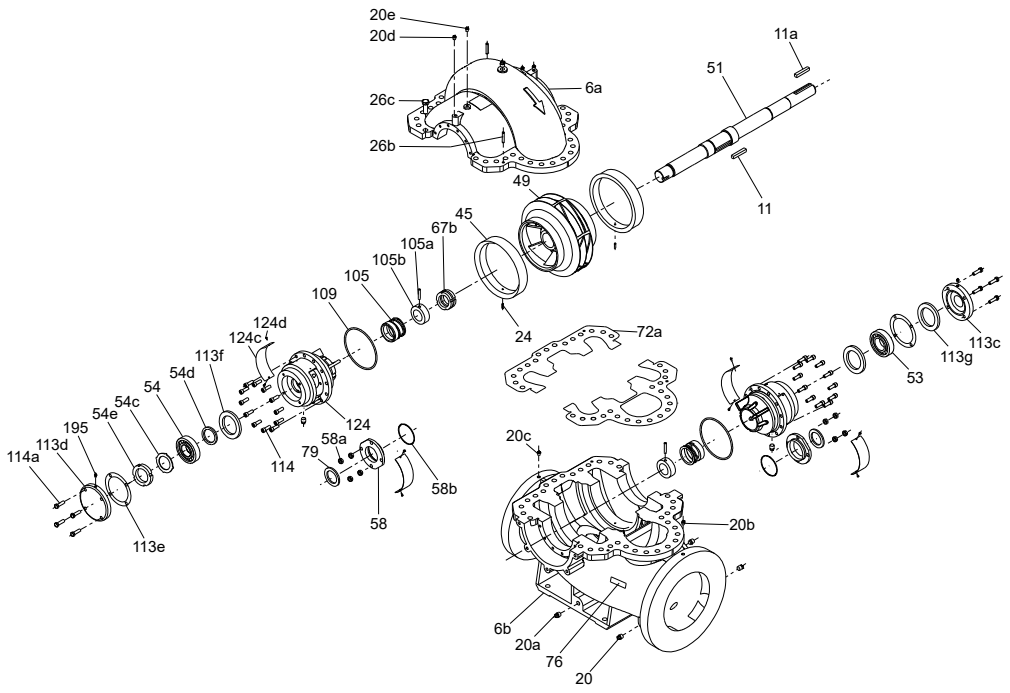

TM069410

LS 350-250-498

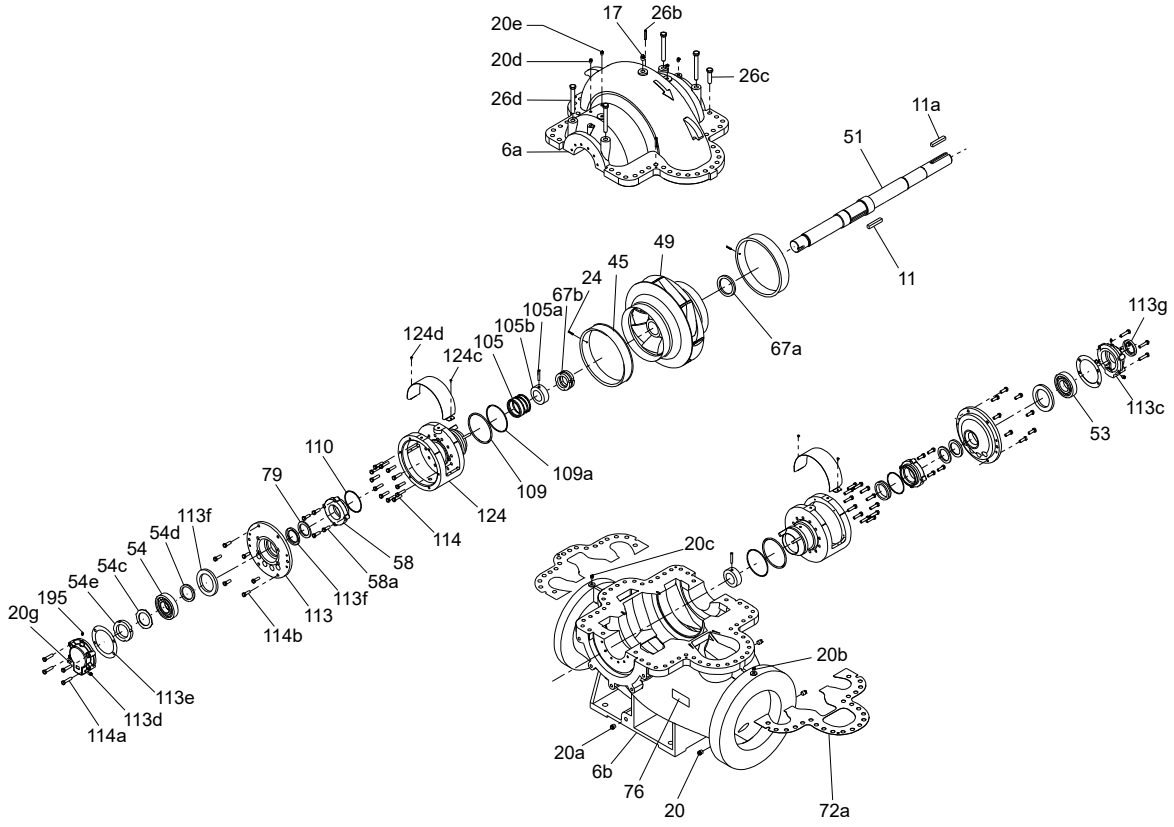

TM069414

LS 450-350-397

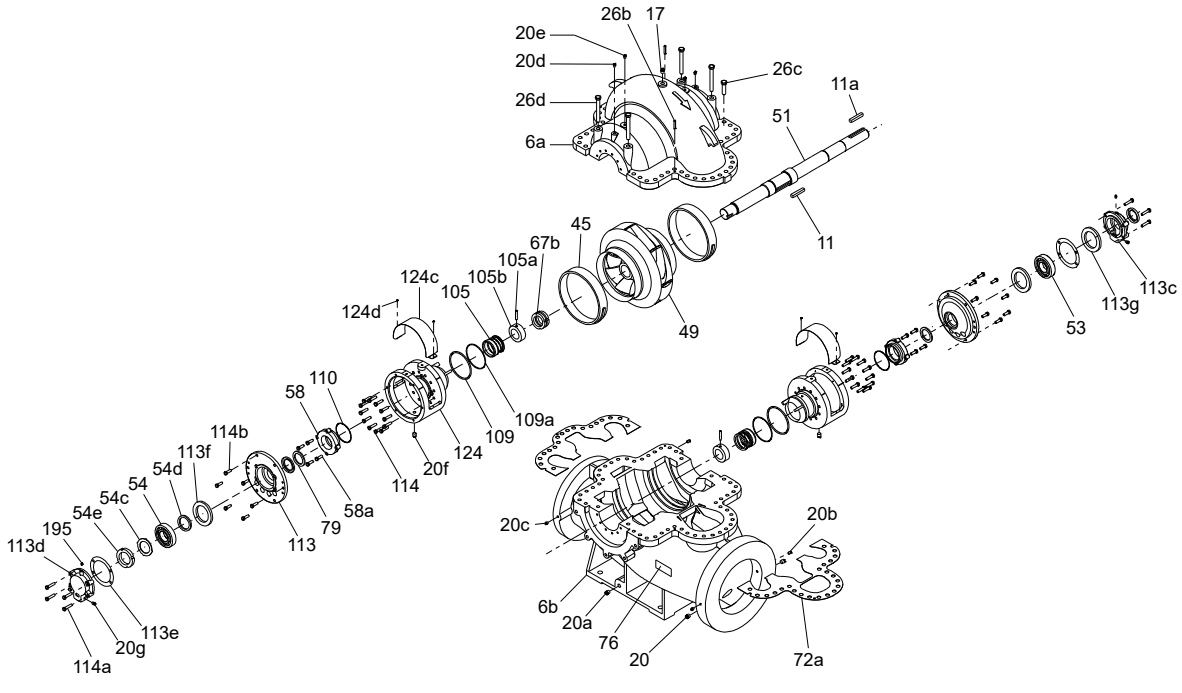

TM069416

LS 200-150-483 X6

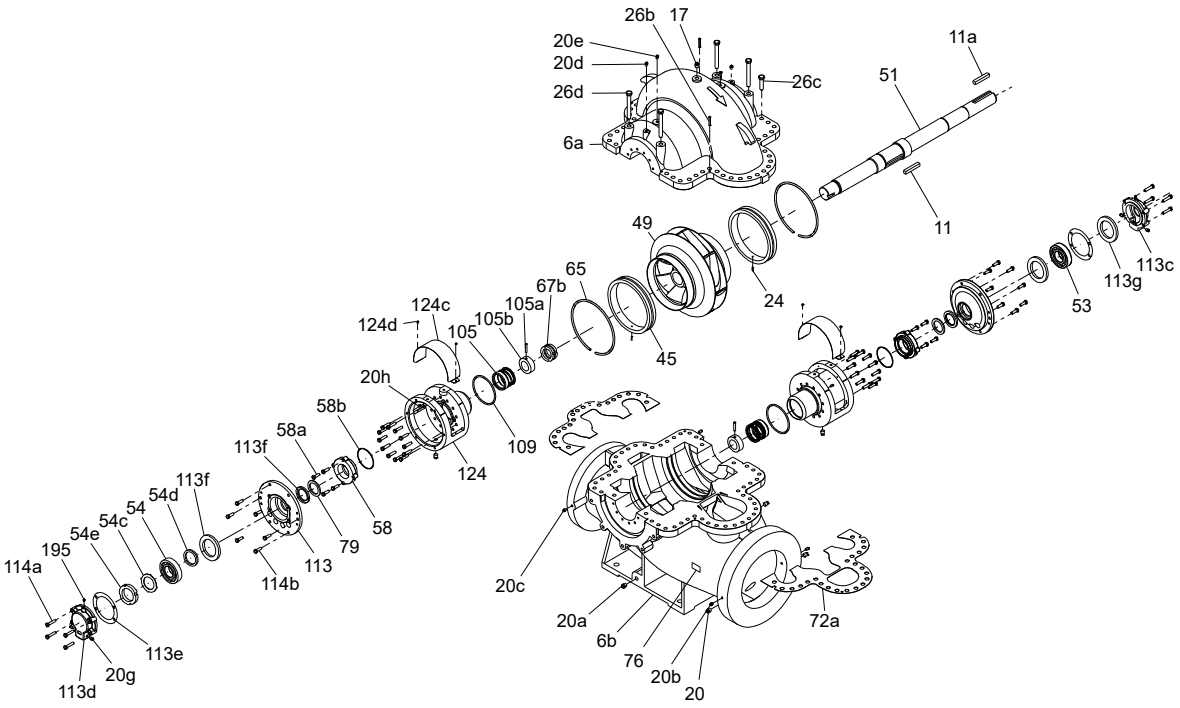

TM069411

LS 200-150-508

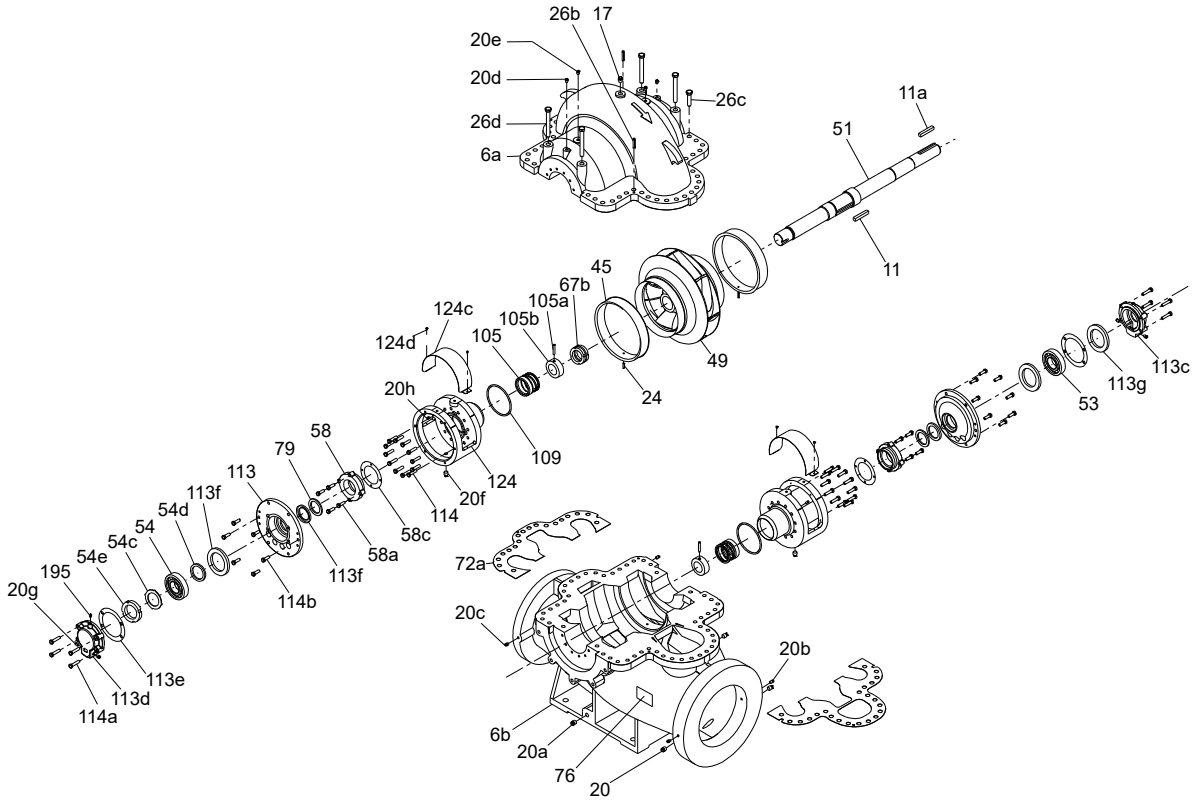

TM069412

LS 350-250-630

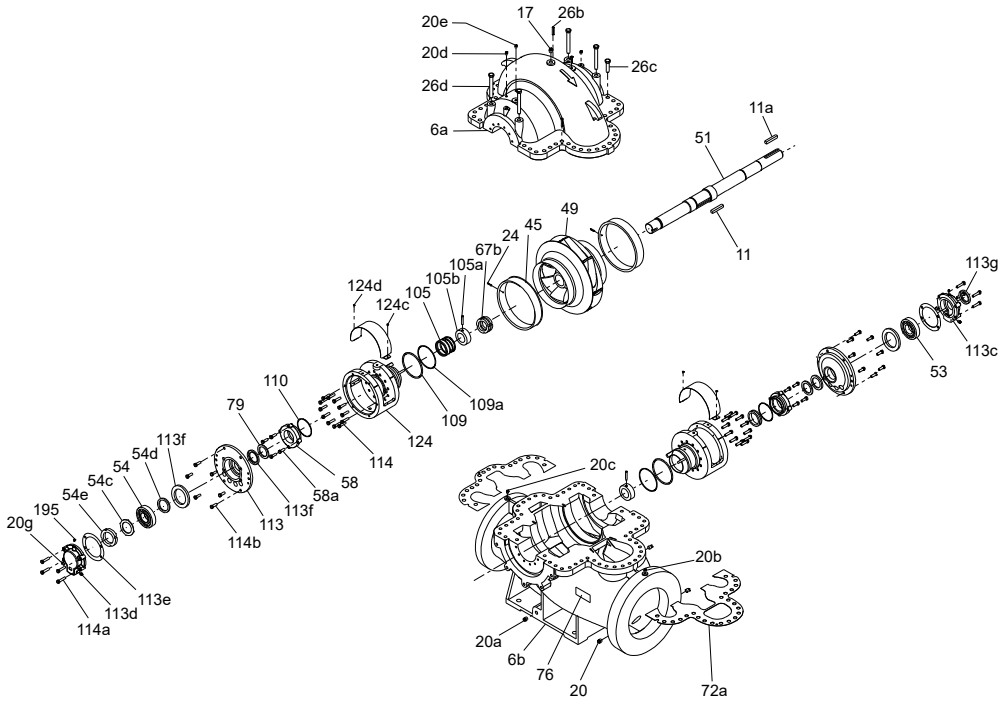

TM069415

LS 300-200-489, LS 350-300-508

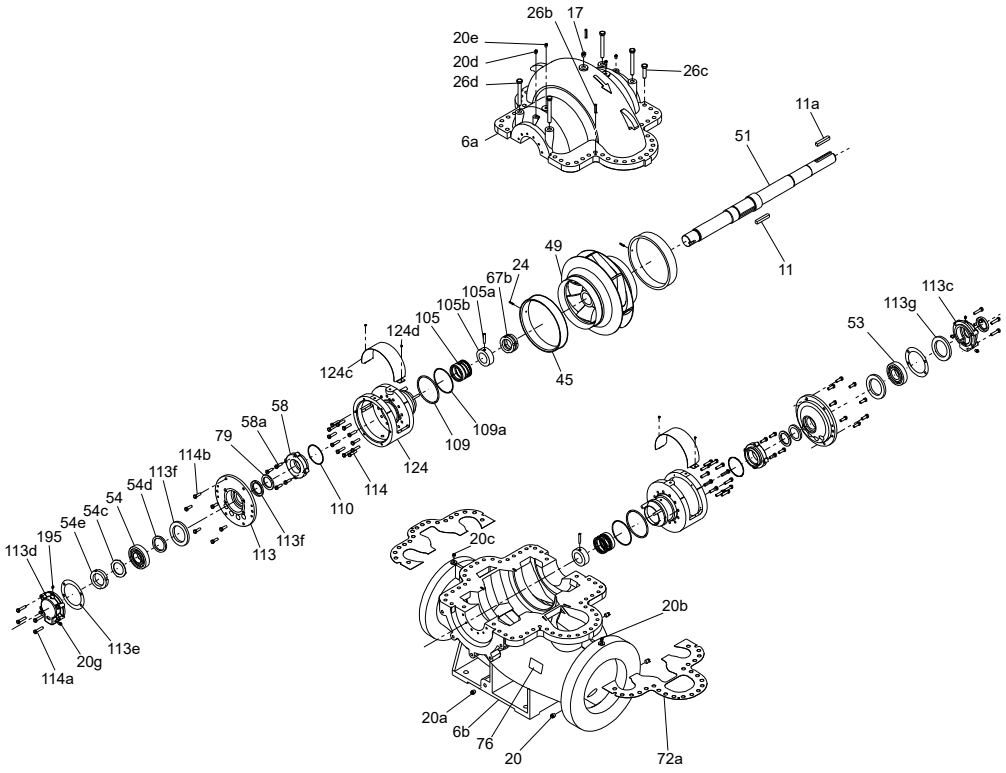

TM069413

LS, double-stage

Impeller

The kit consists of impeller (pos. 49) and key (pos. 11 and 11a).

Description	Kit No	
	Impeller, first-stage	Impeller, second-stage
LS 125-100-370x2	*97781580*	*97781601*
LS 150-125-415x2	*97781602*	*97781603*
LS 200-150-475x2	*97781604*	*97781605*
LS 250-200-575x2	*97781606*	*97781607*

Bearing

Pos.	Description	LS 125-100-370x2	LS 150-125-415x2	LS 200-150-475x2	LS 250-200-575x2
	Kit No	*99516129*	*99516131*	*99516132*	*99516143*
53	Bearing	1	1	1	1
54	Bearing	1	1	1	1
113e	Gasket	2	2	2	2
79	Slinger	2	2	2	2
113f	Lip seal	2	2	2	2
113f	Lip seal	-	-	-	1
66	O-ring	-	-	-	2
110	O-ring	-	-	-	2
109	O-ring	2	2	2	2
54c	Tab washer	1	1	1	1
54e	Round nut	1	1	1	1
123	Washer	1	1	1	1

Gasket

Pos.	Description	LS 125-100-370x2	LS 150-125-415x2	LS 200-150-475x2	LS 250-200-575x2
	Kit No	*99516129*	*99516131*	*99516132*	*99516143*
72a	Gasket case	1	1	1	1
113e	Gasket	2	2	2	2
79	Slinger	2	2	2	2
66	O-ring	-	-	-	2
110	O-ring	-	-	-	2
109	O-ring	2	2	2	2

Shaft seal

Pos.	Description	LS 125-100-370x2	LS 150-125-415x2	LS 200-150-475x2	LS 250-200-575x2
	Kit No	*99515934*	*99515935*	*99515936*	*99515937*
105	Shaft seal	2	2	2	2
105	Shaft seal	-	-	-	2
113e	Gasket	2	2	2	2
79	Slinger	2	2	2	2
113f	Lip seal	2	2	2	2
113f	Lip seal	-	-	-	1
66	O-ring	-	-	-	2
110	O-ring	-	-	-	2
109	O-ring	2	2	2	2
54c	Tab washer	1	1	1	1
54e	Round nut	1	1	1	1
123	Washer	1	1	1	1

Wear ring

Pos.	Description	LS 125-100-370x2	LS 150-125-415x2	LS 200-150-475x2	LS 250-200-575x2
	Kit No	*97771928*	*97771929*	*97771930*	*99516128*
45	Wear ring	2	2	2	2
45	Wear ring	1	1	1	1
24	Pin spring	3	3	1	1

Shaft

The kit consists of shaft (pos. 51) and key (pos. 11 and 11a).

Description	Kit No	
	Clockwise	Counterclockwise
LS 125-100-370x2	*99516148*	99516152
LS 150-125-415x2	*99516149*	99516153
LS 200-150-475x2	*99516150*	99516154
LS 250-200-575x2	*99516151*	99516155

Hardware

Pos.	Description	LS 125-100-370x2	LS 150-125-415x2	LS 200-150-475x2	LS 250-200-575x2
	Kit No	*99516156*	*99516157*	*99516158*	*99516159*
26b	Roll pin	4	4	4	4
26c	Cap screw	23	32	35	42
26c	Hex head cap screw	5	-	-	-
26c	Cap screw	4	4	5	4
58a	Cap screw	-	-	-	8
114	He head cap screw	28	28	24	28
114a	Cap screw	8	8	8	8
114b	Cap screw	-	-	-	12
26b	Pin taper	3	-	-	-
	Nut	3	-	-	-
	Cap screw	-	-	1	-

Sleeve

Pos.	Description	LS 125-100-370x2	LS 150-125-415x2	LS 200-150-475x2	LS 250-200-575x2
	Kit No	*99516160*	*99516161*	*99516162*	*99516163*
66	O-ring	2	2	2	2
116	Sleeve, inner	-	2	2	2
116	Sleeve, middle	1	1	1	1
116a	Sleeve	1	1	1	1
116b	Sleeve	1	1	1	1
116c	Sleeve	2	2	2	2
116e	Set screw	4	4	4	4
24	Pin spring	-	-	-	1

Coupling

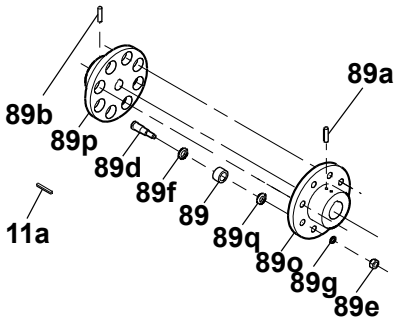

TM044767

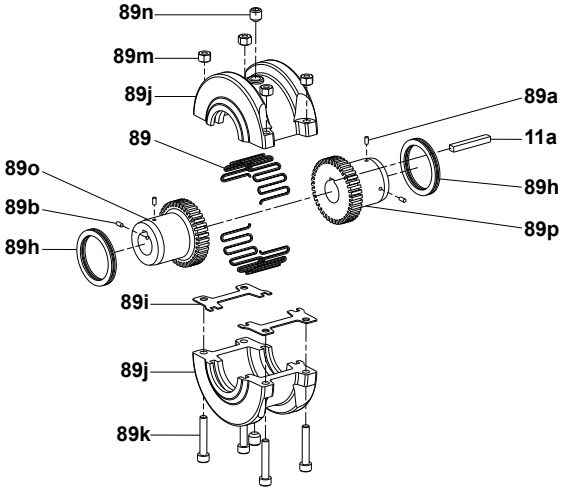

TM074153

Grundfos standard coupling			Grid coupling
Coupling complete	**Rubber**	**Bolts**	**Coupling complete**
89o:1 x male part 89p:1 x female part 89d:1 set of bolts/rubber parts 89a:1 x hexagon screw 89b:1 x hexagon screw 11a:1 x key	89: 1 set	89d:1 set of bolts 89f:1 set of washers 89q:1 set of washers 89g:1 set of lock washers 89e:1 set of nuts 89:1 set of rubber parts	89o:1 x coupling hub pump match 89p:1 x coupling hub motor match 11a:1 x key

Pump type	Motor brand	Pole	Power [kW]	Frame size	Shaft diameter [mm]		Coupling type	Grundfos standard coupling, pin bush			Grid coupling	
					Pump	Motor		Kit No	Rubber	Bolts	Coupling complete	Assemble set
LS 125-100-370x2	MMG-G	4	110	315S	44.45	80	GRID 80	-	-	-	*99392569*	*99392617*
LS 125-100-370x2	MMG-G	4	132	315M	44.45	80	GRID 90	-	-	-	*99596718*	*99392618*
LS 125-100-370x2	MMG-G	4	160	315L	44.45	80	GRID 90	-	-	-	*99596718*	*99392618*
LS 125-100-370x2	MMG-G	4	37	225S	44.45	60	GRID 70	-	-	-	*99392567*	*99392616*
LS 125-100-370x2	MMG-G	4	45	225M	44.45	60	GRID 70	-	-	-	*99392567*	*99392616*
LS 125-100-370x2	MMG-G	4	55	250M	44.45	65	GRID 70	-	-	-	*99392602*	*99392616*
LS 125-100-370x2	MMG-G	4	75	280S	44.45	75	GRID 80	-	-	-	*99392603*	*99392617*
LS 125-100-370x2	MMG-G	4	90	280M	44.45	75	GRID 80	-	-	-	*99392603*	*99392617*
LS 150-125-415x2	MMG-G	4	55	250M	44.45	65	GRID 70	-	-	-	*99392602*	*99392616*
LS 150-125-415x2	MMG-G	4	75	280S	44.45	75	GRID 80	-	-	-	*99392603*	*99392617*
LS 150-125-415x2	MMG-G	4	110	315S	44.45	80	GRID 80	-	-	-	*99392569*	*99392617*
LS 150-125-415x2	MMG-G	4	132	315M	44.45	80	GRID 90	-	-	-	*99596718*	*99392618*
LS 150-125-415x2	MMG-G	4	160	315L	44.45	80	GRID 90	-	-	-	*99596718*	*99392618*
LS 150-125-415x2	MMG-G	4	200	315L	44.45	80	GRID 90	-	-	-	*99596718*	*99392618*
LS 150-125-415x2	MMG-G	4	250	315M	44.45	100	GRID 110	-	-	-	*99596719*	*99392619*
LS 150-125-415x2	MMG-G	4	90	280M	44.45	75	GRID 80	-	-	-	*99392603*	*99392617*
LS 200-150-475x2	MMG-G	4	132	315M	57.15	80	GRID 90	-	-	-	*99596722*	*99392618*
LS 200-150-475x2	MMG-G	4	160	315L	57.15	80	GRID 90	-	-	-	*99596722*	*99392618*
LS 200-150-475x2	MMG-G	4	200	315L	57.15	80	GRID 90	-	-	-	*99596722*	*99392618*
LS 200-150-475x2	MMG-G	4	250	315M	57.15	100	GRID 110	-	-	-	*99596711*	*99392619*
LS 200-150-475x2	MMG-G	4	315	355L	57.15	100	GRID 110	-	-	-	*99596711*	*99392619*
LS 200-150-475x2	MMG-G	4	355	355C	57.15	100	GRID 110	-	-	-	*99596711*	*99392619*
LS 200-150-475x2	MMG-G	6	110	315L	57.15	80	GRID 90	-	-	-	*99596720*	*99392618*
LS 200-150-475x2	MMG-G	6	132	315L	57.15	80	GRID 90	-	-	-	*99596720*	*99392618*
LS 200-150-475x2	MMG-G	6	37	250M	57.15	65	GRID 70	-	-	-	*99392606*	*99392616*
LS 200-150-475x2	MMG-G	6	45	280S	57.15	75	GRID 80	-	-	-	*99392607*	*99392617*
LS 200-150-475x2	MMG-G	6	55	280M	57.15	75	GRID 80	-	-	-	*99392607*	*99392617*
LS 200-150-475x2	MMG-G	6	75	315S	57.15	80	GRID 80	-	-	-	*99392581*	*99392617*

Pump type	Motor brand	Pole	Power [kW]	Frame size	Shaft diameter [mm]		Coupling type	Grundfos standard coupling, pin bush			Grid coupling	
					Pump	Motor		Kit No	Rubber	Bolts	Coupling complete	Assemble set
LS 200-150-475x2	MMG-G	6	90	315M	57.15	80	GRID 90	-	-	-	*99596720*	*99392618*
LS 250-200-575x2	MMG-G	4	250	315M	79.38	100	GRID 110	-	-	-	*99596724*	*99392619*
LS 250-200-575x2	MMG-G	4	315	355L	79.38	100	GRID 110	-	-	-	*99596724*	*99392619*
LS 250-200-575x2	MMG-G	4	355	355C	79.38	100	GRID 110	-	-	-	*99596724*	*99392619*
LS 250-200-575x2	MMG-G	4	400	315DB	79.38	95	GRID 90	-	-	-	*99596725*	*99392618*
LS 250-200-575x2	MMG-G	4	450	355CB	79.38	95	GRID 90	-	-	-	*99596725*	*99392618*
LS 250-200-575x2	MMG-G	4	500	355CB	79.38	95	GRID 90	-	-	-	*99596725*	*99392618*
LS 250-200-575x2	MMG-G	4	560	400CB	79.38	110	GRID 110	-	-	-	*99596726*	*99392619*
LS 250-200-575x2	MMG-G	4	600	400CB	79.38	110	GRID 110	-	-	-	*99596726*	*99392619*
LS 250-200-575x2	MMG-G	4	425	355CB	79.38	95	GRID 90	-	-	-	*99596725*	*99392618*
LS 250-200-575x2	MMG-G	4	475	355CB	79.38	95	GRID 90	-	-	-	*99596725*	*99392618*
LS 250-200-575x2	MMG-G	4	530	355CB	79.38	95	GRID 90	-	-	-	*99596725*	*99392618*
LS 250-200-575x2	MMG-G	6	110	315L	79.38	80	GRID 90	-	-	-	*99596723*	*99392618*
LS 250-200-575x2	MMG-G	6	132	315L	79.38	80	GRID 90	-	-	-	*99596723*	*99392618*
LS 250-200-575x2	MMG-G	6	160	355M	79.38	100	GRID 110	-	-	-	*99596724*	*99392619*
LS 250-200-575x2	MMG-G	6	200	355M	79.38	100	GRID 110	-	-	-	*99596724*	*99392619*
LS 250-200-575x2	MMG-G	6	220	355M	79.38	100	GRID 110	-	-	-	*99596724*	*99392619*
LS 250-200-575x2	MMG-G	6	250	355L	79.38	100	GRID 110	-	-	-	*99596724*	*99392619*
LS 250-200-575x2	MMG-G	6	300	355C	79.38	100	GRID 110	-	-	-	*99596724*	*99392619*
LS 250-200-575x2	MMG-G	6	90	315M	79.38	80	GRID 90	-	-	-	*99596723*	*99392618*
LS 250-200-575x2	MMG-G	6	185	355M	79.38	100	GRID 110	-	-	-	*99596724*	*99392619*

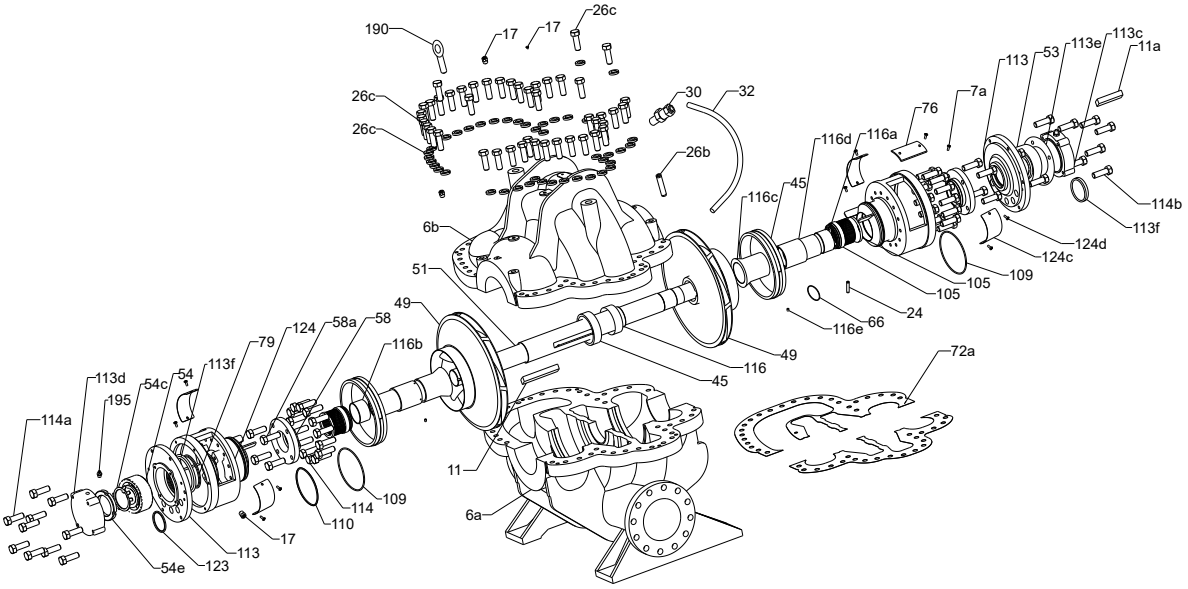
190
17
17
26c
26c
26c
30
32
26b
6b
51
49
116c
45
116d
116a
76
7a
113
53
113e
113c
11a
114b
113f
124d
124c
109
105
105
24
66
116e
116
49
45
72a
11
6a
116b
58
58a
124
79
113f
54
54c
113d
195
114a
109
114
110
17
113
123
54e
TM073964

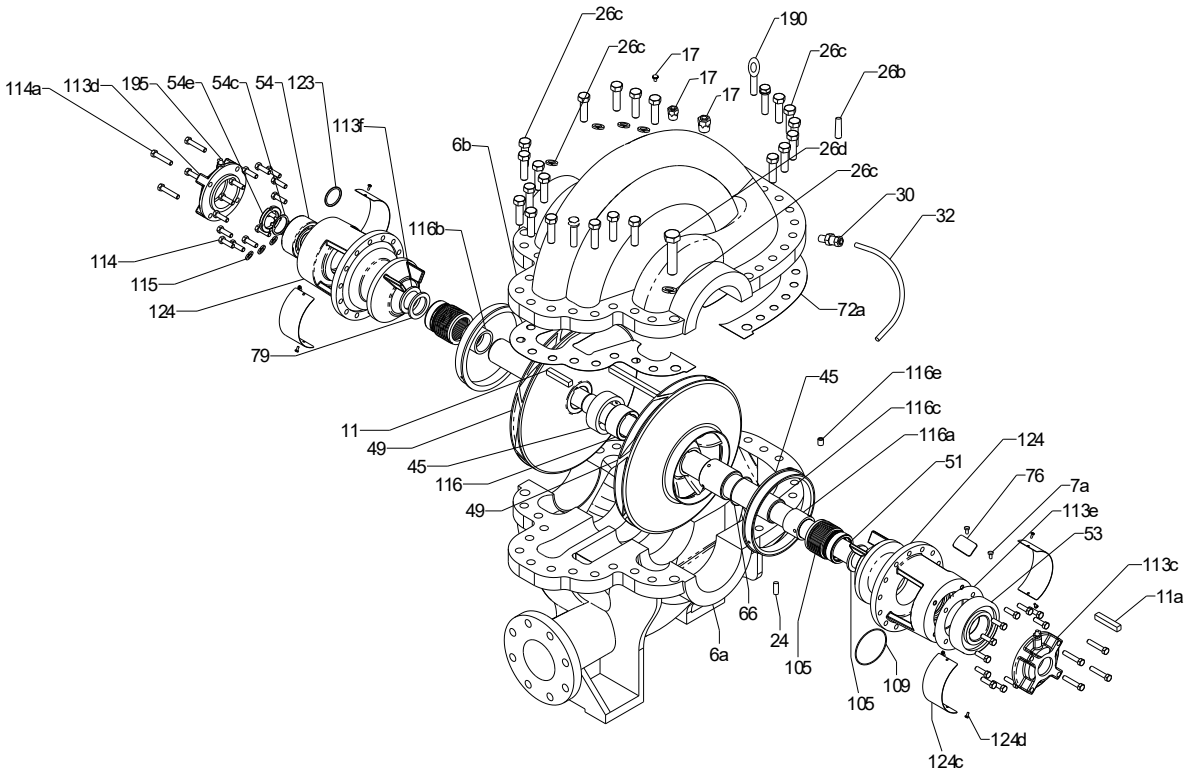
26c
26c
17
17
17
190
26c
26b
26d
26c
30
32
72a
6b
116b
113f
123
54
54c
54e
195
113d
114a
114
115
124
79
11
49
45
116
49
45
116e
116c
116a
124
51
76
7a
113e
53
113c
11a
66
24
105
6a
105
109
124d
124c
TM073965

40. MAGNA

MAGNA1 plug-connected versions

Clamp

Pos.	Description/Kit No	98148760
92	Clamp with screw	1

Control box, unconfigured Model A and C

Kit No		99363376	99364500
DN		Model	
25-		40 (6/10 bar)	40 (16 bar)
		60 (6/10 bar)	60 (16 bar)
		80 (6/10 bar)	80 (16 bar)
		100 (6/10 bar)	100 (16 bar)
		-	120 (16 bar)
		-	120 (6/10 bar)
32-		40 (6/10 bar)	40 (16 bar)
		60 (6/10 bar)	60 (16 bar)
		80 (6/10 bar)	80 (16 bar)
		-	100 (16 bar)
		-	100 (6/10 bar)
			120 (6/10 bar)
40-		-	40 (16 bar)
		-	60 (16 bar)
		-	40 (6/10 bar)
		-	60 (6/10 bar)

Control box, configured single-head pumps Control box content - Model A

Pump type	Kit No	
	PN 6/10	PN 16
MAGNA1 25-40 (N)	99089445	99260997
MAGNA1 25-60 (N)	99089446	99260998
MAGNA1 25-80 (N)	99089447	99260999
MAGNA1 25-100 (N)	99089444	99261000
MAGNA1 25-120 (N)	99260996	99261001
MAGNA1 32-40 (F) (N)	99089448	99261013
MAGNA1 32-60 (N)	99089449	99261014
MAGNA1 32-80 (N)	99089450	99261015
MAGNA1 32-100 (N)	99261002	99261016
MAGNA1 32-120 (N)	99261039	99261040
MAGNA1 40-40 (N)	99261017	99261019
MAGNA1 40-60 (N)	99261018	99261020

Control box, configured twin-head pumps PN 6/10, Model A

Pump type	Kit No	
	Head 1	Head 2
MAGNA1 D 32-40 (F)	99089451	
MAGNA1 D 32-60 (F)	99089452	
MAGNA1 D 32-80 (F)	99089453	
MAGNA1 D 32-100 (F)	99261021	99261022
MAGNA1 D 40-40 (F)	99261031	99261032
MAGNA1 D 40-60 (F)	99261033	99261034

Control box, configured twin-head pumps PN 16, Model A

Pump type	Kit No	
	Head 1	Head 2
MAGNA1 D 32-40 (F)	99261023	99261024
MAGNA1 D 32-60 (F)	99261025	99261026
MAGNA1 D 32-80 (F)	99261027	99261028
MAGNA1 D 32-100 (F)	99261029	99261030
MAGNA1 D 40-40 (F)	99261035	99261036
MAGNA1 D 40-60 (F)	99261037	99261038

Pos.	Description	Quantity
163	Complete control box	1
163a	Screw	2
164	Control box cover	1
164a	Screw	5

Control box, configured single-head pumps Control box content - Model C

Pump type	Kit No	
	PN 6/10	PN 16
MAGNA1 25-40 (N)	99487535	99487536
MAGNA1 25-60 (N)	99487538	99487539
MAGNA1 25-80 (N)	99487541	99487542
MAGNA1 25-100 (N)	99487544	99487545
MAGNA1 25-120 (N)	99487547	99487548
MAGNA1 32-40 (F) (N)	99487550	99487551
MAGNA1 32-60 (N)	99487556	99487557
MAGNA1 32-80 (N)	99487562	99487563
MAGNA1 40-40 (N)	99487575	99487574
MAGNA1 40-60 (N)	99487578	99487577

Control box, configured twin-head pumps PN 6/10, Model C

Pump type	Kit No	
	Head 1	Head 2
MAGNA1 D 32-40 (F)	99487580	99487665
MAGNA1 D 32-60 (F)	99487584	99487669
MAGNA1 D 32-80 (F)	99487588	99487673
MAGNA1 D 32-100 (F)	99487592	99487677
MAGNA1 D 40-40 (F)	99487597	99487682
MAGNA1 D 40-60 (F)	99487599	99487684

MAGNA1 plug-connected versions
Model A

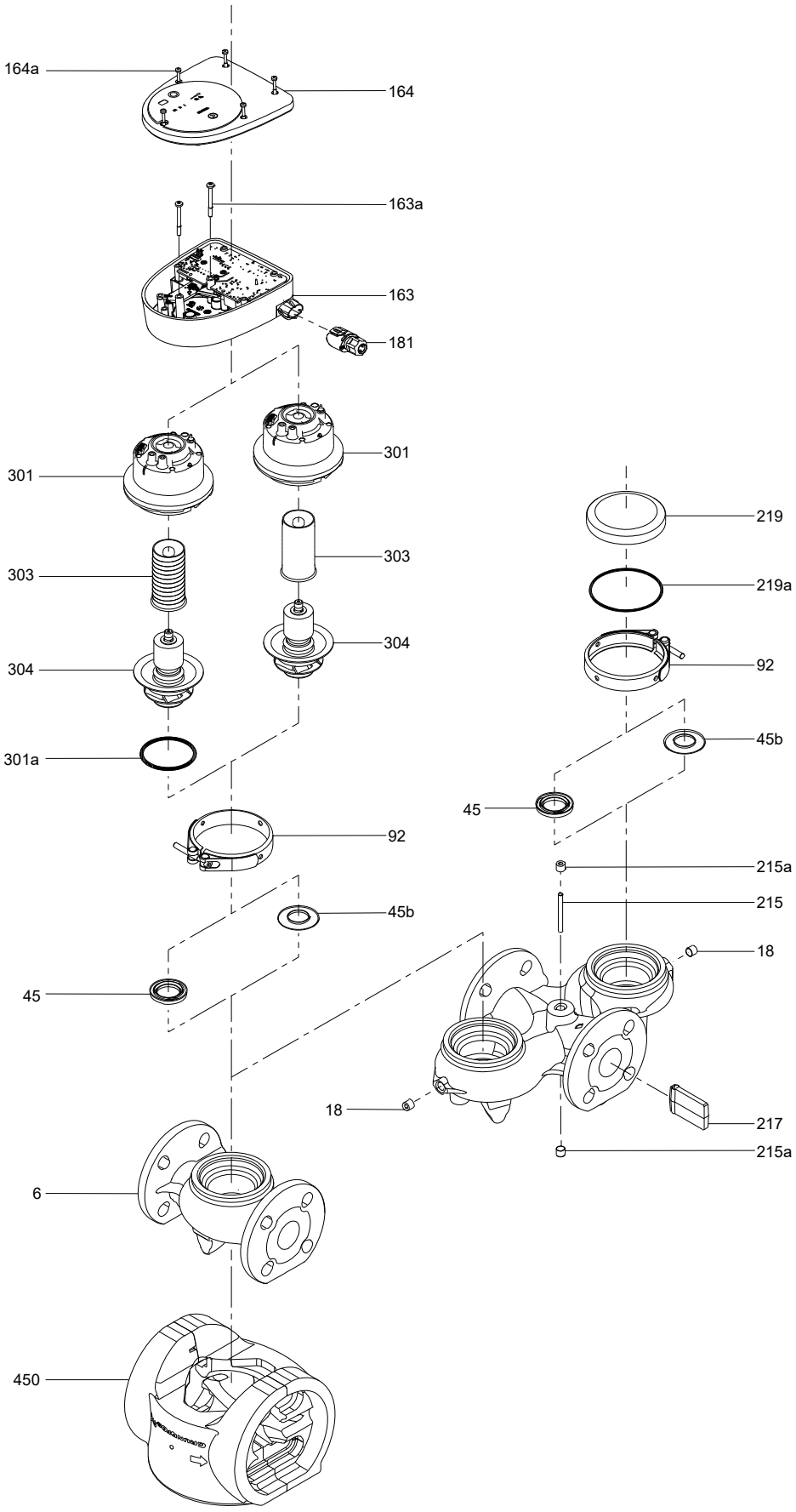

Model C

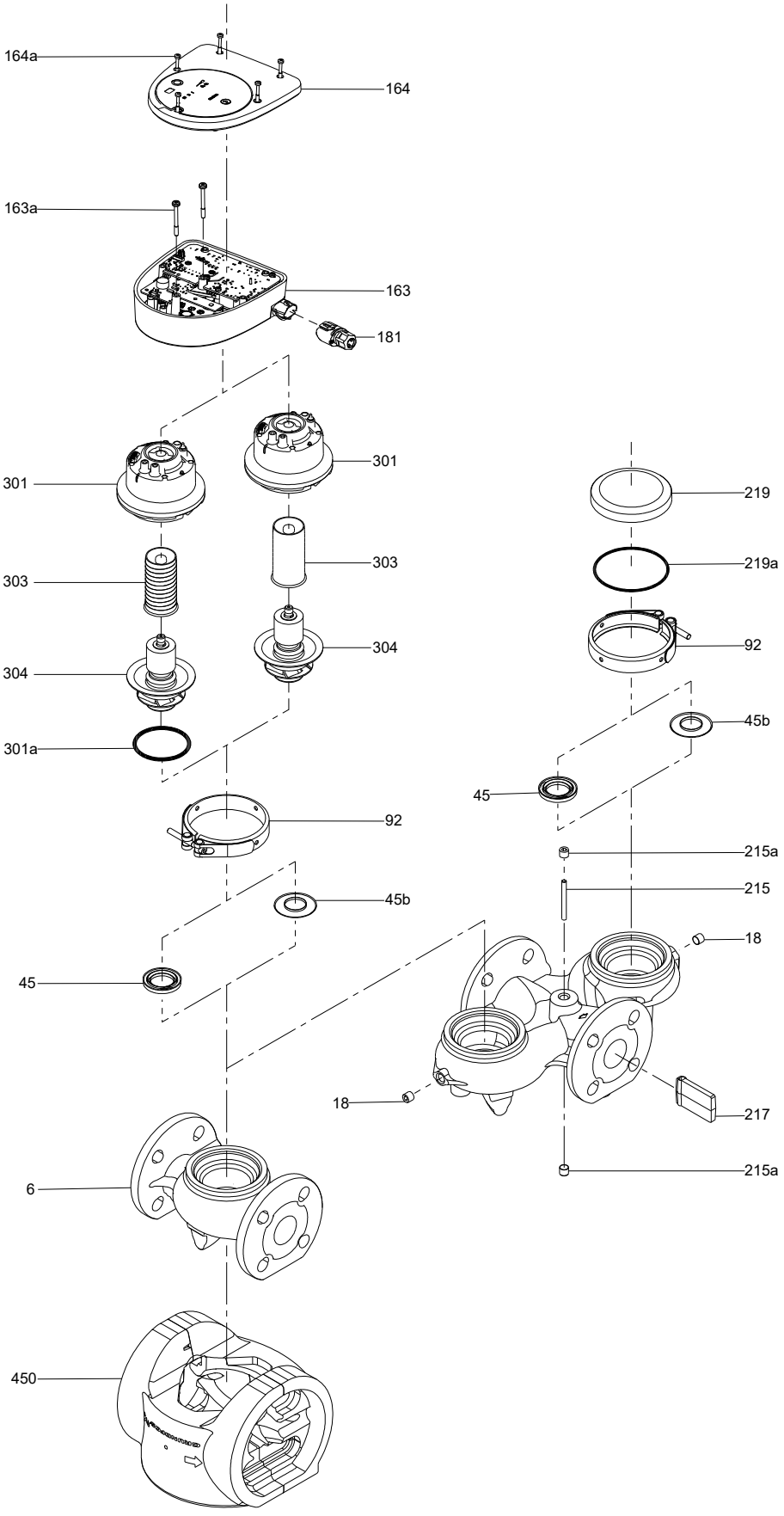
164a
164
163a
163
181
301
301
303
303
304
304
301a
92
45b
45
6
450
219
219a
92
45b
45
215a
215
18
18
217
215a
TM071647

Control box, configured twin-head pumps
PN 16, Model C

Pump type	Kit No	
	Head 1	Head 2
MAGNA1 D 32-40 (F)	*99487581*	*99487666*
MAGNA1 D 32-60 (F)	*99487585*	*99487670*
MAGNA1 D 32-80 (F)	*99487589*	*99487674*
MAGNA1 D 32-100 (F)	*99487593*	*99487678*
MAGNA1 D 40-40 (F)	*99487596*	*99487681*
MAGNA1 D 40-60 (F)	*99487598*	*99487683*

Pos.	Description	Quantity
163	Complete control box	1
163a	Screw	2
164	Control box cover	1
164a	Screw	5

Control box cover

Pos.	Description/Kit No/pcs	Model A	Model C
164	Control box cover	*98988010*	*99364501*

O-ring

Pos.	Description/Kit No	***98357755***
301a	O-ring	1

Insulation shells

Description	Kit No
DN25/DN32 180	*98615808*
DN32-100 F 220	*98615809*
DN40-60 F 220	*98615810*

Plug

Pos.	Description/Kit No	Model A	Model C
		98284561	*99461932*
181	Plug (ALPHA)	1	1
-	Green connector, angled		1
-	Green connector, angled		1

Pump head
Model A and C
Including shaft with impeller and rotor can

Pos.	Description	Kit No/pcs
	DN 25/32 (10 bar) (stainless rotor can)	*98357751*
	DN 25/32 (16 bar) (Composite rotor can)	*98357752*
	DN 40 (16 bar) (Composite rotor can)	*98357753*
92	Clamp	1
163a	Screw	2
301	Pump head	1

Two-way flap

Pos.	Description	Kit No/pcs
	DN 32	*96407253*
	DN 40	*96407254*
215	Pin	1
217	Rubber flap	1

Pump housing
Model A and C

Pump DN size	Size			Kit no.
	PN6	PN10	PN16	
MAGNA1 DN32	•	•	•	*98660054*

Service pump housings are only available for flanged versions.

MAGNA1 plug-connected versions
Model A

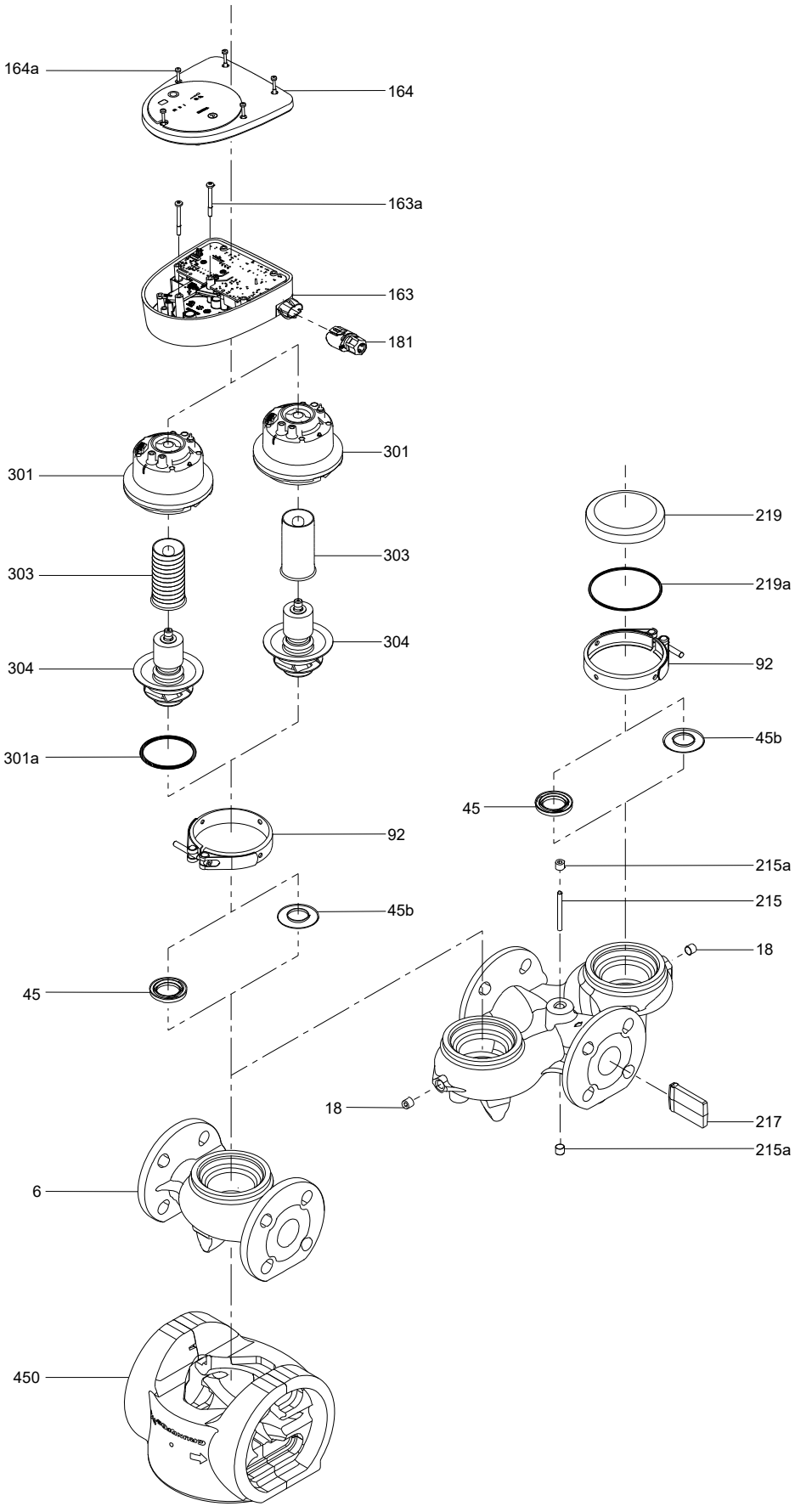

Model C

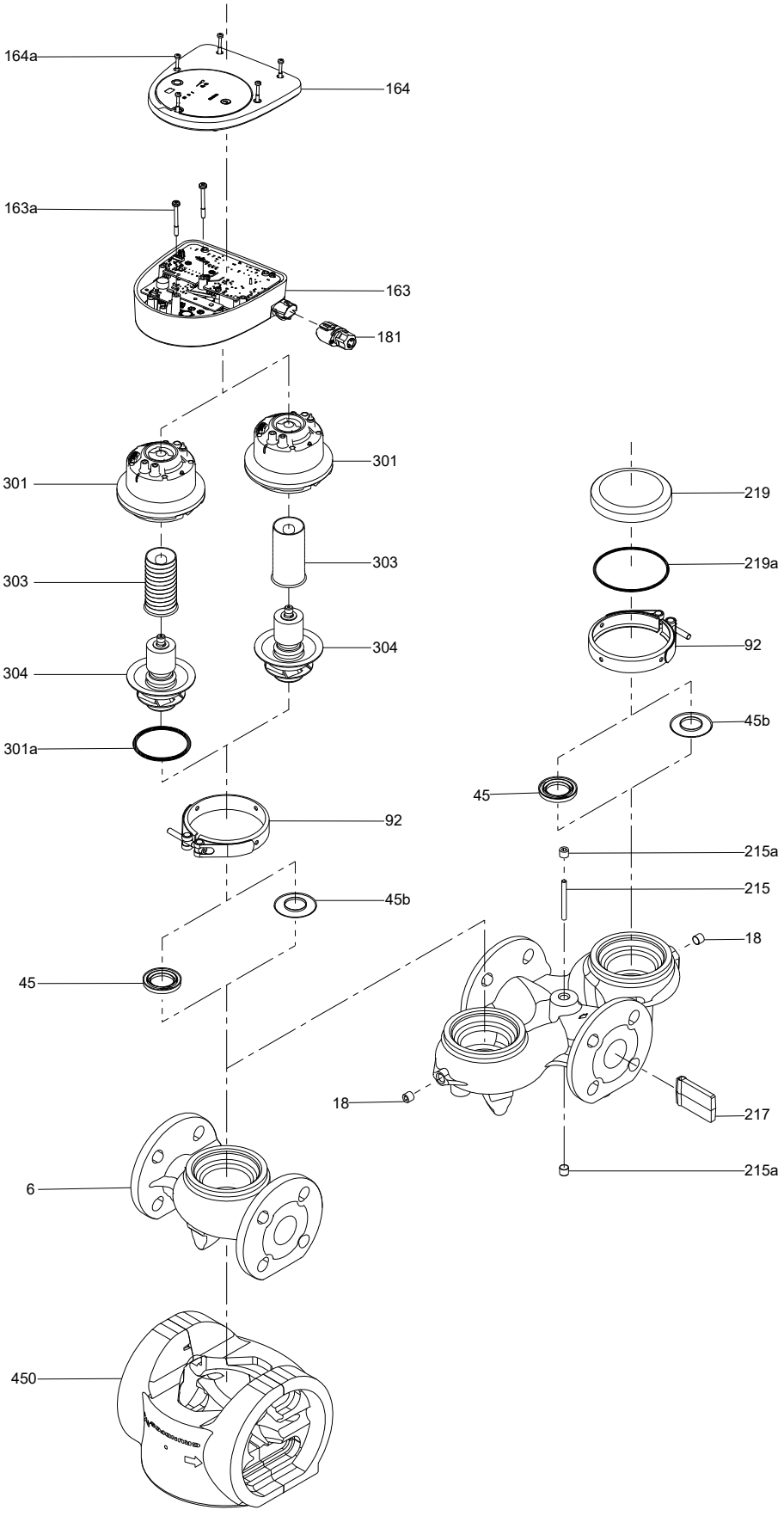
164a
164
163a
163
181
301
301
303
303
304
304
301a
92
45b
45
6
450
219
219a
92
45b
215a
215
18
18
217
215a
TM071647

NAMREG MAGNA1

Clamp
Model B

Pos.	Description/Kit No	
92	Clamp with screw	*98700283*

Control box, unconfigured
Model B

Pos.	Description/Kit No	***98463319***
163	Control box complete	1
163a	Screw	2
164	Control box cover	1
164a	Screw	5

Control box, configured single-head pumps

Pump type	Kit No
MAGNA1 32-60	*99072283*
MAGNA1 32-100	*99072284*

Insulation shells

Description	Kit No
DN32-xx	*98827412*

O-ring

Pos.	Description/Kit No	***98700281***
301a	O-ring	1

NAMREG MAGNA1
Model B

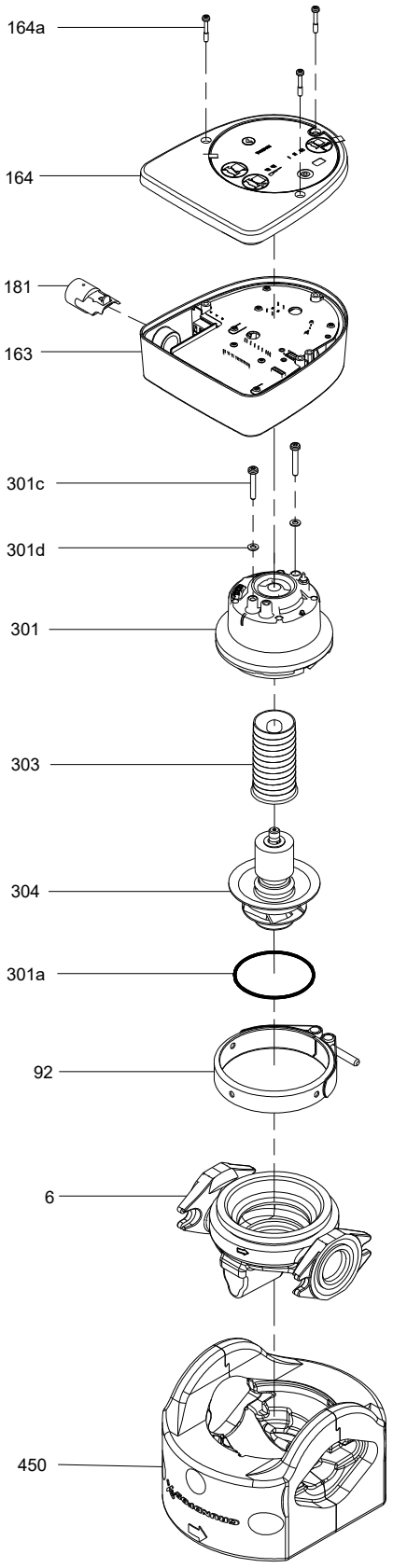

MAGNA1 terminal-connected versions

Clamp

Pos.	Description/Kit No	98148759
92	Clamp with screw	1

Control box,unconfigured Model A, B and C

Pos.	Description	750W	1600W
	Kit No	99280445	98280446
163	Control box complete	1	1
163a	Screw	2	2
163d	Screw	1	1
164	Control box cover	1	1
301b	Protector (EMC)	1	1

Control box, configured single-head pumps Model A an B

Pump type	Kit No	
	PN 6/10	PN 16
MAGNA1 32-120 F (N)	99090662	99090695
MAGNA1 40-80 F (N)	99090661	99090696
MAGNA1 40-100 (N)	99090693	99090698
MAGNA1 40-120 (N)	99090697	99090703
MAGNA1 40-150 (N)	99090704	99090715
MAGNA1 40-180 (N)	99090712	99090729
MAGNA1 50-40 F (N)	99090694	99090699
MAGNA1 50-60 (N)	99090700	99090706
MAGNA1 50-80 F (N)	99090702	99090711
MAGNA1 50-100 (N)	99090705	99090716
MAGNA1 50-120 F	99090708	99090723
MAGNA1 50-150 F	99090719	99090738
MAGNA1 50-180 F	99090739	99090752
MAGNA1 65-40 F	99090701	99090709
MAGNA1 65-60 F	99090707	99090720
MAGNA1 65-80 F	99090713	99090730
MAGNA1 65-100 (N)	99090717	99090735
MAGNA1 65-120 (N)	99090726	99090743

Pump type	Kit No		
	PN 6	PN 6/10	PN 16
MAGNA1 80-40 F	99090710	99090714	99090725
MAGNA1 80-60 (N)	99090718	99090724	99090737
MAGNA1 80-80 F (N)	99090728	99090734	99090746
MAGNA1 80-100 F	99426917	99426921	99426971
MAGNA1 80-120 F	99426918	99426922	99426972
MAGNA1 100-40 F (N)	99090727	99090733	99090745
MAGNA1 100-60 (N)	99090736	99090742	99090751
MAGNA1 100-80 F	99426933	99426938	99426975
MAGNA1 100-100 F	99426934	99426939	99426976
MAGNA1 100-120 F	99426935	99426940	99427004

Control box, configured single-head pumps Model C

Pump type	Kit No	
	PN 6/10	PN 16
MAGNA1 40-80 F (N)	99426871	99426952
MAGNA1 40-100 (N)	99426872	99426953
MAGNA1 40-120 (N)	99426883	99426954
MAGNA1 40-150 (N)	99426884	99426955
MAGNA1 40-180 (N)	99426885	99426956
MAGNA1 50-60 (N)	99426891	99426957
MAGNA1 50-80 F (N)	99426892	99426958
MAGNA1 50-100 (N)	99426893	99426959
MAGNA1 50-120 F	99426894	99426960
MAGNA1 50-150 F	99426895	99426961
MAGNA1 50-180 F	99426896	99426962
MAGNA1 65-40 F	99426903	99426963
MAGNA1 65-60 F	99426904	99426964
MAGNA1 65-80 F	99426905	99426965
MAGNA1 65-100 (N)	99426906	99426966
MAGNA1 65-120 (N)	99426907	99426967
MAGNA1 65-150 (N)	99426908	99426968

Pump type	Kit No		
	PN 6	PN 6/10	PN 16
MAGNA1 80-60 (N)	99426915	99426919	99426969
MAGNA1 80-80 F (N)	99426916	99426920	99426970
MAGNA1 80-100 F	99426917	99426921	99426971
MAGNA1 80-120 F	99426918	99426922	99426972
MAGNA1 100-40 F (N)	99426931	99426936	99426973
MAGNA1 100-60 (N)	99426932	99426937	99426974
MAGNA1 100-80 F	99426933	99426938	99426975
MAGNA1 100-100 F	99426934	99426939	99426976
MAGNA1 100-120 F	99426935	99426940	99427004

Control box cover

Pos.	Description/Kit No	Model A, B	Model C
		98148728	99280465
164	Control box cover	1	1
164a	Screw	5	5

O-ring Model A, B and C

Pos.	Description/Kit No	98148761
301a	O-ring	1

Control box, configured twin-head pumps PN 6/10, Model A,B

Pump type	Kit No
	Model A,B
	Head I and head II
MAGNA1 D 32-120 F (N)	*99090722*
MAGNA1 D 40-80 F (N)	*99090721*
MAGNA1 D 40-100 (N)	*99090731*
MAGNA1 D 40-120 (N)	*99090747*
MAGNA1 D 40-150 (N)	*99090756*
MAGNA1 D 40-180 (N)	*99090764*
MAGNA1 D 50-40 F (N)	*99090732*
MAGNA1 D 50-60 (N)	*99090750*
MAGNA1 D 50-80 F (N)	*99090754*
MAGNA1 D 50-100 (N)	*99090757*
MAGNA1 D 50-120 F	*99090760*
MAGNA1 D 50-150 F	*99090771*
MAGNA1 D 50-180 F	*99090787*
MAGNA1 D 65-40 F	*99090753*
MAGNA1 D 65-60 F	*99090759*
MAGNA1 D 65-80 F	*99090765*
MAGNA1 D 65-100 F (N)	*99090769*
MAGNA1 D 65-120 F (N)	*99090776*
MAGNA1 D 65-150 F (N)	*99426914*

Control box, configured twin-head pumps PN 16, Model A,B

Pump type	Kit No
	Model A,B
	Head I and head II
MAGNA1 D 32-120 F (N)	*99090741*
MAGNA1 D 40-80 F (N)	*99090740*
MAGNA1 D 40-100 (N)	*99090748*
MAGNA1 D 40-120 (N)	*99090755*
MAGNA1 D 40-150 (N)	*99090767*
MAGNA1 D 40-180 (N)	*99090779*
MAGNA1 D 50-40 F (N)	*99090749*
MAGNA1 D 50-60 (N)	*99090758*
MAGNA1 D 50-80 F (N)	*99090763*
MAGNA1 D 50-100 (N)	*99090768*
MAGNA1 D 50-120 F	*99090773*
MAGNA1 D 50-150 F	*99090786*
MAGNA1 D 50-180 F	*99090793*
MAGNA1 D 65-40 F	*99090761*
MAGNA1 D 65-60 F	*99090772*
MAGNA1 D 65-80 F	*99090780*
MAGNA1 D 65-100 (N)	*99090783*
MAGNA1 D 65-120 (N)	*99090789*
MAGNA1 D 65-150 (N)	-

Control box, configured twin-head pumps PN 6/10, Model C

Pump type	Kit No	
	Model C	
	Head I	Head II
MAGNA1 D 40-80 F (N)	*99426886*	*99427011*
MAGNA1 D 40-100 (N)	*99426887*	*99427012*
MAGNA1 D 40-120 (N)	*99426888*	*99427013*
MAGNA1 D 40-150 (N)	*99426889*	*99427014*
MAGNA1 D 40-180 (N)	*99426890*	*99427015*
MAGNA1 D 50-40 F (N)	*99427005*	*99427073*
MAGNA1 D 50-60 (N)	*99426897*	*99427016*
MAGNA1 D 50-80 F (N)	*99426898*	*99427017*
MAGNA1 D 50-100 (N)	*99426899*	*99427018*
MAGNA1 D 50-120 F	*99426900*	*99427019*
MAGNA1 D 50-150 F	*99426901*	*99427020*
MAGNA1 D 50-180 F	*99426902*	*99427021*
MAGNA1 D 65-40 F	*99426909*	*99427022*
MAGNA1 D 65-60 F	*99426910*	*99427023*
MAGNA1 D 65-80 F	*99426911*	*99427024*
MAGNA1 D 65-100 (N)	*99426912*	*99427025*
MAGNA1 D 65-120 (N)	*99426913*	*99427026*
MAGNA1 D 65-150 (N)	*99426914*	*99427027*

Control box, configured twin-head pumps PN 16, Model C

Pump type	Kit No	
	Model C	
	Head I	Head II
MAGNA1 D 40-80 F (N)	*99426978*	*99427047*
MAGNA1 D 40-100 (N)	*99426979*	*99427048*
MAGNA1 D 40-120 (N)	*99426980*	*99427049*
MAGNA1 D 40-150 (N)	*99426981*	*99427050*
MAGNA1 D 40-180 (N)	*99426982*	*99427051*
MAGNA1 D 50-40 F (N)	*99427008*	*99427076*
MAGNA1 D 50-60 (N)	*99426983*	*99427052*
MAGNA1 D 50-80 F (N)	*99426984*	*99427053*
MAGNA1 D 50-100 (N)	*99426985*	*99427054*
MAGNA1 D 50-120 F	*99426986*	*99427055*
MAGNA1 D 50-150 F	*99426987*	*99427056*
MAGNA1 D 50-180 F	*99426988*	*99427057*
MAGNA1 D 65-40 F	*99426989*	*99427058*
MAGNA1 D 65-60 F	*99426990*	*99427059*
MAGNA1 D 65-80 F	*99426991*	*99427060*
MAGNA1 D 65-100 (N)	*99426992*	*99427061*
MAGNA1 D 65-120 (N)	*99426993*	*99427062*
MAGNA1 D 65-150 (N)	*99426994*	*99427063*

Control box, configured twin-head pumps PN 6, Model C

Pump type	Kit No	
	Model C	
	Head I	Head II
MAGNA1 D 80-40 F (N)	99427006	99427074
MAGNA1 D 80-60 (N)	99426923	99427028
MAGNA1 D 80-80 F (N)	99426924	99427029
MAGNA1 D 80-100 (N)	99426925	99427030
MAGNA1 D 80-120 F	99426926	99427031
MAGNA1 D 100-40 F	99426941	99427036
MAGNA1 D 100-60 F	99426942	99427037
MAGNA1 D 100-80 F	99426943	99427038
MAGNA1 D 100-100 (N)	99426944	99427039
MAGNA1 D 100-120 (N)	99426945	99427040

Control box, configured twin-head pumps PN 10, Model C

Pump type	Kit No	
	Model C	
	Head I	Head II
MAGNA1 D 80-40 F (N)	99427007	99427075
MAGNA1 D 80-60 (N)	99426927	99427032
MAGNA1 D 80-80 F (N)	99426928	99427033
MAGNA1 D 80-100 (N)	99426929	99427034
MAGNA1 D 80-120 F	99426930	99427035
MAGNA1 D 100-40 F	99426946	99427041
MAGNA1 D 100-60 F	99426947	99427042
MAGNA1 D 100-80 F	99426948	99427043
MAGNA1 D 100-100 (N)	99426949	99427044
MAGNA1 D 100-120 (N)	99426950	99427045

Control box, configured twin-head pumps PN 16, Model C

Pump type	Kit No	
	Model C	
	Head I	Head II
MAGNA1 D 80-40 F (N)	99427009	99427077
MAGNA1 D 80-60 (N)	99426995	99427064
MAGNA1 D 80-80 F (N)	99426996	99427065
MAGNA1 D 80-100 (N)	99426997	99427066
MAGNA1 D 80-120 F	99426998	99427067
MAGNA1 D 100-40 F	99426999	99427072
MAGNA1 D 100-60 F	99427000	99427068
MAGNA1 D 100-80 F	99427001	99427069
MAGNA1 D 100-100 (N)	99427002	99427070
MAGNA1 D 100-120 (N)	99427003	99427071

Pump head
Including shaft with impeller and rotor can

Pos.	Description	Kit No/pcs
	Model	A, B and C
	DN 32-120	98148737
	DN 40-80/100	98148739
	DN 40-120/150/180	98148741
	DN 50-40/60/80	98148743
	DN 50-100	98980689
	DN 50-120	98148745
	DN 50-150/180	98148747
	DN 65-40/60	98148749
	DN 65-80/100/120	98148751
	DN 65-150	98148753
	DN 80-40/60	98148755
	DN 80-80/100/120	98148757
	DN 100-40/60	98148755
	DN 100-80/100/120	98148757
92	Clamp	1
163a	Screw	2
163d	Screw	1
301	Pump head	1
301a	O-ring	1
301b	Gasket (EMC protection)	1

Two-way flap
Model A, B and C

Pos.	Description	Kit No/pcs
	DN 32	96407253
	DN 40	96407254
	DN 50	96407255
	DN 65	96407256
	DN 80	96407257
	DN 100	96407258
215	Pin	1
217	Rubber flap	1

Pump housing

Note: pump houses for DN 40, port to port length 220 mm and DN 50, port to port length 240 mm are not available.

Model A, B and C

Pump DN size	Size			Kit no.
	PN6	PN10	PN16	
MAGNA1 DN32	•	•	•	*98660054*
MAGNA1 DN40	•	•	•	*98660055*
MAGNA1 DN50	•	•	•	*98660056*
MAGNA1 DN65	•	•	•	*98660057*
MAGNA1 DN80	•			*98660058*
MAGNA1 DN80		•	•	*98660059*
MAGNA1 DN100	•			*98660060*
MAGNA1 DN100		•	•	*98660061*
MAGNA1 D DN32	•	•	•	*98660070*
MAGNA1 D DN40	•	•	•	*98660071*
MAGNA1 D DN50	•	•	•	*98660072*
MAGNA1 D DN65	•	•	•	*98660073*
MAGNA1 D DN80	•			*98660074*
MAGNA1 D DN80		•	•	*98660075*
MAGNA1 D DN100	•			*98660076*
MAGNA1 D DN100		•	•	*98660077*

MAGNA1 terminal-connected versions
Model A, B

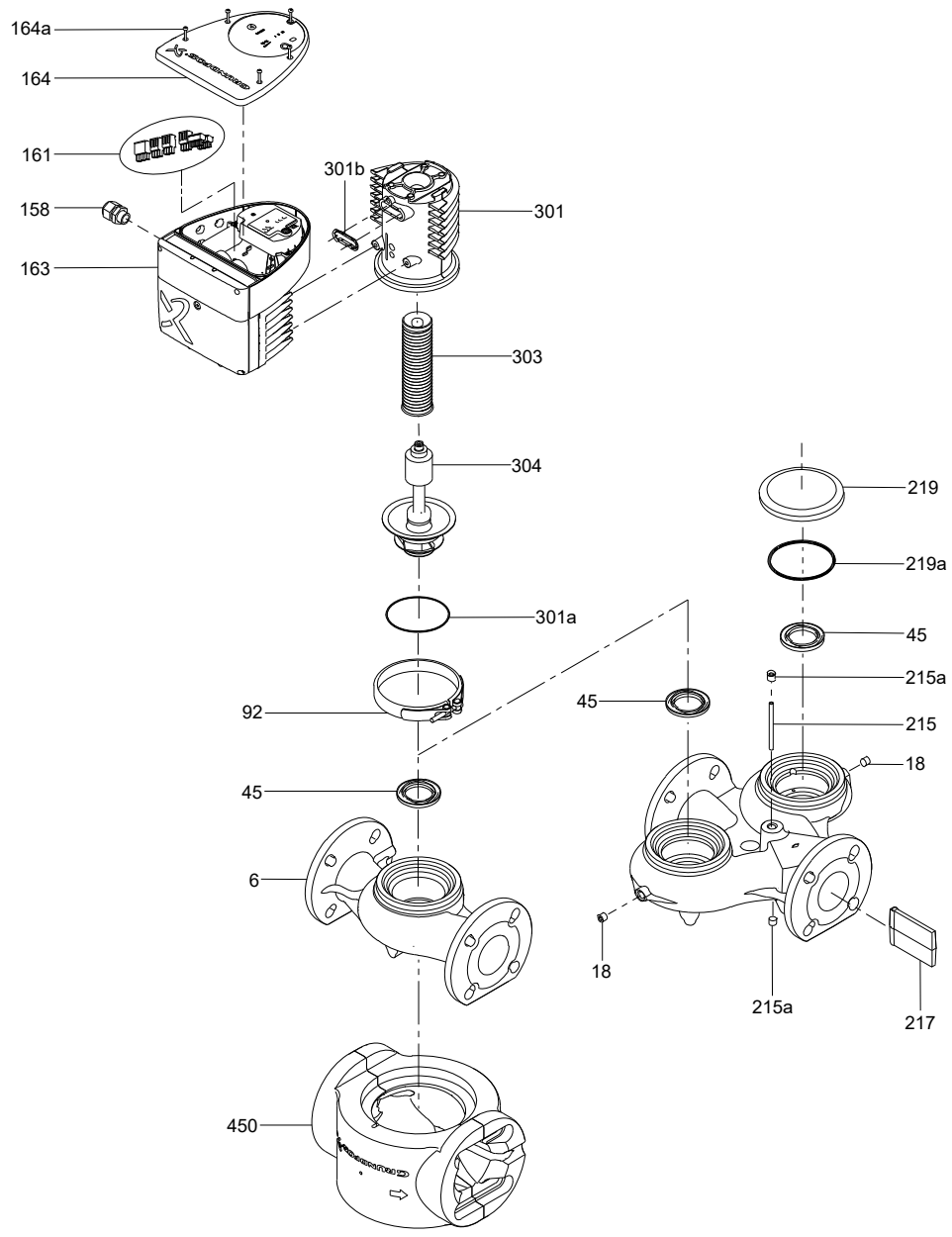

Model C

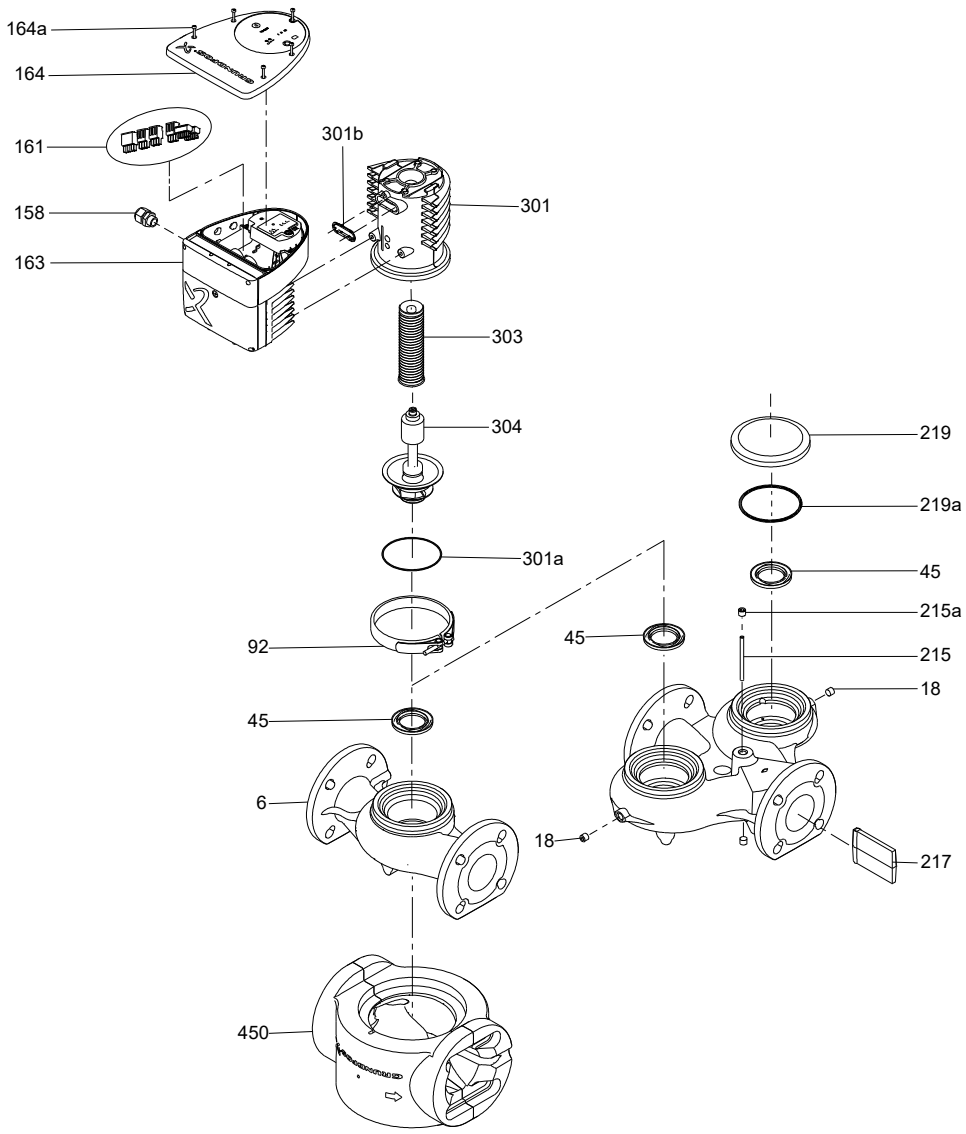
164a
164
161
158
163
301b
301
303
304
301a
92
45
6
450
219
219a
45
215a
45
215
18
18
217
TM071648

NAMREG MAGNA1 terminal-connected versions

Additional kits

Description	Kit No/pcs
Terminal connector plug kit	*98529570*
Gasket GF 15/40 kit	*98721416*
Cable gland kit	*98578414*

Clamp

Pos.	Description/Kit No	*98700282*
92	Clamp with screw	1

Control box, unconfigured
Model B

Pos.	Description	650W	750W	1600W
	Kit No	*98463325*	*98463323*	*98463321*
163	Control box complete	1	1	1
163a	Screw	2	2	2
163d	Screw	1	1	1
301b	Protector (EMC)	1	1	1

Control box, configured single-head pumps
Model B

Pump type	Kit No
MAGNA1 40-80 115V	*99072289*
MAGNA1 40-80 230V	*99072290*
MAGNA1 40-120 115V	*99072285*
MAGNA1 40-120 230V	*99072286*
MAGNA1 40-180 115V	*99072287*
MAGNA1 40-180 230V	*99072288*
MAGNA1 50-80 115V	*99072293*
MAGNA1 50-80 230V	*99072294*
MAGNA1 50-150 115V	*99072291*
MAGNA1 50-150 230	*99072292*
MAGNA1 65-120 115V	*99072295*
MAGNA1 65-120 230V	*99072296*
MAGNA1 65-150 230V	*99072297*
MAGNA1 80-100 230V	*99072298*
MAGNA1 100-120 230V	*99072299*
MAGNA1 32-60 230V	*99072284*
MAGNA1 32-100 230V	*99072283*
MAGNA1 40-80 115V	*99072289*
MAGNA1 40-80 230V	*99072290*
MAGNA1 40-120 115V	*99072285*
MAGNA1 40-120 230V	*99072286*
MAGNA1 40-180 115V	*99072287*
MAGNA1 40-180 230V	*99072288*
MAGNA1 50-80 115V	*99072293*
MAGNA1 50-80 230V	*99072294*
MAGNA1 50-150 115V	*99072291*
MAGNA1 50-150 230V	*99072292*
MAGNA1 65-120 115V	*99072295*
MAGNA1 65-120 230V	*99072296*
MAGNA1 65-150 230V	*99072297*
MAGNA1 80-100 230V	*99072298*
MAGNA1 100-120 230V	*99072299*

Insulation shells

Description	Kit No
DN40-xx	*98827415*
DN50-xx	*98827416*
DN65-xx	*98827417*
DN80-xx	*98827418*
DN100-120	*98827419*

O-ring

Pos.	Description/Kit No	*98148761*
301a	O-ring	1

Pump head
Model B
Including shaft with impeller and rotor can

Pos.	Description	Kit No/pcs
	MAGNA1 65-120 GF 340 115V	*98460156*
	MAGNA1 40-80 GF 216 115V	*98460169*
	MAGNA1 40-120 GF 216 115V	*98460167*
	MAGNA1 50-80 GF 240 115V	*98460163*
	MAGNA1 50-150 GF 280 115V	*98460160*
	MAGNA1 40-80 GF 216 230V	*98460171*
	MAGNA1 40-120 GF 216 230V	*98460164*
	MAGNA1 50-150 GF 280 230V	*98460172*
	MAGNA1 65-120 GF 340 230V	*98460155*
	MAGNA1 65-150 GF 340 230V	*98460153*
	MAGNA1 80-100 GF 360 230V	*98460152*
92	Clamp	1
163a	Screw	2
163d	Screw	1
301	Pump head	1
301a	O-ring	1

Pump housing
Model B

Pump DN size	Size	Kit no.
MAGNA1 GF40	Psi 150	*98660086*
MAGNA1 GF65	Psi 150	*98660087*
MAGNA1 GF100	Psi 150	*98660088*
MAGNA1 D GF100	Psi 150	*98660092*

NAMREG MAGNA1 terminal-connected versions

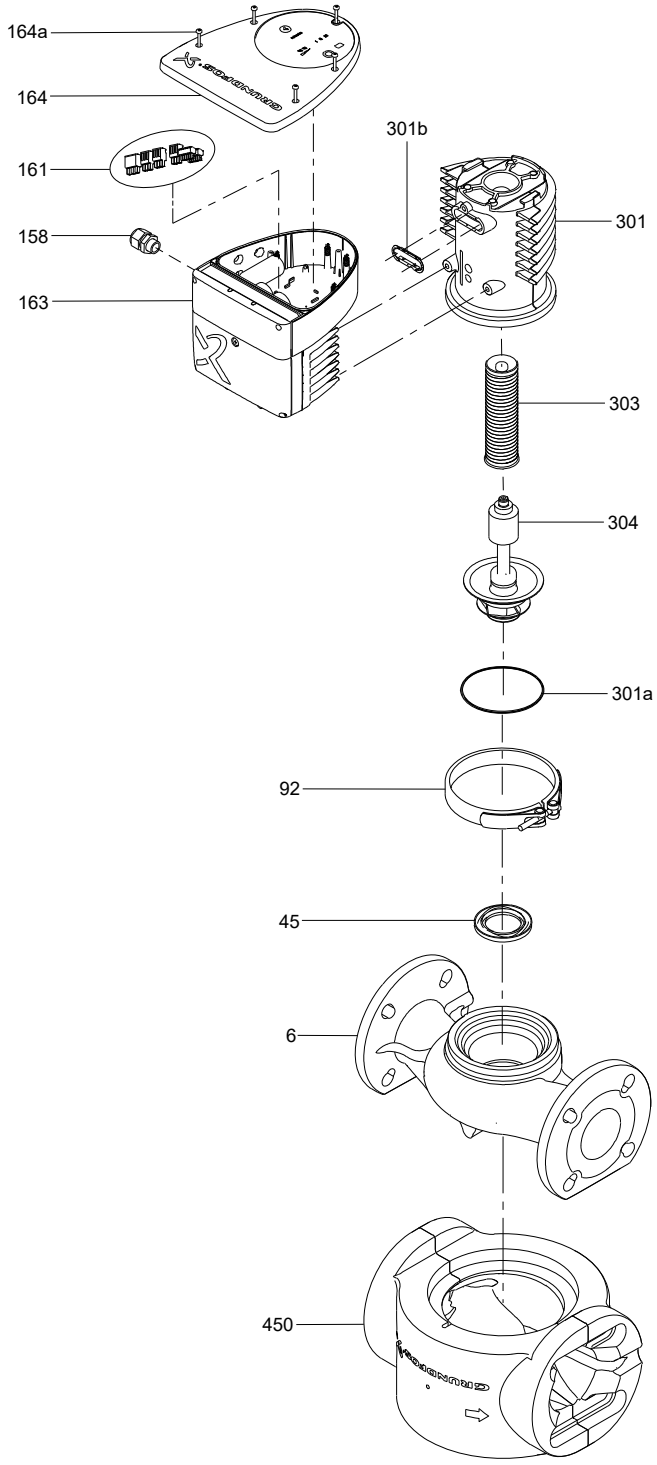

MAGNA3 plug-connected versions

Clamp

Pos.	Description /Kit No	98148760
92	Clamp with screw	1

Control box, unconfigured

Pos.	Description/ kit No	98148726
-	Control box complete incl. sensor and cable	1
163e	Locking pin	1

Control box, configured single-head pumps

Model A, B, C and D

Pump type	Kit No	
	Model A,B and C	Model D
MAGNA3 25-40 (N) PN10	99091429	99331450
MAGNA3 25-40 (N) PN16	99091430	99331507
MAGNA3 25-60 (N) PN10	99091431	99331523
MAGNA3 25-60 (N) PN16	99091454	99331532
MAGNA3 25-80 (N) PN10	99091453	99331526
MAGNA3 25-80 (N) PN16	99091459	99331599
MAGNA3 25-100 (N) PN10	99091457	99331595
MAGNA3 25-100 (N) PN16	99091464	99331632
MAGNA3 25-120 (N) PN10	99091462	99331629
MAGNA3 25-120 (N) PN16	99091469	99331650
MAGNA3 32-40 (F) (N) PN10	99091432	99331525
MAGNA3 32-40 (F) (N) PN16	99091456	99331660
MAGNA3 32-60 (F) (N) PN10	99091455	99331547
MAGNA3 32-60 (F) PN16	99091461	99331624
MAGNA3 32-80 (F) (N) PN10	99091458	99331617
MAGNA3 32-80 (F) (N) PN16	99091465	99331644
MAGNA3 32-100 (F) (N) PN10	99091460	99331615
MAGNA3 32-100 (F) (N) PN16	99091468	99331648
MAGNA3 32-120 (N) PN10	99091466	99332321
MAGNA3 32-120 PN16	99091471	99332347
MAGNA3 40-40 F (N) PN10	99091463	99331631
MAGNA3 40-40 F PN16	99091470	99331596
MAGNA3 40-60 F (N) PN10	99091467	99331647
MAGNA3 40-60 F PN16	99091472	99331660

Pos.	Description	
162	Control box , upper part	1
163	Control box. lower part	1
531	Sensor	1
531a	Seal cap	1
159	Cable	1
164	Control box cover	1
163f	Screw	2
164a	Screw	3

Control box, configured twin-head pumps

Model A

Pump type	Kit No	
	Model A,B and C	
	Head I	Head II
MAGNA3 D 32-40 (F) PN10	99091473	99805568
MAGNA3 D 32-40 (F) PN16	99091475	99805569
MAGNA3 D 32-60 (F) PN10	99091474	99805570
MAGNA3 D 32-60 (F) PN16	99091479	99805571
MAGNA3 D 32-80 (F) PN10	99091476	99805572
MAGNA3 D 32-80 (F) PN16	99091481	99805593
MAGNA3 D 32-100 (F) PN10	99091478	99805594
MAGNA3 D 32-100 (F) PN16	99091483	99805595
MAGNA3 D 32-100 F PN6/10	99091478	99805602
MAGNA3 D 32-100 F PN16	99091483	99805603
MAGNA3 D 32-120 F PN6/10	99092742	99805604
MAGNA3 D 32-120 F PN16	99092762	99805605
MAGNA3 D 40-40 F PN6/10	99091480	99805606
MAGNA3 D 40-40 F PN16	99091484	99805607

Control box, configured twin-head pumps

Model D

Pump type	Kit No	
	Model D	
	Head I	Head II
MAGNA3 D 32-40 PN10	99331660	99332174
MAGNA3 D 32-40 PN16	99331675	99332178
MAGNA3 D 32-60 PN10	99331673	99332176
MAGNA3 D 32-60 PN16	99331682	99332277
MAGNA3 D 32-80 PN10	99331678	99332180
MAGNA3 D 32-80 PN16	99332124	99332281
MAGNA3 D 32-100 PN10	99331680	99332197
MAGNA3 D 32-100 PN16	99332126	99332284
MAGNA3 D 32-120 F PN6/10	99332483	99334279
MAGNA3 D 32-120 F PN16	99333708	99334307
MAGNA3 D 40-40 F PN6/10	99331685	99332279
MAGNA3 D 40-40 F PN16	99332127	99332286

Display board

Pos.	Description/ kit No	98148734
-	Display board	1

Kit, cover w. display board (model B, C and D)

Pos.	Description/ kit No	99032834
164	Cover	
-	Display board	
163f	Screw	2
164a	Screw	3

MAGNA3 plug-connected versions

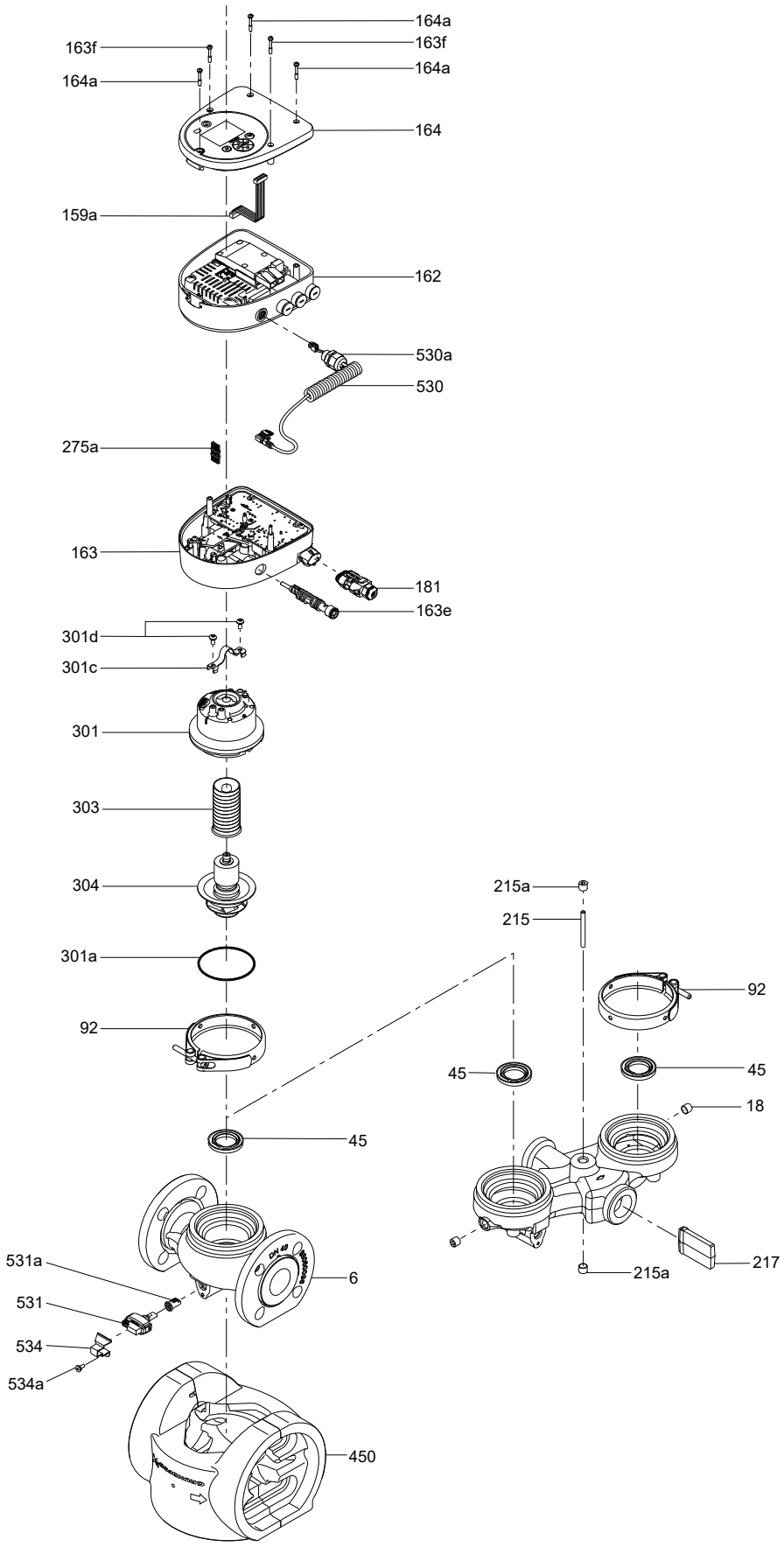

Insulation shells

Description	Kit No
DN25/DN32 180	*98615808*
DN32-100 F 220	*98615809*
DN40-60 F220	*98615810*
DN32 220	*98159366*
DN40 220/250	*98159368*

O-ring

Pos.	Description/ kit No	***98357755***
301a	O-ring	1

Plug

Pos.	Description/Kit No	
		98284561
181	Plug (ALPHA)	1

Connector plug

Pos.	Description/ kit No	***98357861***
-	3-Pole connector plug angled	2
-	3-pole connector plug up-right	1
-	4-pole connector plug angled w/wire	1

Pump housing

Model A, B, C and D

Pump DN size	Size			Kit no.
	PN6	PN10	PN16	
MAGNA3 DN32	•	•	•	*98660062*

Service pump housings are only available for flanged versions.

Pump head

All models
Including shaft with impeller and rotor can

Pos.	Description	Kit No/pcs
	DN 25-32	*98419522*
	DN 40-40/60	*98357754*
92	Clamp	1
301	Pump head	1
301a	O-ring	1
301c	Leaf spring	1
301d	Screw	2

Sealing cap

Pos.	Description	Kit No	Bulk No (10 pcs)
531a	Sealing cap	*98613455*	*98708139*

Sensor with cable

Pos.	Description/ kit No	1 pcs	Bulk (10 pcs,)
		99313067	**99313072**
530	**Cable**	**1**	**10**
530a	**Cable gland**	**1**	**10**
531	Sensor	1	10
531a	Sealing cap	1	10
534	Bracket	1	10
534a	Screw	1	10

Two-way flap

Pos.	Description	Kit No/pcs
	DN 32	*96407253*
	DN 40	*96407254*
215	Pin	1
217	Rubber flap	1

MAGNA3 plug-connected versions

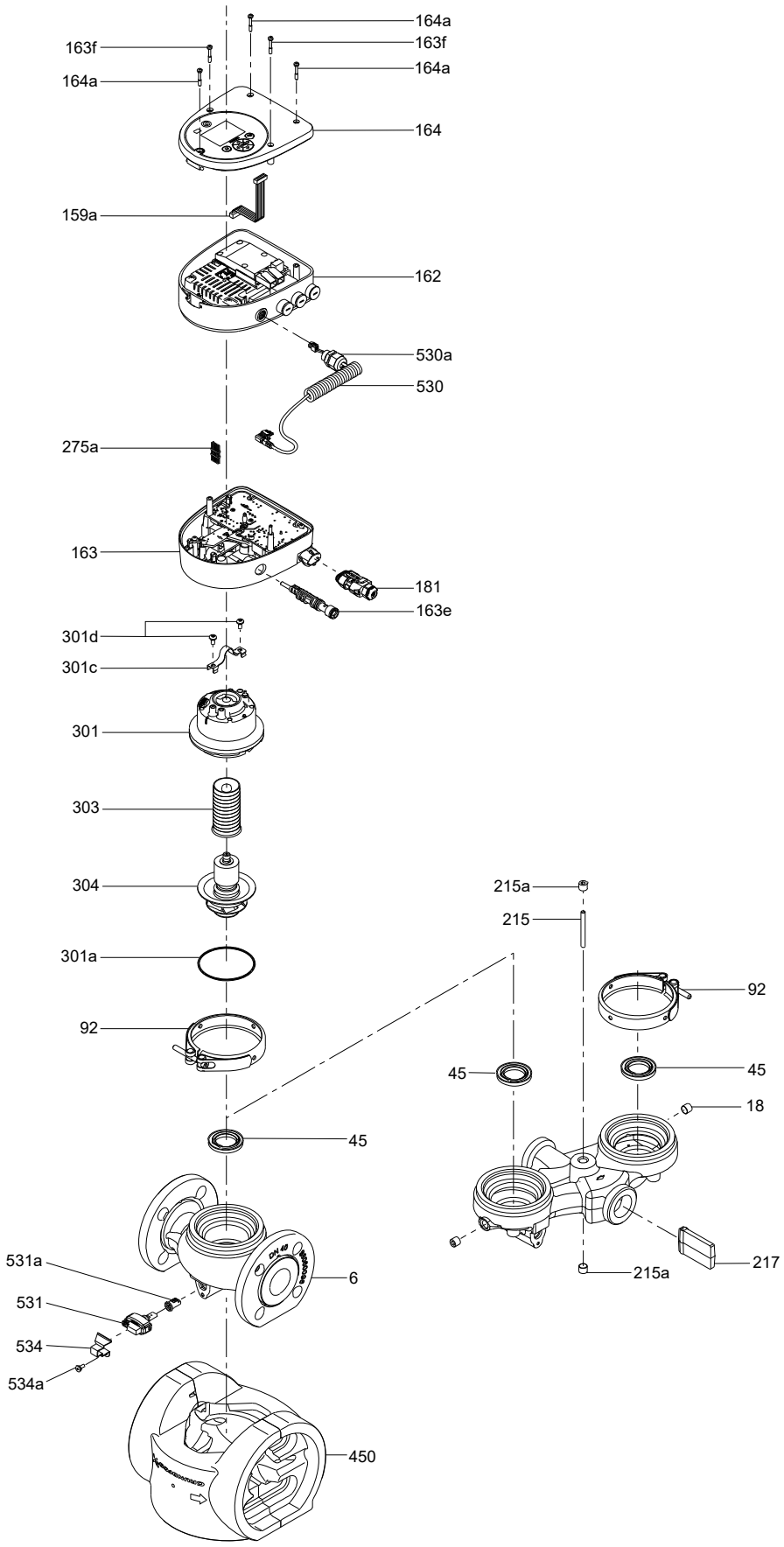

NAMREG MAGNA3 w. conduit box

Model A and D

Clamp

Pos.	Description /Kit No	*98700283*
92	Clamp with screw	1

Configured control box complete

Pump type	Kit No
	Model A and D
MAGNA3 32-60	*99610484*
MAGNA3 32-100	*99610462*

Pos.	Description/Kit No	
-	Control box	1
301b	EMC protector	1
-	Nameplate (to be filled out)	1
531	Sensor cable w. sensor	1
-	Pen	1
163e	Locking pin	1

O-ring

Pos.	Description/Kit No	*98700281*
301a	O-ring	1

Pump head

Pos.	Description	Kit No/pcs
	DN 25-32	*98460815*
92	Clamp	1
301	Pump head	1
301a	O-ring	1
301c	Leaf spring	1
301d	Screw	2

Sealing cap

Pos.	Description	Kit No	Bulk No (10 pcs)
531a	Sealing cap	*98613455*	*98708139*

Sensor with cable

Pos.	Description/Kit No	1 pcs	Bulk (10 pcs,)
		99313067	*99313072*
530	**Cable**	**1**	**10**
530a	**Cable gland**	**1**	**10**
531	Sensor	1	10
531a	Sealing cap	1	10
534	Bracket	1	10
534a	Screw	1	10

MAGNA3 plug-connected versions, NAMREG

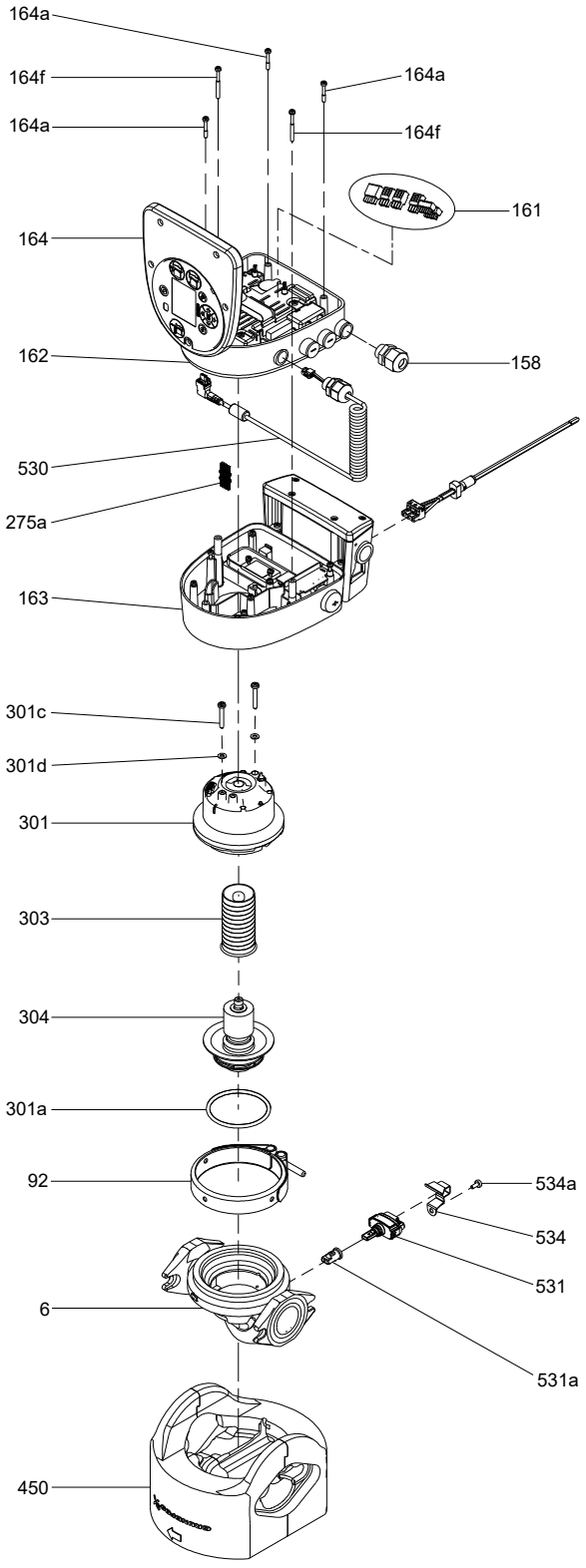

MAGNA3 terminal-connected versions

Clamp

Pos.	Description/Kit No	*98148759*
92	Clamp with screw	1

Connector plug

Pos.	Description/Kit No	*98357861*
-	3-Pole connector plug angled	2
-	3-pole connector plug up-right	1
-	4-pole connector plug angled w/wire	1

Control box, unconfigured

Pos.	Description/Kit No	750W	1600W
		98859585	*88595869*
-	Control box	1	1
163a	Screw	2	2
163d	Screw	1	1
301b	Protector (EMC)	1	1

Control box, configured single-head pumps

Pump type	Kit No	
	Model A,B,C	Model D
MAGNA3 40-80 F (N) PN6/10	*99092713*	*99332331*
MAGNA3 40-80 F PN16	*99092716*	*99332346*
MAGNA3 40-100 (N) PN6/10	*99092714*	*99332332*
MAGNA3 40-100 F PN 16	*99092718*	*99332350*
MAGNA3 40-120 (N) PN6/10	*99092717*	*99332348*
MAGNA3 40-120 F PN 16	*99092723*	*99332391*
MAGNA3 40-150 (N) PN6/10	*99092724*	*99332392*
MAGNA3 40-150 F PN 16	*99092735*	*99332463*
MAGNA3 40-180 (N) PN6/10	*99092732*	*99332458*
MAGNA3 40-180 F PN 16	*99092749*	*99333668*
MAGNA3 50-40 F (N) PN6/10	*99092715*	*99332343*
MAGNA3 50-40 F PN16	*99092719*	*99332358*
MAGNA3 50-60 (N) PN6/10	*99092720*	*99332360*
MAGNA3 50-60 F PN 16	*99092726*	*99332435*
MAGNA3 50-80 F (N) PN6/10	*99092722*	*99332389*
MAGNA3 50-80 F PN16	*99092731*	*99332453*
MAGNA3 50-100 (N) PN6/10	*99092725*	*99332433*
MAGNA3 50-100 F PN 16	*99092736*	*99332465*
MAGNA3 50-120 (N) PN6/10	*99092728*	*99332438*
MAGNA3 50-120 F PN 16	*99092743*	*99332484*
MAGNA3 50-150 (N) PN6/10	*99092739*	*99332472*
MAGNA3 50-150 F PN 16	*99092759*	*99333703*
MAGNA3 50-180 (N) PN6/10	*99092760*	*99333704*
MAGNA3 50-180 F PN 16	*99092772*	*99333759*
MAGNA3 65-40 F (N) PN6/10	*99092721*	*99332386*
MAGNA3 65-40 F PN16	*99092729*	*99332441*
MAGNA3 65-60 (N) PN6/10	*99092727*	*99332437*
MAGNA3 65-60 F PN 16	*99092740*	*99332478*
MAGNA3 65-80 F (N) PN6/10	*99092733*	*99332460*
MAGNA3 65-80 F PN16	*99092750*	*99333669*
MAGNA3 65-100 (N) PN6/10	*99092737*	*99332467*
MAGNA3 65-100 F PN 16	*99092756*	*99333689*
MAGNA3 65-120 (N) PN6/10	*99092746*	*99333498*
MAGNA3 65-120 F PN 16	*99092764*	*99333710*
MAGNA3 65-150 (N) PN6/10	*99092574*	*99334811*
MAGNA3 65-150 F PN 16	*99092582*	*99334833*
MAGNA3 80-40 F (N) PN6	*99092730*	*99332442*
MAGNA3 80-40 F (N) PN10	*99092734*	*99332462*
MAGNA3 80-40 F PN16	*99092745*	*99333486*
MAGNA3 80-60 (N) PN6	*99092738*	*99332469*
MAGNA3 80-60 (N) PN10	*99092744*	*99333497*
MAGNA3 80-60 F PN 16	*99092758*	*99333692*
MAGNA3 80-80 F (N) PN6	*99092748*	*99333664*
MAGNA3 80-80 F (N) PN10	*99092754*	*99333686*
MAGNA3 80-80 F PN16	*99092766*	*99333718*
MAGNA3 80-100 F PN6	*99092573*	*99334810*
MAGNA3 80-100 F PN10	*99092575*	*99334823*
MAGNA3 80-100 F PN16	*99092579*	*99334829*
MAGNA3 80-120 F PN6	*99092577*	*99334826*
MAGNA3 80-120 F PN10	*99092581*	*99334832*
MAGNA3 80-120 F PN16	*99092585*	*99334839*
MAGNA3 100-40 F (N) PN6	*99092747*	*99333561*
MAGNA3 100-40 F (N) PN10	*99092753*	*99333685*
MAGNA3 100-40 F PN16	*99092765*	*99333713*
MAGNA3 100-60 (N) PN6	*99092757*	*99333690*
MAGNA3 100-60 (N) PN10	*99092763*	*99333708*
MAGNA3 100-60 F PN 16	*99092771*	*99333728*
MAGNA3 100-80 F PN6	*99092576*	*99334825*
MAGNA3 100-80 F PN10	*99092578*	*99334828*
MAGNA3 100-80 F PN16	*99092584*	*99334837*
MAGNA3 100-100 F PN6	*99092580*	*99334831*
MAGNA3 100-100 F PN10	*99092583*	*99334835*
MAGNA3 100-100 F PN16	*99092587*	*99334847*
MAGNA3 100-120 F PN6	*99092586*	*99334844*
MAGNA3 100-120 F PN10	*99092588*	*99334852*
MAGNA3 100-120 F PN16	*99092589*	*99334864*

Pos.	Description/Kit No	*98148727*
164	Control box cover	1
164a	Screw	5

Display board (model A only)

Pos.	Description/Kit No	*98148734*
-	Display board	1

Kit, cover w. display board (model B, C and D)

Pos.	Description/Kit No	*99338995*
164	Cover	
-	Display board	
163f	Screw	2
164a	Screw	3

Insulation shells

Description	Kit No
DN32 220	*98159366*
DN40 220/280	*98159368*
DN50 240/280	*98159367*
DN65 340	*98159361*
DN80 360	*98159363*
DN100 450	*98159362*

O-ring

Pos.	Description/Kit No	***98148761***
301a	O-ring	1

MAGNA3 terminal-connected versions

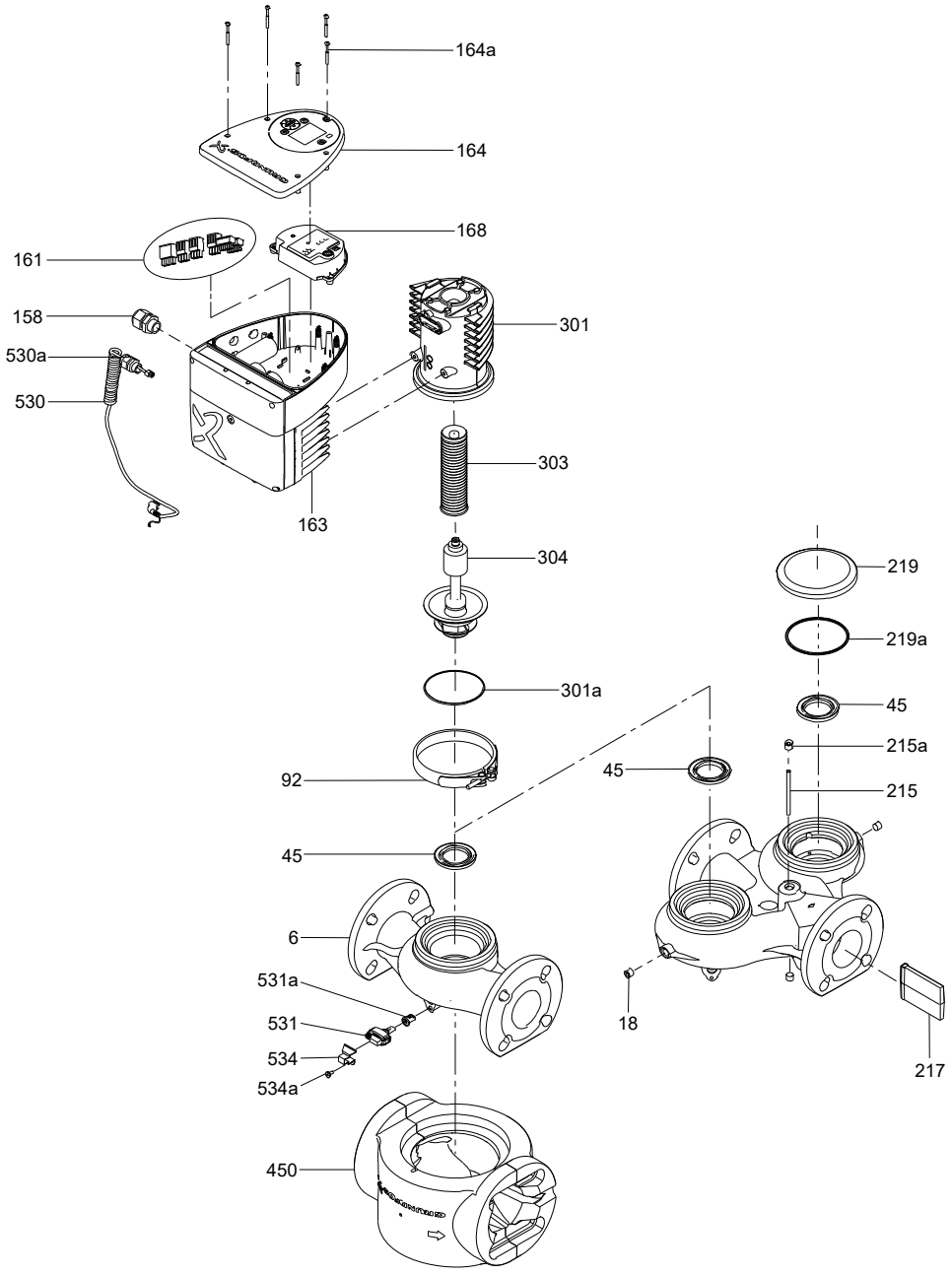

Control box, configured twin-head pumps Model A,B,C

Pump type	Kit No	
	Model A,B,C	
	Head I	Head II
MAGNA3 D 40-80 F (N) PN6/10	99092741	99805610
MAGNA3 D 40-80 F PN16	99092761	99805611
MAGNA3 D 40-100 (N) PN6/10	99092751	99805612
MAGNA3 D 40-100 F PN 16	99092768	99805613
MAGNA3 D 40-120 (N) PN6/10	99092767	99805614
MAGNA3 D 40-120 F PN 16	99092775	99805615
MAGNA3 D 40-150 (N) PN6/10	99092776	99805616
MAGNA3 D 40-150 F PN 16	99092786	99805617
MAGNA3D 40-180 (N) PN6/10	99092755	99805618
MAGNA3 D 40-180 F PN 16	99092798	99805619
MAGNA3 D 50-40 F (N) PN6/10	99092752	99805620
MAGNA3 D 50-40 F PN16	99092769	99805621
MAGNA3 D 50-60 (N) PN6/10	99092770	99805622
MAGNA3 D 50-60 F PN 16	99092778	99805623
MAGNA3 D 50-80 F (N) PN6/10	99092774	99805624
MAGNA3 D 50-80 F PN16	99092783	99805625
MAGNA3 D 50-100 (N) PN6/10	99092777	99805626
MAGNA3 D 50-100 F PN 16	99092787	99805627
MAGNA3 D 50-120 (N) PN6/10	99092780	99805629
MAGNA3 D 50-120 F PN 16	99092792	99805630
MAGNA3 D 50-150 (N) PN6/10	99092790	99805631
MAGNA3 D 50-150 F PN 16	99092805	99805632
MAGNA3 D 50-180 (N) PN6/10	99092806	99805633
MAGNA3 D 50-180 F PN 16	99092812	99805634
MAGNA3 D 65-40 F (N) PN6/10	99092773	99805635
MAGNA3 D 65-40 F PN16	99092781	99805636
MAGNA3 D 65-60 (N) PN6/10	99092779	99805637
MAGNA3 D 65-60 F PN 16	99092791	99805638
MAGNA3 D 65-80 F (N) PN6/10	99092784	99805639
MAGNA3 D 65-80 F PN16	99092799	99805640
MAGNA3 D 65-100 (N) PN6/10	99092788	99805641
MAGNA3 D 65-100 F PN 16	99092802	99805642
MAGNA3 D 65-120 (N) PN6/10	99092795	99805643
MAGNA3 D 65-120 F PN 16	99092808	99805644

Pump type	Kit No	
	Model A,B,C	
	Head I	Head II
MAGNA3 D 65-150 (N) PN6/10	99092591	99805645
MAGNA3 D 65-150 F PN 16	99092599	99805646
MAGNA3 D 80-40 F (N) PN6	99092782	99805647
MAGNA3 D 80-40 F (N) PN10	99092785	99805648
MAGNA3 D 80-40 F PN16	99092794	99805649
MAGNA3 D 80-60 (N) PN6	99092789	99805650
MAGNA3 D 80-60 (N) PN10	99092793	99805651
MAGNA3 D 80-60 F PN 16	99092804	99805652
MAGNA3 D 80-80 F (N) PN6	99092797	99805653
MAGNA3 D 80-80 F (N) PN10	99092801	99805654
MAGNA3 D 80-80 F PN16	99092810	99805655
MAGNA3 D 80-100 F PN6	99092590	99805656
MAGNA3 D 80-100 F PN10	99092592	99805657
MAGNA3 D 80-100 F PN16	99092596	99805658
MAGNA3 D 80-120 F PN6	99092594	99805659
MAGNA3 D 80-120 F PN10	99092598	99805660
MAGNA3 D 80-120 F PN16	99092602	99805661
MAGNA3 D 100-40 F (N) PN6	99092796	99805662
MAGNA3 D 100-40 F (N) PN10	99092800	99805663
MAGNA3 D 100-40 F PN16	99092809	99805664
MAGNA3 D 100-60 (N) PN6	99092803	99805665
MAGNA3 D 100-60 (N) PN10	99092807	99805666
MAGNA3 D 100-60 F PN 16	99092811	99805667
MAGNA3 D 100-80 F PN6	99092593	99805668
MAGNA3 D 100-80 F PN10	99092595	99805669
MAGNA3 D 100-80 F PN16	99092601	99805670
MAGNA3 D 100-100 F PN6	99092597	99805671
MAGNA3 D 100-100 F PN10	99092600	99805672
MAGNA3 D 100-100 F PN16	99092604	99805673
MAGNA3 D 100-120 F PN6	99092603	99805674
MAGNA3 D 100-120 F PN10	99092605	99805675
MAGNA3 D 100-120 F PN16	99092606	99805676

Pos.	Description/Kit No	***98148727***
164	Control box cover	1
164a	Screw	5

MAGNA3 terminal-connected versions

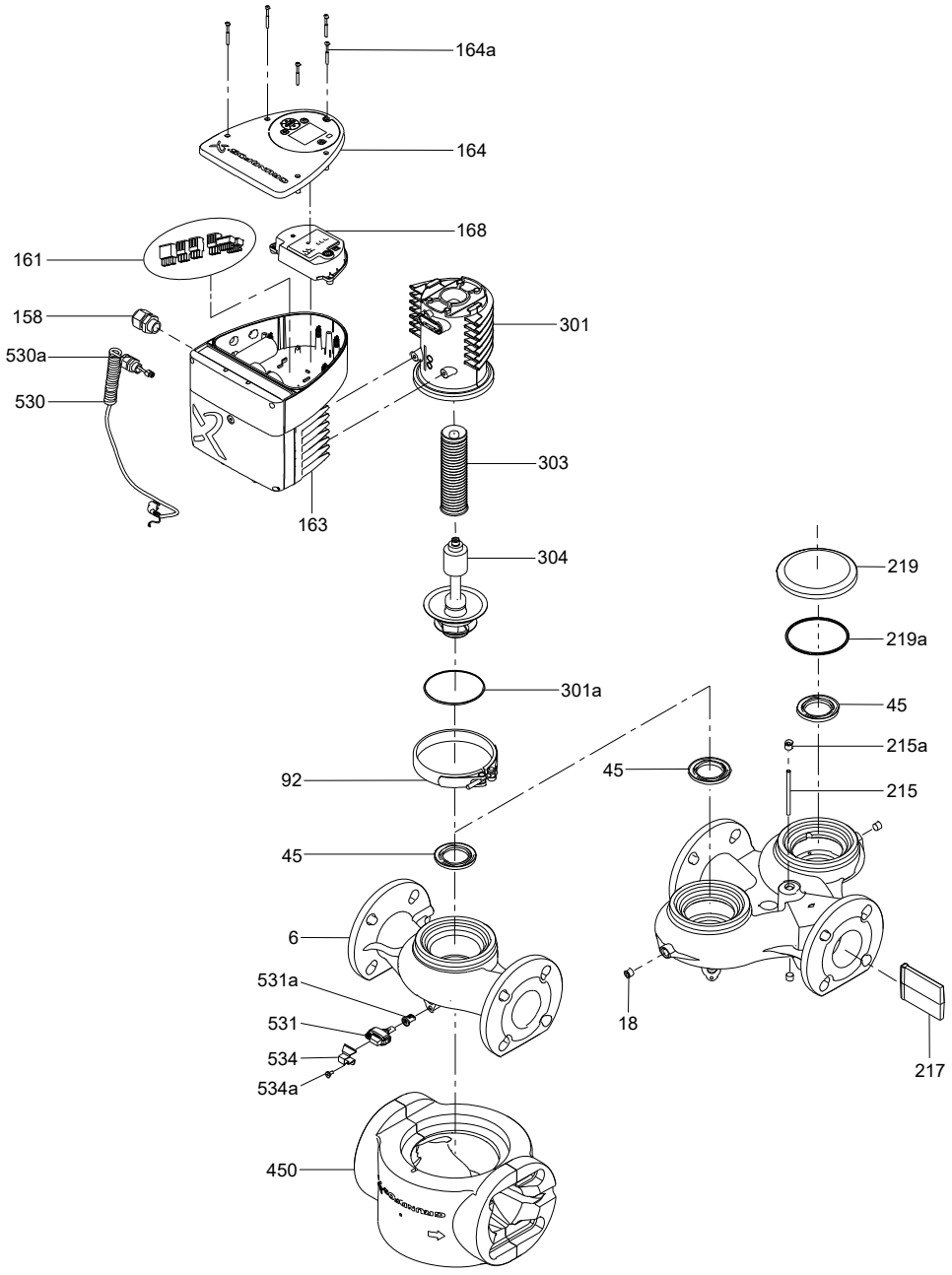

Control box, configured twin-head pumps Model D

Pump type	Kit No	
	Model D	
	Head I	Head II
MAGNA3 D 40-80 F (N) PN6/10	99332480	99334278
MAGNA3 D 40-80 F PN16	99333706	99334303
MAGNA3 D 40-100 (N) PN6/10	99333670	99334280
MAGNA3 D 40-100 F PN 16	99333722	99334311
MAGNA3 D 40-120 (N) PN6/10	99333721	99334310
MAGNA3 D 40-120 F PN 16	99333764	99334455
MAGNA3 D 40-150 (N) PN6/10	99333765	99334456
MAGNA3 D 40-150 F PN 16	99333795	99334500
MAGNA3D 40-180 (N) PN6/10	99333688	99337036
MAGNA3 D 40-180 F PN 16	99333860	99334529
MAGNA3 D 50-40 F (N) PN6/10	99333672	99334281
MAGNA3 D 50-40 F PN16	99333723	99334323
MAGNA3 D 50-60 (N) PN6/10	99333725	99334450
MAGNA3 D 50-60 F PN 16	99333768	99334462
MAGNA3 D 50-80 F (N) PN6/10	99333763	99334454
MAGNA3 D 50-80 F PN16	99333778	99334480
MAGNA3 D 50-100 (N) PN6/10	99333766	99334457
MAGNA3 D 50-100 F PN 16	99333799	99334502
MAGNA3 D 50-120 (N) PN6/10	99333772	99334474
MAGNA3 D 50-120 F PN 16	99333807	99334519
MAGNA3 D 50-150 (N) PN6/10	99333805	99334513
MAGNA3 D 50-150 F PN 16	99334240	99334771
MAGNA3 D 50-180 (N) PN6/10	99334242	99334784
MAGNA3 D 50-180 F PN 16	99334277	99334806
MAGNA3 D 65-40 F (N) PN6/10	99333761	99334453
MAGNA3 D 65-40 F PN16	99333773	99334476
MAGNA3 D 65-60 (N) PN6/10	99333770	99334460
MAGNA3 D 65-60 F PN 16	99333806	99092791
MAGNA3 D 65-80 F (N) PN6/10	99333781	99334495
MAGNA3 D 65-80 F PN16	99333861	99334531
MAGNA3 D 65-100 (N) PN6/10	99333801	99334505
MAGNA3 D 65-100 F PN 16	99334236	99334545
MAGNA3 D 65-120 (N) PN6/10	99333812	99334526
MAGNA3 D 65-120 F PN 16	99334258	99334789
MAGNA3 D 65-150 (N) PN6/10	99335000	99335052
MAGNA3 D 65-150 F PN 16	99335026	99335080
MAGNA3 D 80-40 F (N) PN6	99333775	99334479
MAGNA3 D 80-40 F (N) PN10	99333793	99334498
MAGNA3 D 80-40 F PN16	99333811	99334524
MAGNA3 D 80-60 (N) PN6	99333803	99334509
MAGNA3 D 80-60 (N) PN10	99333810	99334520
MAGNA3 D 80-60 F PN 16	99334238	99334770
MAGNA3 D 80-80 F (N) PN6	99333859	99334528
MAGNA3 D 80-80 F (N) PN10	99334235	99334543
MAGNA3 D 80-80 F PN16	99334273	99334803
MAGNA3 D 80-100 F PN6	99334867	99335050
MAGNA3 D 80-100 F PN10	99335003	99335064
MAGNA3 D 80-100 F PN16	99335009	99335070
MAGNA3 D 80-120 F PN6	99335007	99335068
MAGNA3 D 80-120 F PN10	99335024	99335078
MAGNA3 D 80-120 F PN16	99335034	99335150
MAGNA3 D 100-40 F (N) PN6	99333855	99334527
MAGNA3 D 100-40 F (N) PN10	99334173	99334532
MAGNA3 D 100-40 F PN16	99334259	99334792
MAGNA3 D 100-60 (N) PN6	99334237	99334546
MAGNA3 D 100-60 (N) PN10	99334253	99334788
MAGNA3 D 100-60 F PN 16	99334276	99334804
MAGNA3 D 100-80 F PN6	99335004	99335066
MAGNA3 D 100-80 F PN10	99335008	99335069
MAGNA3 D 100-80 F PN16	99335029	99335050
MAGNA3 D 100-100 F PN6	99335011	99335073
MAGNA3 D 100-100 F PN10	99335028	99335148
MAGNA3 D 100-100 F PN16	99335040	99335152
MAGNA3 D 100-120 F PN6	99335036	99335151
MAGNA3 D 100-120 F PN10	99335044	99335163
MAGNA3 D 100-120 F PN16	99335045	99335164

Pos.	Description/Kit No	98148727
164	Control box cover	1
164a	Screw	5

Sealing cap

Pos.	Description	Kit No	Bulk No (10 pcs)	Bulk No (100 pcs)
531a	Sealing cap	98613455	98708139	98937750

Pump head

Pos.	Description	Kit No/pcs	
	Model	A+B+C	D
	DN 32-120	98148736	98148737
	DN 40-80/100	98148738	98148739
	DN 40-120/150/180	98148740	98148741
	DN 50-40/60/80	98148742	98148743
	DN 50-100	98980702	98980689
	DN 50-120	98148744	98148745
	DN 50-150/180	98148746	98148747
	DN 65-40/60	98148748	98148749
	DN 65-80/100/120	98148750	98148751
	DN 65-150	98148752	98148753
	DN 80-40/60	98148754	98148755
	DN 80-80/100/120	98148756	98148757
	DN 100-40/60/80/100/120		
92	Clamp		1
163a	Screw		2
163d	Screw		1
301	Pump head		1
301a	O-ring		1
301b	Gasket (EMC)		1

Sensor with cable

Pos.	Description/Kit No	1 pcs	Bulk (10 pcs,)
		99313067	*99313072*
530	Cable	1	10
530a	Cable gland	1	10
531	Sensor	1	10
531a	Sealing cap	1	10
534	Bracket	1	10
534a	Screw	1	10

MAGNA3 terminal-connected versions

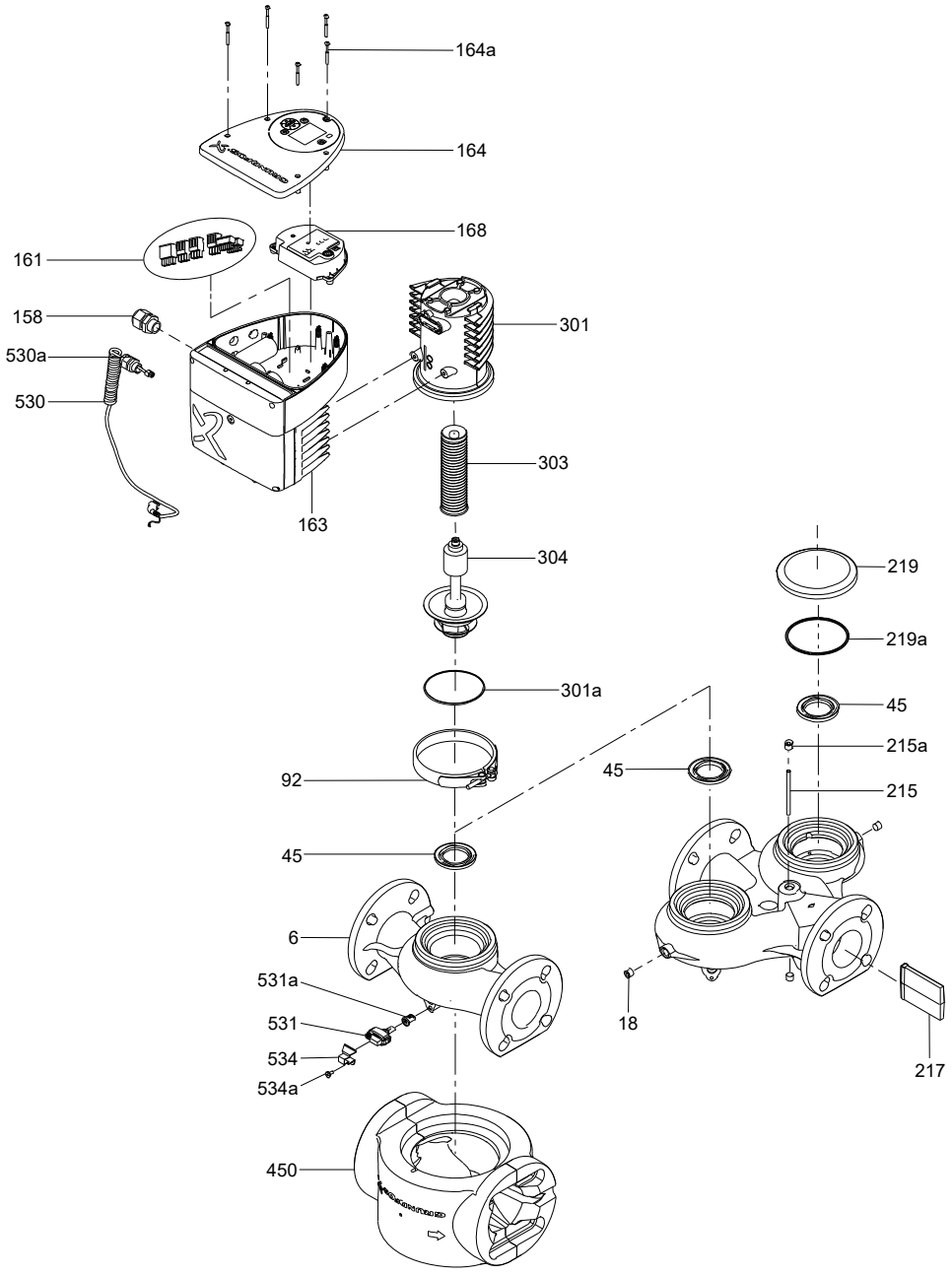

Two-way flap

Pos.	Description	Kit No/pcs
	Model	**A**
	DN 32-	*96407253*
	DN 40-	*96407254*
	DN 50-	*96407255*
	DN 65-	*96407256*
	DN 80	*96407257*
	DN 100	*96407258*

Connector plug

Pos.	Description/Kit No	***98357861***
-	3-Pole connector plug angled	2
-	3-pole connector plug up-right	1
-	4-pole connector plug angled w/wire	1

Pump housing

Note: pump houses for DN 40, port to port length 220 mm and DN 50, port to port length 240 mm are not available.

Model A,B,C and D

Pump DN size	Size			Kit no.
	PN6	PN10	PN16	
MAGNA3 DN32	•	•	•	*98660062*
MAGNA3 DN40	•	•	•	*98660063*
MAGNA3 DN50	•	•	•	*98660064*
MAGNA3 DN65	•	•	•	*98660065*
MAGNA3 DN80	•			*98660066*
MAGNA3 DN80		•	•	*98660067*
MAGNA3 DN100	•			*98660068*
MAGNA3 DN100		•	•	*98660069*
MAGNA3 D DN32	•	•	•	*98660078*
MAGNA3 D DN40	•	•	•	*98660079*
MAGNA3 D DN50	•	•	•	*98660080*
MAGNA3 D DN65	•	•	•	*98660081*
MAGNA3 D DN80	•			*98660082*
MAGNA3 D DN80		•	•	*98660083*
MAGNA3 D DN100	•			*98660084*
MAGNA3 D DN100		•	•	*98660085*

MAGNA3 terminal-connected versions

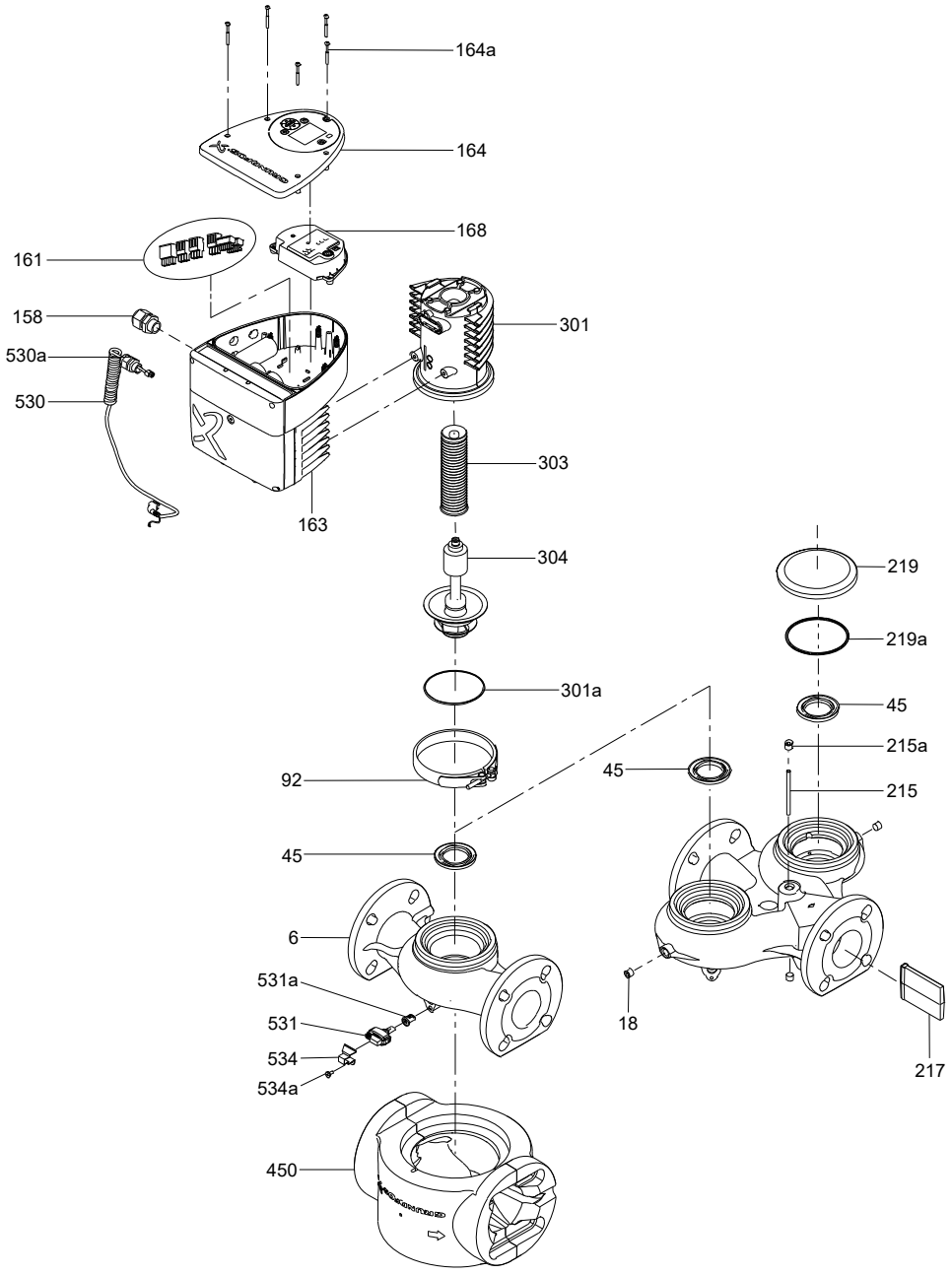

NAMREG MAGNA3 terminal-connected versions

Additional kits

Pos.	Description	Kit No/pcs
-	Terminal connector plugs	*98607782*
-	Gasket	*98721416*
-	Cable gland	*98578414*

Clamp

Pos.	Description/ kit No	*98700282*
92	Clamp with screw	1

Control box,unconfigured

Pos.	Description	650W	750W	1600W
	Kit No	*98463326*	*98463324*	*98463322*
163	Control box complete	1	1	1
163a	Screw	2	2	2
163d	Screw	1	1	1
301b	Protector (EMC)	1	1	1

Control box, configured single-head pumps

Pump type	Kit No	
	Model A	Model D
MAGNA3 40-80 115V	*99068772*	*99372335*
MAGNA3 40-80 230V	*99068783*	*99372336*
MAGNA3 40-120 115V	*99068768*	*99372318*
MAGNA3 40-120 230V	*99068769*	*99372321*
MAGNA3 40-180 115V	*99068770*	*99372333*
MAGNA3 40-180 230V	*99068771*	*99372334*
MAGNA3 50-80 115V	*99068786*	*99372341*
MAGNA3 50-80 230V	*99068788*	*99372344*
MAGNA3 50-150 115V	*99068784*	*99372338*
MAGNA3 50-150 230V	*99068785*	*99372339*
MAGNA3 65-120 115V	*99068789*	*99372345*
MAGNA3 65-120 230V	*99068790*	*99372347*
MAGNA3 65-150 230V	*99068791*	*99372349*
MAGNA3 80-100 230V	*99068792*	*99372350*
MAGNA3 100-120 230V	*99068793*	*99372378*

Control box, configured twin-head pumps Model A

Pump type	Kit No
	Head I and head II
MAGNA3 D 65-150 230V	*99068794*
MAGNA3 D 80-100 230V	*99068795*
MAGNA3 D 100-120 230V	*99068796*

Control box, configured twin-head pumps Model D

Pump type	Kit No
	Head I and head II
MAGNA3 D 65-150 230V	*99372381*
MAGNA3 D 80-100 230V	*99372384*
MAGNA3 D 100-120 230V	*99372387*

Insulation shells

Description	Kit No
DN40-xx	*98827415*
DN50-xx	*98827416*
DN65-xx	*98827417*
DN80-xx	*98827418*
DN100-120	*98827419*

O-ring

Pos.	Description/ kit No	*98148761*
301a	O-ring	1

Pump head

Pos.	Description	Kit No/pcs
	MAGNA1 65-120 GF 340 115V	*98460157*
	MAGNA1 40-80 GF 216 115V	*98460170*
	MAGNA1 40-120 GF 216 115V	*98460166*
	MAGNA1 50-80 GF 240 115V	*98460162*
	MAGNA3 50-150 GF 280 115V	*98460159*
	MAGNA3 40-80 GF 216 230V	*98460168*
	MAGNA3 40-120 GF 216 230V	*98460165*
	MAGNA3 50-80 GF 240 230V	*98460161*
	MAGNA3 50-150 GF 280 230V	*98460173*
	MAGNA3 65-120 GF 340 230V	*98460158*
	MAGNA3 65-150 GF 340 230V	*98148752*
	MAGNA3 80-100 GF 360 230V	*98460151*
	MAGNA3 D 65-150 GF 340 230V	*98460154*
92	Clamp	1
163a	Screw	2
163d	Screw	1
301	Pump head	1
301a	O-ring	1
301b	Gasket (EMC protection)	1

Sealing cap

Pos.	Description	Kit No	Bulk No (10 pcs)	Bulk No (100 pcs)
531a	Sealing cap	*98613455*	*98708139*	*98937750*

Sensor with cable

Pos.	Description/ kit No	1 pcs	Bulk (10 pcs,)
		99313067	*99313072*
530	**Cable**	**1**	**10**
530a	**Cable gland**	**1**	**10**
531	Sensor	1	10
531a	Sealing cap	1	10
534	Bracket	1	10
534a	Screw	1	10

Two-way flap

Pos.	Description	Kit No/pcs
	DN 65	*96407256*
	DN 80	*96407257*
	DN 100	*96407258*
215	Pin	1
217	Rubber flap	1

Pump housing
Model A and D

Pump DN size	Size	Kit no.
MAGNA3 GF40	Psi 150	*98660089*
MAGNA3 GF65	Psi 150	*98660090*
MAGNA3 GF100	Psi 150	*98660091*
MAGNA3 D GF100	Psi 150	*98660093*

MAGNA3 terminal-connected versions

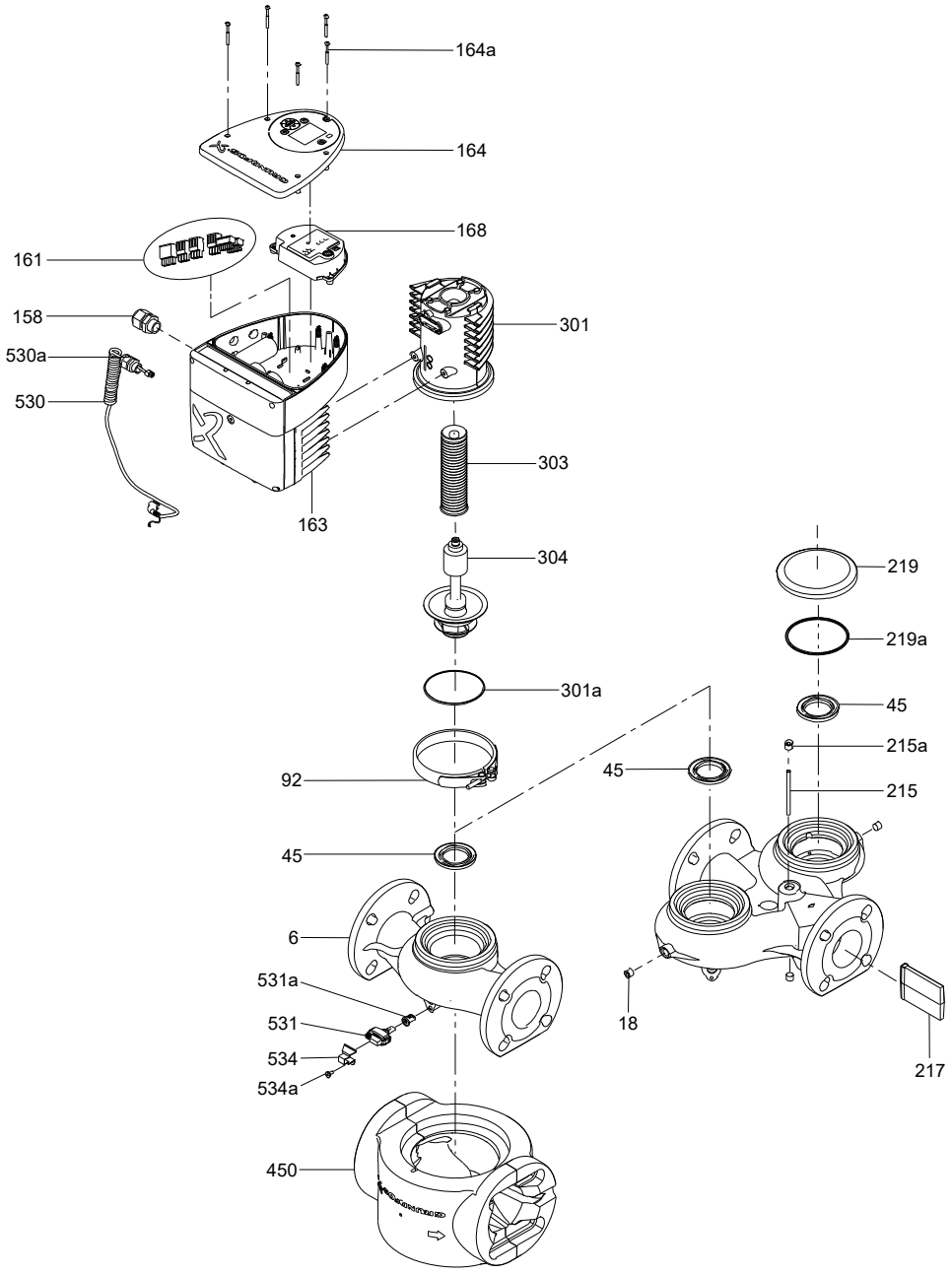

Model E

Pump type	Pump number	Pump head	Terminal box	Seal kit	Drawing
MAGNA 32-120 F	96513625	96513648	96513647	96406940	1
MAGNA 32-120 FN	96513643	96513648	96513647		
MAGNA 32-120 F (D)	96513629	96513648	96513647		
MAGNA 40-120 F	96513626	96513649	96513647		
MAGNA 40-120 FN	96513644	96513649	96513647		
MAGNA 40-120 F (D)	96513640	96513649	96513647		
MAGNA 50-60 F	96513627	96513660	96513647		
MAGNA 50-60 FN	96513645	96513660	96513647		
MAGNA 50-60 F (D)	96513641	96513660	96513647		
MAGNA 50-120 F	96504872	96499918	96500020		
MAGNA 50-120 F (D)	96504874	96499918	96500020		
MAGNA 50-120 FN	96504876	96499918	96500020		
MAGNA 65-60 F	96513628	96513661	96513647		
MAGNA 65-60 FN	96513646	96513661	96513647		
MAGNA 65-60 F (D)	96513642	96513661	96513647		
MAGNA 65-120 F	96504873	96499919	96500020		
MAGNA 65-120 F	96504875	96499919	96500020		
MAGNA 65-120 FN (D)	96504877	96499919	96500020		

Pump head content

Pos.	Description	Drawing 1
12	Split cone	
17	Inspection screw	1
48	Spilt cone nut	1
49	Impeller complete	1
49b	Split cone	1
59	Bearing plate	1
61	Stop ring	1
72a	O-ring/gasket	1
76	Nameplate	1
100	O-ring	1
109	O-ring	1
148	Rotor can with bearing (158a)	1
153	Bearing	1
159	Rubber for bearing	1
172	Shaft with rotor	1
175	Screw	3

Seal kit content

Pos.	Description	Quantity
72a	O-ring 155 x 4	1
	O-ring 113 x 3	1
100	O-ring 18 x 4	1
-	O-ring for pressure sensor 7 x 1.5	1
-	Gasket for pressure sensor30/24 x 2	1
-	Gasket for cylinder part on pressure sensor	1
19d	O-ring for pressure sensor15 x 3	1

Terminal box content

Pos.	Description	Drawing 1
26	Screw	2
163	Terminal box complete	1
175	Screw	3

Model E

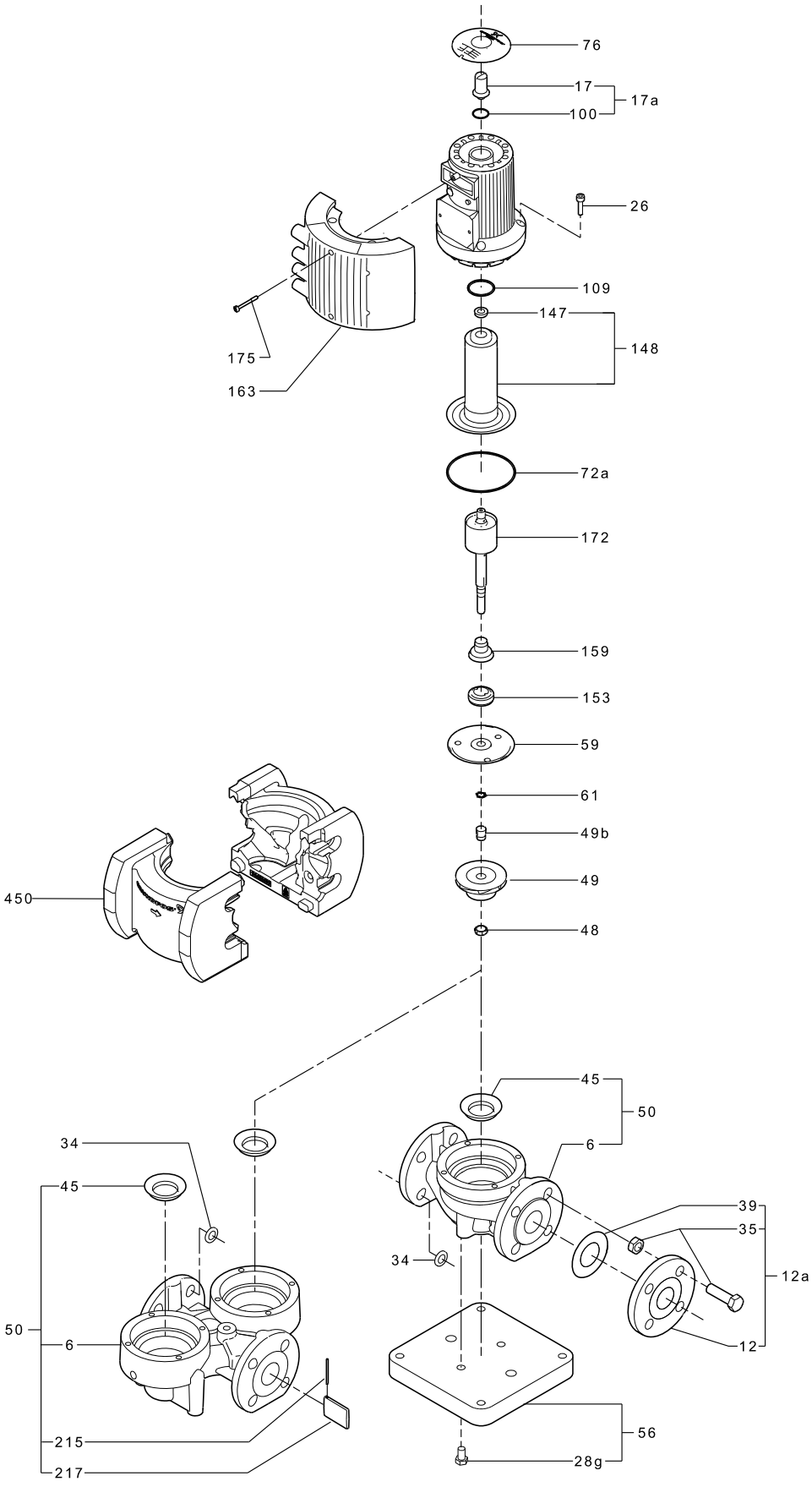
76
17
17a
100
26
109
147
148
175
163
72a
172
159
153
59
61
49b
49
48
450
45
50
6
39
35
34
12a
12
34
45
50
6
215
217
56
28g
TM021119

Pump type	Pump number	Pump head	Terminal box	Drawing
MAGNA 25-40	96817929 96817931	96817961	97752743	
MAGNA 25-60	96281022	96281047	97752743	
MAGNA 25-80	97691265	97752745	97752743	
MAGNA 25-80	97691267			
MAGNA 25-80 N	97691268			
MAGNA 25-80 N	97691269			
MAGNA 25-100	96281015	96281049	97752743	
MAGNA 32-40	96817952 96817953	96817972	97752743	
MAGNA 32-40 N	96817954 96817956	96817972	97752743	
MAGNA 32-60	96281023	96281048	97752743	
MAGNA 32-60 N	96700323 96748695	96281048	97752743	
MAGNA 32-80	97691270	97752747	97752743	2
MAGNA 32-80	97691271			
MAGNA 32-80 N	97691272			
MAGNA 32-80 N	97691273			
MAGNA 32-80 F	97691276			
MAGNA 32-80 F	97691279			
MAGNA 32-100	96281016	96281050	97752743	
MAGNA 32-100 N	96281017	96281050	97752743	
MAGNA 32-100 F	96281018	96281050	97752743	
MAGNA 40-60 F	97691280	97752749	97752743	
MAGNA 40-60 F	97691281			
MAGNA 40-80 F	97711652	97752750	97752743	
MAGNA 40-80 F	97711653			
MAGNA 40-100 F	96281019	96281051	97752743	
MAGNA 40-100 F (D)	96281021	96281051	97752743	
MAGNA 50-100 F	96281020	96281052	97752743	

Cable for twin-head pump

Pos.	Description/ kit No	605779
-	Communication cable	1

Pump head content

Pos.	Description	Drawing 2
12	Split cone	1
49	Impeller complete	1
59	Bearing plate	1
72a	O-ring/gasket	1
109	O-ring	1
148	Rotor can with bearing (158a)	1
153	Bearing	1
172	Shaft with rotor	1

Terminal box content

Pos.	Description	Drawing 2
163	Terminal box complete	1

Model E

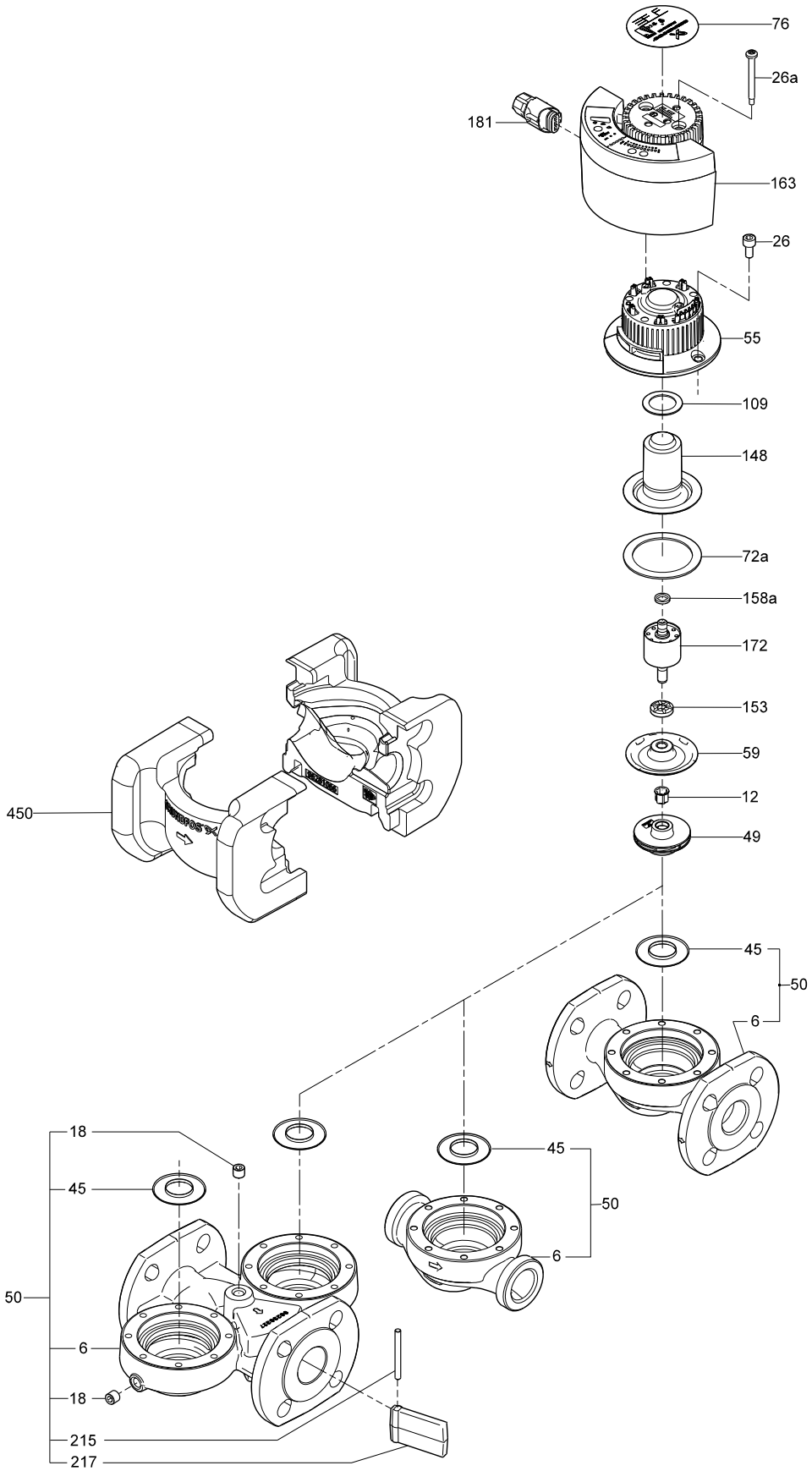
76
26a
181
163
26
55
109
148
72a
158a
172
153
59
12
49
450
45
50
6
18
45
50
6
18
45
50
6
18
215
217
TM030535

41. MG, ML

Model F/H

MG/ML 132, 50/60 Hz

Bearing

Pos.	Description	Type	MG132B2-F1 MG132SB4-F1 MG132MB4-F1		ML132FA
		Pump type	CRN-SF	Other pumps	
		Kit No	*96830797*	*96796600*	*96796642*
153	Ball bearing		1	1	1
154	Ball bearing		1	1	1
157	O-ring		-	1	1
158	Corrugated spring		1	1	1
159	V-ring		1	1	1
159b	V-ring		1	1	1

End shield, drive end

Pos.	Description	Diameter	Ø30		
		Kit No	*96796220*	*96796222*	*96796219*
156b	End shield		-	-	1
	End shield, long		-	1	-
	End shield, long, with grease nipple		1	-	-
159b	V-ring		1	1	1
185	Screw		4	4	4
185b	Nut		4	4	4
186	Drain plug		3	3	3
195a	Grease nipple		1	-	-

End shield, non-drive end

Pos.	Description	Diameter	Ø30
		Kit No	*96932039*
156a	End shield		1
157	O-ring		1
158	Corrugated spring		1
159	V-ring		1
159e	Shaft grounding ring		1
185a	Screw		4
185c	Nut		4

Eyebolt

Pos.	Description/Kit No	*96796712*
189	Eyebolt	2

Fan

Pos.	Description	Diameter	Ø128	Ø158
		Kit No	*96796189*	*96796190*
156	Fan		1	1
100	O-ring		1	1

Flange

Pos.	Description	Type	MG132	ML132
		Flange dimension	FF265	213/215TC
		Kit No	*96796224*	*96830887*
156b	Flange		1	1
159b	V-ring		1	1
185	Screw		4	4
185b	Nut		4	4
186	Drain plug		4	4

Foot

Pos.	Description	Type	MG132S	MG132S/M
		Kit No	*96796592*	*96796596*
191/ 191a	Foot with 2 holes		2	-
191	Right foot with 3 holes		-	1
191a	Left foot with 3 holes		-	1
192	Screw		4	4
192b	Nut		4	4
194	Lock washer		4	4

Grease nipple

Pos.	Description/Kit No	*96796671*
195a/ 195b	Grease nipple	2

Key

Pos.	Description/Kit No	*96796817*
171	Key	1

O-ring

Pos.	Description/Kit No		*96798510*
184	O-ring	200 x 4 mm	2

Shaft grounding ring

Pos.	Description	Dia.	Ø30	Ø40	Ø50
		Kit No	*96932119*	*96932121*	*96932122*
159e	Shaft grounding ring		1	1	1
-	Screw (M3 x 12)		2	2	2

Shaft seal, IP55

Pos.	Description/Kit No	*96843458*
159d	V-ring	2

Shaft seal, IP66

Pos.	Description/Kit No	*96796191*
159d	Gamma ring	2

Terminal board

Pos.	Description/Kit No	*96796657*
176	Terminal board with nut and washers	1
177	Screw	1
-	Connecting bar	3
176d	Terminal	1

Terminal box cover

Pos.	Description/Kit No	*96796215*
164	Terminal box cover with gasket	1
166	Screw	4

MG 132-F/H

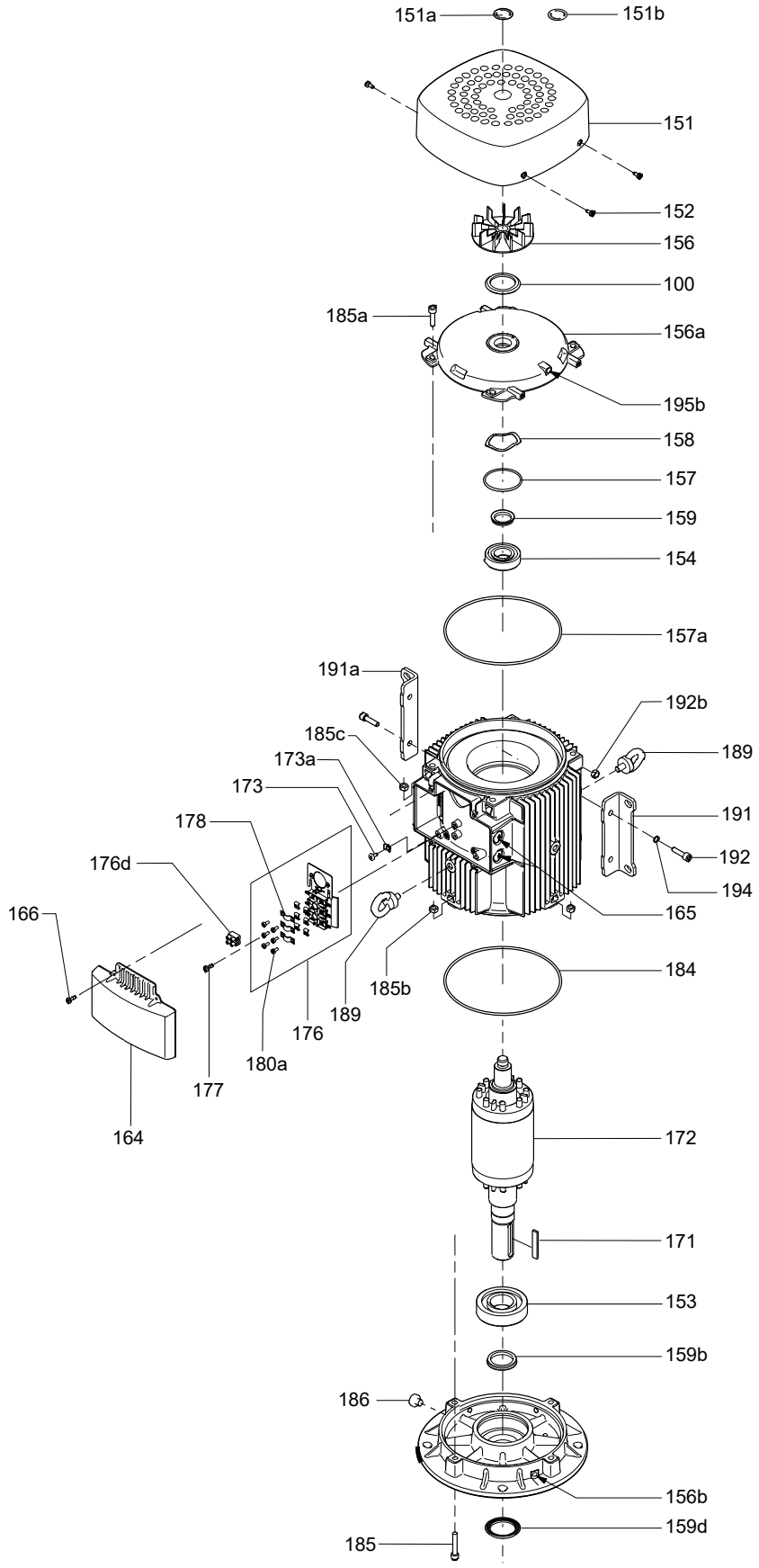
151a
151b
151
152
156
100
185a
156a
195b
158
157
159
154
157a
191a
192b
185c
189
173a
173
191
178
192
176d
194
166
165
184
185b
189
176
180a
177
164
172
171
153
159b
186
156b
159d
185
TM038483

MG/ML 160

Bearing

Pos.	Description	Type	MG160MB2-F1 MG160MD2-F1 MG160LB2-F1 MG160MB4-F1 MG160LB4-F1		ML160AA ML160AB ML160AC
		Pump type	CR, CRN, CRN-S, CRN-SF, CRK, MTR	Other pumps	
		Kit No	*96796676*	*96796674*	*96796676*
153	Ball bearing		1	1	1
154	Ball bearing		1	1	1
157	O-ring		1	1	1
158	Corrugated spring		1	1	1

Bearing cover

Pos.	Description/Kit No	*96796664*
155a/ 155d	Bearing cover	1
182/ 182a	Screw with copper gasket	3

End shield, non-drive end

Pos.	Description	Diameter	Ø45
		Kit No	*96932023*
156a	End shield		1
157	O-ring		1
158	Corrugated spring		1
159e	Shaft grounding ring		1
185a	Screw		4
185c	Nut		4
195b	Grease nipple		1

End shield, drive end

Pos.	Description	Diameter	Ø45
		Kit No	*96796660*
156b	End shield, with grease nipple		1
185	Screw		4
185b	Nut		4
186	Drain plug		3
195a	Grease nipple		1

Eyebolt

Pos.	Description/Kit No	*96796712*
189	Eyebolt	2

Fan, CW

Pos.	Description	Diameter	Ø210	Ø215
		Kit No	*96796654*	*96796650*
156	Fan, CW		1	1
-	Retaining ring		1	1

Fan, CCW

Pos.	Description	Diameter	Ø210	Ø215
		Kit No	*96796648*	*96796652*
156	Fan, CCW		1	1
-	Retaining ring		1	1

Flange

Pos.	Description	Type	MG160	ML160
		Flange dimension	FF300	254/256TC
		Kit No	*96796662*	*96830885*
156b	Flange		1	1
185	Screw		4	4
185b	Nut		4	4
186	Drain plug		4	4
195a	Grease nipple		1	1

Foot

Pos.	Description	Type	MG160L	ML160M
		Kit No	*96796665*	*96796666*
191/ 191a	Foot with 2 holes		2	2
192	Screw		4	4
192b	Nut		4	4
194	Lock washer		4	4

Grease nipple

Pos.	Description/Kit No	*96796671*
195a/ 195b	Grease nipple	2

Key

Pos.	Description/Kit No	*96796817*
171	Key	1

O-ring

Pos.	Description/Kit No		*96798508*
184	O-ring	235 x 4 mm	2

Shaft grounding ring

Pos.	Description	Dia.	Ø30	Ø40	Ø50
		Kit No	*96932119*	*96932121*	*96932122*
159e	Shaft grounding ring		1	1	1
-	Screw (M3 x 12)		2	2	2

Shaft seal, IP55

Pos.	Description/Kit No	*96843459*
159d	V-ring	2

Shaft seal, IP66

Pos.	Description/Kit No	*96796191*
159d	Gamma ring	2

Terminal board

Pos.	Description/Kit No	*96796657*
176	Terminal board with nut and washers	1
177	Screw	1
-	Connecting bar	3
176d	Terminal	1

Terminal box cover

Pos.	Description/Kit No	*96796659*
164	Terminal box cover with gasket	1
166	Screw	4

MG 160/180-F/H

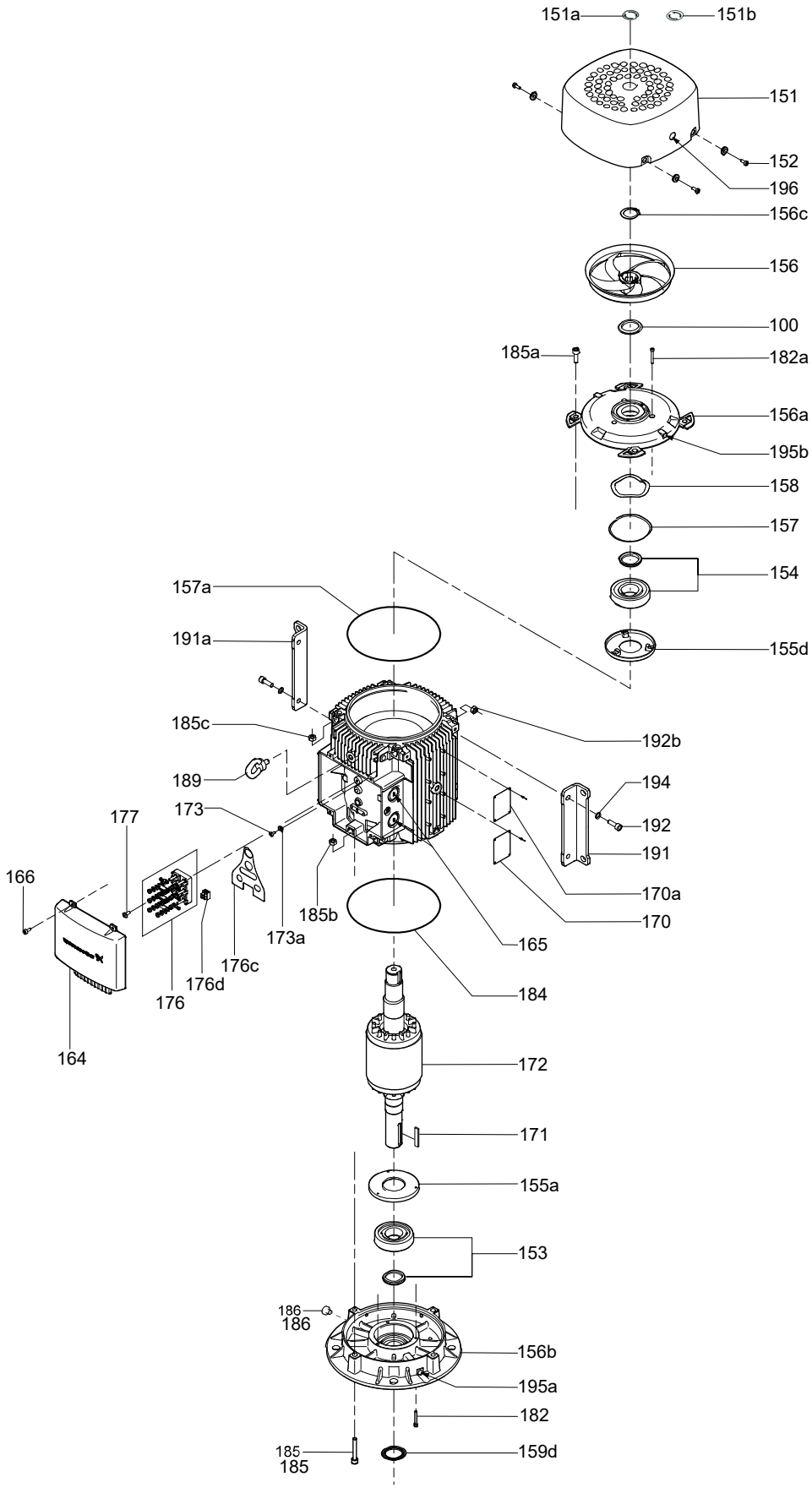
151a
151b
151
152
196
156c
156
100
185a
182a
156a
195b
158
157
154
155d
157a
191a
185c
192b
189
194
173
177
192
191
166
170a
185b
170
173a
165
176c
176d
184
176
164
172
171
155a
153
186
186
156b
195a
182
185
185
159d
TM038485

MG/ML 180

Bearing

Pos.	Description	Type	MG180MB2-F1		ML180AA
		Pump type	CR, CRN, CRN-S, CRN-SF, CRK, MTR	Other pumps	
		Kit No	96796812	96796811	96796812
153	Ball bearing		1	1	1
154	Ball bearing		1	1	1
158	Corrugated spring		1	1	1

Bearing cover

Pos.	Description/Kit No	96796809
155a/ 155d	Bearing cover	1
182/ 182a	Screw with copper gasket	3

End shield, non-drive end

Pos.	Description	Diameter	Ø50
		Kit No	96932040
156a	End shield		1
158	Corrugated spring		1
159e	Shaft grounding ring		1
185a	Screw		4
185c	Nut		4
195b	Grease nipple		1

End shield, drive end

Pos.	Description	Diameter	Ø50
		Kit No	96796805
156b	End shield, with grease nipple		1
185	Screw		4
185b	Nut		4
186	Drain plug		3
195a	Grease nipple		1

Eyebolt

Pos.	Description/Kit No	96796712
189	Eyebolt	2

Fan, CW

Pos.	Description	Diameter	Ø240	Ø270
		Kit No	96796790	96796791
156	Fan, CW		1	1
-	Retaining ring		1	1

Fan, CCW

Pos.	Description	Diameter	Ø240	Ø270
		Kit No	96796716	96796718
156	Fan, CCW		1	1
-	Retaining ring		1	1

Flange

Pos.	Description	Type	MG180	ML180
		Flange dimension	FF300	284/286TSC
		Kit No	96796807	96831195
156b	Flange		1	1
185	Screw		4	4
185b	Nut		4	4
186	Drain plug		4	4
195a	Grease nipple		1	1

Foot

Pos.	Description	Type	ML180M/L
		Kit No	96796804
191	Right foot with 3 holes		1
191a	Left foot with 3 holes		1
192	Screw		4
192b	Nut		4
194	Lock washer		4

Grease nipple

Pos.	Description/Kit No	96796671
195a/ 195b	Grease nipple	2

O-ring

Pos.	Description/Kit No		96798508
184	O-ring	235 x 4 mm	2

Key

Pos.	Description/Kit No	96796817
171	Key	1

Shaft grounding ring

Pos.	Description	Dia.	Ø30	Ø40	Ø50
		Kit No	96932119	96932121	96932122
159e	Shaft grounding ring		1	1	1
-	Screw (M3 x 12)		2	2	2

Shaft seal, IP55

Pos.	Description/Kit No	96843460
159d	V-ring	2

Shaft seal, IP66

Pos.	Description/Kit No	96796802
159d	Gamma ring	2

Terminal board

Pos.	Description/Kit No	96796657
176	Terminal board with nut and washers	1
177	Screw	1
-	Connecting bar	3
176d	Terminal	1

Terminal box cover

Pos.	Description/Kit No	96796659
164	Terminal box cover with gasket	1
166	Screw	4

MG 160/180-F/H

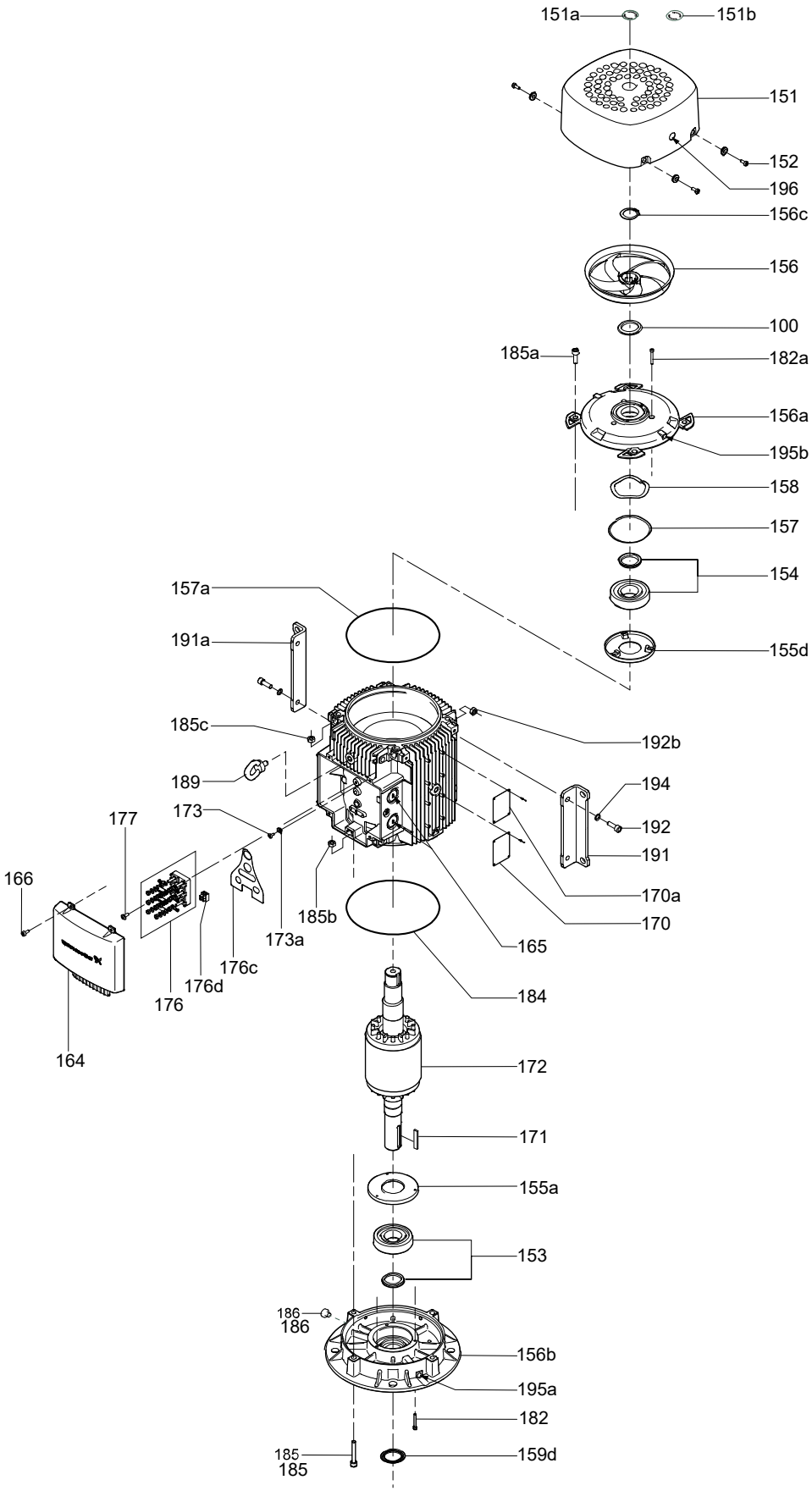
151a
151b
151
152
196
156c
156
100
185a
182a
156a
195b
158
157
154
155d
157a
191a
185c
192b
189
194
173
177
192
191
166
170a
185b
170
173a
165
176c
176d
184
176
164
172
171
155a
153
186
186
156b
195a
182
185
185
159d
TM038485

42. MGE model H/I

MGE 71, MGE 80, MGE 90
50/60 Hz

Antenna, external

Pos.	Description / Kit No	98271482
291	Antenna with cable gland	1

Bearing

Description	Type	kit No
Ball bearing	6204 + 6204	98330603
	6304 + 6204	98330604
	6305 + 6204	98330605
	6306 + 6204	98330606
Hybrid ball bearing	6204 + 6204	98330608
	6304 + 6204	98330609
	6305 + 6204	98330610
	6306 + 6204	98330611

Content

Pos.	Description	Quantity
153	Drive end	1
154	Non-drive end	1
156d	Gasket	1
156c	Seal ring for drive end and non-drive end	2
158	Corrugated spring washer	1
158a	O-ring	1

Blanking plug

Pos.	Description / Kit No	98334761
-	Blanking plug	4

Cable glands

Pos.	Description	Kit No
293	1 x D7-14 & 2 x D5	98337336
	1 x D7-14 & 4 x D5	98337337
	1 x D7-14 & 6 x D5	98337338
	10 x D7-14	98337339
	10 x D5 single entry	98337340
	10 x D5 double entry	98337341

Cable glands, adapter

Pos.	Description	Kit No
252a	1/2" & 3/4" NPT & Gland D7-14	98345796

Connector

Pos.	Description	Kit No
266	Connector set	98403113

Control box, complete

Note: all motorers are delivered without CIM modul.

Description			Kit No
Functional module	Control panel	Power board	
FM200	HMI100	PB111	98406660
		PB121	98406661
		PB311	98406664
		PB321	98406665
	HMI200	PB111	98406627
		PB121	98406628
		PB311	98406651
		PB321	98406652
FM300	HMI200	PB111	98406653
		PB113	98406655
		PB121	98406654
		PB123	98406657
		PB311	98406658
		PB321	98406659

Control box, lower part with power board

Description		Kit No
1 x 90-240 VAC / 30-300 VDC		
PB113	**(0.25 - 0.75 kW)**	**98330612**
PB123	**(1.1 - 1.5 kW)**	**98330613**
1 x 200-240 VAC		
PB111	**(0.25 - 0.75 kW)**	**98330614**
PB121	**(1.1 - 1.5 kW)**	**98330615**
PB112	**(0.25 - 0.75 kW IT)**	**98330616**
PB122	**(1.1 - 1.5 kW IT)**	**98330617**
3 x 380-500 VAC		
PB311	**(0.25 - 1.1 kW)**	**98330618**
PB321	**(1.5 - 2.2 kW)**	**98330619**
PB312	**(0.25 - 1.1 kW IT)**	**98330620**
PB322	(1.5 - 2.2 kW IT)	98330621

Content

Pos.	Description	Quantity
178	Screw	4
251	Power board	1
275a	Pin header	1
277	Isolation cover	1
277a	Screw	1

Control box, upper part

Description	Kit No
HMI 100 / 101 (Blind 1 ph)	*98334762*
HMI 100 / 101 (Blind 3 ph)	*98334763*
HMI 200 / 201 (Standard 1 ph)	*98334764*
HMI 200 / 201 (Standard 3ph)	*98334765*
HMI 250 / 251 (HomeBooster 1 ph)	*98334766*
HMI 250 / 251 (HomeBooster 3 ph)	*98334767*
HMI 300 / 301 (Graphical 1 ph)	*98334768*
HMI 300 / 301 (Graphical 3 ph)	*98334769*

Content

Pos.	Description	Quantity
251b	Control box	1
251d	Screw	4

Cover for CIM

Pos.	Description	Kit No
287	Cover	*98330622*

Fan

Pos.	RPM	kW	Diameter	Kit No
152 156	1500 - 2000	all	88 [1)]	*98290123*
	2900 - 4000	≤1.1	88 [1)]	*98290123*
		>1.1	108 [1)]	*98290124*
	4000 - 5900	all	88 [1)]	*98290123*

1) Some custom-made motors are fitted with an oversize fan.
The table is according the standard range.

Fan cover

Pos.	Description	Kit No
151, 152	Cover for fan, with screw	*98330566*

MGE model H/I

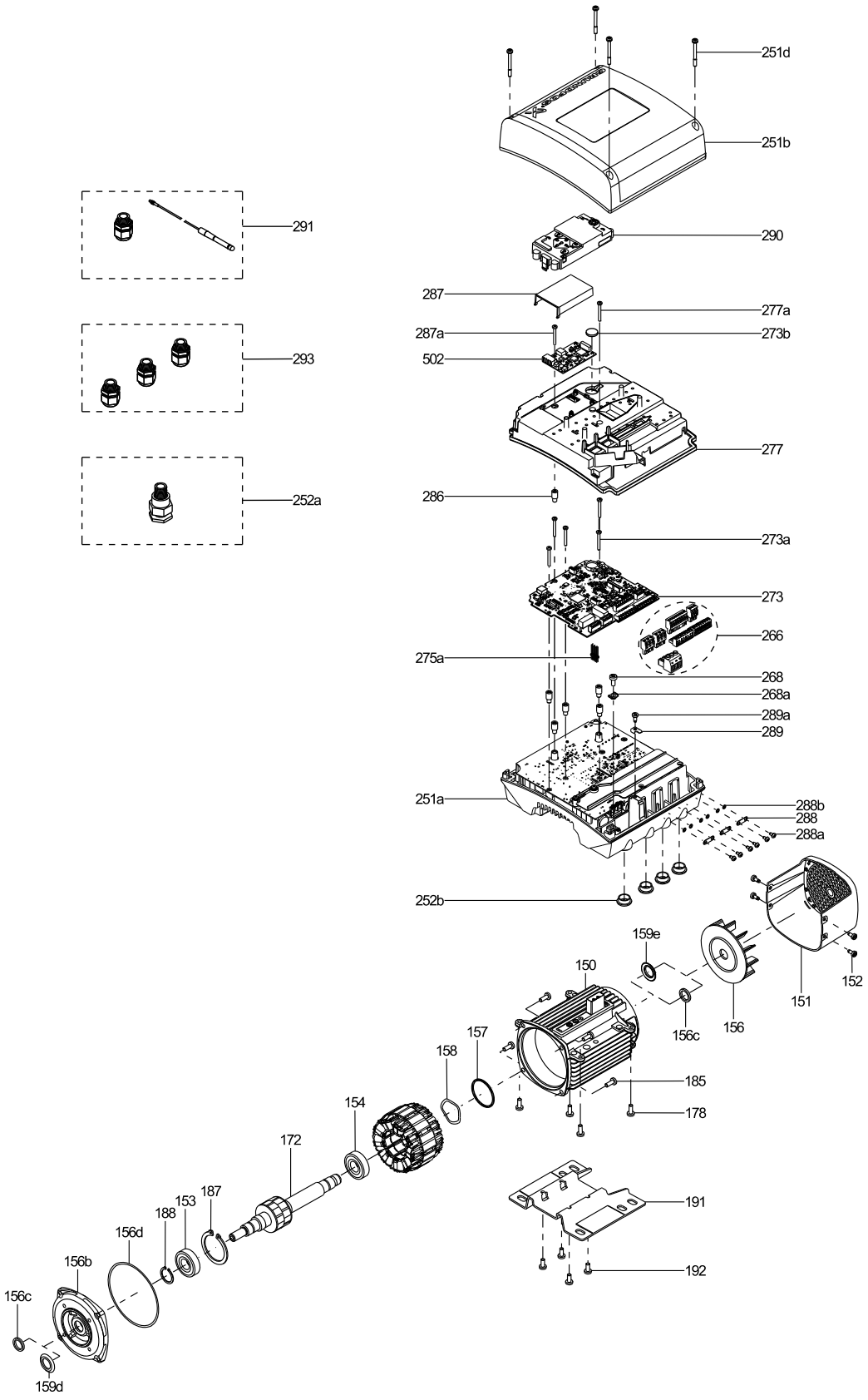

TM057026

Flange

Standard	Type	Description	Model	Kit No
IEC	B3	MGE71/80	End-shield	*98330550*
		MGE90	End-shield	*98330551*
	B5	MGE71	FF130	*98290129*
		MGE80	FF165	*98330547*
		MGE90	FF165	*98330548*
	B14 V18 B34	MGE71	FT85	*98290125*
		MGE80	FT100	*98290126*
		MGE80	FT100 / 6304 bearing	*98290127*
		MGE90	FT115	*98290128*
NEMA	56C	MLE71/80	-	*98330554*
		MLE90	-	*98330555*
	182TC	MLE90	-	*98330556*
CME	CMS1D	MGE71/80	Discharge S 1" Rp	*98330558*
	CMS1C	MGE71/80	Discharge S 1" NPT	*98330564*
	CMS1B	MGE71/80	Small	*98330559*
	CMS2A	MGE90	Small	*98330561*
	CML1A	MGE71/80	Large	*98330562*
	CML2A	MGE90	Large	*98330563*

Content

Pos.	Description	Quantity
156b	Flange	1
156d	Gasket	1
185	Screw	4
188	Locking ring (only on NEMA & IEC MGE90)	1

Functional module

Description	Kit No
FM100 (Basic)	*98334775*
FM200 (Standard)	*98334776*
FM300 (Advanced)	*98334777*

Content

Pos.	Description	Quantity
273	Functional module	1
273a	Screw	5
275a	Pin header	1
286	Spacer	1

Foot plate

Pos.	Colour	Size	Kit No
191, 192	Black	71	*98330597*
		80	*98330598*
		71, 80, 90 NEMA 56C	*98330600*
		90	*98330599*

Foot plate, CM(E) pump

Pos.	Colour	Size		Kit No
191, 192	Black	SmCM	≤1.1 kW	*98330601*
		SmCM	> 1.1 kW	*98330599*
		LaCM	≤1.1 kW	*98330602*
		LaCM	> 1.1 kW	*98374278*
	Grey	SmCM	≤1.1 kW	*98430950*
		SmCM	> 1.1 kW	*98430951*
		LaCM	≤1.1 kW	*98430954*
		LaCM	> 1.1 kW	*98430955*

Isolation cover for power board

Description	Kit No
1 Single-phase	*98330624*
3 Three-phase	*98330625*

Content

Pos.	Description	Quantity
277	Isolation cover	1
277a	Screw	1

HMI - control panel

Pos.	Description		Kit No
290	HMI 300	(Graphical with radio)	*98334770*
	HMI 301	(Graphical without radio)	*98365944*
	HMI 100	(Blind with radio)	*98334772*
	HMI 200	(Standard with radio)	
	HMI 250	(Homebooster with radio)	
	HMI 101	(Blind without radio)	*98365945*
	HMI 201	(Standard without radio)	
	HMI 251	(Homebooster without radio)	

Screws including wire clamps and PE washer

Pos.	Description / Kit No	*98330627*
268	Wire clamp	1
268a	Screw	1
288	Wire clamp	3
288a	Screw	6
288b	Washer	6
289	Base for earth screw	1
289a	Screw	1

Seal (gamma ring)

Pos.	Description	Kit No
159d 159e	MGE71/80, MLE71/80	*98334779*
	MGE90	*98334780*
	MLE90	*98334781*

MGE model H/I

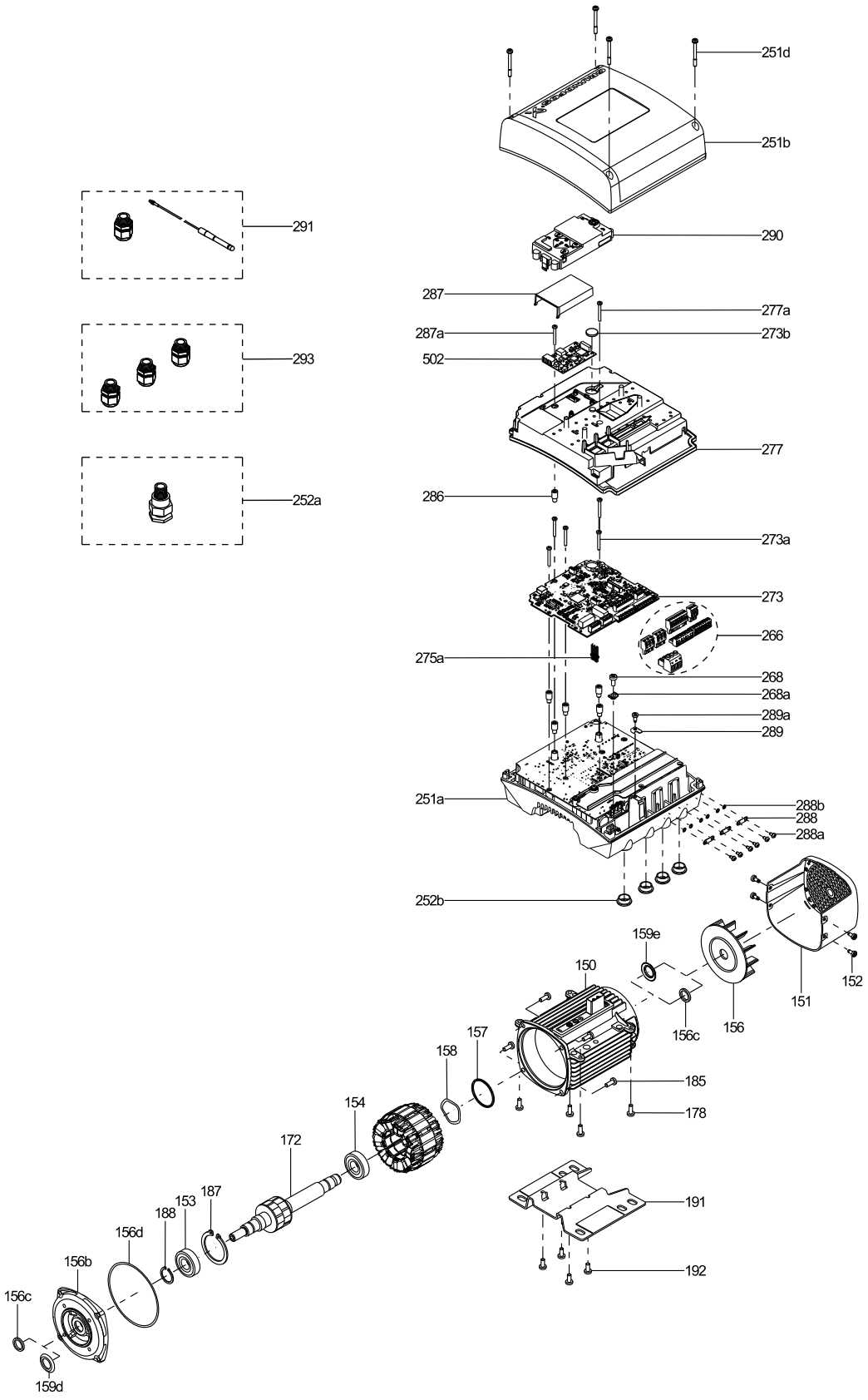
251d
251b
291
290
287
277a
287a
273b
502
293
277
252a
286
273a
273
266
275a
268
268a
289a
289
251a
288b
288
288a
252b
159e
150
152
151
156c
156
157
158
185
178
154
172
191
187
153
188
156d
156b
192
156c
159d
TM057026

Replacement motor (without control box, frequency converter and foot)

IEC, 1-phase 230 V, frame size 71

Power [kW]	Mounting designation	Max. speed	Shaft	Length of stator	Class	Kit No
0.37	B3	-4	Keyway	A	IP55	98293691
					IP66	98293913
				B	IP66	98444540
			Smooth	A	IP55	98293689
					IP66	98293911
				B	IP66	98444538
	B5	-4	Keyway	A	IP55	98293711
					IP66	98293933
				B	IP66	98444546
			Smooth	A	IP55	98293710
					IP66	98293932
				B	IP66	98444545
	B14	-4	Keyway	A	IP55	98293690
					IP66	98293912
				B	IP66	98444539
			Smooth	A	IP55	98293688
					IP66	98293910
				B	IP66	98444537
0.55	B3	-2	Keyway	A	IP55	98293687
					IP66	98293909
			Smooth	A	IP55	98293685
					IP66	98293907
		-1	Keyway	A	IP55	98293695
					IP66	98293917
			Smooth	A	IP55	98293693
					IP66	98293915
	B5	-2	Keyway	A	IP55	98293709
					IP66	98293931
			Smooth	A	IP55	98293708
					IP66	98293930
		-1	Keyway	A	IP55	98293713
					IP66	98293935
			Smooth	A	IP55	98293712
					IP66	98293934
	B14	-2	Keyway	A	IP55	98293686
					IP66	98293908
			Smooth	A	IP55	98293684
					IP66	98293906
		-1	Keyway	A	IP55	98293694
					IP66	98293916
			Smooth	A	IP55	98293692
					IP66	98293914

IEC, 1-phase 230 V, frame size 80

Power [kW]	Mounting designation	Max. speed	Shaft	Length of stator	Class	Kit No
0.55	B3	-4	Keyway	B	IP55	98293757
					IP66	98293979
			Smooth	B	IP55	98293755
					IP66	98293977
	B5	-4	keyway	B	IP55	98293792
					IP66	98294014
			Smooth	B	IP55	98293791
					IP66	98294013
	B14	-4	Keyway	B	IP55	98293756
					IP66	98293978
			Smooth	B	IP55	98293754
					IP66	98293976
0.75	B3	-4	Keyway	C	IP55	98293761
					IP66	98293983
			Smooth	C	IP55	98293759
					IP66	98293981
		-2	Keyway	A	IP55	98293747
					IP66	98293969
			Smooth	A	IP55	98293745
					IP66	98293967
	B5	-4	Keyway	C	IP55	98293794
					IP66	98294016
			Smooth	C	IP55	98293793
					IP66	98294015
		-2	Keyway	A	IP55	98293786
					IP66	98294008
			Smooth	A	IP55	98293785
					IP66	98294007
	B14	-4	Keyway	C	IP55	98293760
					IP66	98293982
			Smooth	C	IP55	98293758
					IP66	98293980
		-2	Keyway	A	IP55	98293746
					IP66	98293968
			Smooth	A	IP55	98293744
					IP66	98293966
				A	IP55	98293720 [1)]
					IP66	98293942 [1)]

Power [kW]	Mounting designation	Max. speed	Shaft	Length of stator	Class	Kit No
1.1	B3	-2	Keyway	B	IP55	*98293752*
					IP66	*98293974*
			Smooth	B	IP55	*98293750*
					IP66	*98293972*
		-1	Keyway	A	IP55	*98293733*
					IP66	*98293955*
			Smooth	A	IP55	*98293725*
					IP66	*98293947*
	B5	-2	Keyway	B	IP55	*98293790*
					IP66	*98294012*
			Smooth	B	IP55	*98293789*
					IP66	*98294011*
		-1	Keyway	A	IP55	*98293788*
					IP66	*98294010*
			Smooth	A	IP55	*98293787*
					IP66	*98294009*
	B14	-2	Keyway	B	IP55	*98293751*
					IP66	*98293973*
			Smooth	B	IP55	*98293749*
					IP66	*98293971*
					IP55	*98293753* [1]
					IP66	*98293975* [1]
		-1	Keyway	A	IP55	*98360068*
					IP66	*98360070*
			Smooth	A	IP55	*98360067*
					IP66	*98360069*
					IP55	*98293748* [1]
					IP66	*98293970* [1]

1) With oversize bearing

IEC, 1-phase 230 V, frame size 90

Power [kW]	Mounting designation	Max. speed	Shaft	Length of stator	Class	Kit No
1.5	B3	-2	Keyway	C	IP55	*98293846*
					IP66	*98294068*
			Smooth	C	IP55	*98293843*
					IP66	*98294065*
		-1	Keyway	B	IP55	*98293840*
					IP66	*98294062*
			Smooth	B	IP55	*98293837*
					IP66	*98294059*
	B5	-2	Keyway	C	IP55	*98293845*
					IP66	*98294067*
			Smooth	C	IP55	*98293842*
					IP66	*98294064*
		-1	Keyway	B	IP55	*98293839*
					IP66	*98294061*
			Smooth	B	IP55	*98293836*
					IP66	*98294058*
	B14	-2	Keyway	C	IP55	*98293844*
					IP66	*98294066*
			Smooth	C	IP55	*98293841*
					IP66	*98294063*
		-1	Keyway	B	IP55	*98293838*
					IP66	*98294060*
			Smooth	B	IP55	*98293835*
					IP66	*98294057*

IEC, 3-phase 430 V, frame size 71

Power [kW]	Mounting designation	Max. speed	Shaft	Length of stator	Class	Kit No
0.37	B3	-4	Keyway	A	IP55	98293703
					IP66	98293925
				B	IP66	98444544
			Smooth	A	IP55	98293701
					IP66	98293923
				B	IP66	98444542
	B5		Keyway	A	IP55	98293717
					IP66	98293939
				B	IP66	98444548
			Smooth	A	IP55	98293716
					IP66	98293938
				B	IP66	98444547
	B14		Keyway	A	IP55	98293702
					IP66	98293924
				B	IP66	98444543
			Smooth	A	IP55	98293700
					IP66	98293922
				B	IP66	98444541
0.55	B3	-2	Keyway	A	IP55	98293699
					IP66	98293921
			Smooth	A	IP55	98293697
					IP66	98293919
		-1	Keyway	A	IP55	98293707
					IP66	98293929
			Smooth	A	IP55	98293705
					IP66	98293927
	B5	-2	Keyway	A	IP55	98293715
					IP66	98293937
			Smooth	A	IP55	98293714
					IP66	98293936
		-1	Keyway	A	IP55	98293719
					IP66	98293941
			Smooth	A	IP55	98293718
					IP66	98293940
	B14	-2	Keyway	A	IP55	98293698
					IP66	98293920
			Smooth	A	IP55	98293696
					IP66	98293918
		-1	Keyway	A	IP55	98293706
					IP66	98293928
			Smooth	A	IP55	98293704
					IP66	98293926

IEC, 3-phase 430 V, frame size 80

Power [kW]	Mounting designation	Max. speed	Shaft	Length of stator	Class	Kit No
0.55	B3	-4	Keyway	B	IP55	98293780
					IP66	98294002
			Smooth	B	IP55	98293778
					IP66	98294000
	B5	-4	keyway	B	IP55	98293802
					IP66	98294024
			Smooth	B	IP55	98293801
					IP66	98294023
	B14	-4	Keyway	B	IP55	98293779
					IP66	98294001
			Smooth	B	IP55	98293777
					IP66	98293999
0.75	B3	-4	Keyway	C	IP55	98293784
					IP66	98294006
			Smooth	C	IP55	98293782
					IP66	98294004
		-2	Keyway	A	IP55	98293765
					IP66	98293987
			Smooth	A	IP55	98293763
					IP66	98293985
	B5	-4	Keyway	C	IP55	98293804
					IP66	98294026
			Smooth	C	IP55	98293803
					IP66	98294025
		-2	Keyway	A	IP55	98293796
					IP66	98294018
			Smooth	A	IP55	98293795
					IP66	98294017
	B14	-4	Keyway	C	IP55	98293783
					IP66	98294005
			Smooth	C	IP55	98293781
					IP66	98294003
		-2	Keyway	A	IP55	98293764
					IP66	98293986
			Smooth	A	IP55	98293762
					IP66	98293984
					IP55	98293766 [1)]
					IP66	98293988 [1)]

Power [kW]	Mounting designation	Max. speed	Shaft	Length of stator	Class	Kit No
1.1	B3	-2	Keyway	B	IP55	98293775
					IP66	98293997
			Smooth	B	IP55	98293773
					IP66	98293995
		-1	Keyway	A	IP55	98293770
					IP66	98293992
			Smooth	A	IP55	98293768
					IP66	98293990
	B5	-2	keyway	B	IP55	98293800
					IP66	98294022
			Smooth	B	IP55	98293799
					IP66	98294021
		-1	Smooth	A	IP55	98293797
					IP66	98294019
			Keyway	A	IP55	98293798
					IP66	98294020
	B14	-2	Keyway	B	IP55	98293774
					IP66	98293996
			Smooth	B	IP55	98293772
					IP66	98293994
					IP55	98293776 [1]
					IP66	98293998 [1]
		-1	Keyway	A	IP55	98293769
					IP66	98293991
			Smooth	A	IP55	98293767
					IP66	98293989
					IP55	98293771 [1]
					IP66	98293993 [1]

1) With oversize bearing

IEC, 1-phase 430 V, frame size 90

Power [kW]	Mounting designation	Max. speed	Shaft	Length of stator	Class	Kit No
1.1	B3	-4	Keyway	D	IP55	98293876
					IP66	98294098
			Smooth	D	IP55	98293873
					IP66	98294095
	B5		Keyway	D	IP55	98293875
					IP66	98294097
			Smooth	D	IP55	98293872
					IP66	98294094
	B14		Keyway	D	IP55	98293874
					IP66	98294096
			Smooth	D	IP55	98293871
					IP66	98294093

Power [kW]	Mounting designation	Max. speed	Shaft	Length of stator	Class	Kit No
1.5	B3	-2	Keyway	C	IP55	98293858
					IP66	98294080
			Smooth	C	IP55	98293855
					IP66	98294077
		-1	Keyway	B	IP55	98293852
					IP66	98294074
			Smooth	B	IP55	98293849
					IP66	98294071
	B5	-2	Keyway	C	IP55	98293857
					IP66	98294079
			Smooth	C	IP55	98293854
					IP66	98294076
		-1	Keyway	B	IP55	98293851
					IP66	98294073
			Smooth	B	IP55	98293848
					IP66	98294070
	B14	-2	Keyway	C	IP55	98293856
					IP66	98294078
			Smooth	C	IP55	98293853
					IP66	98294075
		-1	Keyway	B	IP55	98293850
					IP66	98294072
			Smooth	B	IP55	98293847
					IP66	98294069
2.2	B3	-2	Keyway	D	IP55	98293870
					IP66	98294092
			Smooth	D	IP55	98293867
					IP66	98294089
		-1	Keyway	C	IP55	98293864
					IP66	98294086
			Smooth	C	IP55	98293861
					IP66	98294083
	B5	-2	Keyway	D	IP55	98293869
					IP66	98294091
			Smooth	D	IP55	98293866
					IP66	98294088
		-1	Keyway	C	IP55	98293863
					IP66	98294085
			Smooth	C	IP55	98293860
					IP66	98294082
	B14	-2	Keyway	D	IP55	98293868
					IP66	98294090
			Smooth	D	IP55	98293865
					IP66	98294087
		-1	Keyway	C	IP55	98293862
					IP66	98294084
			Smooth	C	IP55	98293859
					IP66	98294081

NEMA, 1-phase 240 V, frame size 71

Mounting designation	Power [hp]	Max. speed	Shaft	Length of stator	Class	Kit No
56 C	0.5	-4	Keyway	A	IP55	*98293724*
					IP66	*98293946*
			Smooth	A	IP55	*98293723*
					IP66	*98293945*

NEMA, 1-phase 240 V, frame size 80

Mounting designation	Power [hp]	Max. speed	Shaft	Length of stator	Class	Kit No
56 C	1	-4	Keyway	C	IP55	*98293811*
					IP66	*98294033*
			Smooth	C	IP55	*98293810*
					IP66	*98294032*
		-2	Keyway	A	IP55	*98293721*
					IP66	*98293943*
			Smooth	A	IP55	*98293722*
					IP66	*98293944*
	0.75	-4	Keyway	B	IP55	*98293809*
					IP66	*98294031*
			Smooth	B	IP55	*98293808*
					IP66	*98294030*
		-2	Keyway	B	IP55	*98293806*
					IP66	*98294028*
			Smooth	B	IP55	*98293807*
					IP66	*98294029*
	1.5	-1	Keyway	A	IP55	*98293726*
					IP66	*98293948*
			Smooth	A	IP55	*98293727*
					IP66	*98293949*
	2	-2	Keyway	C	IP55	*98293881*
					IP66	*98294102*
			Smooth	C	IP55	*98293880*
					IP66	*98294101*
		-1	Keyway	B	IP55	*98293879*
					IP66	*98294100*
			Smooth	B	IP55	*98293878*
					IP66	*98294099*

NEMA, 3-phase 460V, frame size 71

Mounting designation	Power [hp]	Max. speed	Shaft	Length of stator	Class	Kit No
56 C	0.5	-4	Keyway	A	IP55	*98293732*
					IP66	*98293954*
			Smooth	A	IP55	*98293731*
					IP66	*98293953*
	0.75		Keyway	B	IP55	*98293816*
					IP66	*98294038*
			Smooth	B	IP55	*98293815*
					IP66	*98294037*
	1	-4	Keyway	C	IP55	*98293818*
					IP66	*98294040*
			Smooth	C	IP55	*98293817*
					IP66	*98294039*
		-2	Keyway	A	IP55	*98293729*
					IP66	*98293951*
			Smooth	A	IP55	*98293730*
					IP66	*98293952*
	1.5	-4	Keyway	D	IP55	*98293891*
					IP66	*98294112*
			Smooth	D	IP55	*98293890*
					IP66	*98294111*
		-2	Keyway	B	IP55	*98293813*
					IP66	*98294035*
			Smooth	B	IP55	*98293814*
					IP66	*98294036*
		-1	Keyway	A	IP55	*98293734*
					IP66	*98293956*
			Smooth	A	IP55	*98293735*
					IP66	*98293957*
	2	-2	Keyway	C	IP55	*98293885*
					IP66	*98294106*
			Smooth	C	IP55	*98293884*
					IP66	*98294105*
		-1	Keyway	B	IP55	*98293883*
					IP66	*98294104*
			Smooth	B	IP55	*98293882*
					IP66	*98294103*
	3	-2	Keyway	D	IP55	*98293889*
					IP66	*98294110*
			Smooth	D	IP55	*98293888*
					IP66	*98294109*
		-1	Keyway	C	IP55	*98293887*
					IP66	*98294108*
			Smooth		IP55	*98293886*
					IP66	*98294107*
182 TC	1.5	-4	Keyway	D	IP55	*98293895*
					IP66	*98294117*
			Smooth	D	IP55	*98293894*
					IP66	*98294115*
	3	-2	Keyway	D	IP55	*98293893*
					IP66	*98294114*
			Smooth	D	IP55	*98293892*
					IP66	*98294113*

43. MGE model J

MGE 100, MGE 112, MGE 132, MGE 160

50/60 Hz

Bearing

Description	Type	Kit No
Ball bearing	6204 + 6204	*98330603*
	6304 + 6204	*98330604*
	6305 + 6204	*98330605*
	6306 + 6204	*98330606*
	6305 + 6205	*98881507*
	6306 + 6205	*98881508*
	6306 + 6206	*98881509*
	6308 + 6206	*98881510*
	6308 + 6306	*99124389*
	6308 + 6206	*98881521*
	6309 + 6306	*98881522*
	6207 + 6205	*98881523*
	7306 + 6206	*98881524*
	7308 + 6206	*98881525*
	6308 + 6306	*99099338*
	7309 + 6306	*98881526*
	6306 + 7306	*98881527*
	6308 + 7306	*98881528*
	6309 + 7306	*98881529*
	6309 + 6306	*99177551*
Hybrid ball bearing	6305 + 6205	*98881530*
	6306 + 6205	*98881531*
	6306 + 6206	*98881532*
	6308 + 6206	*98881533*
	6308 + 6206	*98881534*
	6308 + 6306	*99124391*
	7306 + 6206	*98881537*
	7308 + 6206	*98881538*
	6306 + 7306	*98881540*
	6308 + 7306	*98881541*
	6309 + 7306	*98881542*
	7309 + 6306	*99123455*

Content

Pos.	Description	Quantity
153	Drive end	1
154	Non-drive end	1
156c/ 156d	Seal ring for drive end and non-drive end	2
158	Waved washer	1
157	O-ring	1
187/188	Retaining ring	1

Blanking plug

Pos.	Description / Kit No (small/large)	***99052475/ 99052476***
252b	Blanking plug	4 (5)

Cable glands

Description	Kit No
1 x D9-18 & 2 x D5	*98736096*
1 x D14-D25 & 2 x D5	*98736115*
1 x D9-18 & 4 x D5	*98736131*
1 x D14-D25 & 4 x D5	*98736132*
1 x D9-18 & 6 x D5	*98736138*
1 x D14-25 & 6 x D5	*98736140*
10 x D9-18	*98736142*
10 x D14-25	*98736145*

Control box, complete

Note: all control boxes are delivered without CIM module.

Description				Kit No
Functional module	Control panel	Power board	Model	
FM300	HMI100	PB321	CAAH	*99132410*
		PB321	CAAH NPT	*99132412*
		PB331	CAAK NPT	*99130816*
		PB331	CAAK	*99097057*
		PB341	CAAL	*99097099*
		PB341	CAAL NPT	*99130817*
	HMI200	PB321	CBAH	*99132383*
		PB321	CBAH NPT	*99132387*
		PB331	CBAK	*98878612*
		PB331	CBAK NPT	*99130329*
		PB341	CBAL	*98878613*
		PB341	CBAL NPT	*99130332*
	HMI201	PB331	CFAK	*99097141*
		PB341	CFAL	*99097199*
	HMI300	PB321	CDAH	*99132424*
		PB321	CDAH NPT	*99132425*
		PB331	CDAK	*98878619*
		PB331	CDAK NPT	*99130454*
		PB341	CDAL NPT	*99130457*
		PB341	CDAL	*98878620*

Control box, lower part with power board

Description	Power board	kW	Kit No
3 x 200-240 VAC			
	PB371	Max. 1.1 - 1.5 kW	99126393
	PB351	Max. 4.0 kW (small NPT)	*99126310*
	PB361	Max. 5.5 kW (large NPT)	*99126356*
3 x 380-500 VAC			
	PB321	Max 2.2 kW	*99094250*
	PB321	Max 2.2 kW (NPT)	*99126381*
	PB331	Max. 5.5 kW	*98859571*
		Max. 5.5 kW (NPT)	*99125882*
	PB341	Max. 11 kW	*98859573*
		Max. 11 kW (NPT)	*99126307*

Content

Pos.	Description	Quantity
178	Screw	4
251a	Control box lower part cpl.	1
275a	Pin header	1
277	Isolation cover	1
277a	Screw	1
277b	Spring relief	

Control box, upper part

Description	Kit No
Blind, small	*98869864*
Blind, large	*98869868*
Standard, small	*98869865*
Standard, large	*98869869*
Graphical, small	*98869867*
Graphical, large	*98869871*

Content

Pos.	Description	Quantity
251b	Control box	1
251d	Screw	4

MGE model J

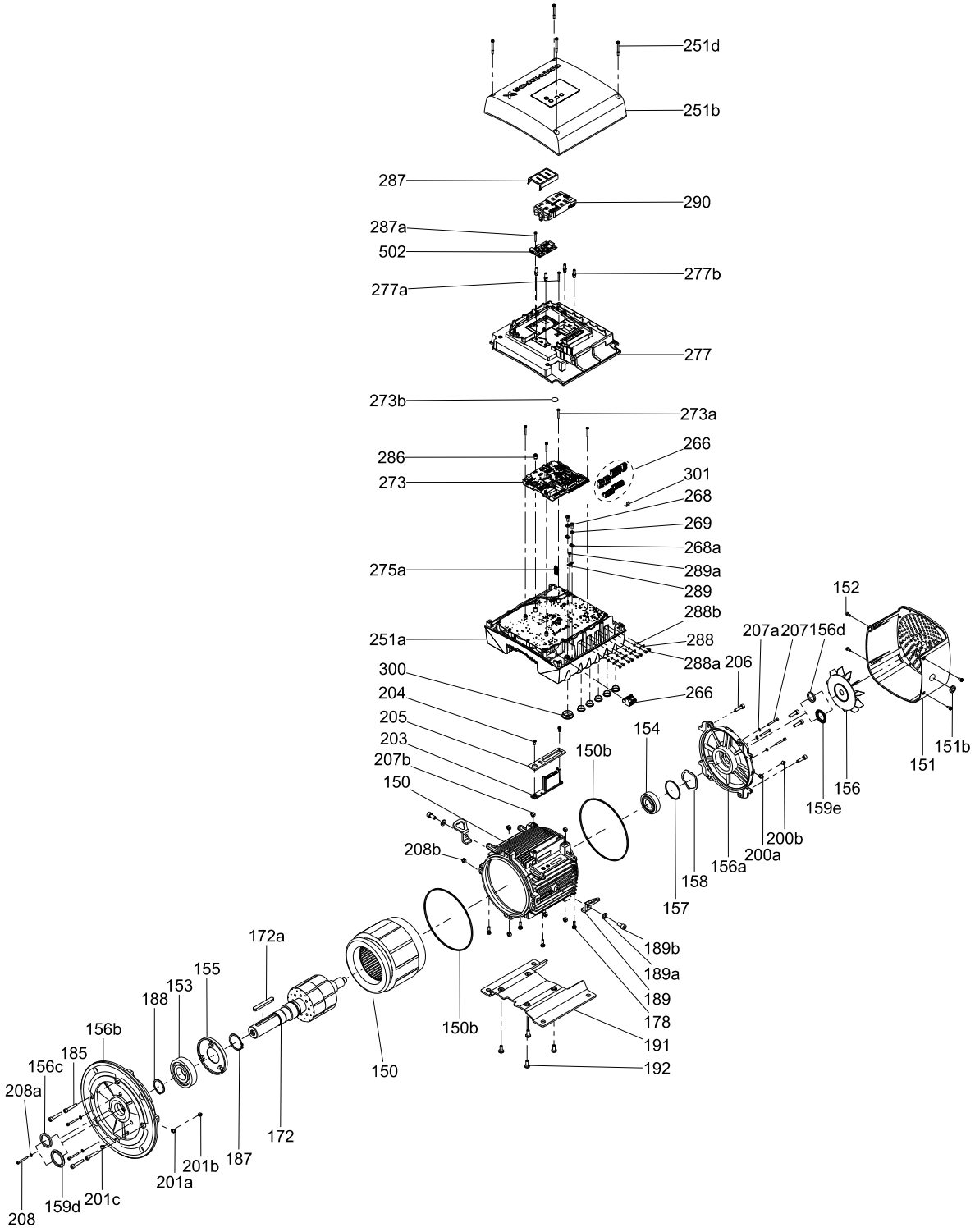

TM066857

Control panel

Pos.	Description	Kit No
290	Graphical with radio	*98939971*
	Graphical without radio	*98939972*
	Standard with radio	*98939973*
	Standard without radio	*98939974*
	Basic with radio	*98939975*
	Basic without radio	*98939976*

Cover for CIM

Pos.	Description	Kit No
287	Cover	*98330622*

End shield

Pos.	Description	Kit No
156a/ 156b	End shield, non-drive end, D52/D161x25 6205	*98869882*
	End shield, non-drive end, D62/D161x26 6206	*98869883*
	End shield, D72/161x29.2 SF	*98869884*
	End shield, MGE132	*98869885*
	End shield, D72/223x32 SF	*98869993*
	End shield, non-drive end, D52/D161x25, IP66 6205	*98961595*
	End shield, non-drive end, D62/D161x26 IP66 6206	*98961596*
	End shield, MGE132, IP66	*99028040*
	End shield, D72/223x34.5, IP66	*98869886*

Fan

Pos.	RPM	kW	Diameter	Kit No
156	4000-5900	3.0-5.5	108 (seal ring D30) [1)]	*98869874*
			108 (seal ring D35) [1)]	*98869875*
	2900-4000	3.0-5.5	128 (seal ring D30) [1)]	*98869876*
			128 (seal ring D35) [1)]	*98869877*
	1450-2000 2900-4000	2.2-4.0 5.5-7.5	158 (seal ring D30) [1)]	*98869878*
			158 (seal ring D35) [1)]	*98869879*
	1450-2000	5.5-7.5	198 (seal ring D30) [1)]	*98869880*
			198 (seal ring D35) [1)]	*98869881*

1) Some custom-made motors are fitted with an oversize fan.
The table is according the standard range.

Fan cover

Pos.	Description	Kit No
151	Cover for fan, 193.9x191.3x112.7	*98861958*
	Cover for fan, 261.8x254.9x145	*98869872*
	Cover for fan, 261.8x254.9x145 regrease	*98869873*

MGE model J

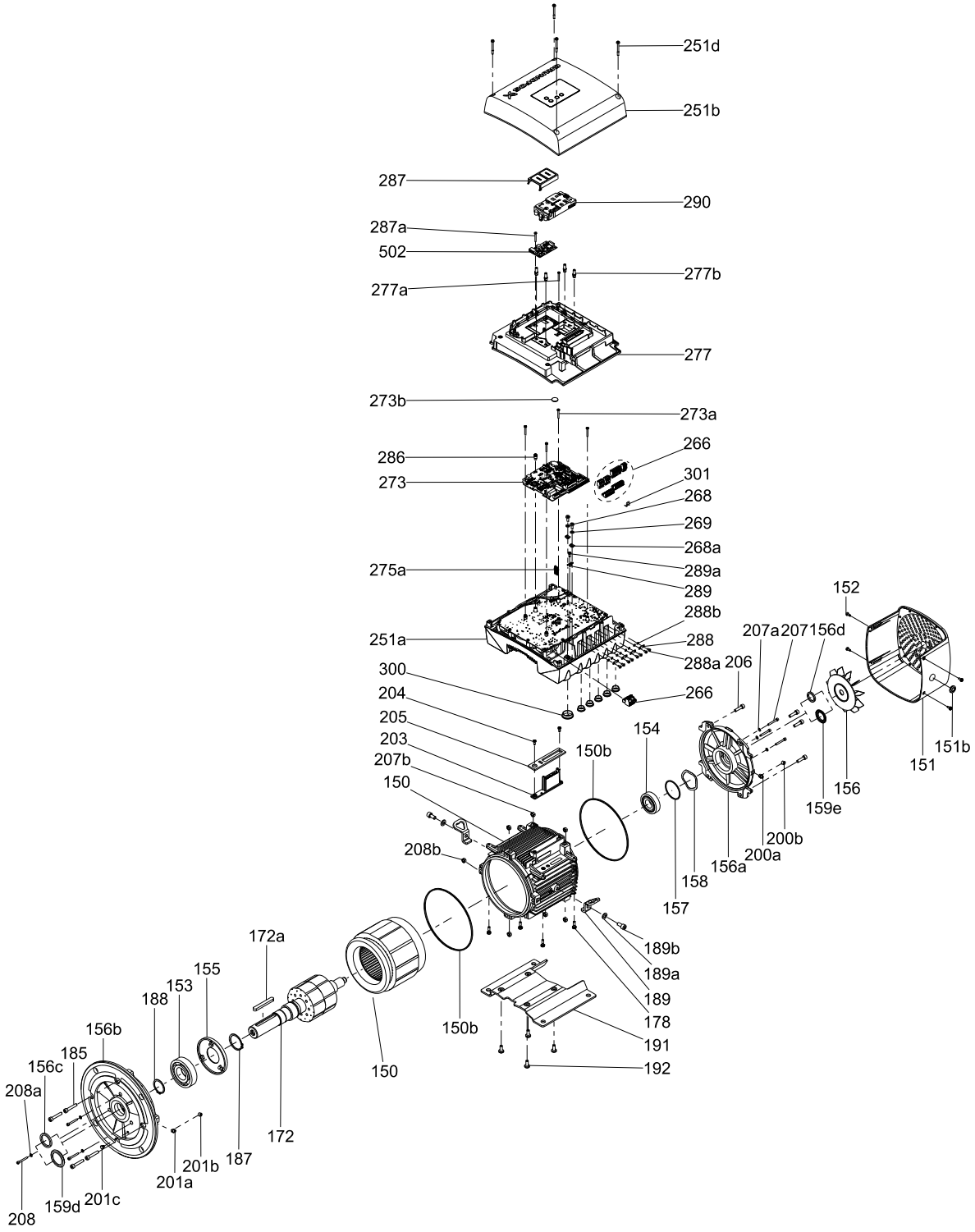

TM066857

Flange

Standard	Type	Description	Model	Kit No
IEC	B3	MGE100	D161	*98869894*
		MGE100	Drive-end, D161 M5	*98869894*
		MGE112	Drive-end, D161 M6	*98966320*
		MGE132	Drive-end, D214	*98869908*
		MGE132	Drive-end, D161	*98869895*
		MGE160	Drive-end, re-grease D214	*98869909*
	B5	MGE100	FF215 D161 M5	*98869891*
		MGE112	FF215 D161 M6	*98966316*
		MGE132	FF265 SF	*98869911*
		MGE132	FF265 D161	*98869892*
		MGE132	FF265 SF D161	*98869897*
		MGE132	FF265 D214	*98869905*
		MGE160	FF300 regrease SF D214	*98869912*
		MGE160	FF300 regrease D214	*98869906*
	B14	MGE90	FT115	*98869887*
		MGE100/112/ 132	FT130 D214	*98869910*
		MGE100	FT130 D161 M5	*98869888*
		MGE112	FT130 SF D161 M6	*98869896*
		MGE112	FT130 D161 M6	*98966301*
		MGE132	FT130 SF D214	*99027696*
		MGE132	FT165, D161	*98869889*
		MGE132	FT165 D214	*98869903*
NEMA	56C/ 143-5JM/ 182-4JM	MLE90/ 114.3	D161	*98966322*
	182/4TC	MLE100	D161 M5	*98869898*
		114.3 (shaft height)	D161 M6	*98966321*
	213/215TC	MLE100	D214	*98869913*
		MLE132	D161	*98869899*
	254/256TC	133.5; 158.75 (shaft height)	D214 (regrease)	*98869914*
CM		MGE100/112	MG100S	*98869900*
			MG100L	*98869901*
		MGE112	D156.7 D166	*99027599*
		MGE132	D156.7 D214 (large)	*98869915*

Content

Pos.	Description	Quantity
156b	Flange	1
156c	Seal ring	1
201c	Drain plug	3

Functional module

Description	Kit No
Basic	*98334775*
Standard	*98334776*
Advanced	*98334777*

Content

Pos.	Description	Quantity
273	Functional module	1
273a	Screw	5
275a	Pin header	1
286	Spacer	1

Foot

Pos.	Size	Description	Type	Kit No
191	100L	Small	IEC	*98962865*
	112M	Small		*98962866*
	132S	Small		*98962888*
		Large		*98962890*
	160M	Large		*98962891*
	132S/M	Large		*98962892*
	182/184T	Small	CED, NEMA	*98962894*
	213/215T	Small	NEMA	*98962896*
		Large		*98962897*
	254/256T	Large		*98962898*
	100L	Small	CM	*98962899*
	112M	Small		*98962901*
	132S	Large		*98962904*

Isolation cover for power board

Description	Kit No
Isolation cover, small	*98859508*
Isolation cover, large	*98859523*

Content

Pos.	Description	Quantity
277	Isolation cover	1
277a	Screw	1
277b	Spring relief	

Screws including wire clamps and PE washer

Pos.	Description / Kit No (small/large)	99028712/ 99028725
268	**Screw**	**1 (2)**
268a	**Base for earth screw**	**1 (2)**
288	**Wire clamp**	**4**
288a	**Screw**	**8**
288b	**Washer**	**8**
289	**Wire clamp**	**1**
289a	Screw	1

Stay bolts

Pos.	Description	Kit No
181	M5	*98881544*
	M6	*98881543*

Gamma ring (IP66)

Pos.	Description	Kit No
159d/ 159e	RB30/RB25	*98966323*
	RB30/RB30	*98966326*
	RB40/RB30	*98966327*
	RB45/RB30	*98966328*
	RB35/RB25	*99010180*
	RB25/RB25	*99123492*

Terminal plug

Pos.	Description	Kit No
203	Small	*99028676*
	Small, LV	*99042614*
	Large	*99028677*
	Large, LV	*99042615*

MGE model J

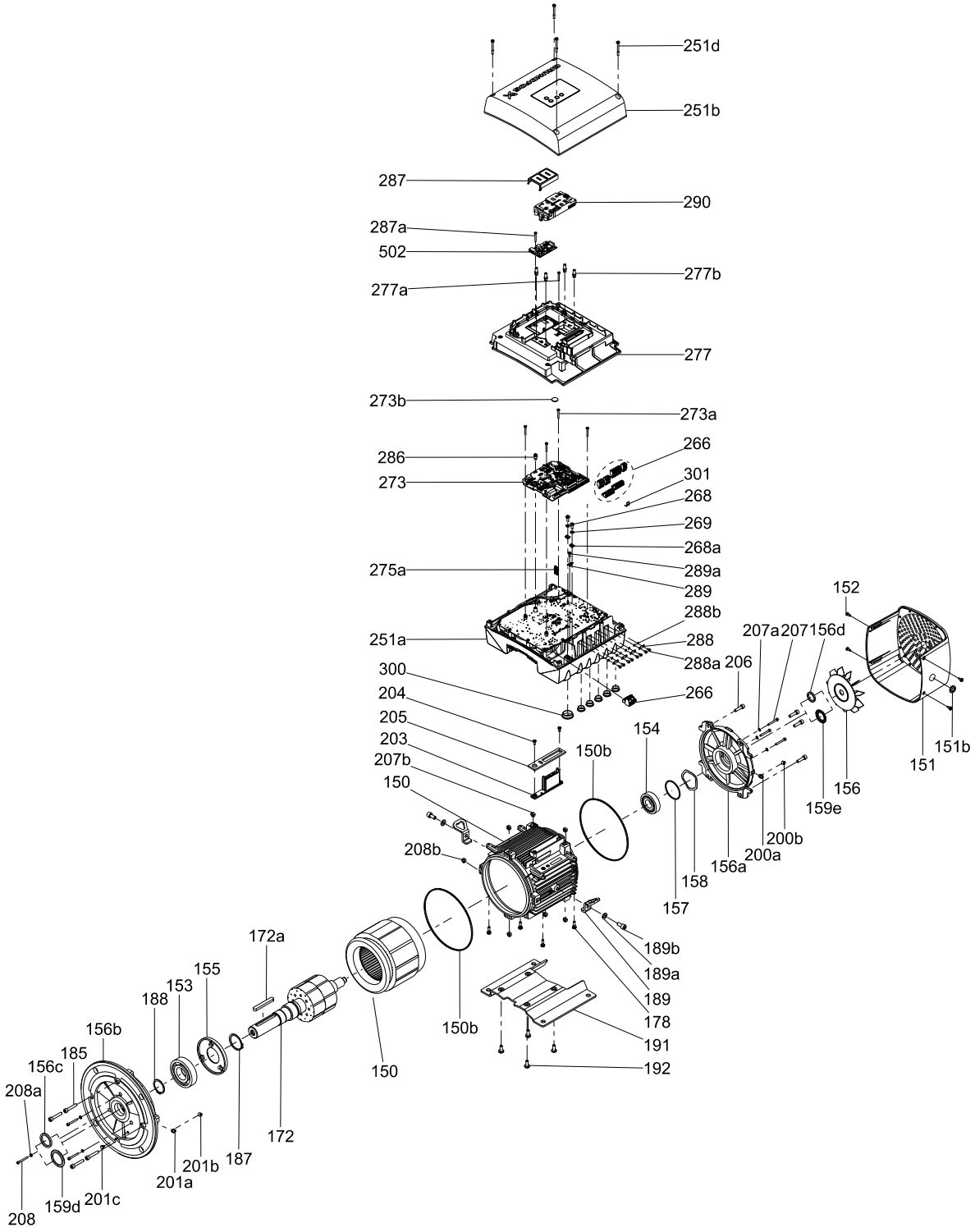

TM066857

Replacement motors (without control box)

IEC, 3-phase 430 V, frame size 100

Power [kW]	Mounting designation	Max. speed	Shaft	Class	Kit No
2.2	B3	2000	Keyway	IP55	*99010726*
	B5	2000	Keyway	IP55	*99010727*
	B14	2000	Keyway	IP55	*99010725*
			Smooth		*99010724*
	B35	2000	Keyway	IP55	*99045039*
3.0	B3	2000	Keyway	IP55	*99010730*
		4000			*99010737*
		5900			*99010743*
	B5	2000	Keyway	IP55	*99010731*
		4000			*99010736*
		5900			*99010742*
	B14	2000	Keyway	IP55	*99010729*
			Smooth		*99010728*
		4000	Keyway		*99010739*
			Smooth		*99010734*
					99010735
		5900	Keyway		*99010744*
			Smooth		*99010745*
	B34	4000	Keyway	IP55	*99010740*
			Smooth		*99010741*
		5900	Keyway		*99063215*
	B35	2000	Keyway	IP55	*99045055*
		4000			*99010738*
		5900			*99045070*

IEC, 3-phase 430 V, frame size 112

Power [kW]	Mounting designation	Max. speed	Shaft	Class	Kit No
4.0	B3	2000	Keyway	IP55	*99010749*
		4000			*99010755*
		5900			*99010764*
	B5	2000	Keyway	IP55	*99010748*
		4000			*99010759*
			Smooth		*99010760*
		5900	Keyway		*99010763*
	B14	2000	Keyway	IP55	*99010747*
			Smooth		*99010746*
		4000	Keyway		*99010753*
			Smooth		*99010751*
					99010752
					99010750
		5900	Keyway		*99010765*
			Smooth		*99010766*
					99010767
	B34	4000	Keyway	IP55	*99010756*
			Smooth		*99010757*
	B35	2000	Keyway	IP55	*99045060*
		4000			*99010758*
		5900			*99045084*
5.5	B5	4000	Keyway	IP55	*99264042*

IEC, 3-phase 430 V, frame size 132

Power [kW]	Mounting designation	Max. speed	Shaft	Class	Kit No
5.5	B3	2000	Keyway	IP55	*99010771*
		4000	Keyway		*99010779*
		5900	Keyway		*99010783*
	B5	2000	Keyway	IP55	*99010769*
			Smooth		*99010768*
		4000	Keyway		*99010775*
			Smooth		*99010772*
					99010773
					99010774
		5900	Keyway		*99010782*
			Smooth		*99010785*
	B14	2000	Keyway	IP55	*99010770*
		4000	Keyway		*99010781*
		5900	Keyway		*99010784*
					99082579
			Smooth		*99010786*
	B34	5900	Keyway	IP55	*99063219*
	B35	2000	Keyway	IP55	*99045063*
		4000	Keyway		*99010777*
			Smooth		*99010778*
		5900	Keyway		*99045085*
7.5	B3	2000	Keyway	IP55	*99010789*
		4000	Keyway		*99010799*
		5900	Keyway		*99010803*
	B5	2000	Keyway	IP55	*99010788*
			Smooth		*99010787*
		4000	Keyway		*99010794*
			Smooth		*99010791*
					99010792
					99010793
		5900	Keyway		*99010802*
			Smooth		*99010805*
					99010806
					99058626
	B14	4000	Keyway	IP55	*99010800*
		5900	Keyway		*99010804*
					99082578
	B34	5900	Keyway	IP55	*99063222*
	B35	2000	Keyway	IP55	*99045067*
		4000	Keyway		*99010796*
			Smooth		*99010797*
					99010798
		5900	Keyway		*99045089*
11.0	B5	4000	Keyway	IP55	*99080292*

IEC, 3-phase 430 V, frame size 160

Power [kW]	Mounting designation	Max. speed	Shaft	Class	Kit No
11.0	B3	4000	Keyway	IP55	*99010818*
		5900	Keyway		*99010822*
	B5	4000	Keyway	IP55	*99010812*
			Smooth		*99010809*
					99010810
					99010811
					99082582
		5900	Keyway		*99010821*
			Smooth		*99010807*
					99082581
	B14	5900	Keyway	IP55	*99082580*
	B35	4000	Keyway	IP55	*99010814*
			Smooth		*99010815*
					99010817
		5900	Keyway		*99045093*

NEMA, 3-phase 460V, frame size 100

Mounting designation	Power [hp]	Max. speed	Shaft	Class	Kit No
3HP	182TC	2000	Keyway	IP55	*99010829*
					99010830

NEMA, 3-phase 460V, frame size 112

Mounting designation	Power [hp]	Max. speed	Shaft	Class	Kit No
5 HP	182TC	2000	Keyway	IP55	*99010831*
					99010832
	182TC	4000	Keyway	IP55	*99010835*
					99010836
			Smooth	IP55	*99010833*
					99010834
	182TC	5900	Keyway	IP55	*99010840*
			Smooth		*99010842*
	B14	5900	Smooth	IP55	*99010843*

NEMA, 3-phase 460V, frame size 132

Mounting designation	Power [hp]	Max. speed	Shaft	Class	Kit No
7.5 HP	213TC	2000	Keyway	IP55	*99010844*
					99010845
	213TC	4000	Keyway	IP55	*99010847*
					99010851
			Smooth		*99010846*
					99010848
	213TC	5900	Keyway	IP55	*99010854*
			Smooth		*99010853*
	B14				*99010852*
10 HP	213TC	2000	Keyway	IP55	*99010855*
					99010856
	213TC	4000	Keyway	IP55	*99010858*
					99010862
			Smooth		*99010857*
					99010860
	213TC	5900	Keyway	IP55	*99010865*
			Smooth		*99010864*
	B14	5900	Smooth	IP55	*99010863*

NEMA, 3-phase 460V, frame size 160

Mounting designation	Power [hp]	Max. speed	Shaft	Class	Kit No
15 HP	254TC	4000	Keyway	IP55	*99010869*
					99010870
			Smooth		*99010866*
					99010868
	254TC	5900	Keyway	IP55	*99010873*
			Smooth		*99010872*
	B5	5900	Smooth	IP55	*99010871*

44. MGE, MLE

Model F

50/60 Hz

Kit, Board

Pos.	Description	[kW]	Kit No
273	Control board	11-22	*96348918*
275	Inverter board	11	*96348919*
	Inverter board	22	*96348920*
274	Rectifier board	11-22	*96348921*

Connector plugs

Description	[kW]	Kit No
Connector plugs	11-22	*96348923*

Control panel

Pos.	Description	Kit No
259	Control panel, standard	*96348924*
	Control panel, building service	*96348925*
	Control panel, blind cover	*96348926*

EMC cable gland

Description		Kit No
EMC cable gland	M40 x 1.5	*96348974*

EMC filter

Description	Kit No
EMC filter	*96478309*

Functional modules

Pos.	Description	Kit No
263	Functional module, pump add-on	*96348929*
	Functional module, Multi-E	*96348930*
	Functional module, TPED	*96348931*
	Functional module, GENIbus/RS485	*96348932*
	Functional module, LON	*96348933*
	Functional module, PROFIBUS	*96348934*
	Functional module, Ethernet	*96348935*
	Functional module, advanced add-on	*96348936*
	Functional module, Modbus	*96348948*
	Functional module, GSM	*96348949*

Harmonic filter

Description	Kit No
Harmonic filter	*96348985*

Motor

Pump type		11 kW	15 kW	18.5 kW	22 kW
CRE	2-pole B5	*96844357*	*96844358*	*96844359*	*96844360*
NBE	2-pole B35	*96844385*	*96844387*	*96844388*	*96844389*
	4-pole B35	*96844397*	*96844400*	*96844401*	-
NKE	2-pole B3	*96844390*	*96844391*	*96844392*	*96844393*
	4-pole B3	*96844402*	*96844404*	*96844405*	-
TPE	2-pole B5	*96844379*	*96844380*	*96844382*	*96844384*
	4-pole B5	*96844394*	*96844395*	*96844396*	-

Terminal box

Description	[kW]	Kit No
Terminal box complete	11	*96348913*
Terminal box complete	15-22	*96348914*

Varistor

Pos.	Description	[kW]	Kit No
279	Varistor	11-22	*96348917*

Upgrade kit

Description	Motor type	MGE 11-22 kW	MLE 11-22kW
	Kit No	*96348972*	*96348973*
Cable gland	M16	2	-
Adapter	M16 x 1.5 - NPT 3/4"	-	2
Nut	M16 x 1.5	2	2

Terminal box

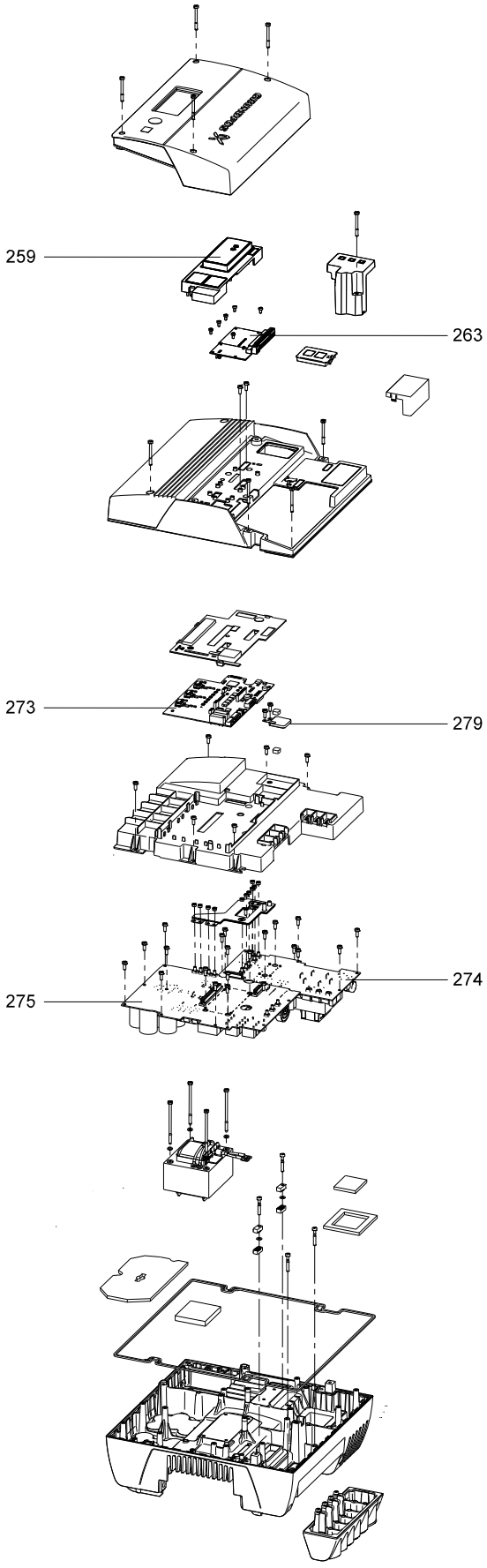

TM044133

45. Mixers and flowmakers

AMD

AMD.05-08.x.x - AMD.18.x.x - AMD.28.x.x

AMD.07.x.x

Mounting belt

Pos.	Description/Kit No	*96692919*
5	Mounting belt	2
6	Mounting device	1
7	Lock nut	2
8	Spring lock washer	2
9	Lock nut	2
11	Screw	2
12	Screw	2
28	Rubber band	1
10	Spring lock washer	2

Propeller

Pos.	Description/Kit No	*96113478*
1	Propeller nut	1
2	Spring washer	1
3	Lock washer	1
4	Propeller	1

Shaft seal

Pos.	Description/Kit No	*96113477*
13	Screws	2
14	O-ring	2
15	Seal cover	1
16	O-ring	2
105	Shaft seal	1
-	Oil	1

AMD.05-08.x.x model A

Cable

Pos.	Description/Kit No	*96548100*
181	Cable	1

Mounting belt

Pos.	Description/Kit No	*96692919*
5	Mounting belt	2
6	Mounting device	1
7	Lock nut	2
8	Spring lock washer	2
9	Lock nut	2
11	Screw	2
12	Screw	2
28	Rubber band	1
10	Spring lock washer	2

Propeller

Pos.	Description/Kit No	AMD.07	AMD.05 AMD.08
		99055190	*99055184*
1	Propeller nut	1	1
2	Spring washer	1	1
3	Lock washer	1	1
4	Propeller	1	1

Service kit

Pos.	Description/Kit No	*99055170*
-	Oil Shell Ondina X420	1
13	Screw	2
14	O-ring	2
16	O-ring	2
3	Lock washer	1
2	Disc spring	1
15	Sealing parts, cap	1
105	Shaft seal complete	1

AMD.18.x.x - AMD.28.x.x

Bearing, motor

Pos.	Description/Kit No		*95065458*
34	Ball bearing 6206 2RS		1
47	Ball bearing 6207 2RS		1

Cable entry, 1.5 mm^2

Pos.	Description/Kit No		*95065457*
15	O-ring	113.97 x 2.62	1
22	Cable entry (rubber) small		1
23	O-ring	37.82 x 1.78	1
24	Thrust washer		1
25	Cable entry (rubber) large		1
26	Cable guide		1
59	Press connection (cable)		6
60	Press connection (signal)		4
	Shrink tube for connections		10
61	Cable relief		1
63	Cable shoe		1

Gasket kit, motor

Pos.	Description/Kit No		*95065455*
12	O-ring	158.42 x 2.62	2
15	O-ring	113.97 x 2.62	1
22	Cable entry (rubber) small		1
23	O-ring	37.82 x 1.78	1
25	Cable entry (rubber) large		1
32	O-ring	63.22 x 1.78	1
45	O-ring	21.95 x 1.78	1
46	Lip seal	62 x 32 x 8	1
48	Lip seal	72 x 40 x 7	1
	O-ring	85.0 x 2.5	1

Shaft seal

Pos.	Description/Kit No	*95035813*
8	Shaft seal	1

AMD.07.x.x

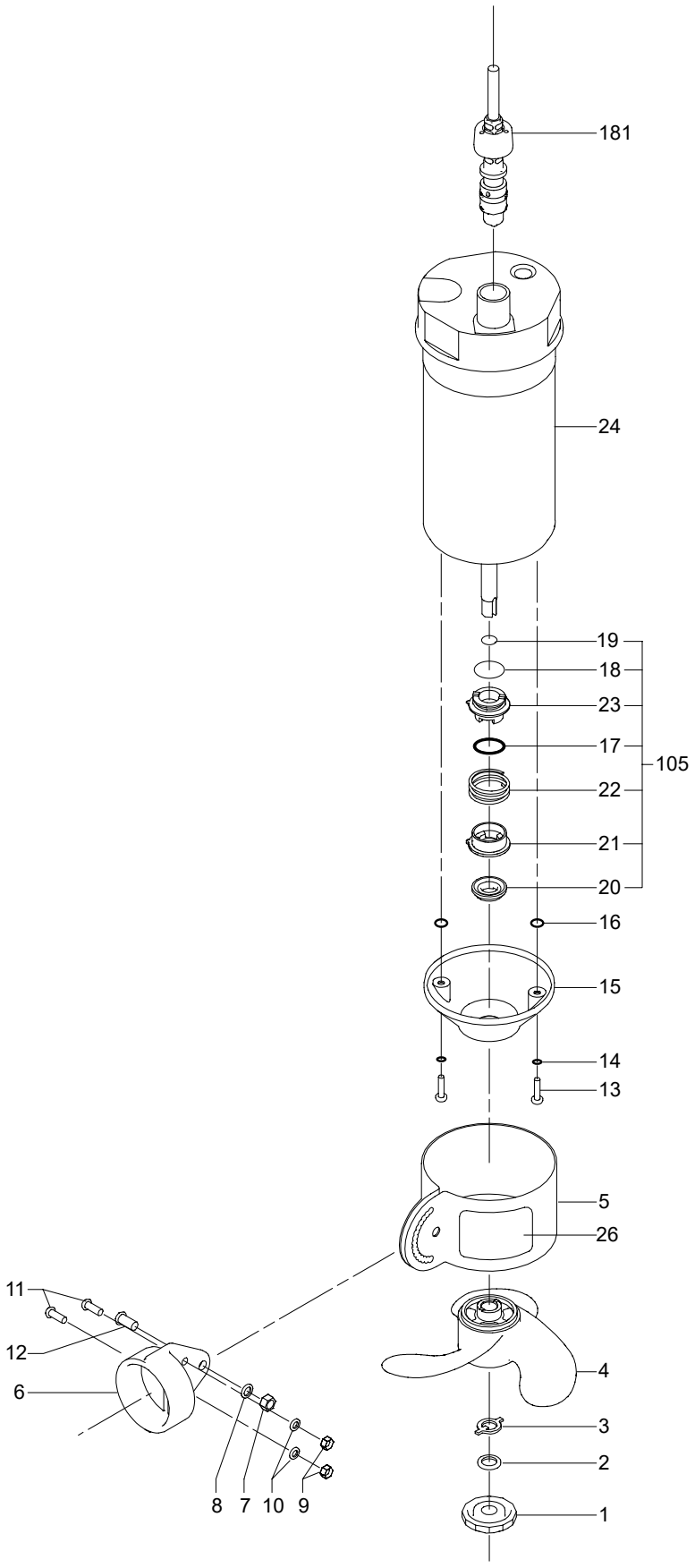
181
24
19
18
23
17
105
22
21
20
16
15
14
13
5
26
11
12
6
4
3
2
1
8
7
10
9
TM028013

AMD.05-08.x.x model A

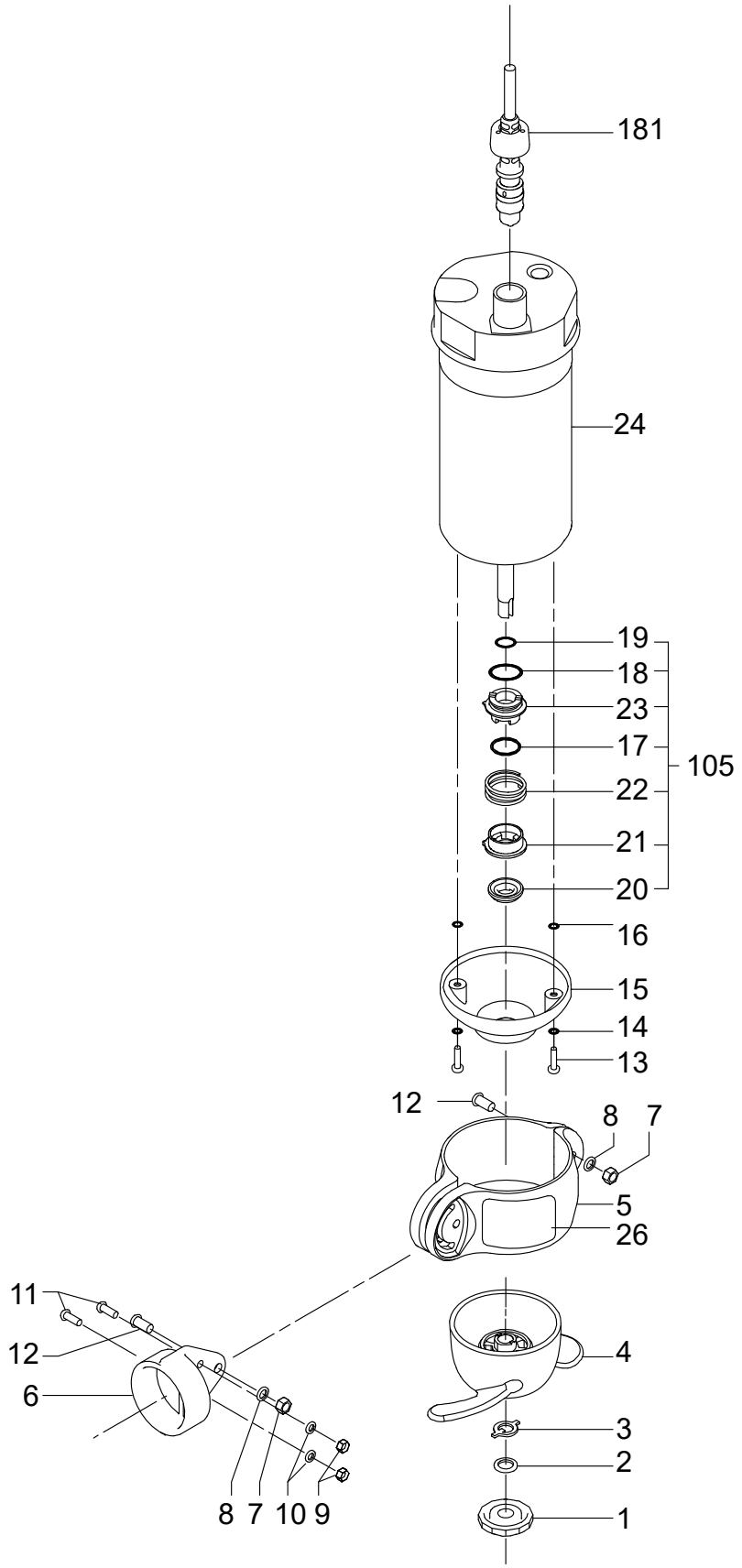

AMD.18.x.x - AMD.28.x.x

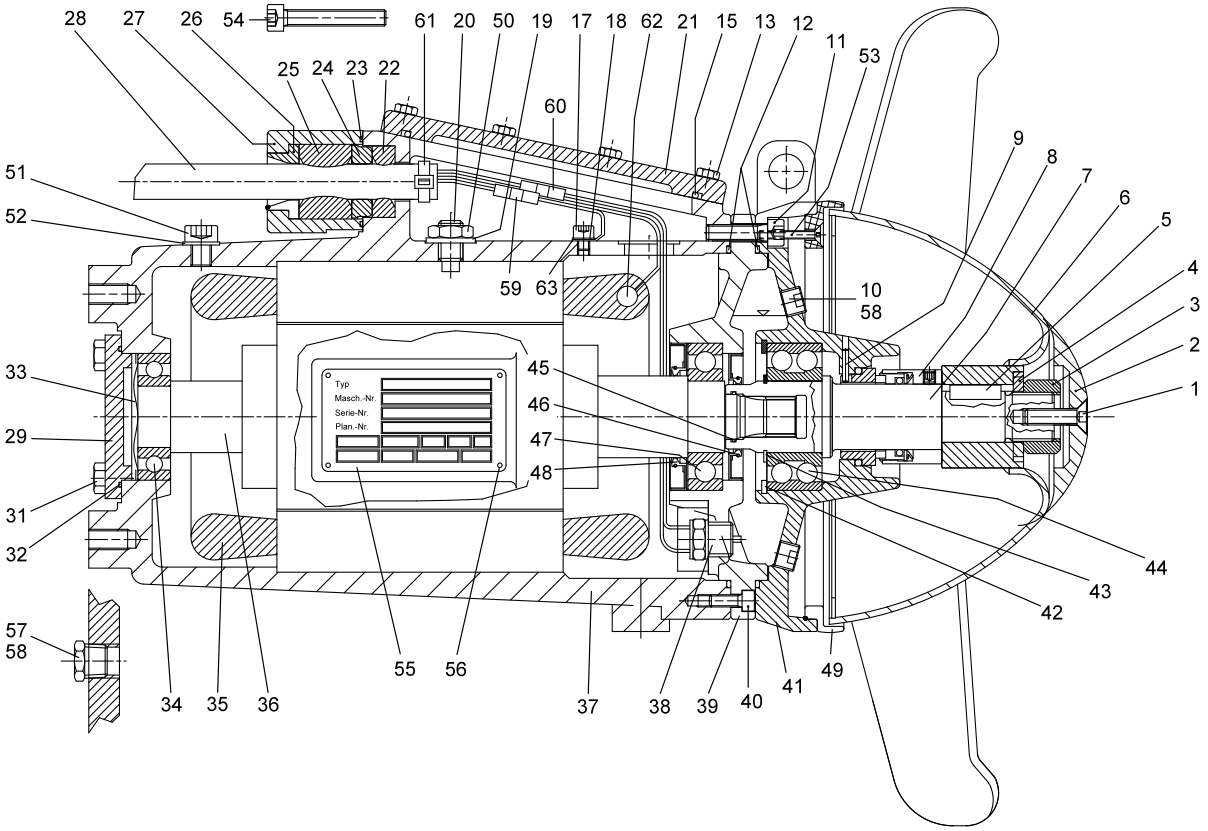

TM035485

AMD.15-45 (50/60 Hz) and AMD.34-55 (60 Hz North America)

Cable entry, 1.5 mm²

Pos.	Description/Kit No		95065449
1002	Cable flange		1
1003	Cable guide		1
1004	cable seal large		1
1005	Thrust washer		1
1006	cable seal small		1
1007	O-ring	37.8 x 1.78	1
1008	Hexagon socket head cap screw		4
1010	Hexagon socket head cap screw		2
1011	Lock washer		2
1014	Lock washer		4
1015	Cable clamp		1
1028	Hexagon socket head cap screw		1
1029	Lock washer		1
1030	Cable shoe		1
1125	O-ring	158.0 x 4.0	1
1177	Cable joint		10
1178	Shrink tube for connections		10

Cable entry, 1.5 mm², Ex version

(and for guide flange 100/100)

Pos.	Description/Kit No		95065450
1002	Cable flange		1
1003	Cable guide		1
1004	cable seal large		1
1005	Thrust washer		1
1006	cable seal small		1
1008	Hexagon socket head cap screw		3
1010	Countersunk screw		2
1011	Lock washer		2
1012	Lock nut		2
1014	Lock washer		3
1015	Cable clamp		1
1028	Hexagon socket head cap screw		1
1029	Lock washer		1
1030	Cable shoe		1
1125	O-ring	158.0 x 4.0	1
1172	Distance plate		1
1177	Cable joint		10
1178	Shrink tube for connections		10
1179	Cable joint		11
1180	Shrink tube for connections		11

Gasket kit, standard and Ex version (50 Hz only)

Pos.	Description/Kit No		95065448
1007	O-ring	37.8 x 1.78	1
1022	O-ring	192.0 x 4.0	1
1056	Seal washer	74.0 x 3.0	1
1071	O-ring		1
1109	Hub cover ELS		1
1111	Countersunk screw		1
1125	O-ring	158.0 x 4.0	1
1142	O-ring	138.0 x 3.0	1
1143	O-ring	192.0 x 4.0	1

Shaft seal, outer, standard and Ex version (50 Hz only)

Model 1 and 2, new sealing system

Pos.	Description/Kit No	95037572
1098	Mechanical shaft seal	1
1146	Protection ring ELS	1
1168	O-ring	1
1169	Lip seal	1
1170	V-ring	1
1171	INA ring	1

Shaft seal, outer (50 Hz only)

Model 0, old sealing system

Pos.	Description/Kit No	95065454
1098	Mechanical shaft seal	1
1146	Protection ring	1
1148	Protection sleeve	1
1149	Hexagon socket head cap screw	3
1150	Lock washer	3

Shaft seal, inner

Pos.	Description/Kit No		95065452
1048	Mechanical shaft seal (motor)		1
1050	Shim		1
1051	Retaining ring		1
1142	O-ring	138.0 x 3.0	1
1143	O-ring	192.0 x 4.0	1

AMD.xx.45.xx non-ATEX

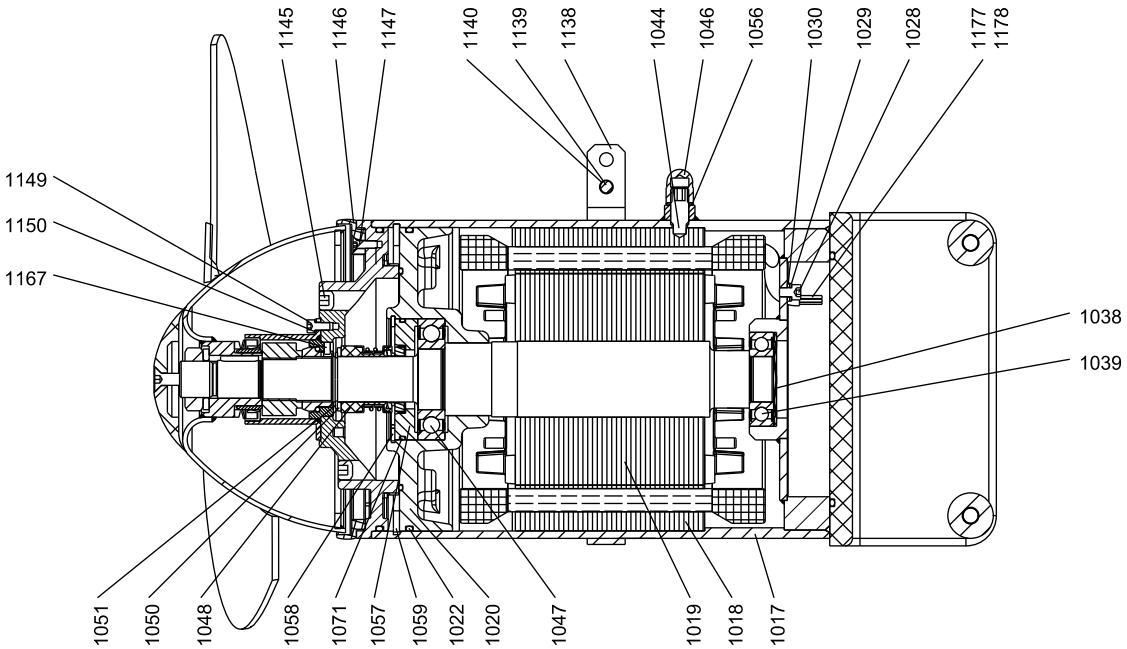

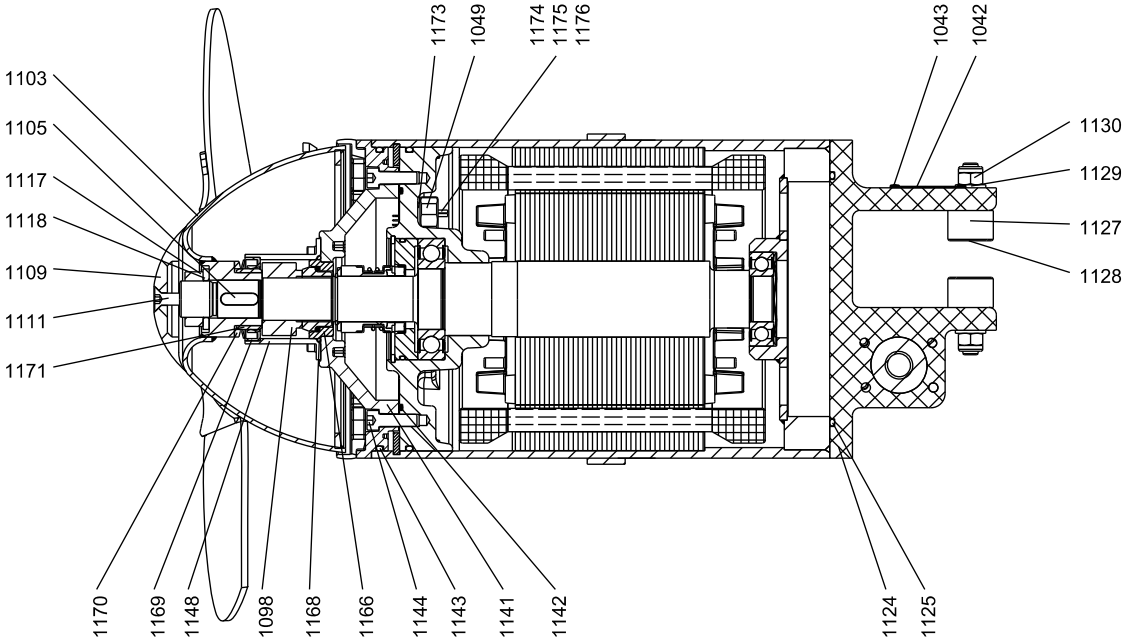

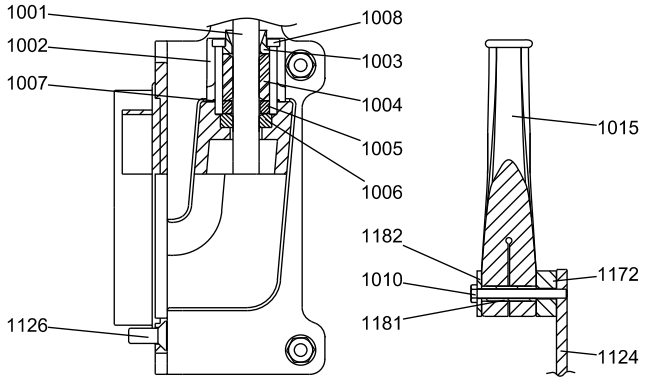

TM030031

AMD.xx.45.xxx.Ex

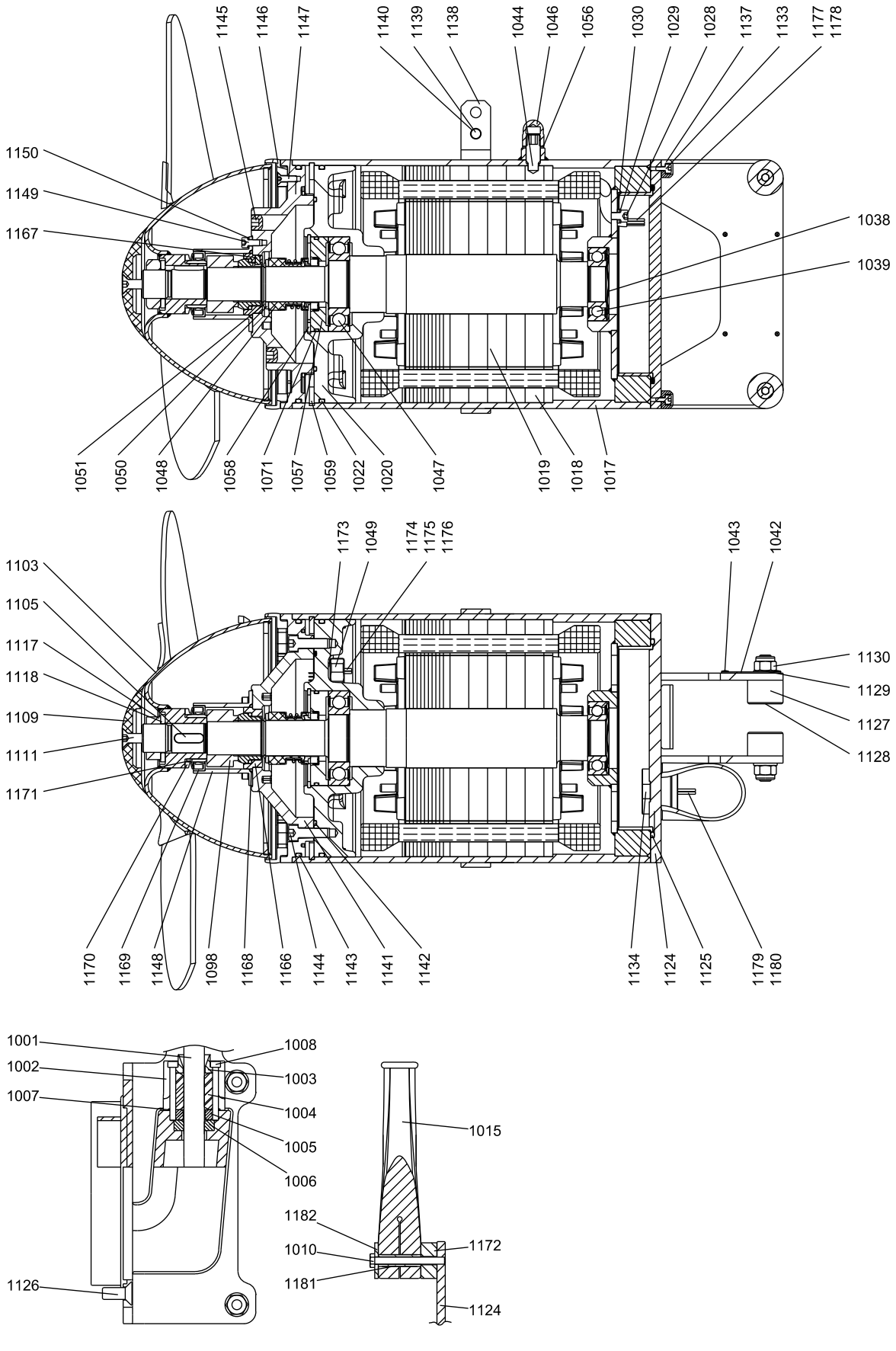

Bearing

Pos.	Description/Kit No		95065451
1038	Compensation disc		1
1039	Ball bearing 6206 2RS		1
1047	Ball bearing 6207 2RS		1

Cable, 10 m (12 x 1.5 mm² ∅17.3)

Pos.	Description/Kit No		95038410
1001	Cable	12x1.5 mm² ∅17.3	10 m /30 ft
1030	Cable shoe	1.5 mm² /M6	1
1177	Cable joint	1.5 mm²	10

Cable ,15 m (12 x 1.5 mm² ∅17.3)

Pos.	Description/Kit No		95038411
1001	Cable	12x1.5 mm² ∅17.3	15 m /50 ft
1030	Cable shoe	1.5 mm² /M6	1
1177	Cable joint	1.5 mm²	10

Cable, 25 m (12 x 1.5 mm² ∅17.3)

Pos.	Description/Kit No		95038412
1001	Cable	12x1.5 mm² ∅17.3	25 m /80 ft
1030	Cable shoe	1.5 mm² /M6	1
1177	Cable joint	1.5 mm²	10

Guide flange kit 60/60 SS cast

Pos.	Description/Kit No		95039395
1002	Cable flange AMD		1
1007	O-ring	37.82x1.78	1
1008	Cylinder head screw	M5 x 45	4
1010	Hexagon head screw	M6 x 55	2
1015	Bend protection D17		1
1124	Guide flange 60/60 SS cast		1
1125	O-ring	158.0 x 4.0	1
1126	Countersunk screw	M10 x 25	8
1127	Guide roller	∅30 x 20	4
1128	Countersunk screw	M10 x 40	4
1129	Washer	∅10.5/20 x 2	4
1130	Lock nut	M10	4
1133	Cylinder head screw	M5 x 10	4
1134	Grommet [1)]	∅33.3 x 11.5	1
1137	Guide plate 60/60 AMD	54 x 10 x 40	2
1172	Distance plate AMD	45 x 30 x 13.5	1
1181	Distance bush f. bend protection	∅10/6.4 x 30	2
1182	Distance plate f. bend protection	50 x 30 x 3	1

1) For non-ATEX version only

Guide flange 100/100, AISI 316

Pos.	Description/Kit No		95038626
1124	Guide flange		1
1125	O-ring	158.0 x 4.0	1
1126	Countersunk screw	M10 x 25	8
1127	Guide roller	∅30 x 20	4
1128	Countersunk screw	M10 x 40	4
1129	Washer	∅10.5/20x2	4
1130	Lock nut	M10	4
1133	Hexagon socket head cap screw	M5 x 8	4
1137	Guide plate 100/100	15x10x94	2

Guide flange 100/100, AISI 316, Ex version

Pos.	Description/Kit No	95038627
1124	Guide flange	1
1125	O-ring	1
1126	Countersunk screw	8
1127	Guide roller	4
1128	Countersunk screw	4
1129	Washer	4
1130	Lock nut	4
1133	Hexagon socket head cap screw	4
1137	Guide plate	2

Mounting kit, AMD

Pos.	Description/Kit No	95038630
1138	Lifting bracket	1
1139	Hexagon socket head cap screw	1
1140	Lock nut	1

Sealing flange kit, AMD, SS cast

Pos.	Description/Kit No		95038760
1141	Sealing flange AMD SS cast		1
1142	O-ring	138.0 x 3.0	1
1143	O-ring	192.0 x 4.0	1
1145	Plug	1/4" Gas	2

Water-in-oil sensor

Pos.	Description/Kit No	95038409
1049	Water-in-oil sensor	1
1173	Seal washer	1

AMD.xx.45.xxx non-ATEX

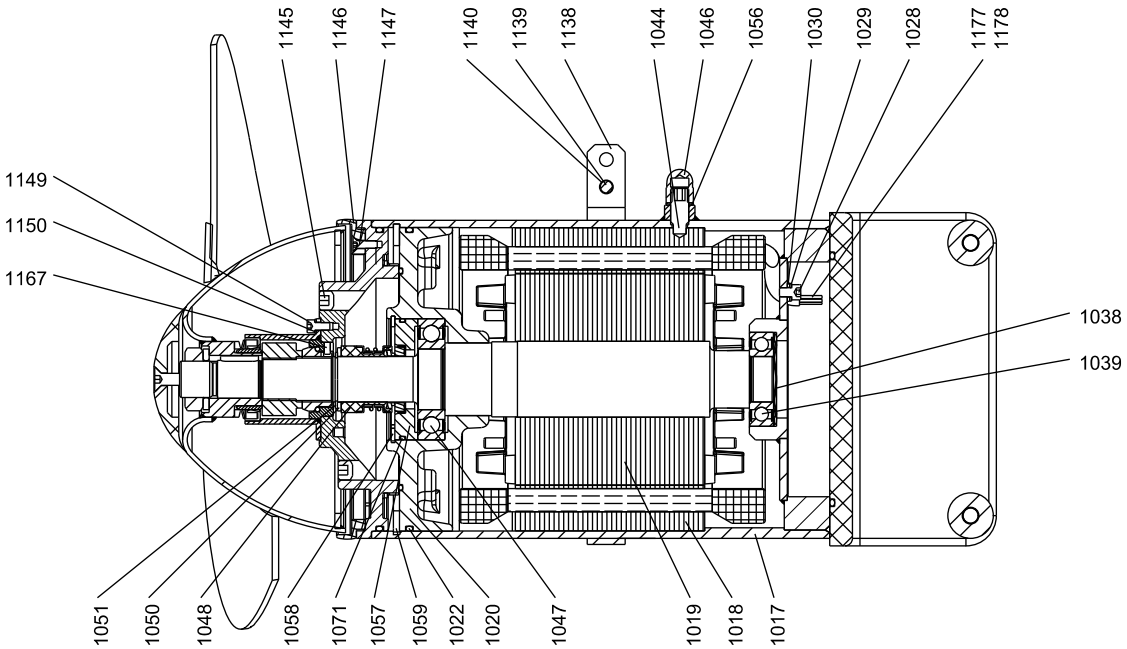

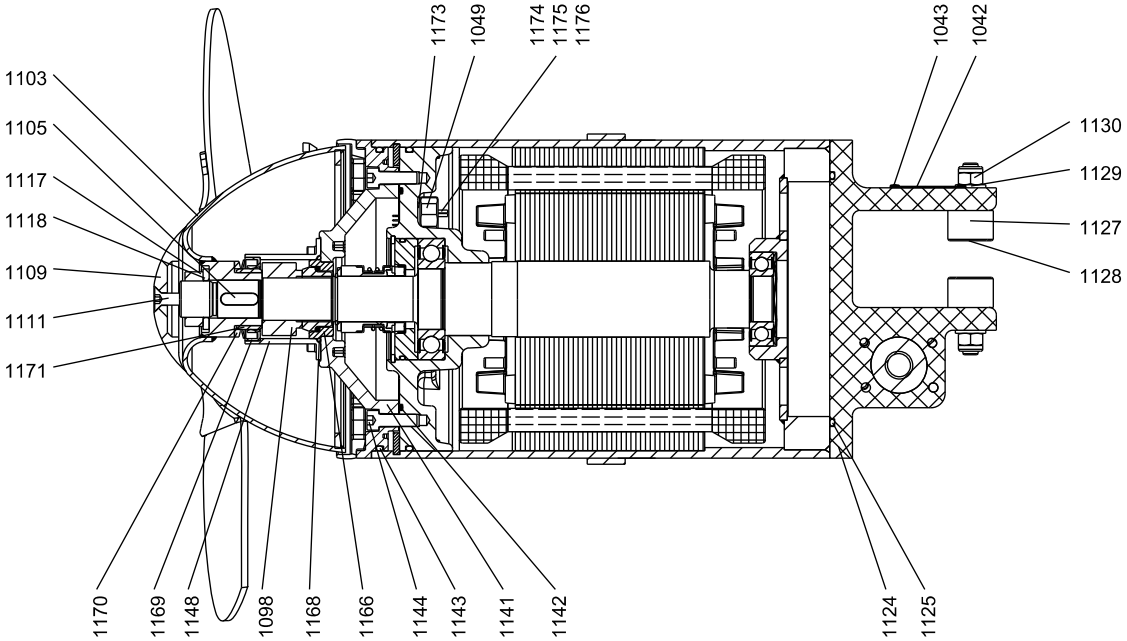

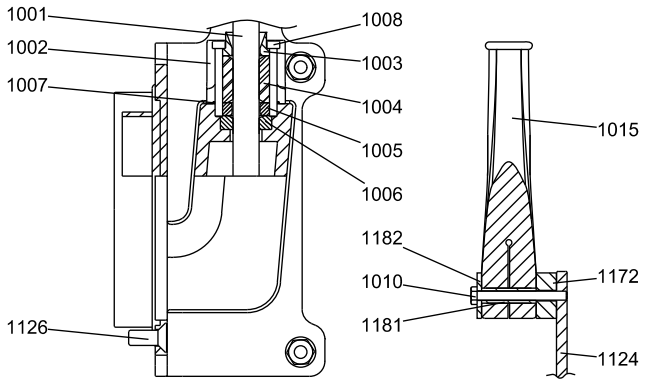

TM030031

AMD.xx.45.xxx.Ex

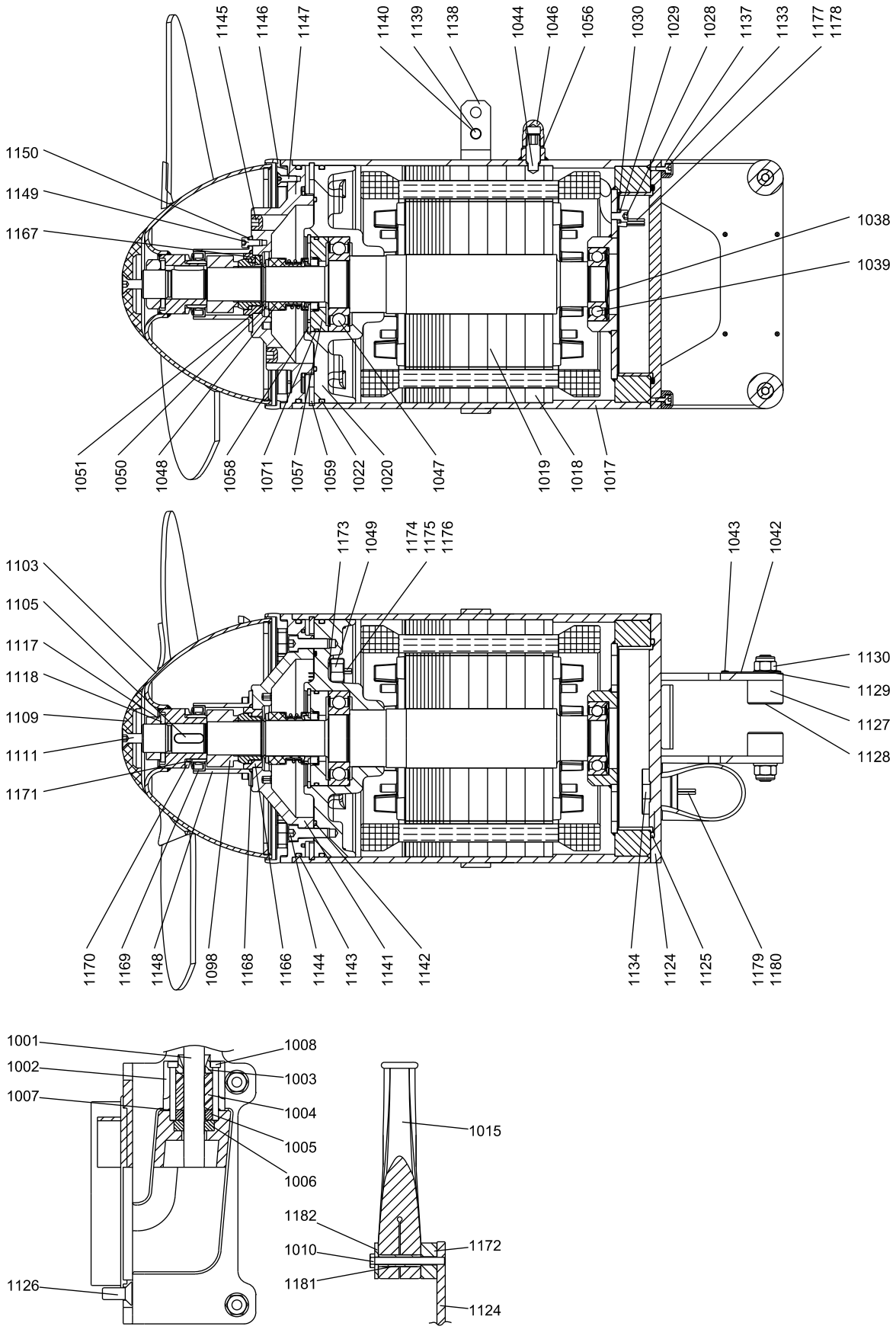

TM037506

Gasket kit, with propeller 10 °

Note: Upgrade kit, old to new sealing system
AMD.15-20 50 Hz (standard and Ex)
AMD.25-30 60 Hz (standard)
AMD.34-40 60 Hz US (standard)

Pos.	Description/Kit No	*95037482*
1098	Mechanical shaft seal	1
1103	Propeller	1
1141	Sealing flange AMD SS cast	1
1142	O-ring	1
1143	O-ring	1
1146	Protection ring ELS	1
1148	Protection sleeve	1
1149	Hexagon socket head cap screw	3
1150	Lock washer	3
1168	O-ring	1
1169	Lip seal	1
1170	V-ring	1

Gasket kit, with propeller 12 °

Note: Upgrade kit, old to new sealing system
AMD.25-30 50 Hz (standard and Ex)
AMD.35-40 60 Hz (standard)
AMD.47-55 60 Hz US (standard)

Pos.	Description/Kit No	*95037483*
1098	Mechanical shaft seal	1
1103	Propeller	1
1141	Sealing flange AMD SS cast	1
1142	O-ring	1
1143	O-ring	1
1146	Protection ring ELS	1
1148	Protection sleeve	1
1149	Hexagon socket head cap screw	3
1150	Lock washer	3
1168	O-ring	1
1169	Lip seal	1
1170	V-ring	1

Gasket kit, with propeller 14 °

Note: Upgrade kit, old to new sealing system.
AMD.35-40 50 Hz (standard and Ex)

Pos.	Description/Kit No	*95037484*
1098	Mechanical shaft seal	1
1103	Propeller	1
1141	Sealing flange AMD SS cast	1
1142	O-ring	1
1143	O-ring	1
1146	Protection ring ELS	1
1148	Protection sleeve	1
1149	Hexagon socket head cap screw	3
1150	Lock washer	3
1168	O-ring	1
1169	Lip seal	1
1170	V-ring	1

Gasket kit, with propeller 16 °

Note: Upgrade kit, old to new sealing system.
AMD.45 50 Hz (standard and Ex)

Pos.	Description/Kit No	*95037485*
1098	Mechanical shaft seal	1
1103	Propeller	1
1141	Sealing flange AMD SS cast	1
1142	O-ring	1
1143	O-ring	1
1146	Protection ring ELS	1
1148	Protection sleeve	1
1149	Hexagon socket head cap screw	3
1150	Lock washer	3
1168	O-ring	1
1169	Lip seal	1
1170	V-ring	1

Propeller, 10 ° AISI 316

AMD.15-20 50 Hz (standard and Ex)
AMD.25-30 60 Hz (standard)
AMD.34-40 60 Hz US (standard)

Pos.	Description/Kit No	*95038616*
1103	Propeller	1
1105	Parallel key	1
1109	Hub cover ELS	1
1111	Countersunk screw	1
1117	Nut	1
1118	Lock washer	1
1171	INA ring	1

Propeller, 12 ° AISI 316

AMD.25-30 50 Hz (standard and Ex)
AMD.25-30 60 Hz (standard)
AMD.35-40 60 Hz US (standard)

Pos.	Description/Kit No	*95038617*
1103	Propeller	1
1105	Parallel key	1
1109	Hub cover ELS	1
1111	Countersunk screw	1
1117	Nut	1
1118	Lock washer	1
1171	INA ring	1

Propeller, 14 ° AISI 316

AMD.35-40 50 Hz

Pos.	Description/Kit No	*95038618*
1103	Propeller	1
1105	Parallel key	1
1109	Hub cover ELS	1
1111	Countersunk screw	1
1117	Nut	1
1118	Lock washer	1
1171	INA ring	1

Propeller, 16 ° AISI 316

AMD.45 50 Hz

Pos.	Description/Kit No	*95038619*
1103	Propeller	1
1105	Parallel key	1
1109	Hub cover ELS	1
1111	Countersunk screw	1
1117	Nut	1
1118	Lock washer	1
1171	INA ring	1

AMD.xx.45.xxx non-ATEX

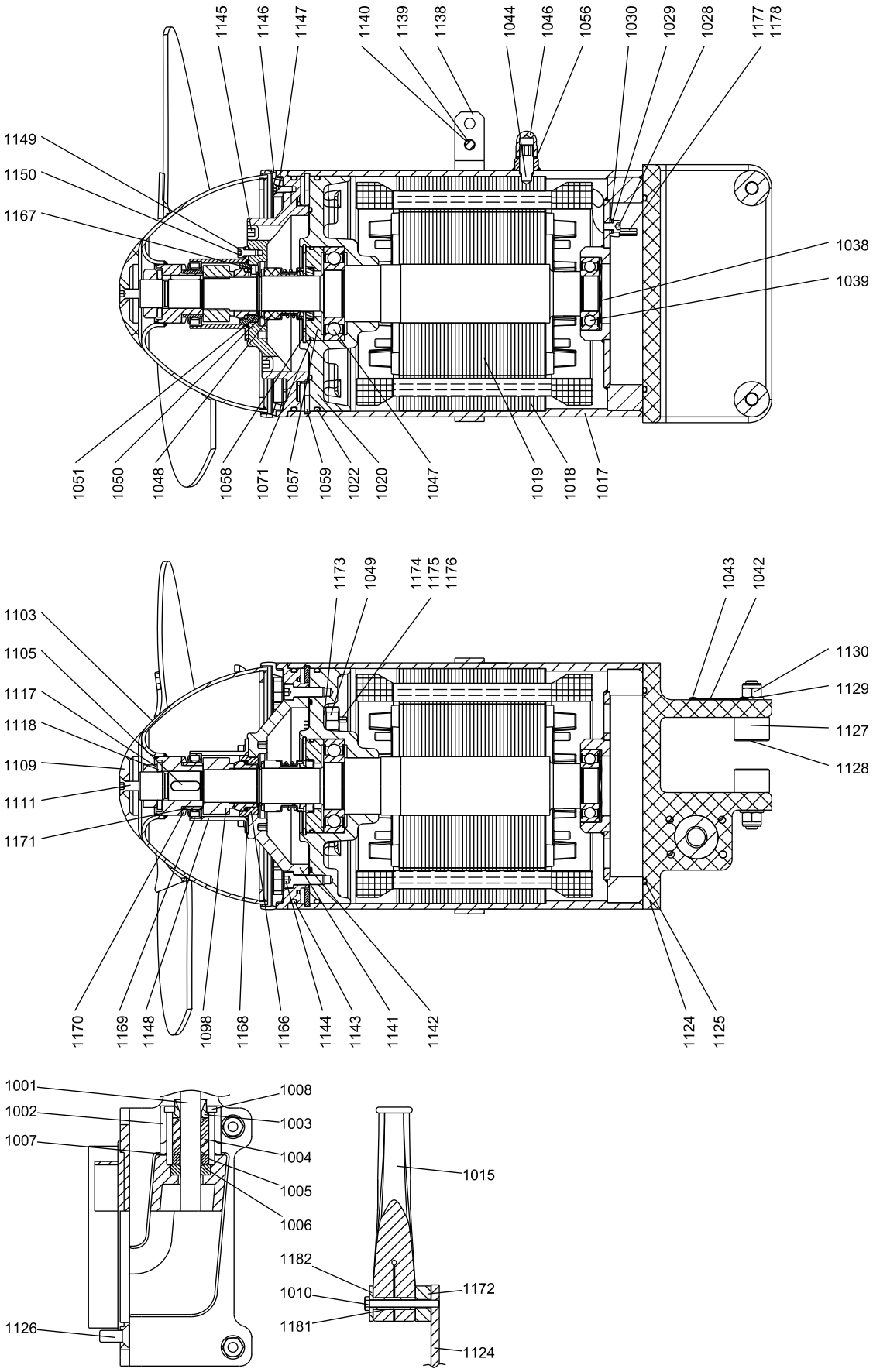

AMD.xx.45.xxx.Ex

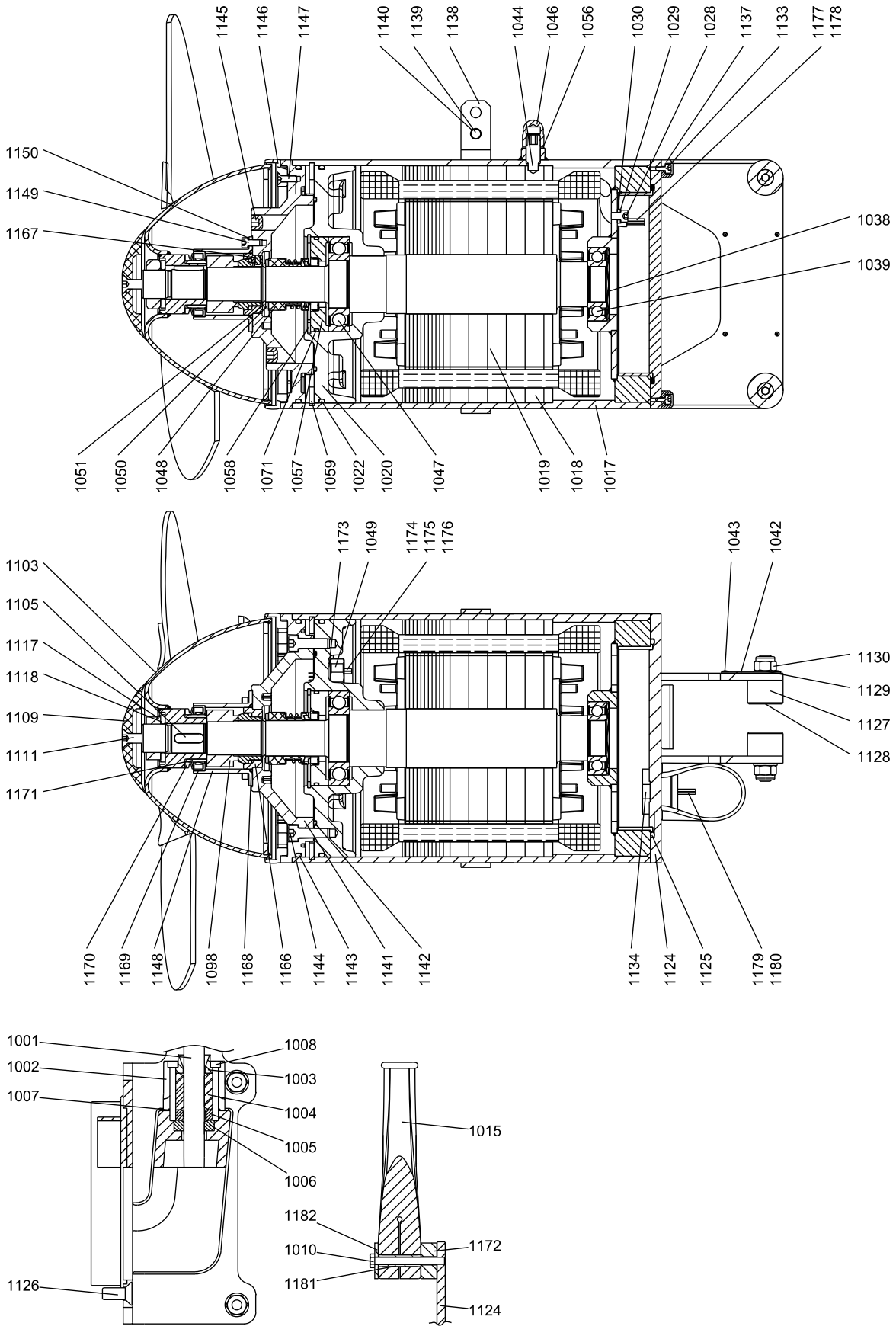

TM037506

Motor, 8-pole 2.5 kW / 3.4 Hp

AMD.15-25 50 Hz, AMD.25 60 Hz, AMD.34 60 Hz US

Pos.	Description/Kit No	*95038620*
1017	Motor housing	1
1018	Stator	1
1019	Rotor with shaft	1
1020	Motor flange	1
1022	O-ring	1
1038	Compensation disc	1
1039	Ball bearing	1
1044	Set screw	1
1046	Nut	1
1047	Ball bearing	1
1049	Water-in-oil sensor	1
1056	Seal washer	1
1057	Intermediate ring	1
1058	Retaining ring	1
1059	Retaining ring	1
1071	O-ring	1
1173	Seal washer	1
1174	Cable joint	2
1175	Cable joint	2
1176	Shrink tube for connections	2

Motor, 8-pole 4.5 kW / 6.0 Hp

AMD.30-45 50 Hz, AMD.30-40 60 Hz, AMD.40-55 60 Hz US

Pos.	Description/Kit No	*95038621*
1017	Motor housing	1
1018	Stator	1
1019	Rotor with shaft	1
1020	Motor flange	1
1022	O-ring	1
1038	Compensation disc	1
1039	Ball bearing	1
1044	Set screw	1
1046	Nut	1
1047	Ball bearing	1
1049	Water-in-oil sensor	1
1056	Seal washer	1
1057	Intermediate ring	1
1058	Retaining ring	1
1059	Retaining ring	1
1071	O-ring	1
1173	Seal washer	1
1174	Cable joint	2
1175	Cable joint	2
1176	Shrink tube for connections	2

Motor, 8-pole 2.5 kW, Ex version

AMD.15-25 50 Hz (50 Hz Only)

Pos.	Description/Kit No	*95038622*
1017	Motor housing	1
1018	Stator	1
1019	Rotor with shaft	1
1020	Motor flange	1
1022	O-ring	1
1038	Compensation disc	1
1039	Ball bearing	1
1044	Set screw	1
1046	Nut	1
1047	Ball bearing	1
1049	Water-in-oil sensor	1
1056	Seal washer	1
1057	Intermediate ring	1
1058	Retaining ring	1
1059	Retaining ring	1
1071	O-ring	1
1173	Seal washer	1
1174	Cable joint	2
1175	Cable joint	2
1176	Shrink tube for connections	2

Motor, 8-pole 4.5 kW, Ex version

AMD.30-45 50 Hz (50 Hz Only)

Pos.	Description/Kit No	*95038623*
1017	Motor housing	1
1018	Stator	1
1019	Rotor with shaft	1
1020	Motor flange	1
1022	O-ring	1
1038	Compensation disc	1
1039	Ball bearing	1
1044	Set screw	1
1046	Nut	1
1047	Ball bearing	1
1049	Water-in-oil sensor	1
1056	Seal washer	1
1057	Intermediate ring	1
1058	Retaining ring	1
1059	Retaining ring	1
1071	O-ring	1
1173	Seal washer	1
1174	Cable joint	2
1175	Cable joint	2
1176	Shrink tube for connections	2

AMD.xx.45.xxx non-ATEX

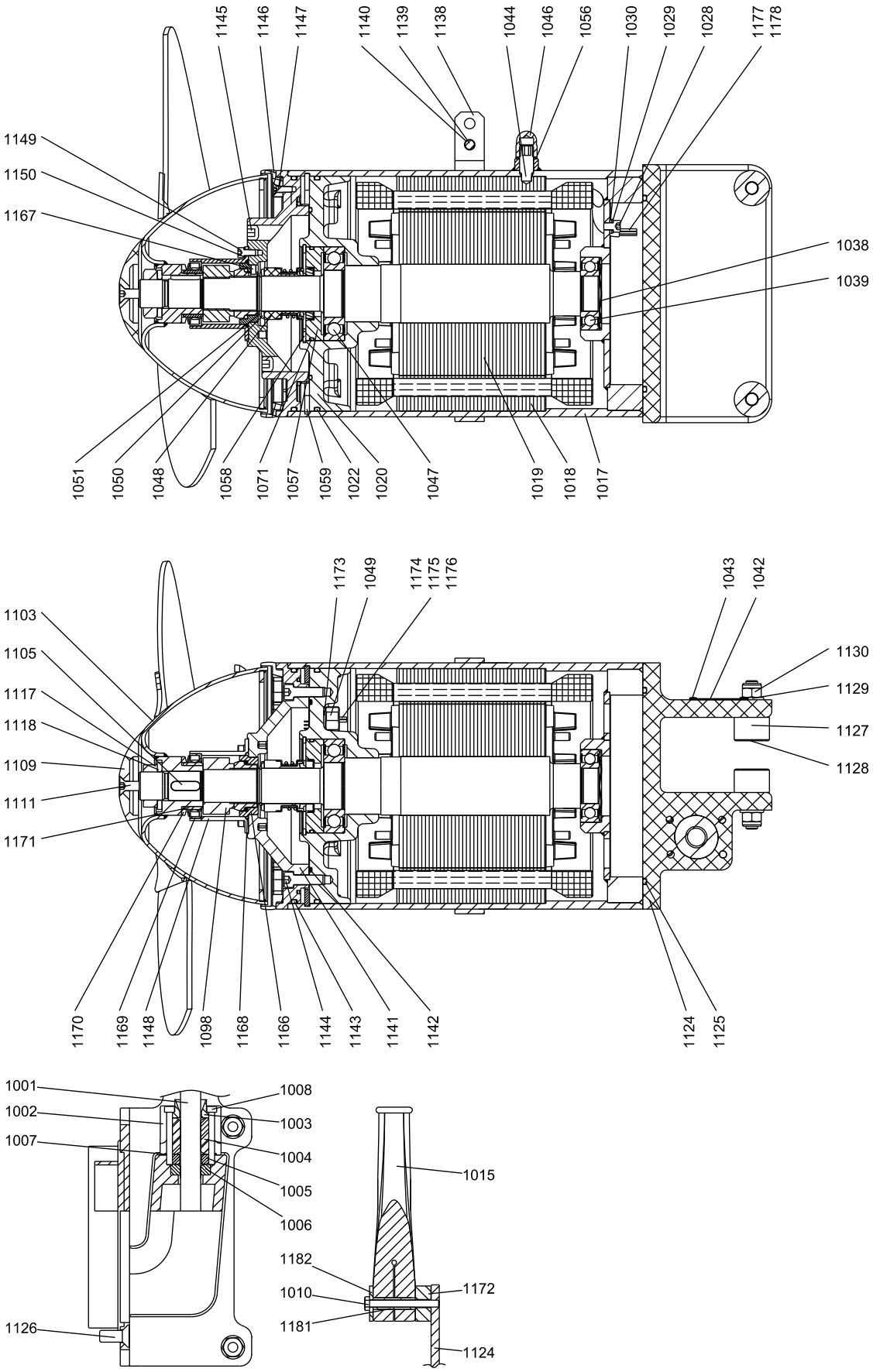

AMD.xx.45.xxx.Ex

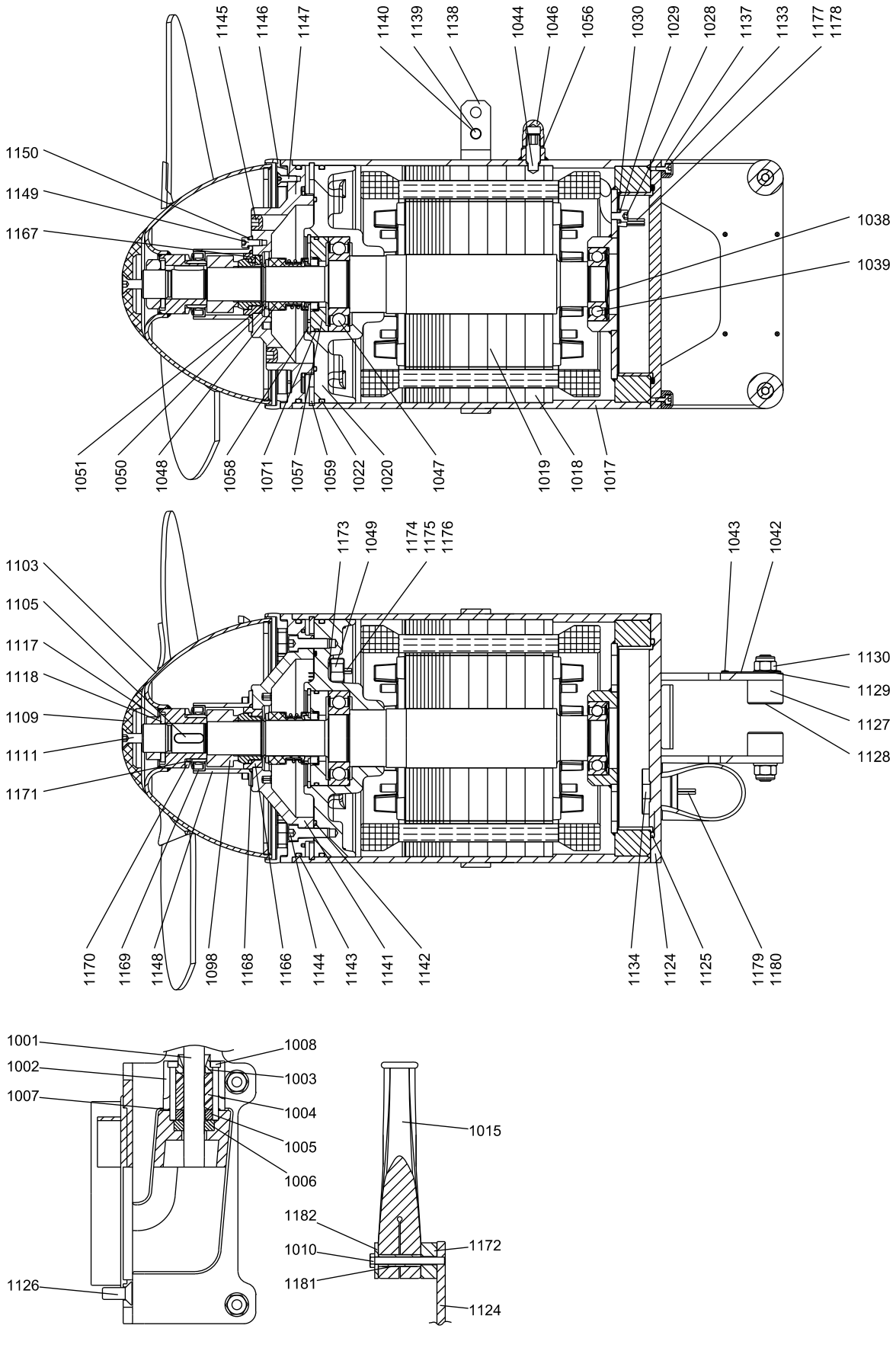

AMG

AMG.15-40 (50/60 Hz) and AMG.20-50 (60 Hz North America)

Bearing, motor

Pos.	Description/Kit No	95065458
1038	Compensation disc	1
1039	Ball bearing 6206 2RS	1
1047	Ball bearing 6207 2RS	1

Bearing, gearbox

Pos.	Description/Kit No	95065459
1090	Slotted nut	1
1091	Lock washer	1
1092	Tapered roller bearing 30207	1
1094	Tapered roller bearing 30207	1

Cable entry, 1.5 mm2

Pos.	Description/Kit No		95065457
1003	Cable guide		1
1004	cable seal, large		1
1005	Thrust washer		1
1006	cable seal, small		1
1007	O-ring	37.82 x 1.78	1
1008	Hexagon socket head cap screw		2
1009	Cable relief		1
1025	O-ring	113.97 x 2.62	1
1026	Cable joint		6
1027	Cable joint		4
1030	Cable shoe		1
-	Shrink tube for connections		10

Gear housing

Pos.	Description/Kit No	95038404
1088	Gear housing	1
1089	Retaining ring	1
1090	Slotted nut	1
1091	Lock washer	1
1092	Tapered roller bearing	1
1093	Gear shaft	1
1094	Tapered roller bearing	1
1101	Drain plug with magnet	1
1102	Plug	2
1119	PTFE tape	1

Radial seal

Pos.	Description/Kit No		95039130
1104	Lip seal	105 x 85 x 13	2
1108	O-ring	85.0 x 2.5	1
	O-ring	105.0 x 3.0	1
	O-ring	184.0 x 3.0	1
1110	Washer	∅8.4 / 16 x 1.0	1
1157	Gasket	96 x 75 x 2	1

Gasket kit

Pos.	Description/Kit No		95065455
1004	cable seal, large		1
1006	cable seal, small		1
1007	O-ring	37.82 x 1.78	1
1022	O-ring	158.42 x 2.62	2
1025	O-ring	113.97 x 2.62	1
1037	O-ring	63.22 x 1.78	1
1054	Lip seal	62 x 32 x 8	1
1055	Lip seal	72 x 40 x 7	1
1071	O-ring	21.95 x 1.78	1
1108	O-ring	85.0 x 2.5	1

Gasket kit, Ex version (50 Hz Only)

Pos.	Description/Kit No		95065456
1004	cable seal, large		1
1006	cable seal, small		1
1007	O-ring	37.82 x 1.78	1
1022	O-ring	158.42 x 2.62	2
1025	O-ring	113.97 x 2.62	1
1037	O-ring	63.22 x 1.78	1
1048	Mechanical shaft seal	45 x 32 x 0.5	1
1050	Shim		1
1051	Retaining ring		1
1108	O-ring	85.0 x 2.5	1

Shaft seal

Pos.	Description/Kit No	95065462
1095	Intermediate ring	1
1098	Mechanical shaft seal	1

Slotted nut

Pos.	Description/Kit No	95038413
1106	Slotted nut	2
1107	Lock washer	2

Wear ring

Pos.	Description/Kit No		Standard
			95037374
1097	Wear ring ceramic		1
1104	Lip seal	105 x 85 x 13	2
1108	O-ring	85.0 x 2.5	1
	O-ring	105.0 x 3.0	1
	O-ring	184.0 x 3.0	1
1157	Gasket		1

Water-in-oil sensor

Pos.	Description/Kit No	95038409
1049	Water-in-oil sensor	1
1173	Seal washer	1

AMG non-ATEX

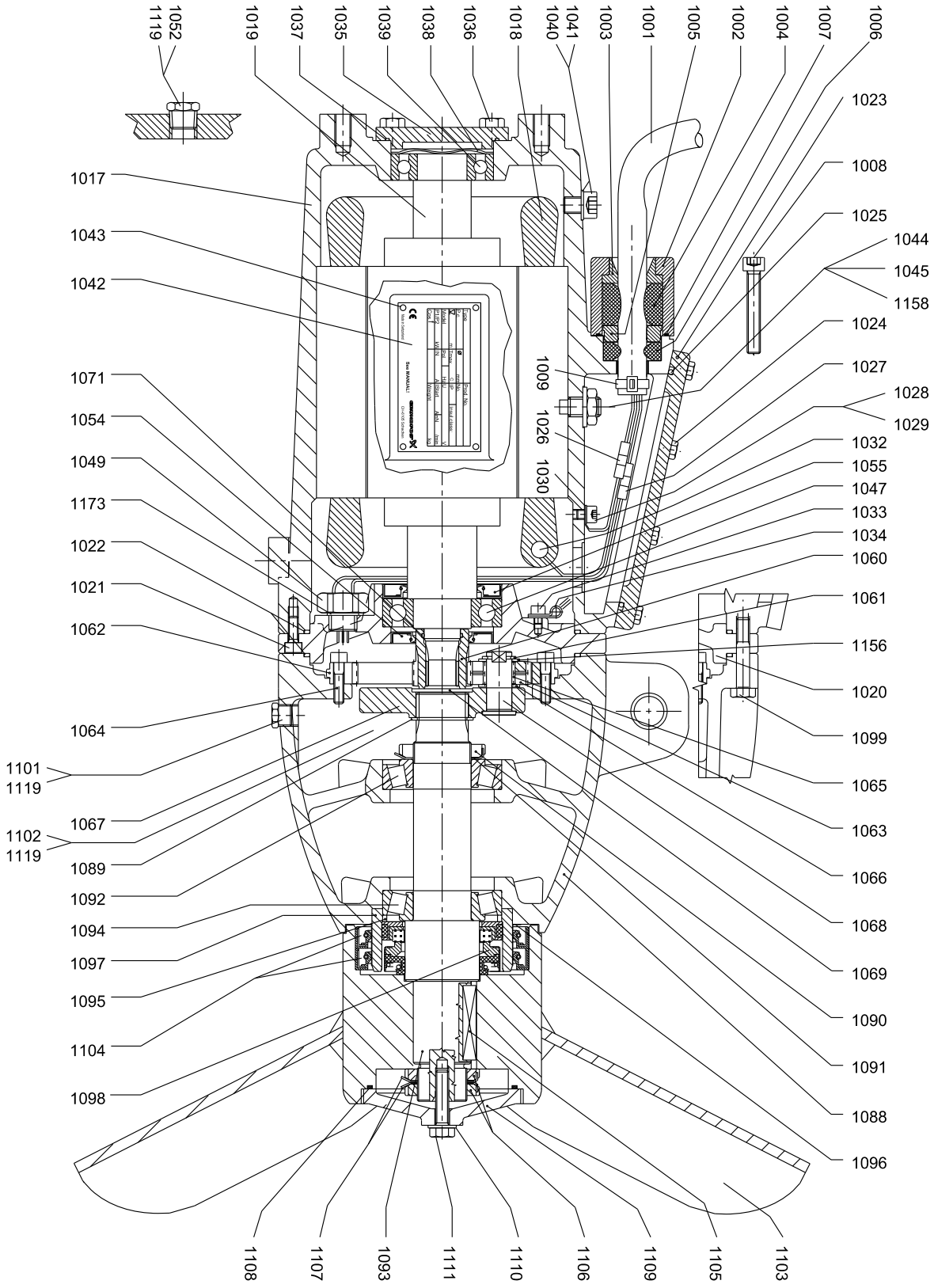

TM035479

AMG.Ex (50 Hz only)

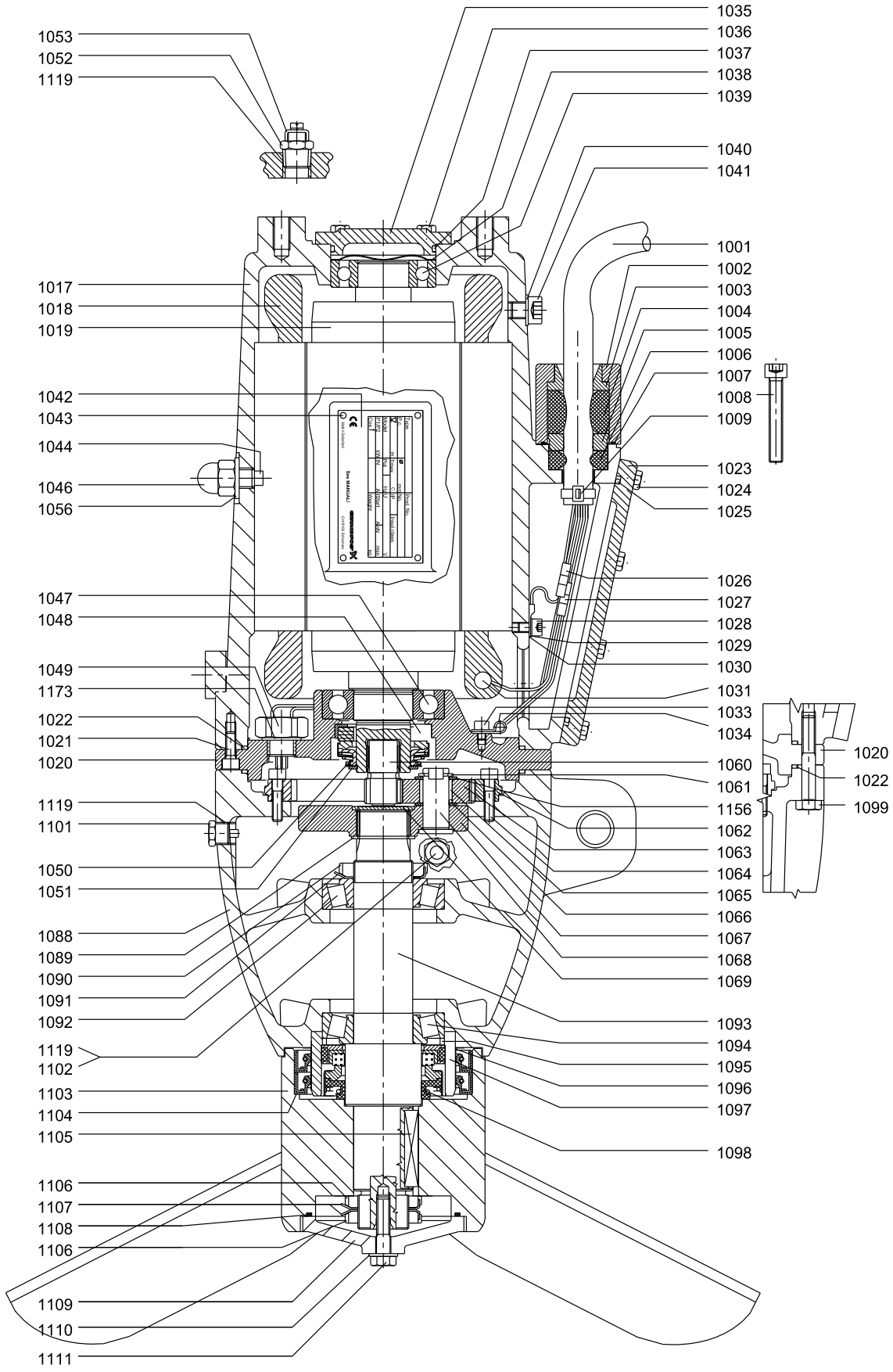

Propeller, AISI 304 - 50 Hz

Pos.	Description/Kit No	AMG.15.40 [1]	AMG.22.45 [1]	AMG.30.47 [1]	AMG.40.52 [1]	AMG.15.55	AMG.22.64	AMG.30.64	AMG.40.71
		95038400	*95038401*	*95038402*	*95038403*	*95038461*	*95038462*	*95038463*	*95038464*
1103	Propeller 1.5 kW	1	-	-	-	1	-	-	-
1103	Propeller 2.2 kW	-	1	-	-	-	1	-	-
1103	Propeller 3.0 kW	-	-	1	-	-	-	1	-
1103	Propeller 4.0 kW	-	-	-	1	-	-	-	1
1104	Lip seal	2	2	2	2	2	2	2	2
1105	Parallel key	1	1	1	1	1	1	1	1
1106	Slotted nut	2	2	2	2	2	2	2	2
1108	O-ring	1	1	1	1	1	1	1	1
1109	Hub cover	1	1	1	1	1	1	1	1
1110	Washer	1	1	1	1	1	1	1	1
1111	Hexagon head screw	1	1	1	1	1	1	1	1

1) Old version. Can be updated to the new version with higher efficiency by ordering the kit for the corresponding new version.

Propeller, AISI 316 - 50 Hz

Pos.	Description/Kit No	AMG.15.40 [2]	AMG.22.45 [2]	AMG.30.47 [2]	AMG.40.52 [2]	AMG.15.55	AMG.22.64	AMG.30.64	AMG.40.71
		95038457	*95038458*	*95038459*	*95038460*	*95038465*	*95038466*	*95038467*	*95038468*
1103	Propeller 1.5 kW	1	-	-	-	1	-	-	-
1103	Propeller 2.2 kW	-	1	-	-	-	1	-	-
1103	Propeller 3.0 kW	-	-	1	-	-	-	1	-
1103	Propeller 4.0 kW	-	-	-	1	-	-	-	1
1104	Lip seal	2	2	2	2	2	2	2	2
1105	Parallel key	1	1	1	1	1	1	1	1
1106	Slotted nut	2	2	2	2	2	2	2	2
1108	O-ring	1	1	1	1	1	1	1	1
1109	Hub cover	1	1	1	1	1	1	1	1
1110	Washer	1	1	1	1	1	1	1	1
1111	Hexagon head screw	1	1	1	1	1	1	1	1

2) Old version. Can be updated to the new version with higher efficiency by ordering the kit for the corresponding new version.

Propeller, AISI 304 - 60 Hz

Pos.	Description	60 Hz SI	AMG.15.37 [3]	AMG.22.41 [3]	AMG.30.43 [3]	AMG.40.47 [3]	AMG.15.40	AMG.22.52	AMG.30.63	AMG.40.64
		60 Hz US	AMG.20.15 [3]	AMG.30.16 [3]	AMG.40.17 [3]	AMG.50.19 [3]	AMG.20.16	AMG.30.20	AMG.40.24	AMG.50.25
		Kit No	*95038716*	*95038717*	*95038718*	*95038719*	*95038724*	*95038725*	*95038726*	*95038727*
1103	Propeller 1.5 kW / 2 Hp		1	-	-	-	1	-	-	-
1103	Propeller 2.2 kW / 3 Hp		-	1	-	-	-	1	-	-
1103	Propeller 3.0 kW / 4 Hp		-	-	1	-	-	-	1	-
1103	Propeller 4.0 kW / 5 Hp		-	-	-	1	-	-	-	1
1104	Lip seal		2	2	2	2	2	2	2	2
1105	Parallel key		1	1	1	1	1	1	1	1
1106	Slotted nut		2	2	2	2	2	2	2	2
1108	O-ring		1	1	1	1	1	1	1	1
1109	Hub cover		1	1	1	1	1	1	1	1
1110	Washer		1	1	1	1	1	1	1	1
1111	Hexagon head screw		1	1	1	1	1	1	1	1

3) Old version. Can be updated to the new version with higher efficiency by ordering the kit for the corresponding new version.

Cable

Pos.	Description/Kit No	*95038410*	*95038411*	*95038412*
1001	Cable	10 m / 30 ft	15 m / 50 ft	25 m / 80 ft
1026	Cable joint	6	6	6
1027	Cable joint	4	4	4
1030	Cable shoe	1	1	1

Gear

Pos.	Description/Kit No	Non-Ex version	Ex version
		95065491	*95065494*
1060	Sun wheel	1	1
1061	Retaining ring	3	3
1062	Ring gear	1	1
1063	Planet gear	3	3
1065	Roller	81	81
1066	Washer	3	3
1067	Planet carrier	1	1
1068	Planet pin	3	3
1069	Cover	1	1
1071	O-ring	1	-
1156	Washer	3	3

AMG non-ATEX

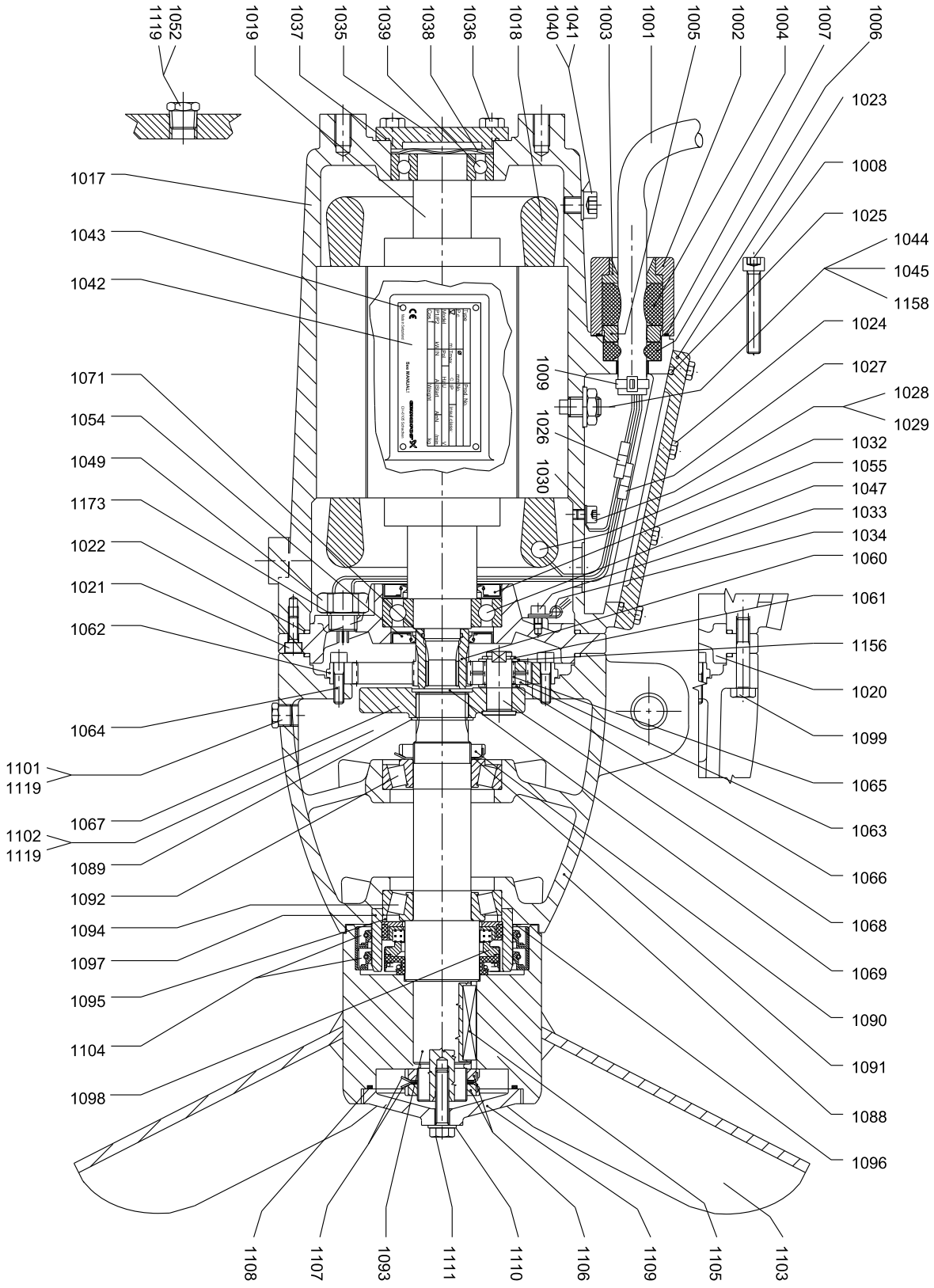

TM035479

AMG.15.xxx.Ex - AMG.40.xxx.Ex

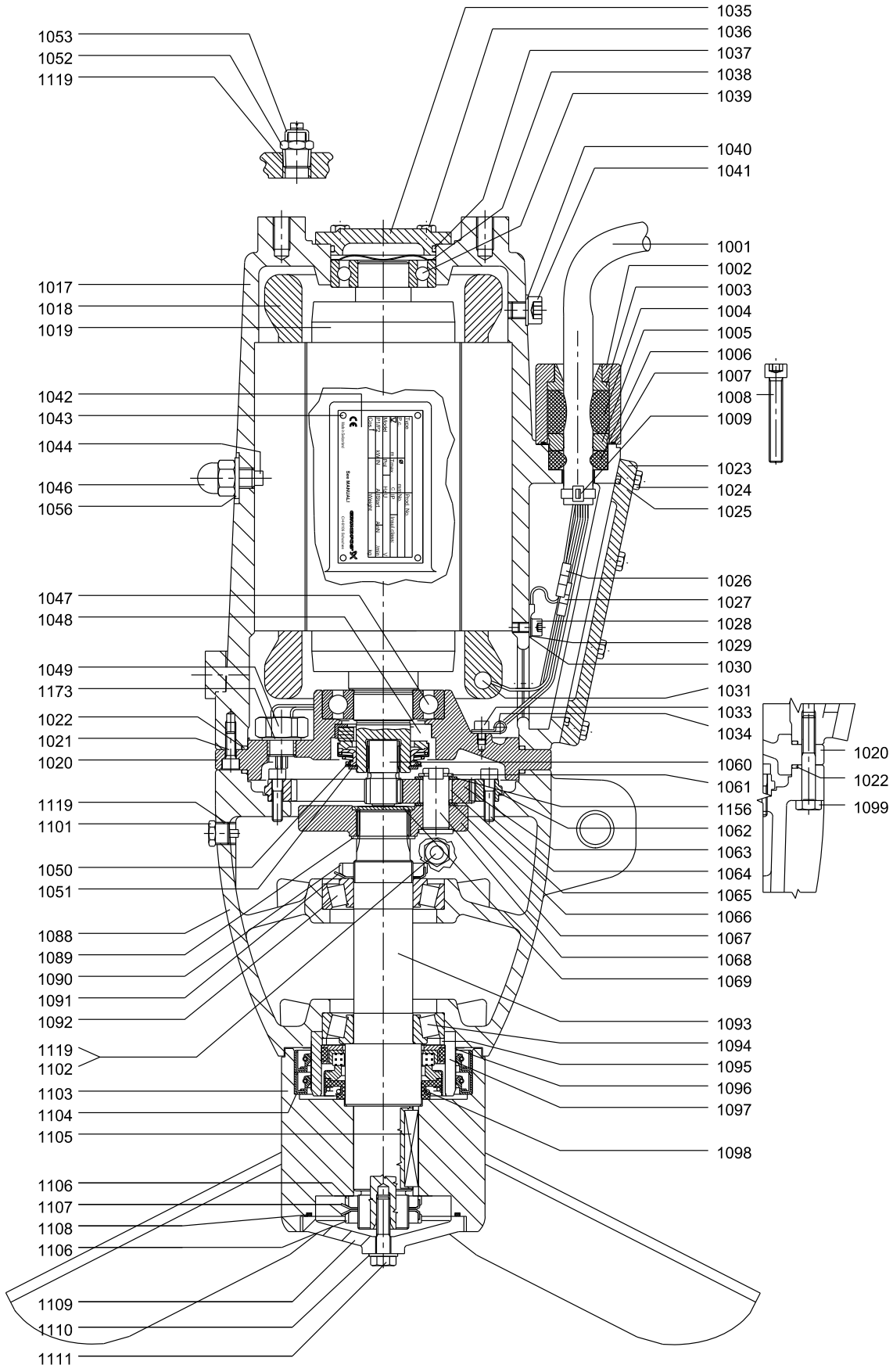

Propeller, AISI 316 - 60 Hz

Pos.	Description	60 Hz SI	AMG.15.37 [1]	AMG.22.41 [1]	AMG.30.43 [1]	AMG.40.47 [1]	AMG.15.40	AMG.22.52	AMG.30.63	AMG.40.64
		60 Hz US	AMG.20.15 [1]	AMG.30.16 [1]	AMG.40.17 [1]	AMG.50.19 [1]	AMG.20.16	AMG.30.20	AMG.40.24	AMG.50.25
		Kit No	*95038720*	*95038721*	*95038722*	*95038723*	*95038728*	*95038729*	*95038730*	*95038731*
1103	Propeller 1.5 kW / 2 Hp		1	-	-	-	1	-	-	-
1103	Propeller 2.2 kW / 3 Hp		-	1	-	-	-	1	-	-
1103	Propeller 3.0 kW / 4 Hp		-	-	1	-	-	-	1	-
1103	Propeller 4.0 kW / 5 Hp		-	-	-	1	-	-	-	1
1104	Lip seal		2	2	2	2	2	2	2	2
1105	Parallel key		1	1	1	1	1	1	1	1
1106	Slotted nut		2	2	2	2	2	2	2	2
1108	O-ring		1	1	1	1	1	1	1	1
1109	Hub cover		1	1	1	1	1	1	1	1
1110	Washer		1	1	1	1	1	1	1	1
1111	Hexagon head screw		1	1	1	1	1	1	1	1

1) Old version. Can be updated to the new version with higher efficiency by ordering the kit for the corresponding new version.

Motor

Pos.	Description		Non-Ex version		Ex version	
		50 Hz	AMG.15.xx AMG.22.xx	AMG.30.xx AMG.40.xx	AMG.15.xx.Ex AMG.22.xx.Ex	AMG.30.xx.Ex AMG.40.xx.Ex
		60 Hz SI	AMG.15.xx AMG.22.xx	AMG.30.xx AMG.40.xx	-	-
		60 Hz US	AMG.20.xx AMG.30.xx	AMG.40.xx AMG.50.xx	-	-
		Kit No	*95038405*	*95038406*	*95038407*	*95038408*
1002	Cable flange		1	1	1	1
1007	O-ring		1	1	1	1
1008	Hexagon socket head cap screw		2	2	2	2
1017	Motor housing		1	1	1	1
1018	Stator		1	1	1	1
1019	Rotor with shaft		1	1	1	1
1020	Motor flange		1	1	1	1
1021	Hexagon socket head cap screw		3	3	3	3
1022	O-ring		2	2	2	2
1023	Terminal box cover		1	1	1	1
1024	Hexagon head screw		8	8	8	8
1025	O-ring		1	1	1	1
1028	Hexagon socket head cap screw		1	1	1	1
1029	Lock washer		1	1	1	1
1033	Hexagon socket head cap screw		1	1	1	1
1034	Cable clamp		1	1	1	1
1035	Bearing cover		1	1	1	1
1036	Hexagon head screw		4	4	4	4
1037	O-ring		1	1	1	1
1038	Compensation disc		1	1	1	1
1039	Ball bearing		1	1	-	-
	Ball bearing		-	-	1	1
1040	Washer		1	1	1	1
1041	Hexagon socket head cap screw		1	1	1	1
1044	Set screw		1	1	1	1
1045	Spring washer		1	1	-	1
1046	Nut		-	-	1	1
1047	Ball bearing		1	1	-	-
	Ball bearing		-	-	1	1
1048	Mechanical shaft seal		-	-	1	1
1049	Water-in-oil sensor		1	1	1	1
1050	Shim		-	-	1	1
1051	Retaining ring		-	-	1	1
1052	Plug		1	1	-	1
1053	Connection for protective earthing		-	-	1	1
1054	Lip seal		1	1	-	-
1055	Lip seal		1	1	-	-
1056	Seal washer		-	-	1	1
1119	PTFE tape		1	1	1	1
1158	Nut		1	1	-	-
1173	Seal washer		1	1	1	1

AMG non-ATEX

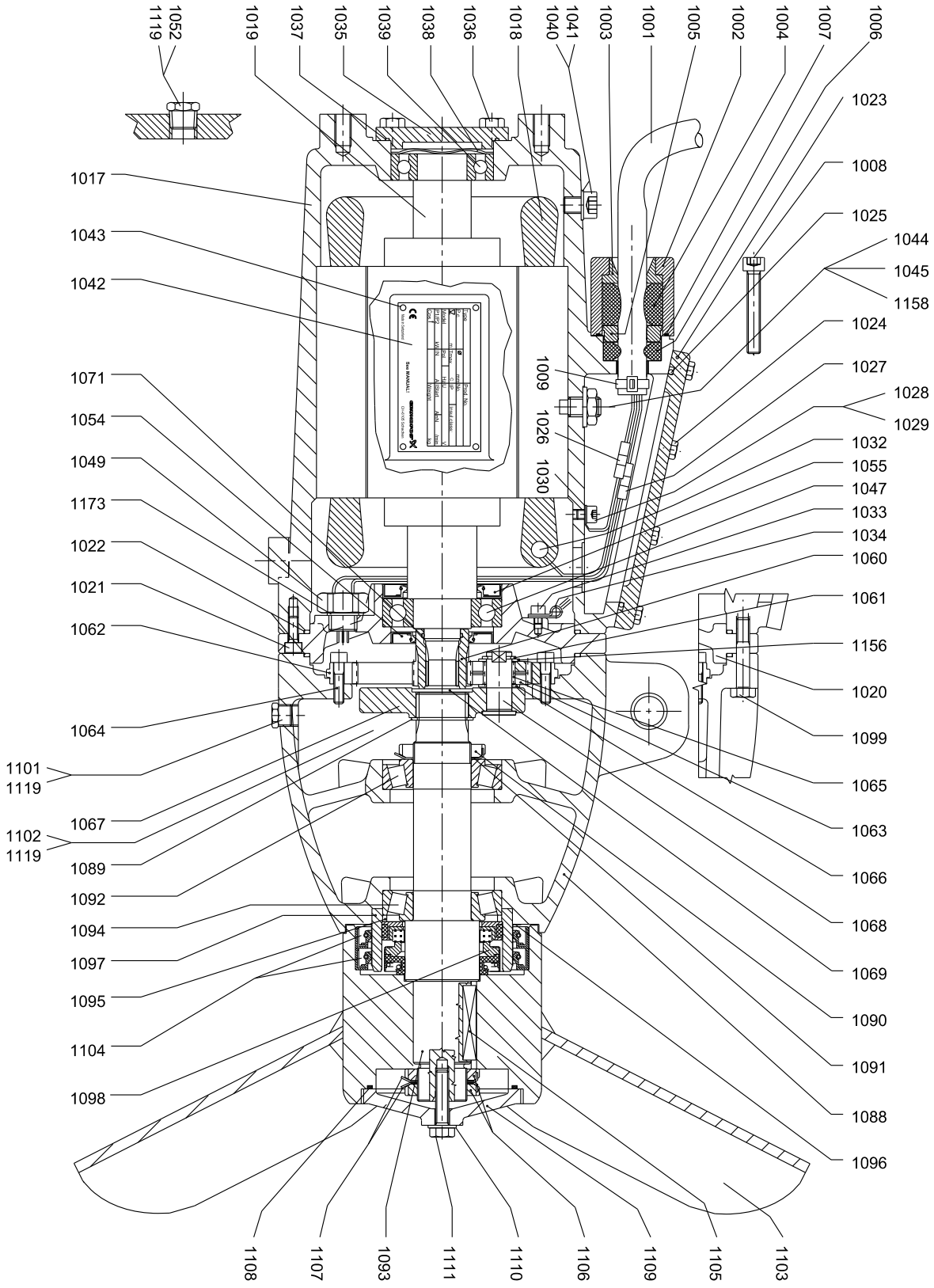

TM035479

AMG.15.xxx.Ex - AMG.40.xxx.Ex (50 Hz only)

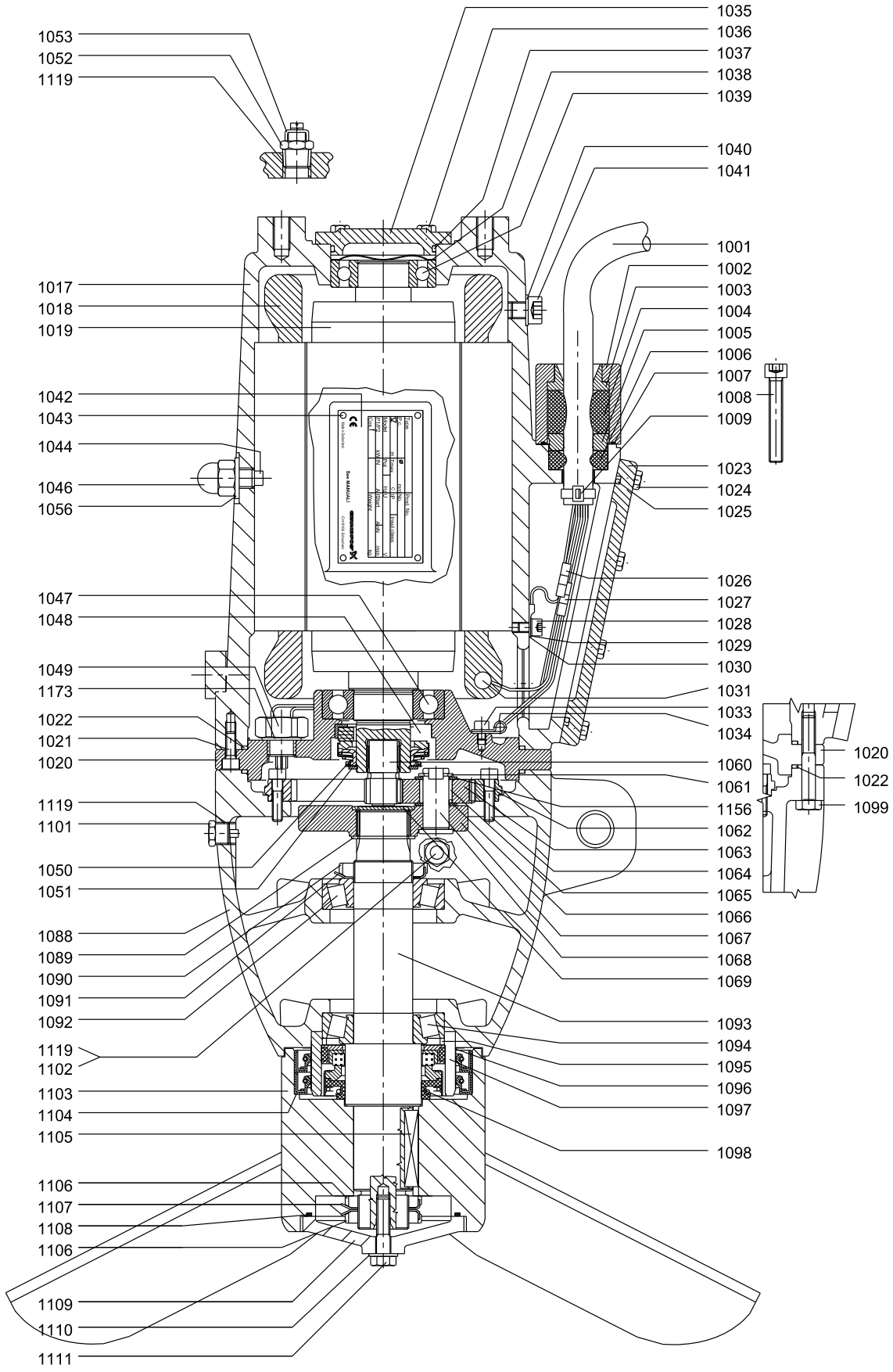

TM035491

AMG.55-110 (50/60 Hz) and AMG.75-150 (60 Hz North America)

Bearing, motor

Pos.	Description/Kit No	95065466
1038	Compensation disc	1
1039	Ball bearing 6208 2RS	1
1047	Ball bearing 6208 2RS	1

Bearing, motor Ex version (50 Hz only)

Pos.	Description/Kit No	96645955
1038	Compensation disc	1
1039	Ball bearing 6208 2RS	1
1047	Ball bearing 6010 2RS	1

Bearing, gearbox

Pos.	Description/Kit No	95065467
1090	Slotted nut; elastic stop	1
1092	Tapered roller bearing 30209	1
1094	Tapered roller bearing 32209	1

Cable entry, 2.5 mm^2

Pos.	Description/Kit No	95065465
1003	Cable guide	1
1004	Cable seal, large	1
1005	Thrust washer	1
1006	cable seal, small	1
1007	O-ring	1
1008	Hexagon socket head cap screw	2
1009	Cable relief	1
1025	O-ring	1
1026	Cable joint	6
1027	Cable joint	4
1030	Cable shoe	1
-	Shrink tube for connections	10

Gasket kit

Pos.	Description/Kit No		95065463
1004	Cable seal, large		1
1006	Cable seal, small		1
1007	O-ring	54.0 x 3.0	1
1022	O-ring	215.57 x 2.62	2
1025	O-ring	139.29 x 3.53	1
1037	O-ring	75.87 x 2.62	1
1054	Lip seal	72 x 45 x 8	1
1055	Lip seal	80 x 50 x 8	1
1071	O-ring	32.93 x 3.53	1
1108	O-ring	94.92 x 2.62	1

Gasket kit, Ex version (50 Hz only)

Pos.	Description/Kit No		95065464
1004	Cable seal, large		1
1006	Cable seal, small		1
1007	O-ring	54.0 x 3.0	1
1022	O-ring	215.57 x 2.62	2
1025	O-ring	139.29 x 3.53	1
1037	O-ring	75.87 x 2.62	1
1048	Mechanical shaft seal		1
1050	Shim		1
1051	Retaining ring		1
1108	O-ring	94.92 x 2.62	1

Gear housing

Pos.	Description/Kit No	95038481
1088	Gear housing	1
1090	Slotted nut KM9; elastic stop	1
1092	Tapered roller bearing	1
1093	Gear shaft	1
1094	Tapered roller bearing	1
1101	Drain plug with magnet	1
1102	Plug	2
1119	PTFE tape	1
1164	Retaining ring	1

Radial seal

Pos.	Description/Kit No		95039131
1104	Lip seal	120 x 100 x 12	2
1108	O-ring	94.92 x 2.62	1
	O-ring	184.0 x 3.0	1
	O-ring	225.0 x 3.0	1
1110	Washer	∅10.5 / 20 x 2.0	1
1157	Gasket	96 x 75 x 2	1

Shaft seal

Pos.	Description/Kit No	95065470
1098	Mechanical shaft seal	1

Slotted nut

Pos.	Description/Kit No	95038489
1106	Slotted nut	2
1107	Lock washer	2

Wear ring

Pos.	Description/Kit No		Standard
			95037375
1097	Wear ring ceramic		1
1104	Lip seal	100 x 120 x 12	2
1108	O-ring	94.92 x 2.62	1
	O-ring	184.0 x 3.0	1
	O-ring	225.0 x 3.0	1
1157	Gasket	96 x 75 x 2	1

Water-in-oil sensor

Pos.	Description/Kit No	95038409
1049	Water-in-oil sensor	1
1173	Seal washer	1

AMG non-ATEX

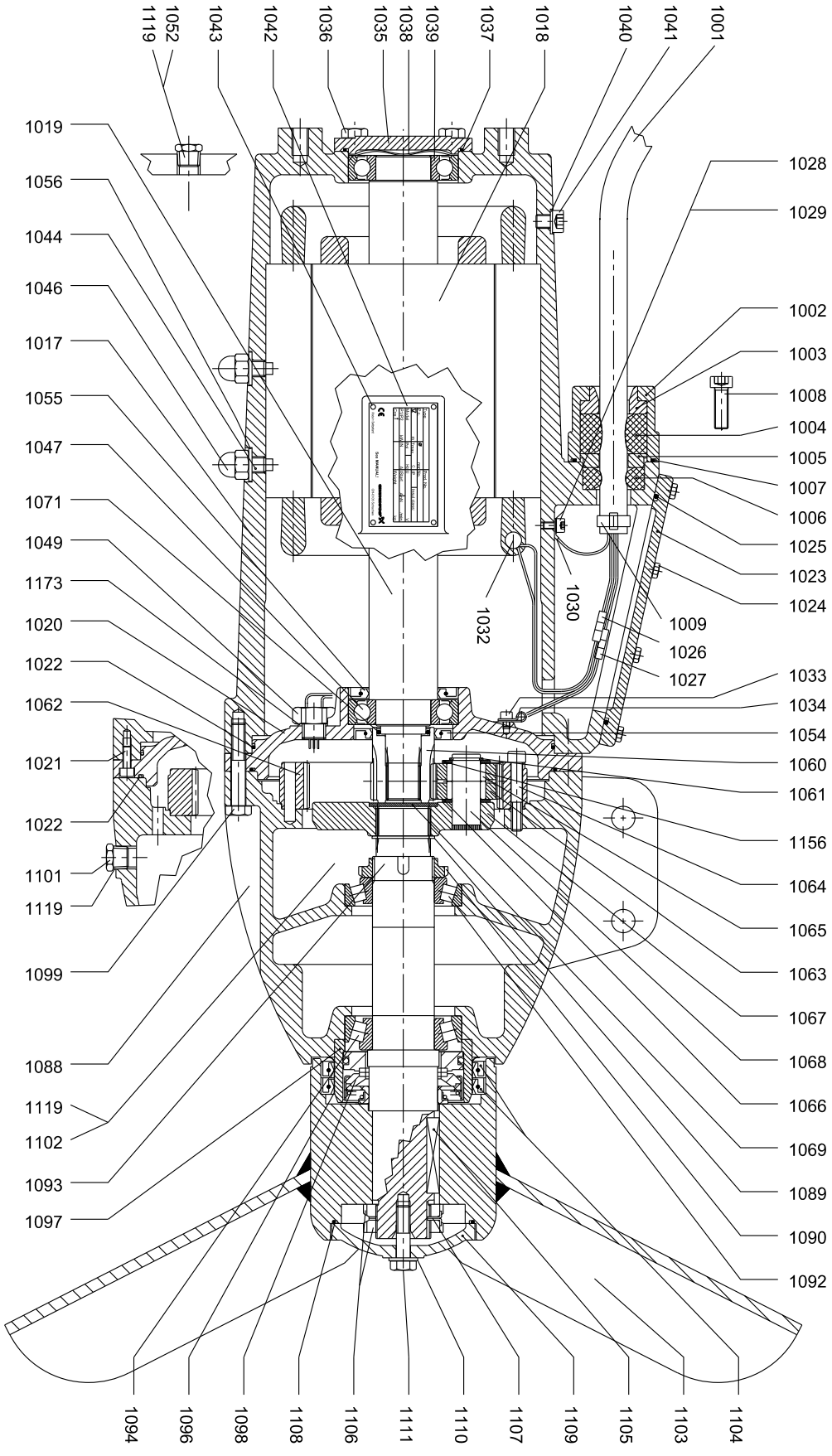
1119
1052
1043
1042
1036
1035
1038
1039
1037
1018
1040
1041
1001
1019
1056
1044
1046
1017
1055
1047
1071
1049
1173
1020
1022
1062
1021
1022
1101
1119
1099
1088
1119
1102
1093
1097
1028
1029
1002
1003
1008
1004
1005
1007
1006
1025
1023
1024
1030
1032
1009
1026
1027
1033
1034
1054
1060
1061
1156
1064
1065
1063
1067
1068
1066
1069
1089
1090
1092
1094
1096
1098
1108
1106
1111
1110
1107
1109
1105
1103
1104
TM035481

AMG.55.xxx.Ex - AMG.110.xxx.Ex (50 Hz only)

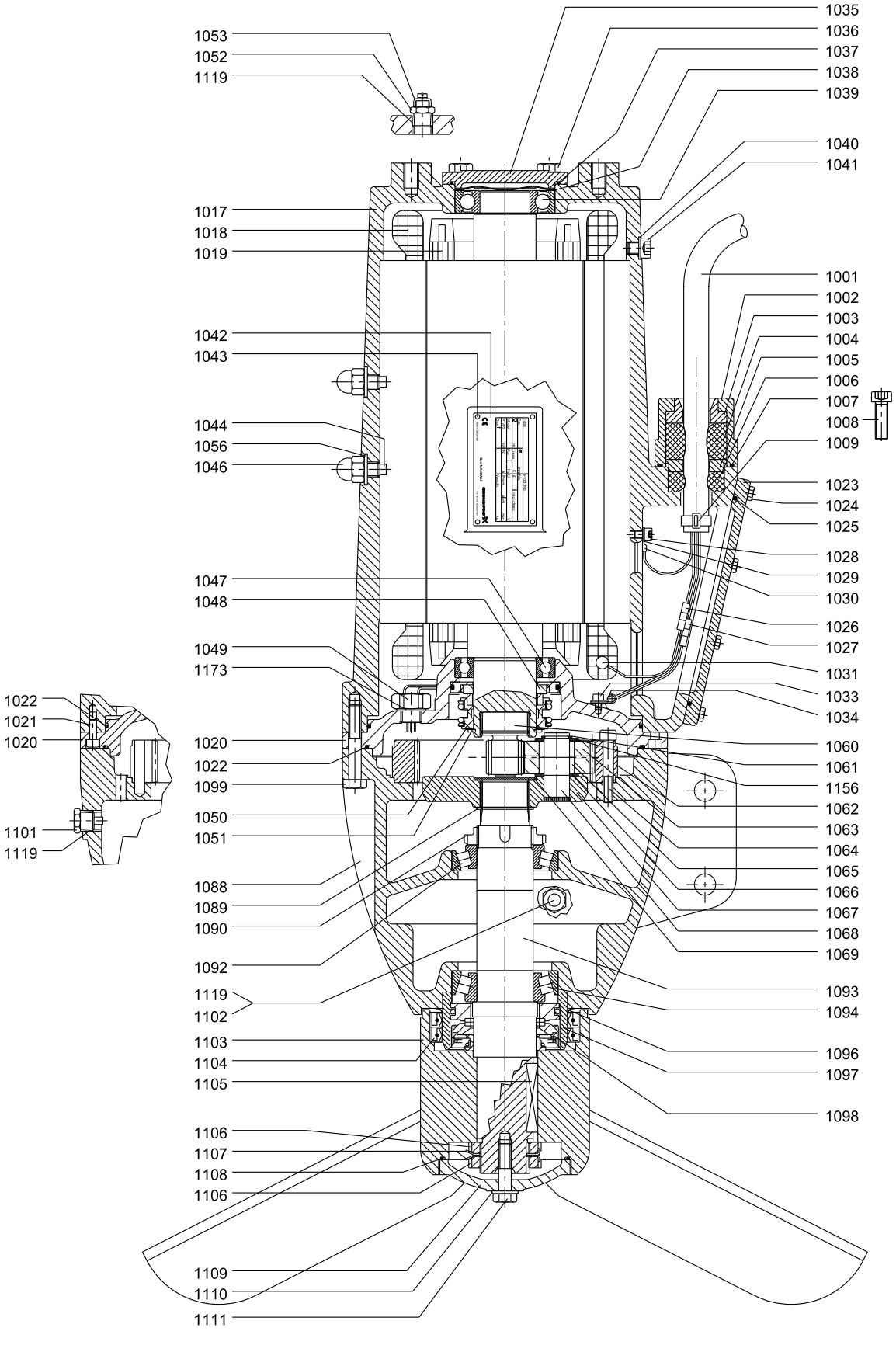

TM035493

Propeller, AISI 304 (50 Hz)

Pos.	Description/Kit No	AMG.55.50 [1]	AMG.75.58 [1]	AMG.110.68 [1]	AMG.55.73	AMG.75.73	AMG.110.84
		95038469	*95038470*	*95038471*	*95038475*	*95038476*	*95038477*
1103	Propeller 5.5 kW	1	-	-	1	-	-
1103	Propeller 7.5 kW	-	1	-	-	1	-
1103	Propeller 11 kW	-	-	1	-	-	1
1104	Lip seal	2	2	2	2	2	2
1105	Parallel key	1	1	1	1	1	1
1106	Slotted nut	2	2	2	2	2	2
1108	O-ring	1	1	1	1	1	1
1109	Hub cover	1	1	1	1	1	1
1110	Washer	1	1	1	1	1	1
1111	Hexagon head screw	1	1	1	1	1	1

1) Old version. Can be updated to the new version with higher efficiency by ordering the kit for the corresponding new version.

Propeller, AISI 316 (50 Hz)

Pos.	Description/Kit No	AMG.55.50 [2]	AMG.75.58 [2]	AMG.110.68 [2]	AMG.55.73	AMG.75.73	AMG.110.84
		95038472	*95038473*	*95038474*	*95038478*	*95038479*	*95038480*
1103	Propeller 5.5 kW	1	-	-	1	-	-
1103	Propeller 7.5 kW	-	1	-	-	1	-
1103	Propeller 11 kW	-	-	1	-	-	1
1104	Lip seal	2	2	2	2	2	2
1105	Parallel key	1	1	1	1	1	1
1106	Slotted nut	2	2	2	2	2	2
1108	O-ring	1	1	1	1	1	1
1109	Hub cover	1	1	1	1	1	1
1110	Washer	1	1	1	1	1	1
1111	Hexagon head screw	1	1	1	1	1	1

2) Old version. Can be updated to the new version with higher efficiency by ordering the kit for the corresponding new version.

Propeller, AISI 304 (60 Hz)

Pos.	Description	60 Hz SI	AMG.55.46 [3]	AMG.75.51 [3]	AMG.110.60 [3]	AMG.55.60	AMG.75.68	AMG.110.73
		60 Hz US	AMG.75.18 [3]	AMG.100.20 [3]	AMG.150.23 [3]	AMG.75.23	AMG.100.27	AMG.150.29
		Kit No	*95038732*	*95038733*	*95038734*	*95038738*	*95038739*	*95038740*
1103	Propeller 5.5 kW / 7.5 Hp		1	-	-	1	-	-
1103	Propeller 7.5 kW / 10 Hp		-	1	-	-	1	-
1103	Propeller 11 kW / 15 Hp		-	-	1	-	-	1
1104	Lip seal		2	2	2	2	2	2
1105	Parallel key		1	1	1	1	1	1
1106	Slotted nut		2	2	2	2	2	2
1108	O-ring		1	1	1	1	1	1
1109	Hub cover		1	1	1	1	1	1
1110	Washer		1	1	1	1	1	1
1111	Hexagon head screw		1	1	1	1	1	1

3) Old version. Can be updated to the new version with higher efficiency by ordering the kit for the corresponding new version.

Cable

Pos.	Description/Kit No	*95038486*	*95038487*	*95038488*
1001	Cable	10 m / 30 ft	15 m / 50 ft	25 m / 80 ft
1026	Cable joint	6	6	6
1027	Cable joint	4	4	4
1030	Cable shoe	1	1	1

Gear

Pos.	Description/Kit No	Non-Ex version	Ex version
		95065492	*95065495*
1060	Sun wheel	1	1
1061	Retaining ring	3	3
1062	Ring gear	1	1
1063	Planet gear	3	3
1065	Roller	114	114
1066	Washer	3	3
1067	Planet carrier	1	1
1068	Planet pin	3	3
1069	Cover	1	1
1071	O-ring	1	-
1156	Washer	3	3

AMG non-ATEX

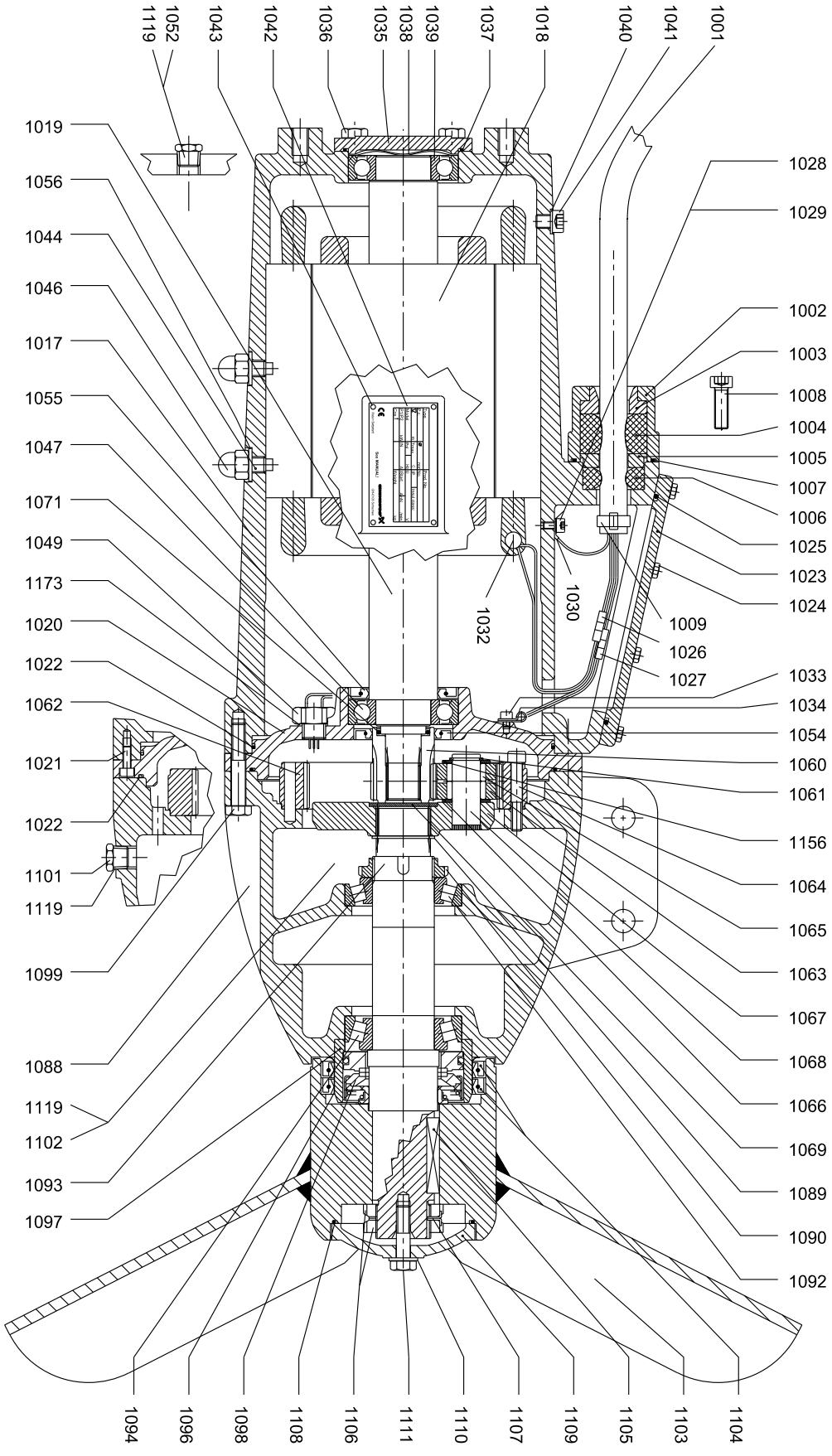
1119
1052
1043
1042
1036
1035
1038
1039
1037
1018
1040
1041
1001
1019
1056
1044
1046
1017
1055
1047
1071
1049
1173
1020
1022
1062
1021
1022
1101
1119
1099
1088
1119
1102
1093
1097
1028
1029
1002
1003
1008
1004
1005
1007
1006
1025
1023
1024
1030
1032
1009
1026
1027
1033
1034
1054
1060
1061
1156
1064
1065
1063
1067
1068
1066
1069
1089
1090
1092
1094
1096
1098
1108
1106
1111
1110
1107
1109
1105
1103
1104
TM035481

AMG.55.xxx.Ex - AMG.110.xxx.Ex (50 Hz only)

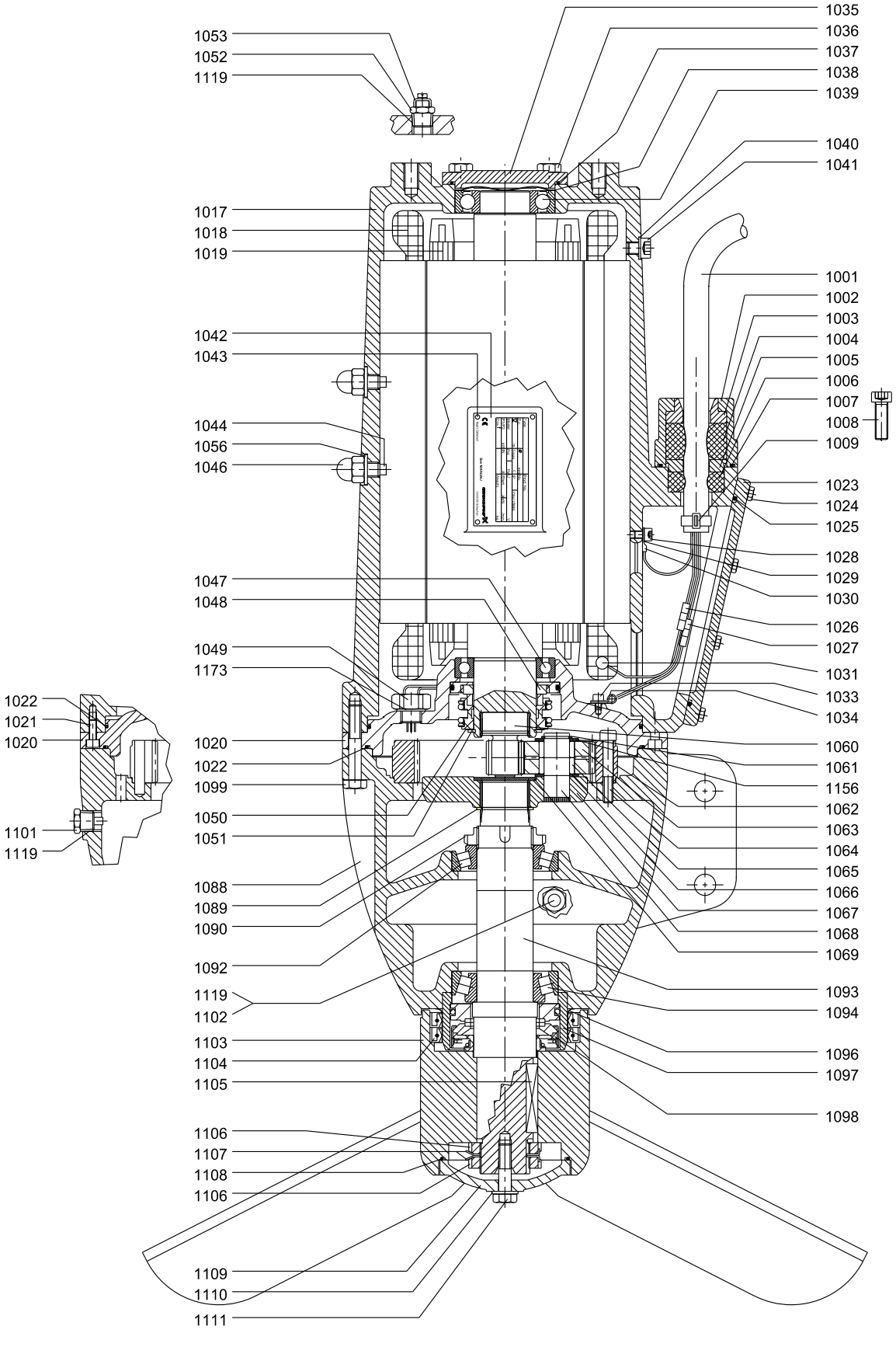

Motor

Pos.	Description		Non-Ex version		Ex version	
		50 Hz	AMG.55.xx AMG.75.xx	AMG.110.xx	AMG.55.xx.Ex AMG.75.xx.Ex	AMG.110.xx.Ex
		60 Hz SI	AMG.55.xx AMG.75.xx	AMG.110.xx	-	-
		60 Hz US	AMG.75.xx AMG.100.xx	AMG.150.xx	-	-
		Kit No	*95038482*	*95038483*	*95038484*	*95038485*
1002	Cable flange		1	1	1	1
1007	O-ring		1	1	1	1
1008	Hexagon socket head cap screw		2	2	2	2
1017	Motor housing		1	1	1	1
1018	Stator 4-pole 7.5 kW / 10 Hp		1	-	-	-
	Stator 4-pole 9.0 kW Ex		-	-	1	-
	Stator 4-pole 11.0 kW / 15 Hp		-	1	-	-
	Stator 4-pole 14.0 kW Ex		-	-	-	1
1019	Rotor with shaft 4-pole 7.5 kW / 10 Hp		1	-	-	-
	Rotor with shaft 4-pole 9.0 kW Ex		-	-	1	-
	Rotor with shaft 4-pole 11.0 kW / 15 Hp		-	1	-	-
	Rotor with shaft 4-pole 14.0 kW Ex		-	-	-	1
1020	Motor flange		1	1	1	1
1021	Hexagon socket head cap screw		3	3	3	3
1022	O-ring		2	2	2	2
1023	Terminal box cover		1	1	1	1
1024	Hexagon head screw		8	8	8	8
1025	O-ring		1	1	1	1
1028	Hexagon socket head cap screw		1	1	1	1
1029	Lock washer		1	1	1	1
1033	Hexagon socket head cap screw		1	1	1	1
1034	Cable clamp		1	1	1	1
1035	Bearing cover		1	1	1	1
1036	Hexagon head screw		4	4	4	4
1037	O-ring		1	1	1	1
1038	Compensation disc		1	1	1	1
1039	Ball bearing		1	1	-	-
	Ball bearing		-	-	1	1
1040	Washer		1	1	1	1
1041	Hexagon socket head cap screw		1	1	1	1
1044	Set screw		2	2	2	2
1046	Nut		2	2	2	2
1047	Ball bearing		1	1	-	-
	Ball bearing		-	-	1	1
1048	Mechanical shaft seal		-	-	1	1
1049	Water-in-oil sensor		1	1	1	1
1050	Shim		-	-	1	1
1051	Retaining ring		-	-	1	1
1052	Plug		1	1	1	1
1053	Connection for protective earthing		-	-	1	1
1054	Lip seal		1	1	-	-
1055	Lip seal		1	1	-	-
1056	Seal washer		2	2	2	2
1119	PTFE tape		1	1	1	1
1173	Seal washer		1	1	1	1

Propeller, AISI 316 (60 Hz)

Pos.	Description	60 Hz SI	AMG.55.46 [1]	AMG.75.51 [1]	AMG.110.60 [1]	AMG.55.60	AMG.75.68	AMG.110.73
		60 Hz US	AMG.75.18 [1]	AMG.100.20 [1]	AMG.150.23 [1]	AMG.75.23	AMG.100.27	AMG.150.29
		Kit No	*95038735*	*95038736*	*95038737*	*95038741*	*95038742*	*95038743*
1103	Propeller 5.5 kW / 7.5 Hp		1	-	-	1	-	-
1103	Propeller 7.5 kW / 10 Hp		-	1	-	-	1	-
1103	Propeller 11 kW / 15 Hp		-	-	1	-	-	1
1104	Lip seal		2	2	2	2	2	2
1105	Parallel key		1	1	1	1	1	1
1106	Slotted nut		2	2	2	2	2	2
1108	O-ring		1	1	1	1	1	1
1109	Hub cover		1	1	1	1	1	1
1110	Washer		1	1	1	1	1	1
1111	Hexagon head screw		1	1	1	1	1	1

1) Old version. Can be updated to the new version with higher efficiency by ordering the kit for the corresponding new version.

AMG non-ATEX

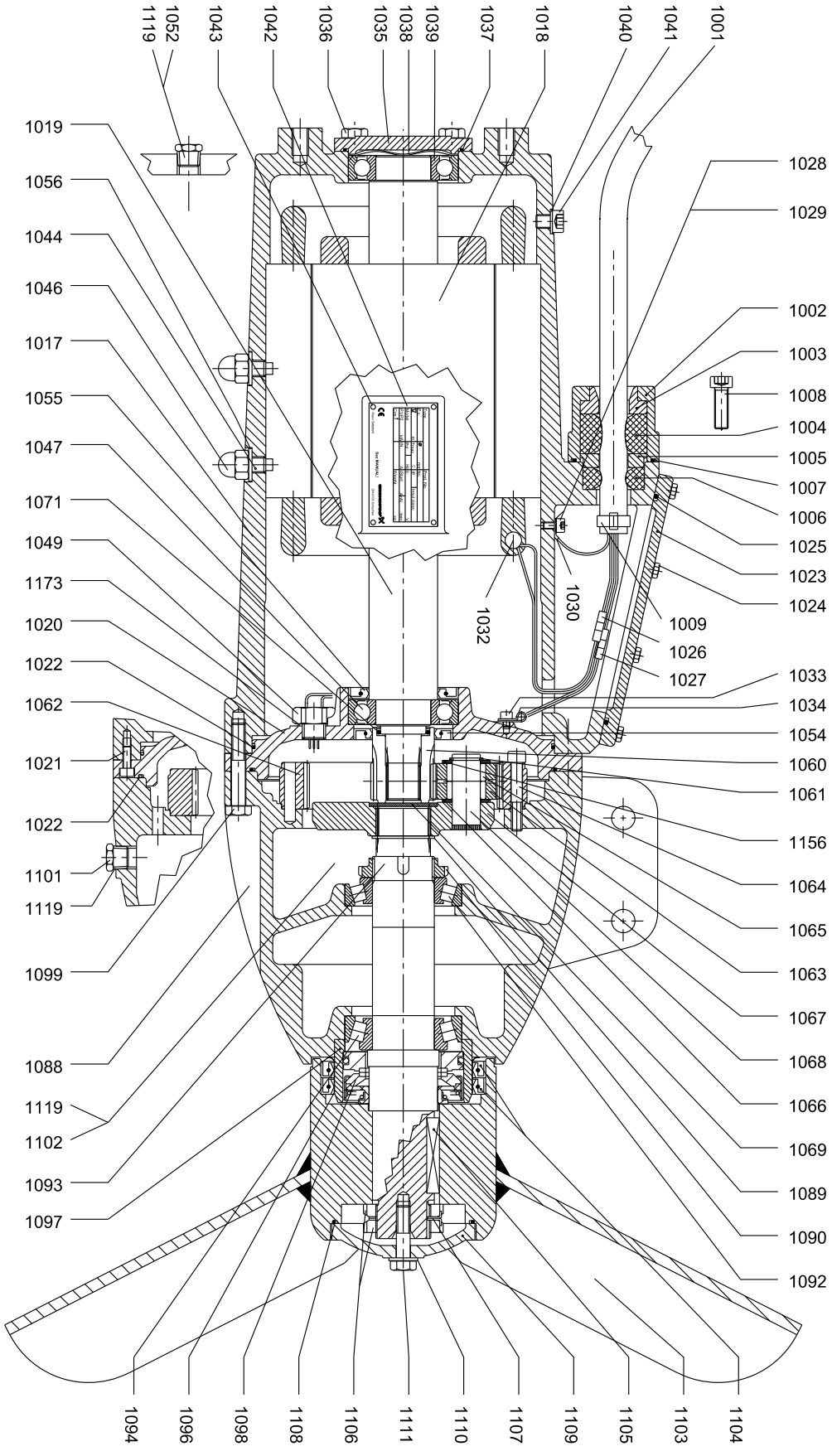
1119
1052
1043
1042
1036
1035
1038
1039
1037
1018
1040
1041
1001
1019
1056
1044
1046
1017
1055
1047
1071
1049
1173
1020
1022
1062
1021
1022
1101
1119
1099
1088
1119
1102
1093
1097
1028
1029
1002
1003
1008
1004
1005
1007
1006
1025
1023
1024
1030
1032
1009
1026
1027
1033
1034
1054
1060
1061
1156
1064
1065
1063
1067
1068
1066
1069
1089
1090
1092
1094
1096
1098
1108
1106
1111
1110
1107
1109
1105
1103
1104
TM035481

AMG.55.xxx.Ex - AMG.110.xxx.Ex (50 Hz only)

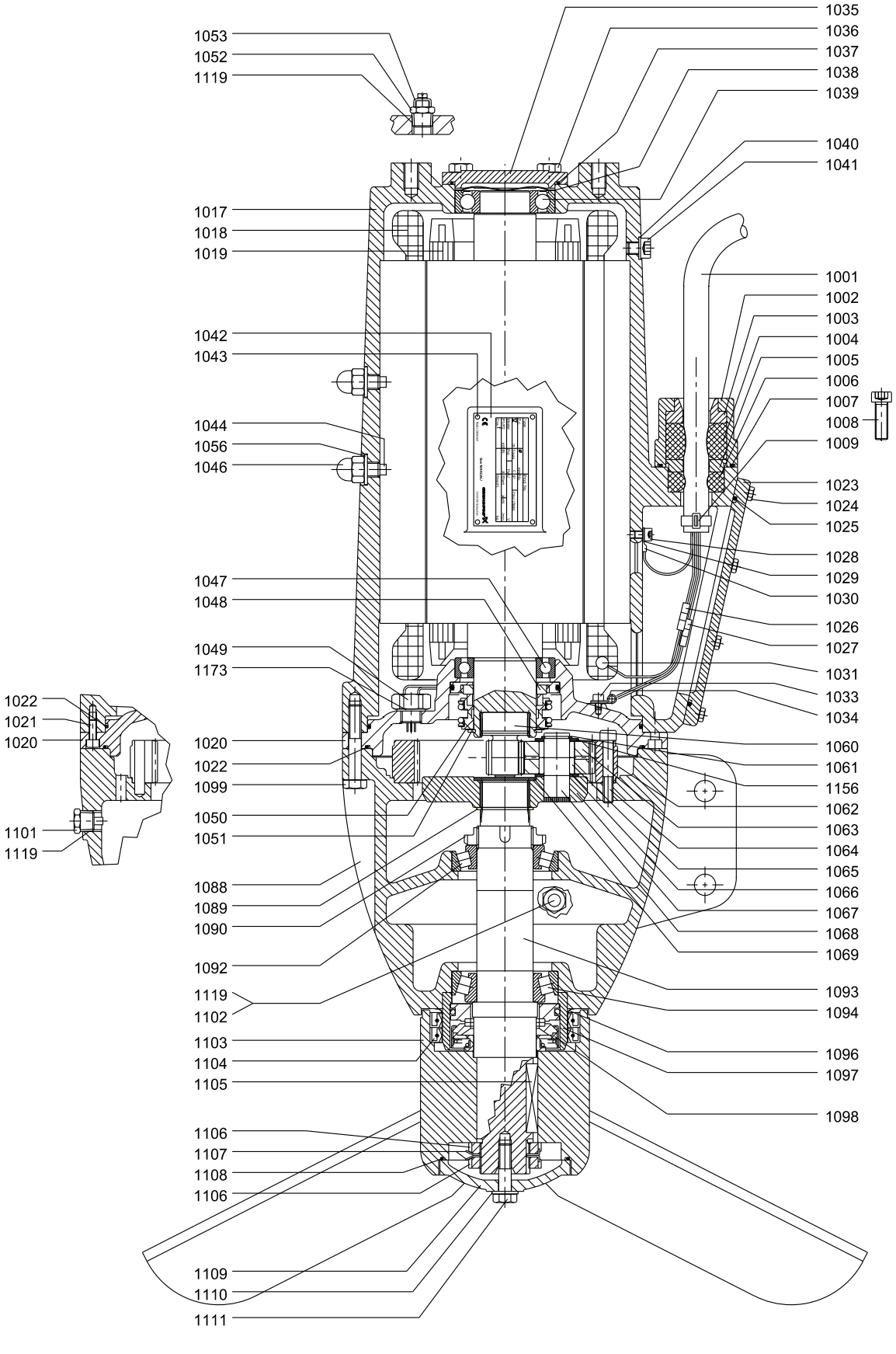

AMG.150-185 (50/60 Hz) and AMG.200-250 (60 Hz North America)

Bearing, motor

Pos.	Description/Kit No	95065474
1038	Compensation disc	1
1039	Ball bearing 6210 2RS	1
1047	Ball bearing 6210 2RS	1

Bearing, gearbox

Pos.	Description/Kit No	95065475
1090	Slotted nut	1
1091	Lock washer	1
1092	Tapered roller bearing 30212	1
1094	Tapered roller bearing 33212	1

Cable

Pos.	Description/Kit No	95038520	95038521	95038522
1001	Cable	10 m / 30 ft	15 m / 50 ft	25 m / 80 ft
1026	Cable joint	6	6	6
1027	Cable joint	4	4	4
1030	Cable shoe	1	1	1

Cable entry, 4 mm^2

Pos.	Description/Kit No		95065473
1003	Cable guide		1
1004	cable seal, large		1
1005	Thrust washer		1
1006	cable seal, small		1
1007	O-ring	54.0 x 3.0	1
1008	Hexagon socket head cap screw		2
1009	Cable relief		1
1025	O-ring	139.29 x 3.53	1
1026	Cable joint		6
1027	Cable joint		4
1030	Cable shoe		1
-	Shrink tube for connections		6
-	Shrink tube for connections		4

Gasket kit

Pos.	Description/Kit No		95065471
1004	cable seal, large		1
1006	cable seal, small		1
1007	O-ring	54.0 x 3.0	1
1022	O-ring	253.59 x 3.53	2
1025	O-ring	139.29 x 3.53	1
1037	O-ring	91.67 x 3.53	1
1054	Lip seal	80 x 55 x 10	1
1055	Lip seal	90 x 58 x 10	1
1071	O-ring	37.77 x 2.62	1
1108	O-ring	120.2 x 3.53	1

Gasket kit, Ex version (50 Hz only)

Pos.	Description/Kit No		95065472
1004	cable seal, large		1
1006	cable seal, small		1
1007	O-ring	54.0 x 3.0	1
1022	O-ring	253.59 x 3.53	2
1025	O-ring	139.29 x 3.53	1
1037	O-ring	91.67 x 3.53	1
1048	Mechanical shaft seal		1
1050	Shim		1
1051	Retaining ring		1
1108	O-ring	120.2 x 3.53	1

Gear

Pos.	Description/Kit No	Non-Ex version	Ex version
		95065493	95065496
1060	Sun wheel	1	1
1061	Retaining ring	3	3
1062	Ring gear	1	1
1063	Planet gear	3	3
1065	Roller	108	108
1066	Washer	3	3
1067	Planet carrier	1	1
1068	Planet pin	3	3
1069	Cover	1	1
1071	O-ring	1	-
1156	Washer	3	3

Gear housing

Pos.	Description/Kit No	95038516
1088	Gear housing	1
1090	Slotted nut	1
1091	Lock washer	1
1092	Tapered roller bearing	1
1093	Gear shaft	1
1094	Tapered roller bearing	1
1101	Drain plug with magnet	1
1102	Plug	2
1119	PTFE tape	1

Radial seal

Pos.	Description/Kit No		95039132
1104	Lip seal		2
1108	O-ring	120.2 x 3.53	1
	O-ring	225.0 x 3.0	1
	O-ring	94.92 x 2.62	1
1110	Washer	∅13 / 24 x 1.5	1

Shaft seal

Pos.	Description/Kit No	95065478
1095	Intermediate ring	1
1098	Mechanical shaft seal	1

Slotted nut

Pos.	Description/Kit No	*95038523*
1106	Slotted nut	2
1107	Lock washer	2

Water-in-oil sensor

Pos.	Description/Kit No	*95038409*
1049	Water-in-oil sensor	1
1173	Seal washer	1

Wear ring

Pos.	Description/Kit No		Standard
			95037376
1097	Wear ring ceramic		1
1104	Lip seal		2
1108	O-ring	120.2 x 3.53	1
	O-ring	225.0 x 3.0	1
	O-ring	94.92 x 2.62	1

AMG non-ATEX

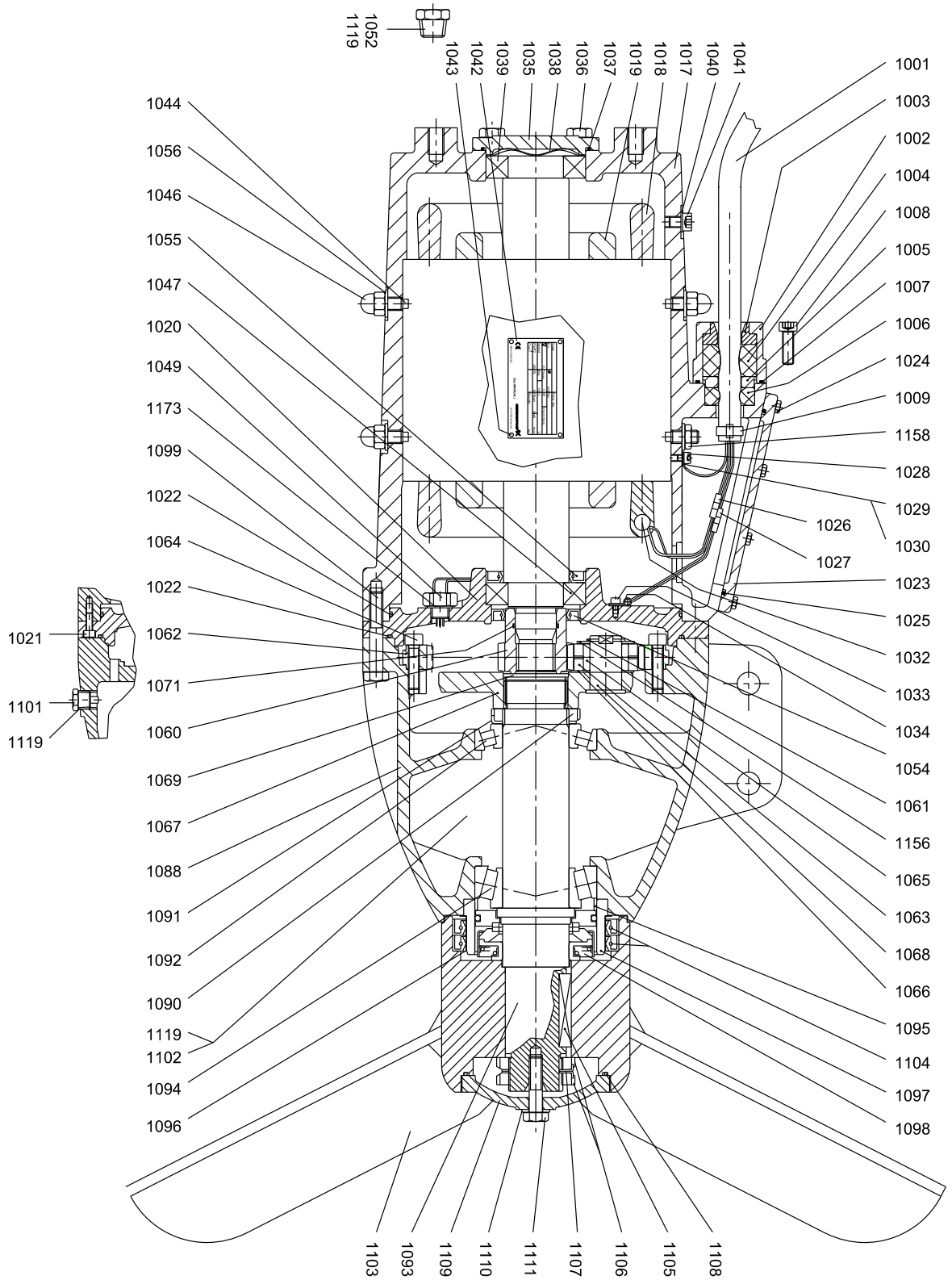

TM035484

AMG.150.xx.Ex - AMG.185.xx.Ex (50 Hz only)

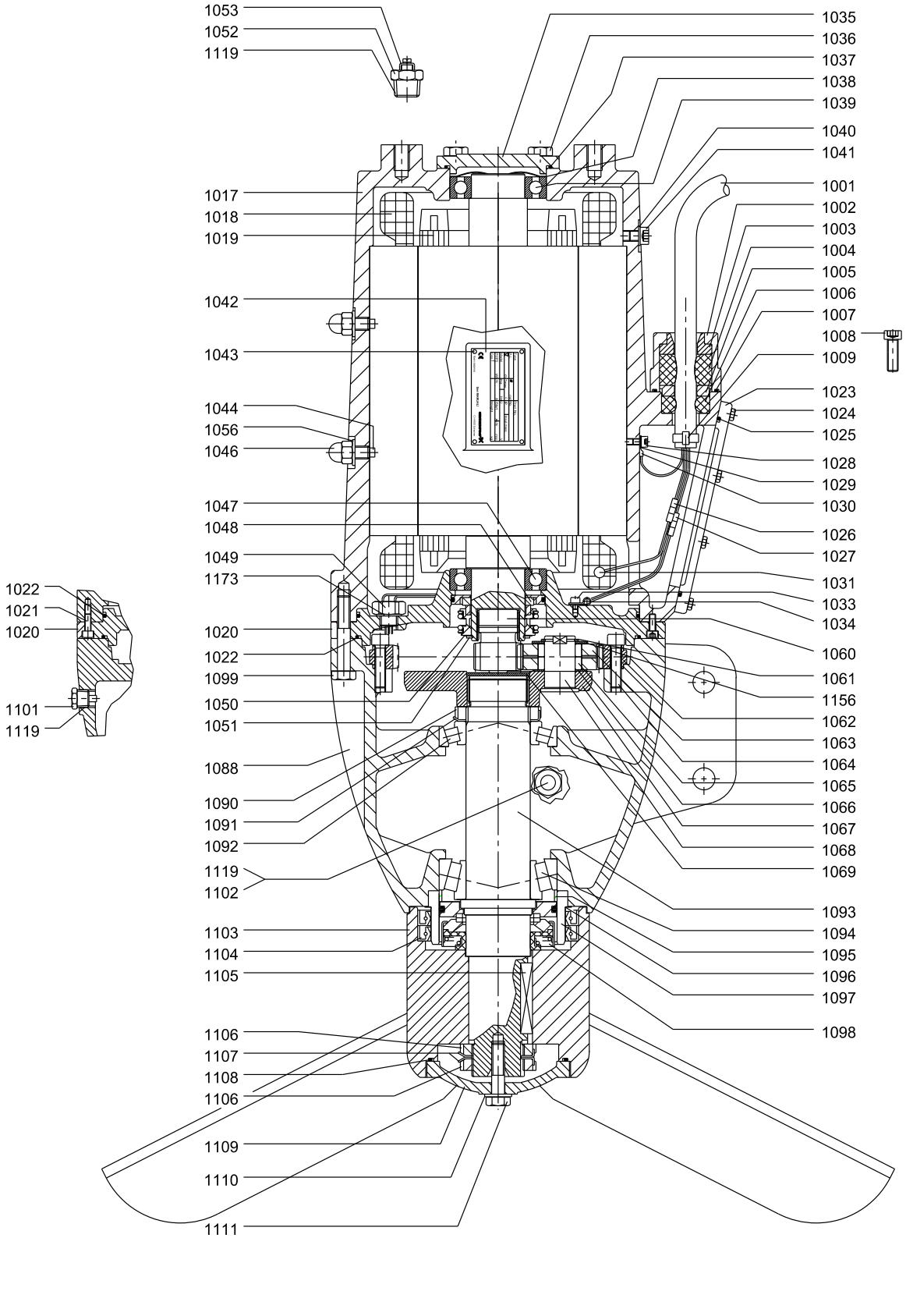

TM035496

Propeller, AISI 304 (50 Hz)

Pos.	Description/Kit No	AMG.150.73 [1]	AMG.185.78 [1]	AMG.150.90	AMG.185.91
		95038508	*95038509*	*95038512*	*95038513*
1103	Propeller 15.0 kW	1	-	1	-
	Propeller 18.5 kW	-	1	-	1
1104	Lip seal	2	2	2	2
1105	Parallel key	1	1	1	1
1106	Slotted nut	2	2	2	2
1108	O-ring	1	1	1	1
1109	Hub cover	1	1	1	1
1110	Washer	1	1	1	1
1111	Hexagon head screw	1	1	1	1

1) Old version. Can be updated to the new version with higher efficiency by ordering the kit for the corresponding new version.

Propeller, AISI 316 (50 Hz)

Pos.	Description/Kit No	AMG.150.73 [2]	AMG.185.78 [2]	AMG.150.90	AMG.185.91
		95038510	*95038511*	*95038514*	*95038515*
1103	Propeller 15.0 kW	1	-	1	-
	Propeller 18.5 kW	-	1	-	1
1104	Lip seal	2	2	2	2
1105	Parallel key	1	1	1	1
1106	Slotted nut	2	2	2	2
1108	O-ring	1	1	1	1
1109	Hub cover	1	1	1	1
1110	Washer	1	1	1	1
1111	Hexagon head screw	1	1	1	1

2) Old version. Can be updated to the new version with higher efficiency by ordering the kit for the corresponding new version.

Propeller, AISI 304 (60 Hz)

Pos.	Description	60 Hz SI 60 Hz US Kit No	AMG.150.75 AMG.200.30 *95038744*	AMG.185.75 AMG.250.30 *95038745*
1103	Propeller 15.0 kW		1	-
	Propeller 18.5 kW		-	1
1104	Lip seal		2	2
1105	Parallel key		1	1
1106	Slotted nut		2	2
1108	O-ring		1	1
1109	Hub cover		1	1
1110	Washer		1	1
1111	Hexagon head screw		1	1

Propeller, AISI 316 (60 Hz)

Pos.	Description	60 Hz SI 60 Hz US Kit No	AMG.150.75 AMG.200.30 *95038746*	AMG.185.75 AMG.250.30 *95038747*
1103	Propeller 15.0 kW		1	-
	Propeller 18.5 kW		-	1
1104	Lip seal		2	2
1105	Parallel key		1	1
1106	Slotted nut		2	2
1108	O-ring		1	1
1109	Hub cover		1	1
1110	Washer		1	1
1111	Hexagon head screw		1	1

AMG non-ATEX

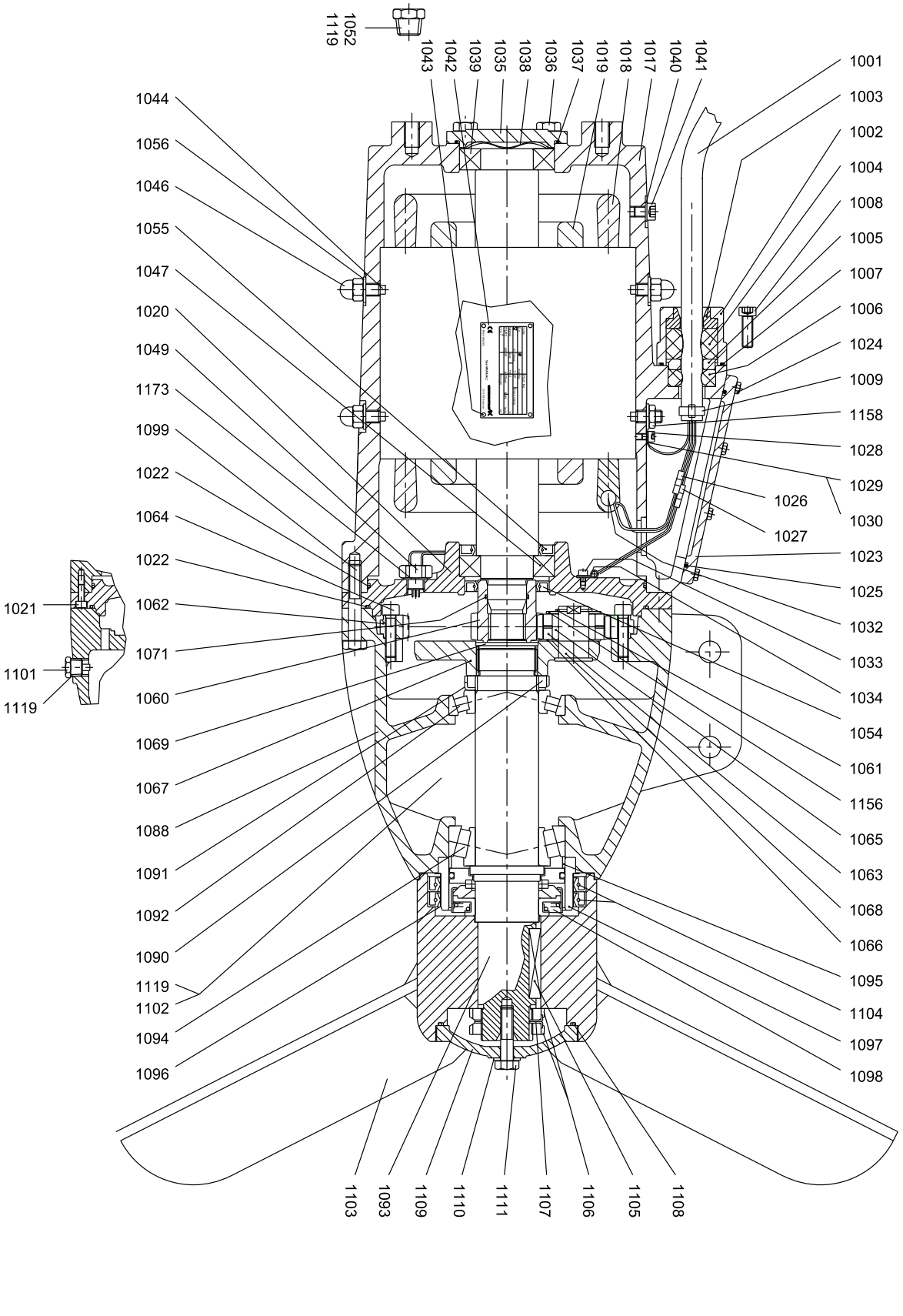
1052
1119
1043
1042
1039
1035
1038
1036
1037
1019
1018
1017
1040
1041
1001
1003
1002
1004
1008
1005
1007
1006
1024
1009
1158
1028
1029
1030
1026
1027
1023
1025
1032
1033
1034
1054
1061
1156
1065
1063
1068
1066
1095
1104
1097
1098
1044
1056
1046
1055
1047
1020
1049
1173
1099
1022
1064
1022
1062
1071
1060
1069
1067
1088
1091
1092
1090
1119
1102
1094
1096
1021
1101
1119
1103
1093
1109
1110
1111
1107
1106
1105
1108
TM035484

AMG.150.xx.Ex - AMG.185.xx.Ex (50 Hz only)

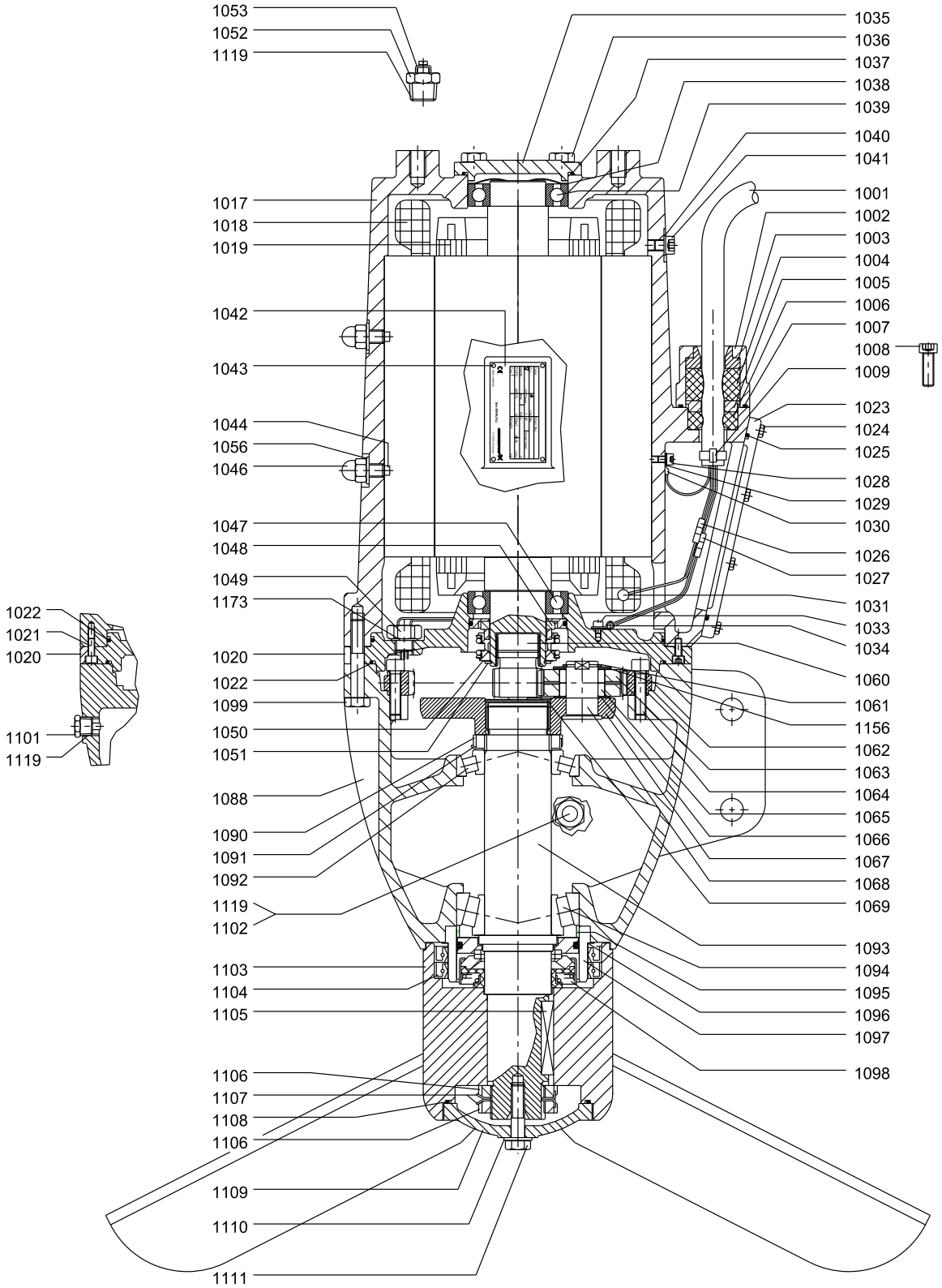

TM035496

Motor

Pos.	Description		Non-Ex version	Ex version	
		50 Hz	AMG.150.xx AMG.185.xx	AMG.150.xx.Ex	AMG.xx.185.Ex
		60 Hz SI	AMG.150.xx AMG.185.xx	-	-
		60 Hz US	AMG.200.xx AMG.250.xx	-	-
		Kit No	*95038517*	*95038518*	*95038519*
1002	Cable flange		1	1	1
1007	O-ring		1	1	1
1008	Hexagon socket head cap screw		2	2	2
1017	Motor housing		1	1	1
1018	Stator 4-pole 18.5 kW / 25 Hp		1	-	-
	Stator 4-pole 18.0 kW Ex		-	1	-
	Stator 4-pole 22.0 kW Ex		-	-	1
1019	Rotor with shaft 4-pole 18.5 kW / 25 Hp		1	-	-
	Rotor with shaft 4-pole 18.0 kW Ex		-	1	-
	Rotor with shaft 4-pole 24.0 kW Ex		-	-	1
1020	Motor flange		1	1	1
1021	Hexagon socket head cap screw		6	6	6
1022	O-ring		2	2	2
1023	Terminal box cover		1	1	1
1024	Hexagon head screw		8	8	8
1025	O-ring		1	1	1
1028	Hexagon socket head cap screw		1	1	1
1029	Lock washer		1	1	1
1033	Hexagon socket head cap screw		1	1	1
1034	Cable clamp		1	1	1
1035	Bearing cover		1	1	1
1036	Hexagon head screw		4	4	4
1037	O-ring		1	1	1
1038	Compensation disc		1	1	1
1039	Ball bearing		1	-	-
	Ball bearing		-	1	1
1040	Washer		1	1	1
1041	Hexagon socket head cap screw		1	1	1
1044	Set screw		4	2	2
1046	Nut		3	2	2
1047	Ball bearing		1	-	-
	Ball bearing		-	1	1
1048	Mechanical shaft seal		-	1	1
1049	Water-in-oil sensor		1	1	1
1050	Shim		-	1	1
1051	Retaining ring		-	1	1
1052	Plug		1	1	1
1053	Connection for protective earthing		-	1	1
1054	Lip seal		1	-	-
1055	Lip seal		1	-	-
1056	Seal washer		4	2	2
1119	PTFE tape		1	1	1
1158	Nut		1	-	-
1173	Seal washer		1	1	1

AMG non-ATEX

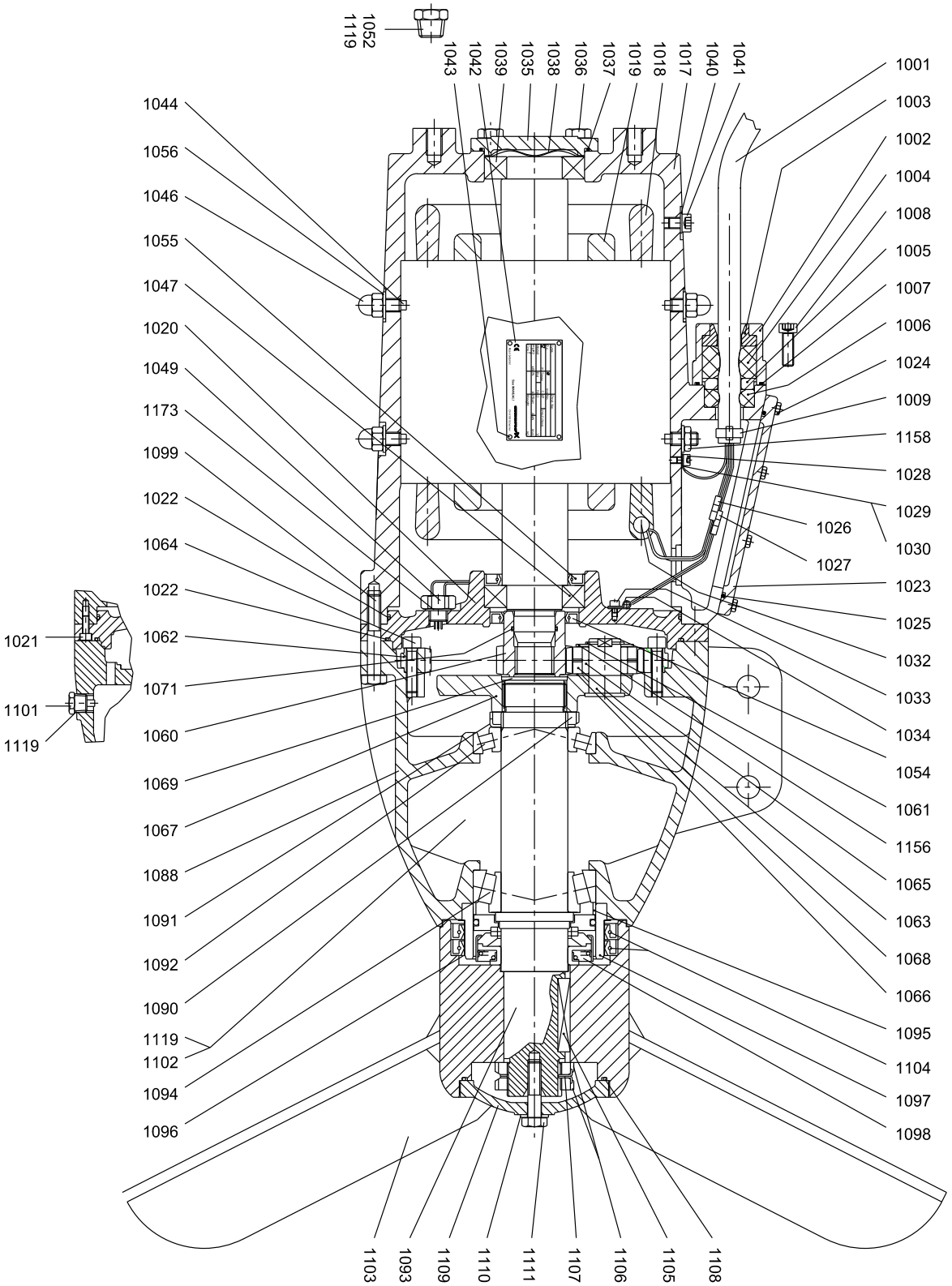

TM035484

AMG.150.xx.Ex - AMG.185.xx.Ex (50 Hz only)

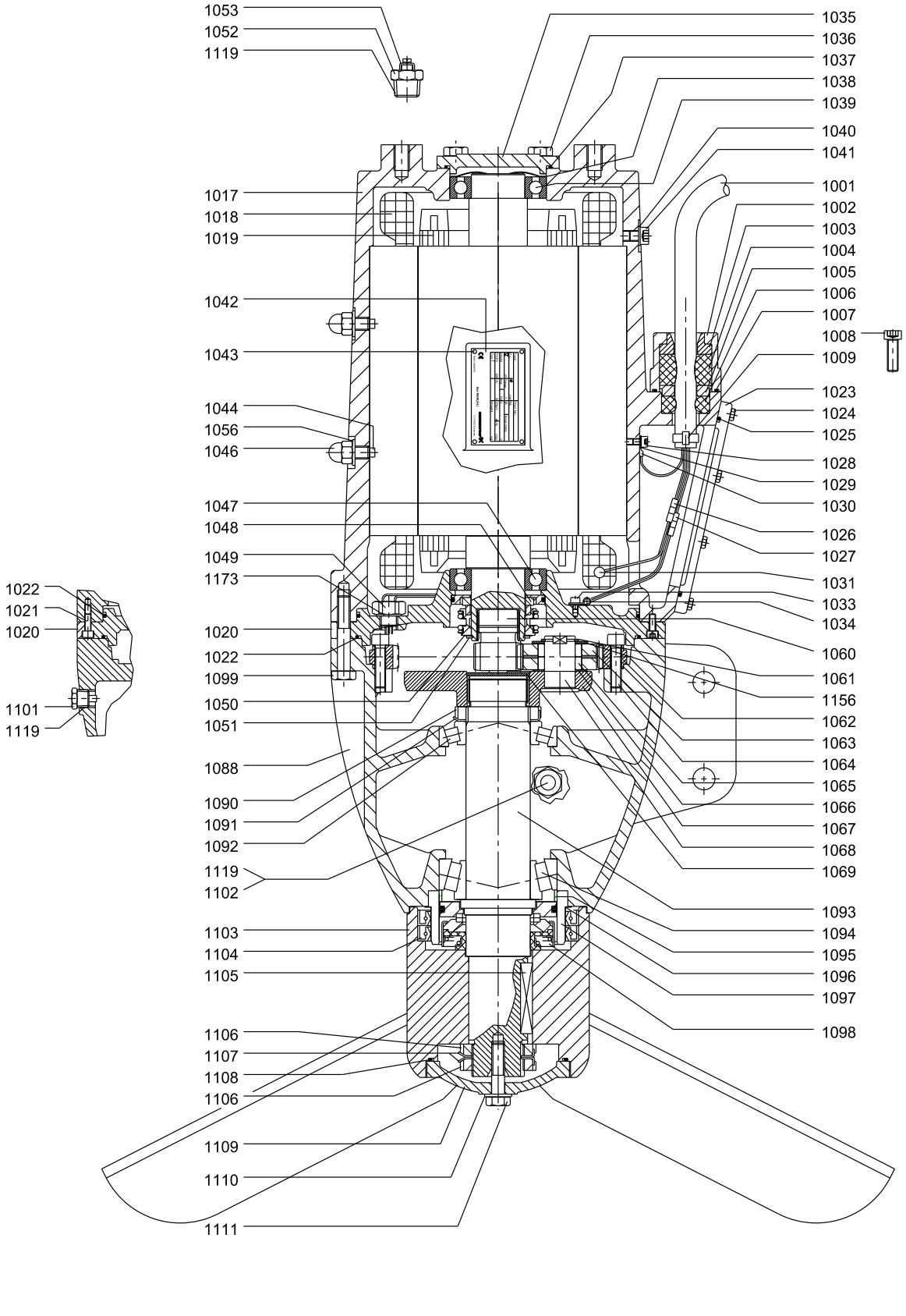

TM035496

AFG

AFG.xx.130.xx (50/60 Hz) and AFG.xx.51.xx (60 Hz North America)

Bearing, motor

Pos.	Description/Kit No		95065458
1038	Compensation disc		1
1039	Ball bearing 6206 2RS		1
1047	Ball bearing 6207 2RS		1

Bearing, gearbox

Pos.	Description/Kit No		95065459
1090	Slotted nut		1
1091	Lock washer		1
1092	Tapered roller bearing 30207		1
1094	Tapered roller bearing 30207		1

Cable entry, 1.5 mm^2

Pos.	Description/Kit No		95065457
1003	Cable guide		1
1004	cable seal, large		1
1005	Thrust washer		1
1006	cable seal, small		1
1007	O-ring	37.82 x 1.78	1
1008	Hexagon socket head cap screw		2
1009	Cable relief		1
1025	O-ring	113.97 x 2.62	1
1026	Cable joint		6
1027	Cable joint		4
1030	Cable shoe		1
-	Shrink tube for connections		10

Gear housing

Pos.	Description/Kit No		95038404
1088	Gear housing		1
1090	Slotted nut		1
1091	Lock washer		1
1092	Tapered roller bearing		1
1093	Gear shaft		1
1094	Tapered roller bearing		1
1101	Drain plug with magnet		1
1102	Plug		2
1119	PTFE tape		1
1164	Retaining ring		1

Gasket kit

Pos.	Description/Kit No		95065479
1004	cable seal, large		1
1006	cable seal, small		1
1007	O-ring	37.82 x 1.78	1
1022	O-ring	158.42 x 2.62	3
1025	O-ring	113.97 x 2.62	1
1037	O-ring	63.22 x 1.78	1
1054	Lip seal	62 x 32 x 8	1
1055	Lip seal	72 x 40 x 7	1
1071	O-ring	21.95 x 1.78	1
1157	Gasket	96 x 75 x 2	1

Gasket kit, Ex version (50 Hz Only)

Pos.	Description/Kit No		95065480
1004	cable seal, large		1
1006	cable seal, small		1
1007	O-ring	37.82 x 1.78	1
1022	O-ring	158.42 x 2.62	3
1025	O-ring	113.97 x 2.62	1
1037	O-ring	56.82 x 2.62	1
1048	Mechanical shaft seal		1
1050	Shim		1
1051	Retaining ring		1
1157	Gasket	96 x 75 x 2	1

Radial seal

Pos.	Description/Kit No		95039130
1104	Lip seal		2
1108	O-ring	85.0 x 2.5	1
	O-ring	105.0 x 3.0	1
	O-ring	184.0 x 3.0	1
1110	Washer	∅8.4 / 16 x 1.6	1
1157	Gasket	96 x 75 x 2	1

Shaft seal

Pos.	Description/Kit No	95065462
1095	Intermediate ring	1
1098	Mechanical shaft seal	1

Slotted nut

Pos.	Description/Kit No	95038413
1106	Slotted nut	2
1107	Lock washer	2

Water-in-oil sensor

Pos.	Description/Kit No	95038409
1049	Water-in-oil sensor	1
1173	Seal washer	1

Wear ring

Pos.	Description/Kit No		Standard 95037374
1097	Wear ring ceramic		1
1104	Lip seal	105 x 85 x 13	2
1108	O-ring	85.0 x 2.5	1
	O-ring	105.0 x 3.0	1
	O-ring	184.0 x 3.0	1
1157	Gasket	96 x 75 x 2	1

AFG non-ATEX

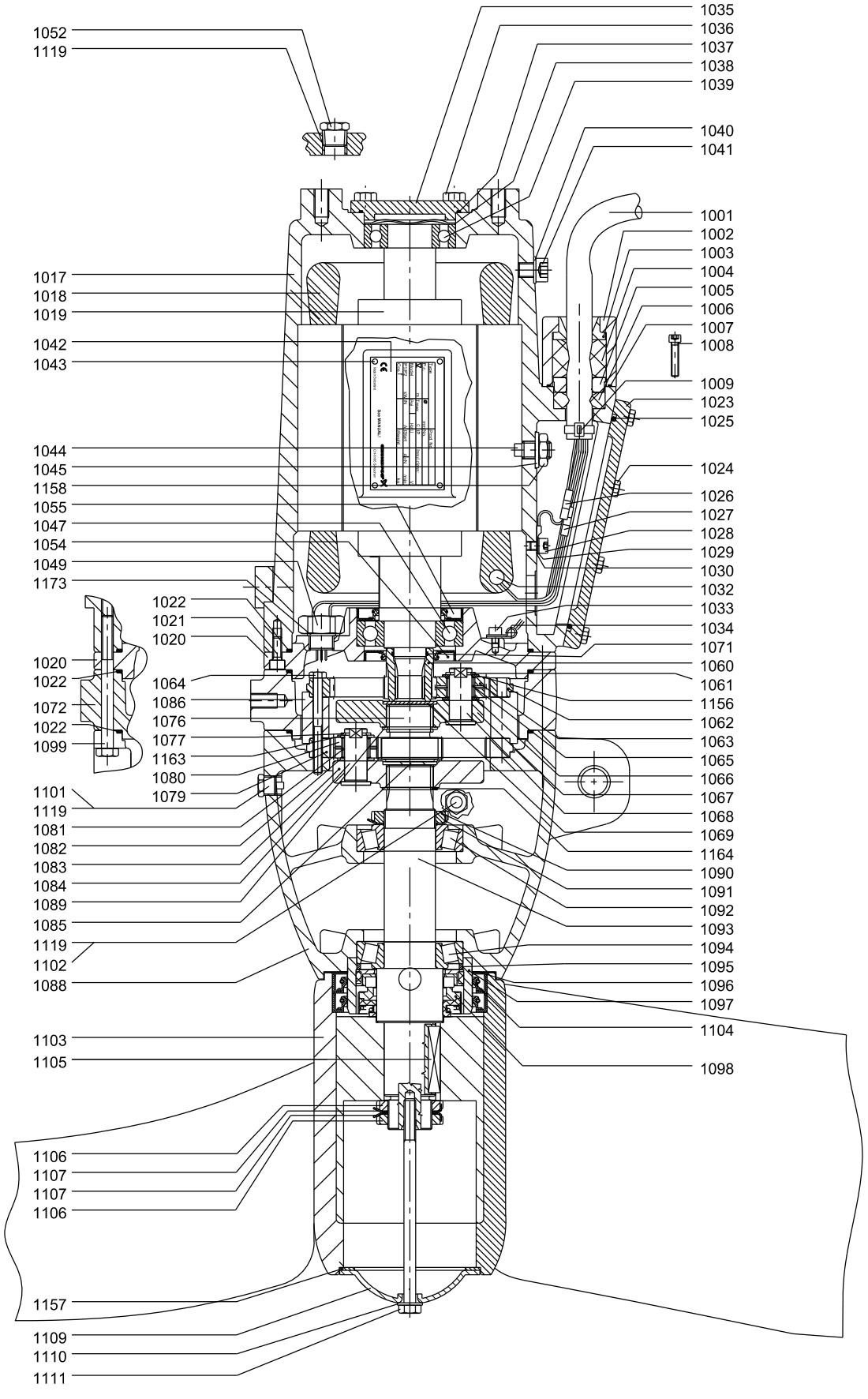
1052
1119
1017
1018
1019
1042
1043
1044
1045
1158
1055
1047
1054
1049
1173
1022
1021
1020
1020
1022
1072
1022
1099
1064
1086
1076
1077
1163
1080
1079
1101
1119
1081
1082
1083
1084
1089
1085
1119
1102
1088
1103
1105
1106
1107
1107
1106
1157
1109
1110
1111
1035
1036
1037
1038
1039
1040
1041
1001
1002
1003
1004
1005
1006
1007
1008
1009
1023
1025
1024
1026
1027
1028
1029
1030
1032
1033
1034
1071
1060
1061
1156
1062
1063
1065
1066
1067
1068
1069
1164
1090
1091
1092
1093
1094
1095
1096
1097
1104
1098
TM035480

AFG.xx.130.xx.Ex (50 Hz only)

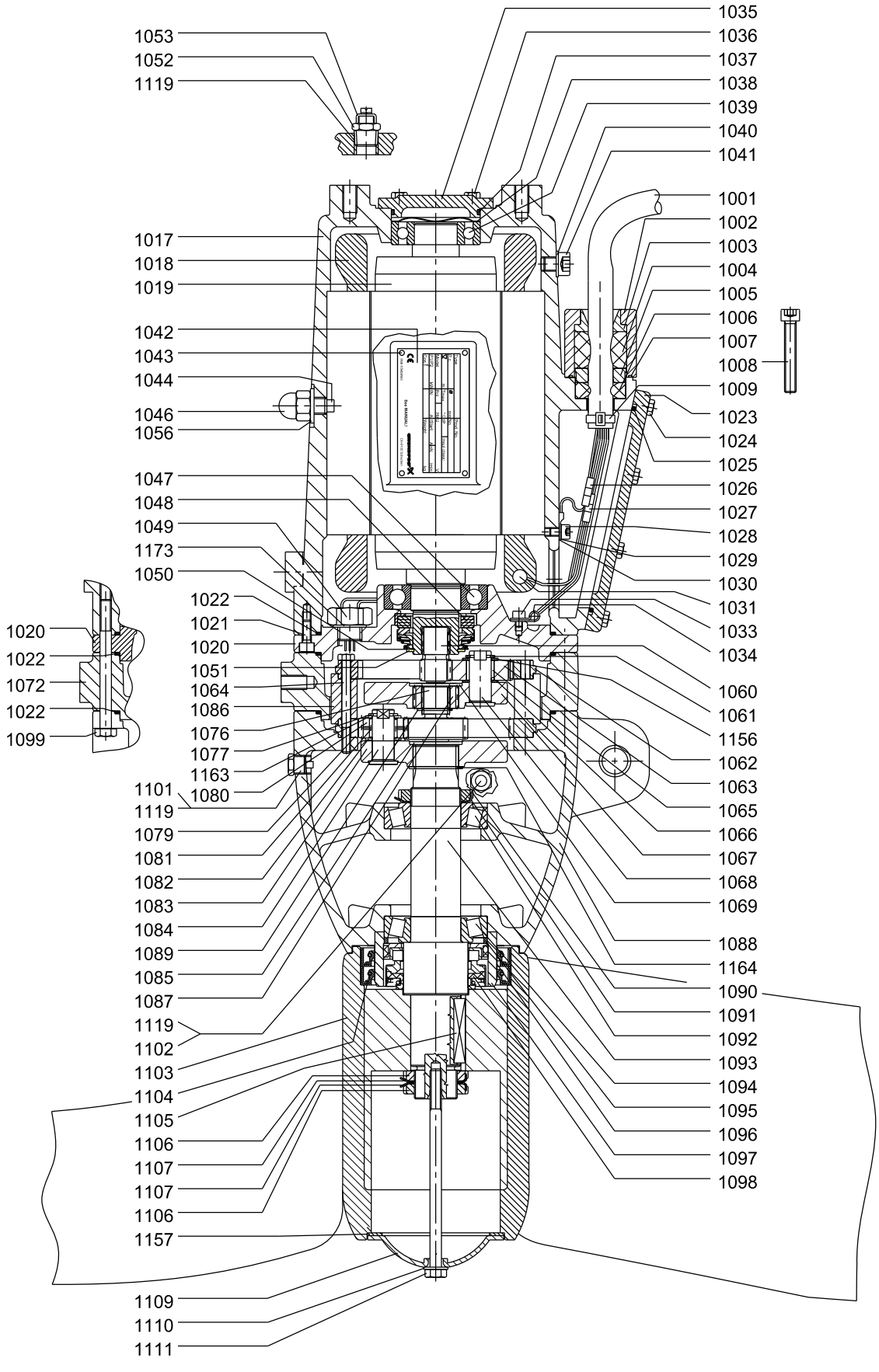

TM035492

Cable

Pos.	Description/Kit No	*95038410*	*95038411*	*95038412*
1001	Cable	10 m / 30 ft	15 m / 50 ft	25 m / 80 ft
1026	Cable joint	6	6	6
1027	Cable joint	4	4	4
1030	Cable shoe	1	1	1

Gear

Pos.	Description		Non-Ex version					Ex version (50 Hz only)		
		50 Hz	**All**	**AFG.11.130**	**AFG.15.130 AFG.22.130**	**AFG.30.130 AFG.40.130**	**AFG.08.130**	**All**	**AFG.15.130 AFG.22.130**	**AFG.30.130 AFG.40.130**
		60 Hz SI			**AFG.30.130 AFG.40.130**	**-**	**AFG.14.130 AFG.18.130**		**-**	
		60 Hz US			**AFG.40.51 AFG.55.51**	**-**	**AFG.19.51 AFG.24.51**		**-**	
			Step 1	**Step 2**	**Step 2**	**Step 2**	**Step 2**	**Step 1**	**Step 2**	**Step 2**
		Kit No	***95065491***	***95038770***	***95038554***	***95038555***	***95038748***	***95065494***	***95038554***	***95038555***
1060	Sun wheel		1	-	-	-	-	1	-	-
1061	Retaining ring		3	-	-	-	-	3	-	-
1062	Ring gear		1	-	-	-	-	1	-	-
1063	Planet gear		3	-	-	-	-	3	-	-
1065	Roller		81	-	-	-	-	81	-	-
1066	Washer		3	-	-	-	-	3	-	-
1067	Planet carrier		1	-	-	-	-	1	-	-
1068	Planet pin		3	-	-	-	-	3	-	-
1069	Cover		1	-	-	-	-	1	-	-
1071	O-ring		1	-	-	-	-	-	-	-
1076	Sun wheel i = 4.83		-	1	-	-	-	-	-	-
	Sun wheel i = 4.28		-	-	1	-	-	-	1	-
	Sun wheel i = 3.55		-	-	-	1	-	-	-	1
	Sun wheel i = 5.6		-	-	-	-	1	-	-	-
1077	Retaining ring A15		-	3	3	3	3	-	3	3
1079	Ring gear Z=69		-	1	1	1	1	-	1	1
1080	Planet gear i = 4.83		-	3	-	-	-	-	-	-
	Planet gear i = 4.28		-	-	3	-	-	-	3	-
	Planet gear i = 3.55		-	-	-	3	-	-	-	3
	Planet gear i = 5.6		-	-	-	-	3	-	-	-
1081	Roller		-	81	81	81	81	-	81	81
1082	Washer		-	3	3	3	3	-	3	3
1083	Planet carrier i= 4.83		-	1	-	-	-	-	-	-
	Planet carrier i = 4.28		-	-	1	-	-	-	1	-
	Planet carrier i = 3.55		-	-	-	1	-	-	-	1
	Planet carrier i=5.6		-	-	-	-	1	-	-	-
1084	Planet pin		-	3	3	3	3	-	3	3
1085	Cover		-	1	1	1	1	-	1	1
1087	Gear coupling		-	1	-	-	1	-	1	1
1089	Retaining ring A32		-	1	1	1	1	-	1	1
1156	Washer		3	-	-	-	-	3	-	-
1163	Washer		-	3	3	3	3	-	3	3

Propeller

Pos.	Description					
		50 Hz	AFG.08.130			
			AFG.11.130			
			AFG.15.130	AFG.22.130	AFG.30.130	AFG.40.130
		60 Hz SI	AFG.14.130	AFG.18.130	AFG.30.130	AFG.40.130
		60 Hz US	AFG.19.51	AFG.24.51	AFG.40.51	AFG.55.51
		Kit No	*95038541*	*95038542*	*95038543*	*95038544*
1103	Propeller		1	1	1	1
1104	Lip seal		2	2	2	2
1105	Parallel key		1	1	1	1
1106	Slotted nut		2	2	2	2
1109	Hub cover		1	1	1	1
1110	Washer		1	1	1	1
1111	Hexagon head screw		1	1	1	1
1157	Gasket		1	1	1	1

AFG non-ATEX

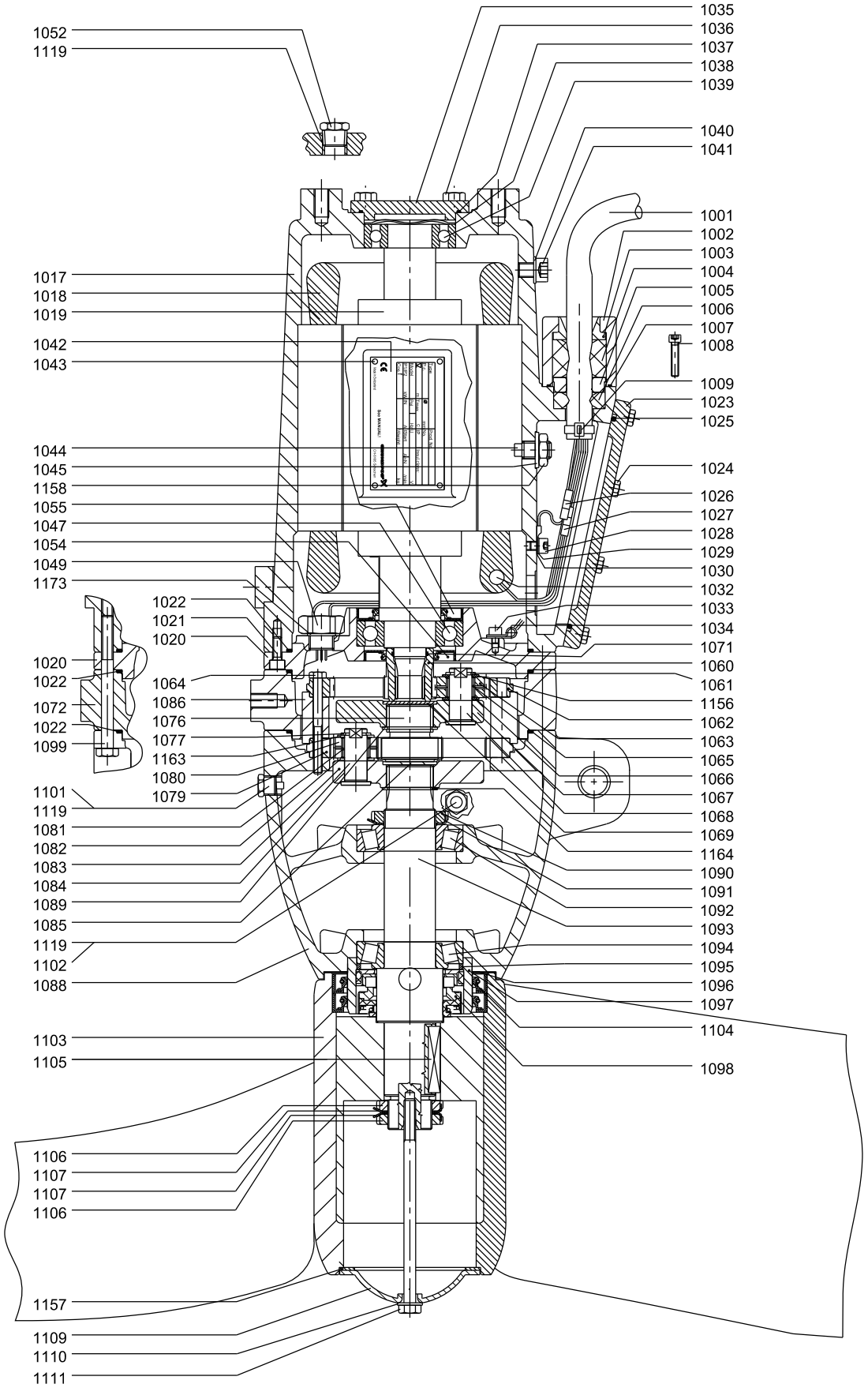
1052
1119
1017
1018
1019
1042
1043
1044
1045
1158
1055
1047
1054
1049
1173
1022
1021
1020
1020
1022
1072
1022
1099
1064
1086
1076
1077
1163
1080
1079
1101
1119
1081
1082
1083
1084
1089
1085
1119
1102
1088
1103
1105
1106
1107
1107
1106
1157
1109
1110
1111
1035
1036
1037
1038
1039
1040
1041
1001
1002
1003
1004
1005
1006
1007
1008
1009
1023
1025
1024
1026
1027
1028
1029
1030
1032
1033
1034
1071
1060
1061
1156
1062
1063
1065
1066
1067
1068
1069
1164
1090
1091
1092
1093
1094
1095
1096
1097
1104
1098
TM035480

AFG.xx.130.xx.Ex (50 Hz only)

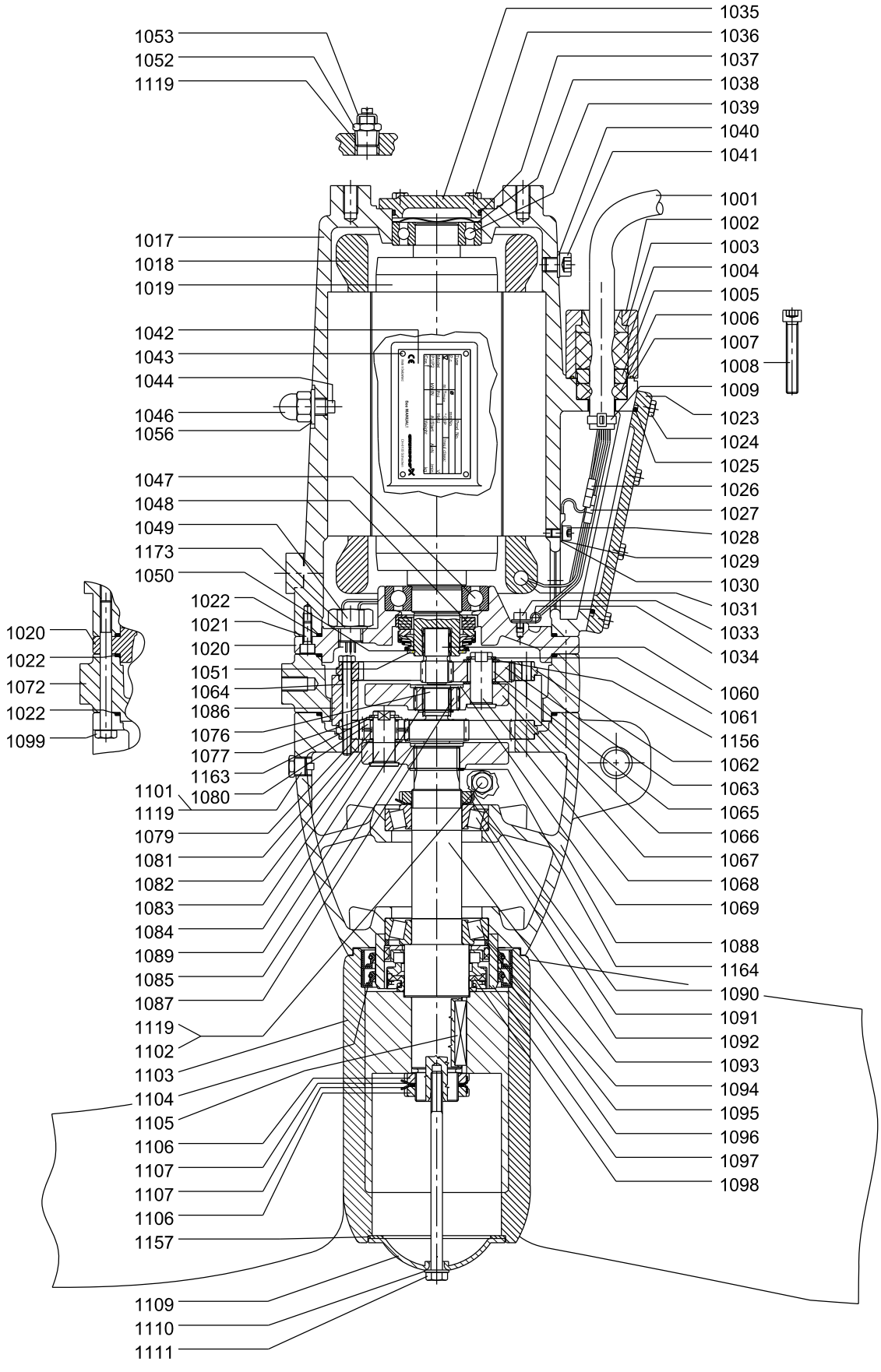

TM035492

Motor

Pos.	Description		Non-Ex version		Ex version (50 Hz only)	
		50 Hz	AFG.08.130 AFG.11.130 AFG.15.130 AFG.22.130	AFG.30.130 AFG.40.130	AFG.15.130 AFG.22.130	AFG.30.130 AFG.40.130
		60 Hz SI	AFG.14.130 AFG.18.130	AFG.30.130 AFG.40.130	-	-
		60 Hz US	AFG.19.51 AFG.24.51	AFG.40.51 AFG.55.51	-	-
		Kit No	*95038405*	*95038406*	*95038407*	*95038408*
1002	Cable flange		1	1	1	1
1007	O-ring		1	1	1	1
1008	Hexagon socket head cap screw		2	2	2	2
1017	Motor housing		1	1	1	1
1018	Stator 4-pole		1	1	1	1
1019	Rotor with shaft 4-pole		1	1	1	1
1020	Motor flange		1	1	1	1
1021	Hexagon socket head cap screw		3	3	3	3
1022	O-ring		2	2	2	2
1023	Terminal box cover		1	1	1	1
1024	Hexagon head screw		8	8	8	8
1025	O-ring		1	1	1	1
1028	Hexagon socket head cap screw		1	1	1	1
1029	Lock washer		1	1	1	1
1033	Hexagon socket head cap screw		1	1	1	1
1034	Cable clamp		1	1	1	1
1035	Bearing cover		1	1	1	1
1036	Hexagon head screw		4	4	4	4
1037	O-ring		1	1	1	1
1038	Compensation disc		1	1	1	1
1039	Ball bearing		1	1	-	-
	Ball bearing		-	-	1	1
1040	Washer		1	1	1	1
1041	Hexagon socket head cap screw		1	1	1	1
1044	Set screw		1	1	1	1
1045	Spring washer		1	1	-	1
1046	Nut		-	-	1	1
1047	Ball bearing		1	1	-	-
	Ball bearing		-	-	1	1
1048	Mechanical shaft seal		-	-	1	1
1049	Water-in-oil sensor		1	1	1	1
1050	Shim		-	-	1	1
1051	Retaining ring		-	-	1	1
1052	Plug		1	1	1	1
1053	Connection for protective earthing		-	-	1	1
1054	Lip seal		1	1	-	-
1055	Lip seal		1	1	-	-
1056	Seal washer		-	-	1	1
1119	PTFE tape		1	1	1	1
1158	Nut		1	1	-	-
1173	Seal washer		1	1	1	1

AFG non-ATEX

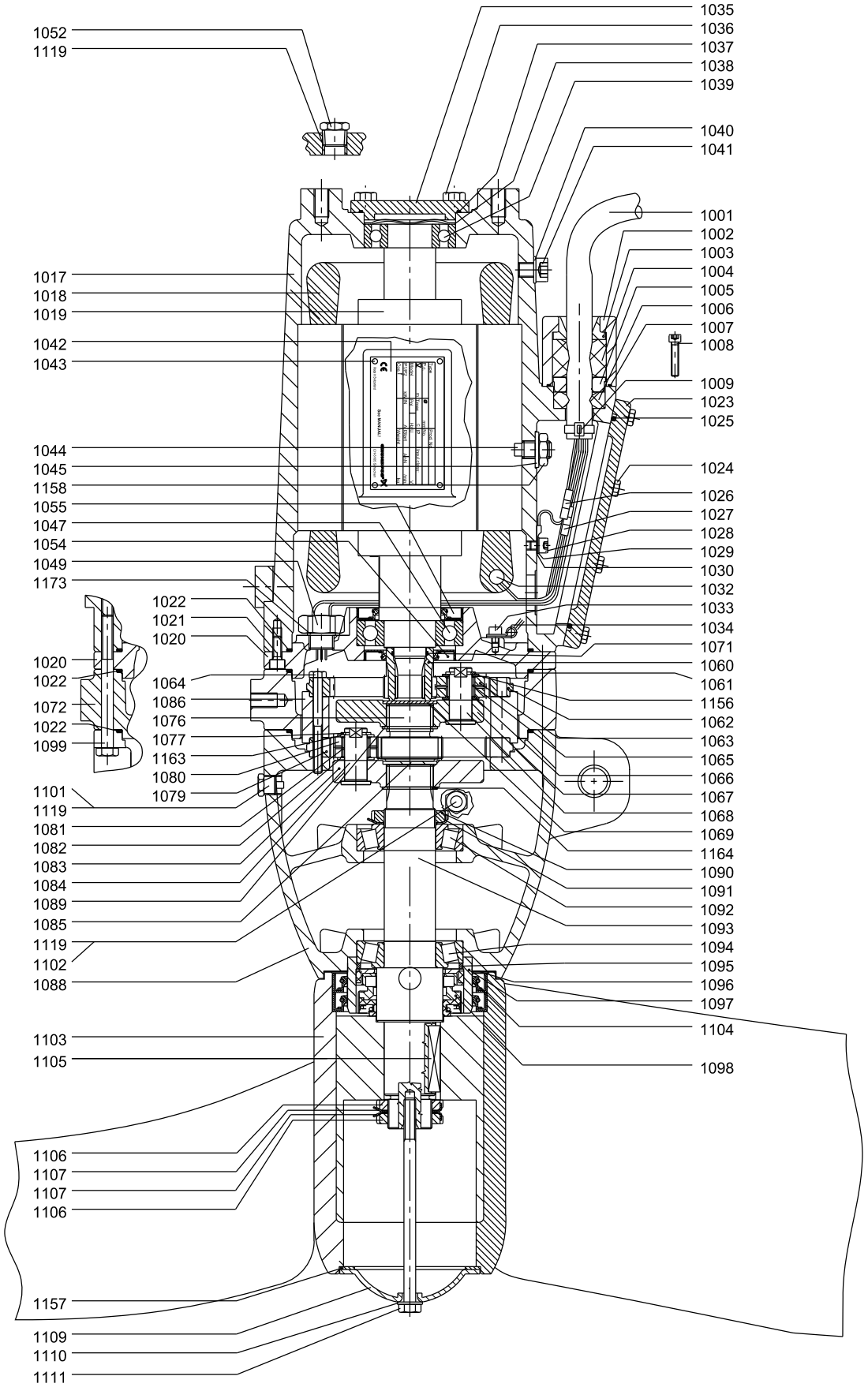
1052
1119
1035
1036
1037
1038
1039
1040
1041
1001
1002
1003
1004
1005
1006
1007
1008
1009
1023
1025
1017
1018
1019
1042
1043
1044
1045
1158
1055
1047
1054
1049
1173
1024
1026
1027
1028
1029
1030
1032
1033
1034
1071
1060
1061
1156
1062
1063
1065
1066
1067
1068
1069
1164
1090
1091
1092
1093
1094
1095
1096
1097
1104
1098
1022
1021
1020
1064
1086
1076
1077
1163
1080
1079
1020
1022
1072
1022
1099
1101
1119
1081
1082
1083
1084
1089
1085
1119
1102
1088
1103
1105
1106
1107
1107
1106
1157
1109
1110
1111
TM035480

AFG.xx.130.xx.Ex (50 Hz only)

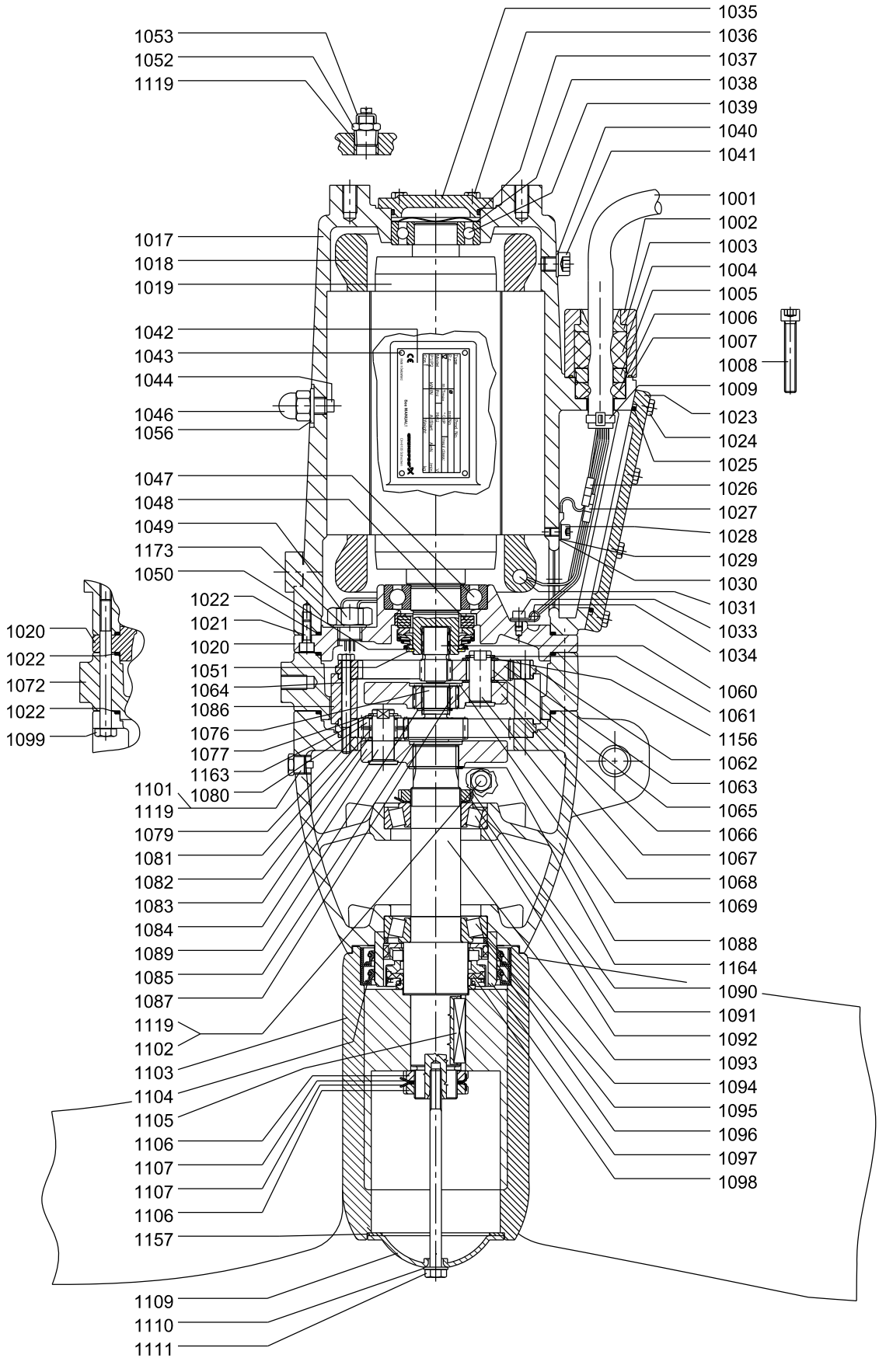

AFG.xx.180.xx (50/60 Hz) and AFG.xx.71.xx (60 Hz North America)

Bearing, motor

Pos.	Description/Kit No		95065458
1038	Compensation disc		1
1039	Ball bearing 6206 2RS		1
1047	Ball bearing 6207 2RS		1

Bearing, gearbox

Pos.	Description/Kit No		95065467
1090	Slotted nut; elastic stop		1
1092	Tapered roller bearing 30209		1
1094	Tapered roller bearing 32209		1

Cable entry, 1.5 mm^2

Pos.	Description/Kit No		95065457
1003	Cable guide		1
1004	cable seal, large		1
1005	Thrust washer		1
1006	cable seal, small		1
1007	O-ring	37.82 x 1.78	1
1008	Hexagon socket head cap screw		2
1009	Cable relief		1
1025	O-ring	113.97 x 2.62	1
1026	Cable joint		6
1027	Cable joint		4
1030	Cable shoe		1
-	Shrink tube for connections		10

Gear housing

Pos.	Description/Kit No		95038481
1088	Gear housing		1
1089	Retaining ring		1
1090	Slotted nut; elastic stop		1
1092	Tapered roller bearing		1
1093	Gear shaft		1
1094	Tapered roller bearing		1
1101	Drain plug with magnet		1
1102	Plug		2
1119	PTFE tape		1

Gasket kit

Pos.	Description/Kit No		95065482
1004	cable seal, large		1
1006	cable seal, small		1
1007	O-ring	37.82 x 1.78	1
1022	O-ring	158.42 x 2.62	2
1025	O-ring	113.97 x 2.62	1
1037	O-ring	63.22 x 1.78	1
1054	Lip seal	62 x 32 x 8	1
1055	Lip seal	72 x 40 x 7	1
1071	O-ring	21.95 x 1.78	1
1073	O-ring	215.57 x 2.62	1
1157	Gasket	96 x 75 x 2	1

Gasket kit, Ex version (50 Hz only)

Pos.	Description/Kit No		95065483
1004	cable seal, large		1
1006	cable seal, small		1
1007	O-ring	37.82 x 1.78	1
1022	O-ring	158.42 x 2.62	2
1025	O-ring	113.97 x 2.62	1
1037	O-ring	56.82 x 2.62	1
1048	Mechanical shaft seal		1
1050	Shim		1
1051	Retaining ring		1
1073	O-ring	215.57 x 2.62	1
1157	Gasket	96 x 75 x 2	1

Radial seal

Pos.	Description/Kit No		95039131
1104	Lip seal	120 x 100 x 12	2
1108	O-ring	94.92 x 2.62	1
	O-ring	184.0 x 3.0	1
	O-ring	225.0 x 3.0	1
1110	Washer	∅10.5 / 20 x 2	1
1157	Gasket	96 x 75 x 2	1

Shaft seal

Pos.	Description/Kit No	95065470
1098	Mechanical shaft seal	1

Slotted nut

Pos.	Description/Kit No	95038489
1106	Slotted nut	2
1107	Lock washer	2

Water-in-oil sensor

Pos.	Description/Kit No	95038409
1049	Water-in-oil sensor	1
1173	Seal washer	1

Wear ring

Pos.	Description/Kit No		Standard
			95037375
1097	Wear ring ceramic		1
1104	Lip seal	120 x 100 x 12	2
1108	O-ring	94.92 x 2.62	1
	O-ring	184.0 x 3.0	1
	O-ring	225.0 x 3.0	1
1157	Gasket	96 x 75 x 2	1

AFG non-ATEX

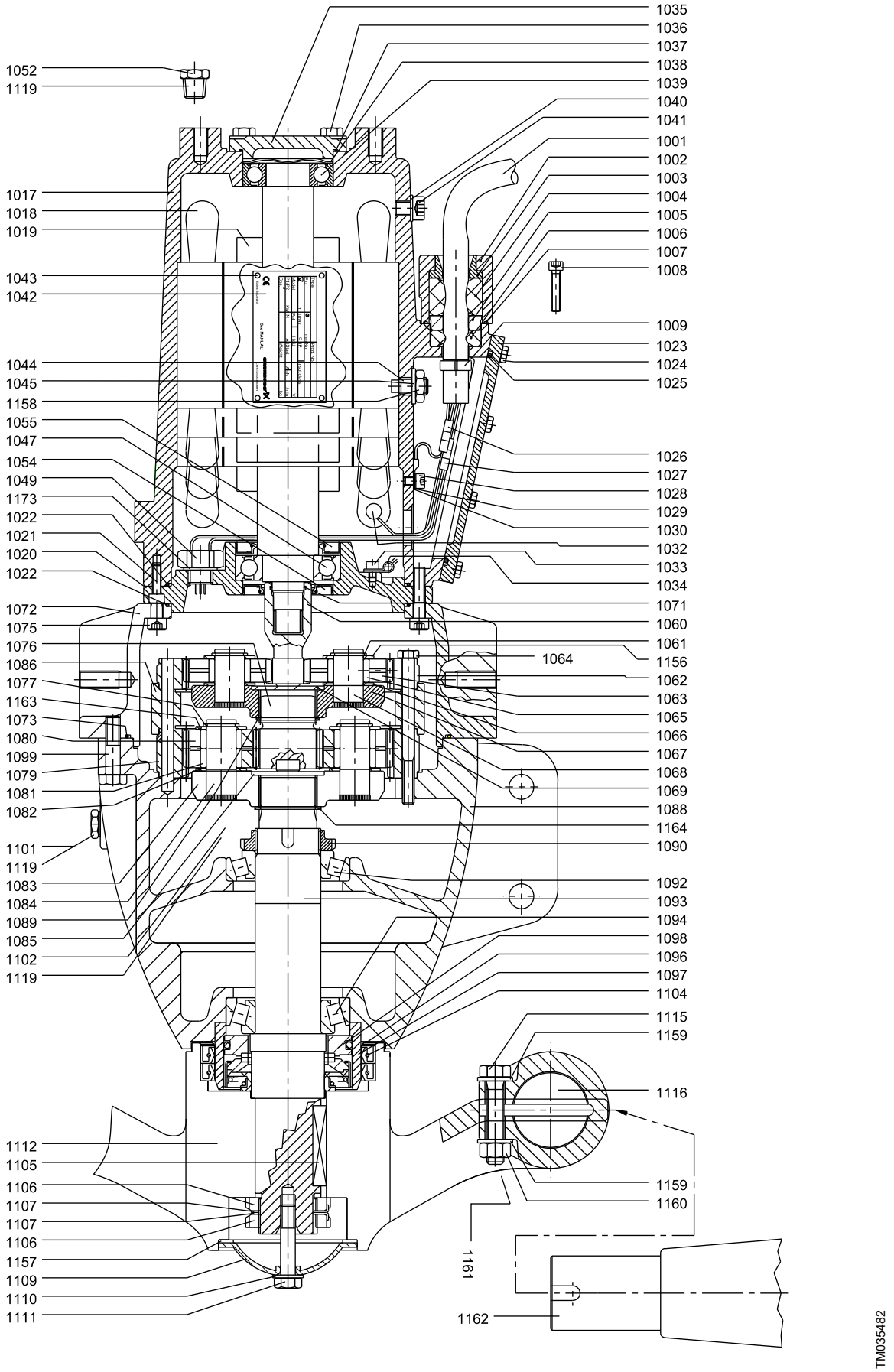
1035
1036
1037
1038
1039
1040
1041
1001
1002
1003
1004
1005
1006
1007
1008
1009
1023
1024
1025
1026
1027
1028
1029
1030
1032
1033
1034
1071
1060
1061
1156
1062
1063
1065
1066
1067
1068
1069
1088
1164
1090
1092
1093
1094
1098
1096
1097
1104
1115
1159
1116
1159
1160
1161
1162
1052
1119
1017
1018
1019
1043
1042
1044
1045
1158
1055
1047
1054
1049
1173
1022
1021
1020
1022
1072
1075
1076
1086
1077
1163
1073
1080
1099
1079
1081
1082
1101
1119
1083
1084
1089
1085
1102
1119
1064
1112
1105
1106
1107
1107
1106
1157
1109
1110
1111
TM035482

AFG.xx.180.xx.Ex (50 Hz only)

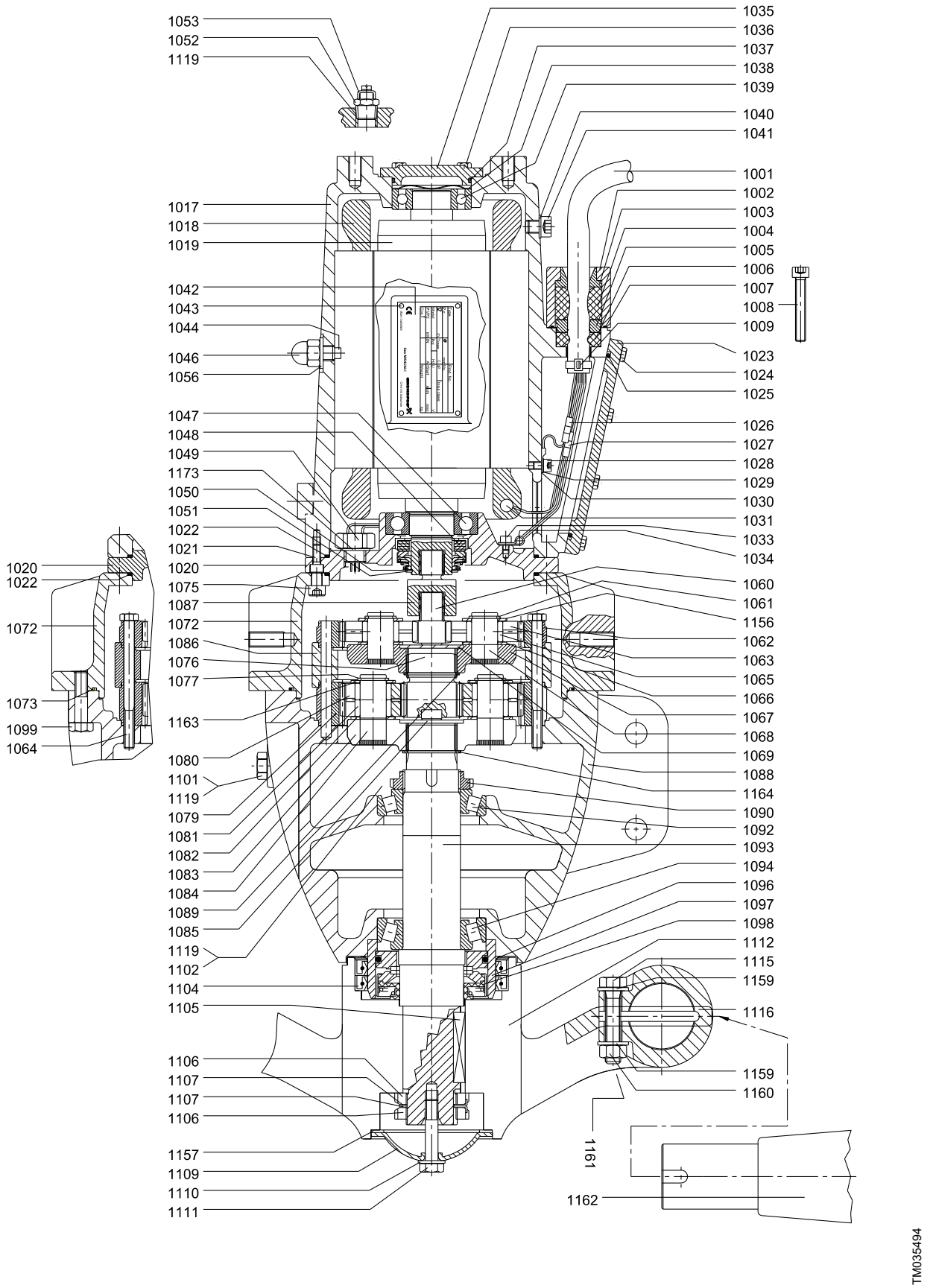

Cable

Pos.	Description/Kit No	*95038410*	*95038411*	*95038412*
1001	Cable	10 m / 30 ft	15 m / 50 ft	25 m / 80 ft
1026	Cable joint	6	6	6
1027	Cable joint	4	4	4
1030	Cable shoe	1	1	1

Gear

Pos.	Description	Step 1		Step 2				
	50 Hz	**All Non-Ex versions**	**All Ex versions**	**AFG.13.180**	**-**	**AFG.18.180**	**AFG.24.180**	**AFG.37.180**
	60 Hz SI			**AFG.18.180**	**AFG.13.180**	**AFG.27.180**	**AFG.37.180**	**-**
	60 Hz US			**AFG.24.71**	**AFG.17.71**	**AFG.36.71**	**AFG.50.71**	**-**
	Kit No	*95038580*	*95038581*	*95038585*	*95038749*	*95038584*	*95038583*	*95038582*
1060	Sun wheel	1	1	-	-	-	-	-
1061	Retaining ring	3	3	-	-	-	-	-
1062	Ring gear	1	1	-	-	-	-	-
1063	Planet gear	3	3	-	-	-	-	-
1065	Roller	57	57	-	-	-	-	-
1066	Washer	3	3	-	-	-	-	-
1067	Planet carrier	1	1	-	-	-	-	-
1068	Planet pin	3	3	-	-	-	-	-
1069	Cover	1	1	-	-	-	-	-
1071	O-ring	1	-	-	-	-	-	-
	Sun wheel i = 5.6	-	-	1	-	-	-	-
	Sun wheel i = 4.83	-	-	-	-	1	-	-
1076	Sun wheel i = 4.28	-	-	-	-	-	1	-
	Sun wheel i = 3.55	-	-	-	-	-	-	1
	Sun wheel i = 6.75	-	-	-	1	-	-	-
1077	Retaining ring A 20	-	-	3	3	3	3	3
1079	Ring gear Z=69	-	-	1	1	1	1	1
	Planet gear i = 5.6	-	-	3	-	-	-	-
	Planet gear i = 4.83	-	-	-	-	3	-	-
1080	Planet gear i = 4.28	-	-	-	-	-	3	-
	Planet gear i = 3.55	-	-	-	-	-	-	3
	Planet gear i = 6.75	-	-	-	3	-	-	-
1081	Roller	-	-	114	114	114	114	114
1082	Washer 2 mm	-	-	3	3	3	3	3
	Planet carrier i = 5.6	-	-	1	-	-	-	-
	Planet carrier i = 4.83	-	-	-	-	1	-	-
1083	Planet carrier i = 4.28	-	-	-	-	-	1	-
	Planet carrier i = 3.55	-	-	-	-	-	-	1
	Planet carrier i = 6.75	-	-	-	1	-	-	-
1084	Planet pin	-	-	3	3	3	3	3
1085	Cover	-	-	1	1	1	1	1
1087	Gear coupling	-	1	-	-	-	-	-
1089	Retaining ring	-	-	1	1	1	1	1
1156	Washer	3	3	-	-	-	-	-
1163	Washer 2 mm	-	-	3	3	3	3	3

Propeller

Pos.	Description/Kit No	*95038558*
1104	Lip seal	2
1105	Parallel key	1
1106	Slotted nut	2
1109	Hub cover	1
1110	Washer	1
1111	Hexagon head screw	1
1112	Hub (2 blades)	1
1115	Hexagon head screw	4
1116	Grooved pin	2
1157	Gasket	1
1159	Washer	8
1160	Nut	4
1161	Hexagon head screw	2
1162	Propeller blade type III / 95	2

AFG non-ATEX

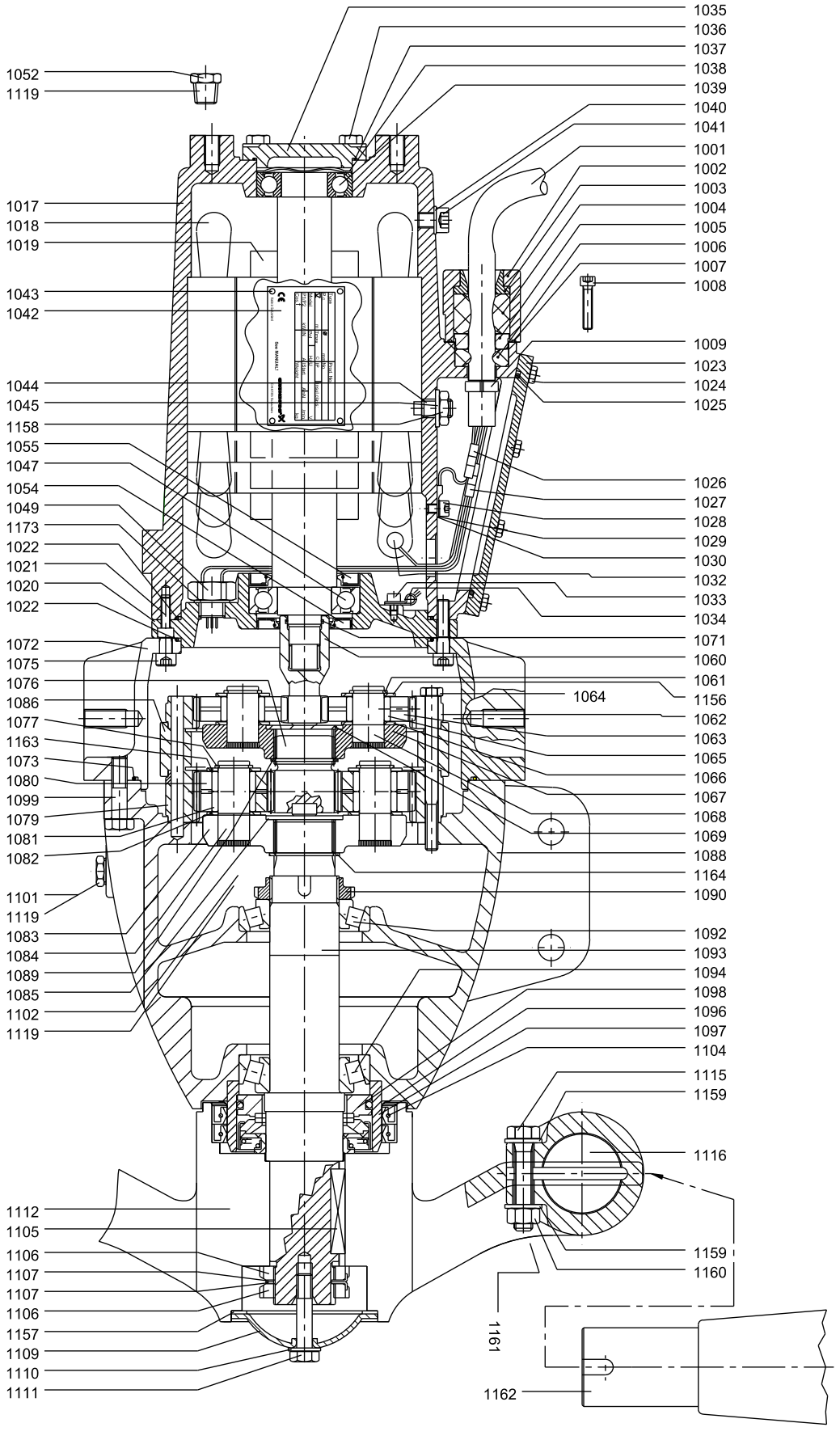
1035
1036
1037
1038
1039
1040
1041
1001
1002
1003
1004
1005
1006
1007
1008
1009
1023
1024
1025
1026
1027
1028
1029
1030
1032
1033
1034
1071
1060
1061
1156
1062
1063
1065
1066
1067
1068
1069
1088
1164
1090
1092
1093
1094
1098
1096
1097
1104
1115
1159
1116
1159
1160
1161
1162
1052
1119
1017
1018
1019
1043
1042
1044
1045
1158
1055
1047
1054
1049
1173
1022
1021
1020
1022
1072
1075
1076
1086
1077
1163
1073
1080
1099
1079
1081
1082
1101
1119
1083
1084
1089
1085
1102
1119
1064
1112
1105
1106
1107
1107
1106
1157
1109
1110
1111
TM035482

AFG.xx.180.xx.Ex (50 Hz only)

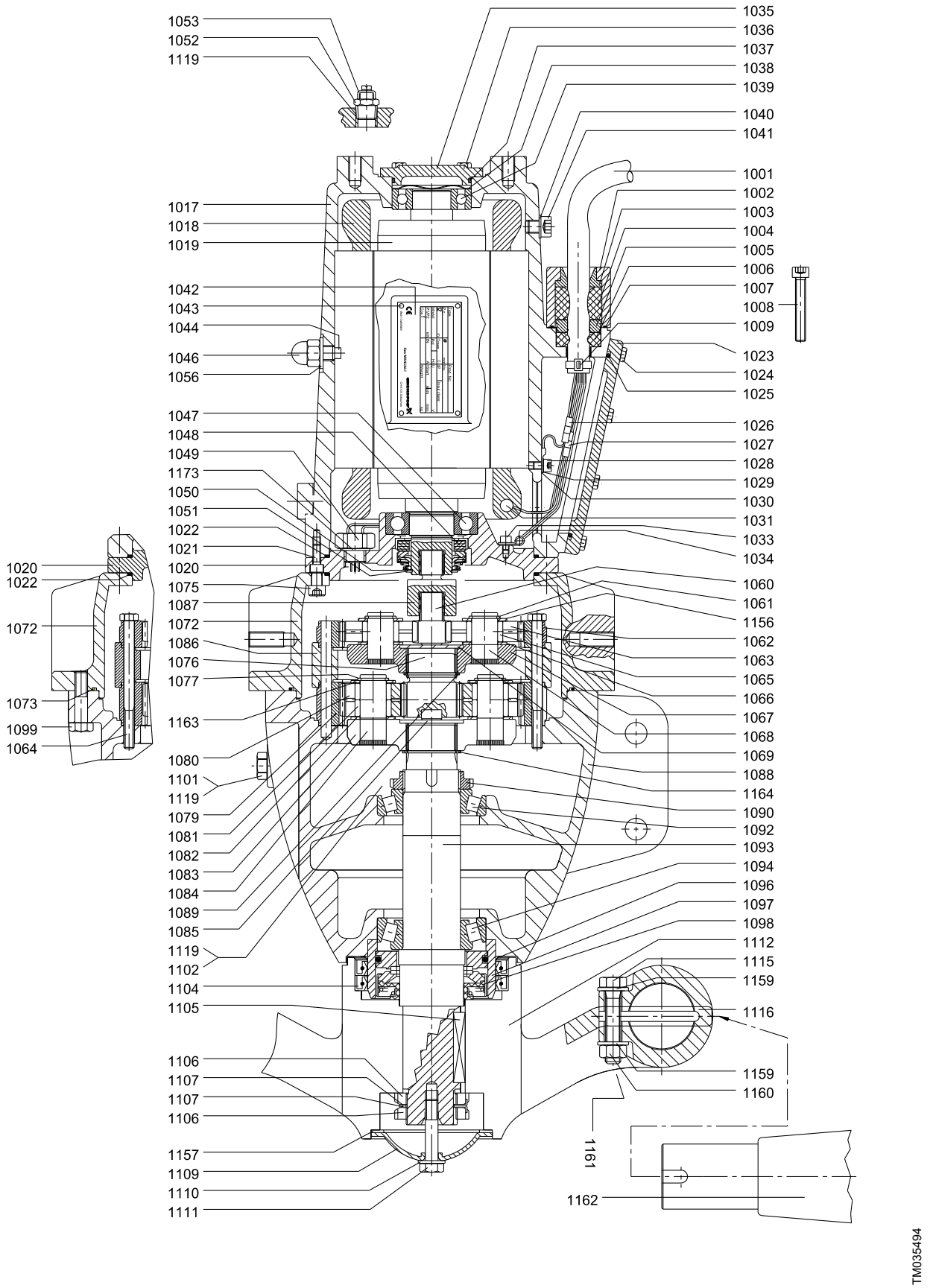

Motor

Pos.	Description		Non-Ex version		Ex version (50 Hz only)	
		50 Hz	AFG.13.180 AFG.18.180	AFG.24.180 AFG.37.180	AFG.13.180 AFG.18.180	AFG.24.180 AFG.37.180
		60 Hz SI	AFG.13.180 AFG.18.180	AFG.27.180 AFG.37.180	-	-
		60 Hz US	AFG.17.71 AFG.24.71	AFG.36.71 AFG.50.71	-	-
		Kit No	*95038405*	*95038406*	*95038407*	*95038408*
1002	Cable flange		1	1	1	1
1007	O-ring		1	1	1	1
1008	Hexagon socket head cap screw		2	2	2	2
1017	Motor housing		1	1	1	1
1018	Stator 4-pole		1	1	1	1
1019	Rotor with shaft 4-pole		1	1	1	1
1020	Motor flange		1	1	1	1
1021	Hexagon socket head cap screw		3	3	3	3
1022	O-ring		2	2	2	2
1023	Terminal box cover		1	1	1	1
1024	Hexagon head screw		8	8	8	8
1025	O-ring		1	1	1	1
1028	Hexagon socket head cap screw		1	1	1	1
1029	Lock washer		1	1	1	1
1033	Hexagon socket head cap screw		1	1	1	1
1034	Cable clamp		1	1	1	1
1035	Bearing cover		1	1	1	1
1036	Hexagon head screw		4	4	4	4
1037	O-ring		1	1	1	1
1038	Compensation disc		1	1	1	1
1039	Ball bearing		1	1	-	-
	Ball bearing		-	-	1	1
1040	Washer		1	1	1	1
1041	Hexagon socket head cap screw		1	1	1	1
1044	Set screw		1	1	1	1
1045	Spring washer		1	1	-	-
1046	Nut		-	-	1	1
1047	Ball bearing		1	1	-	-
	Ball bearing		-	-	1	1
1048	Mechanical shaft seal		-	-	1	1
1049	Water-in-oil sensor		1	1	1	1
1050	Shim		-	-	1	1
1051	Retaining ring		-	-	1	1
1052	Plug		1	1	1	1
1053	Connection for protective earthing		-	-	1	1
1054	Lip seal		1	1	-	-
1055	Lip seal		1	1	-	-
1056	Seal washer		-	-	1	1
1119	PTFE tape		1	1	1	1
1158	Nut		1	1	-	-
1173	Seal washer		1	1	1	1

AFG non-ATEX

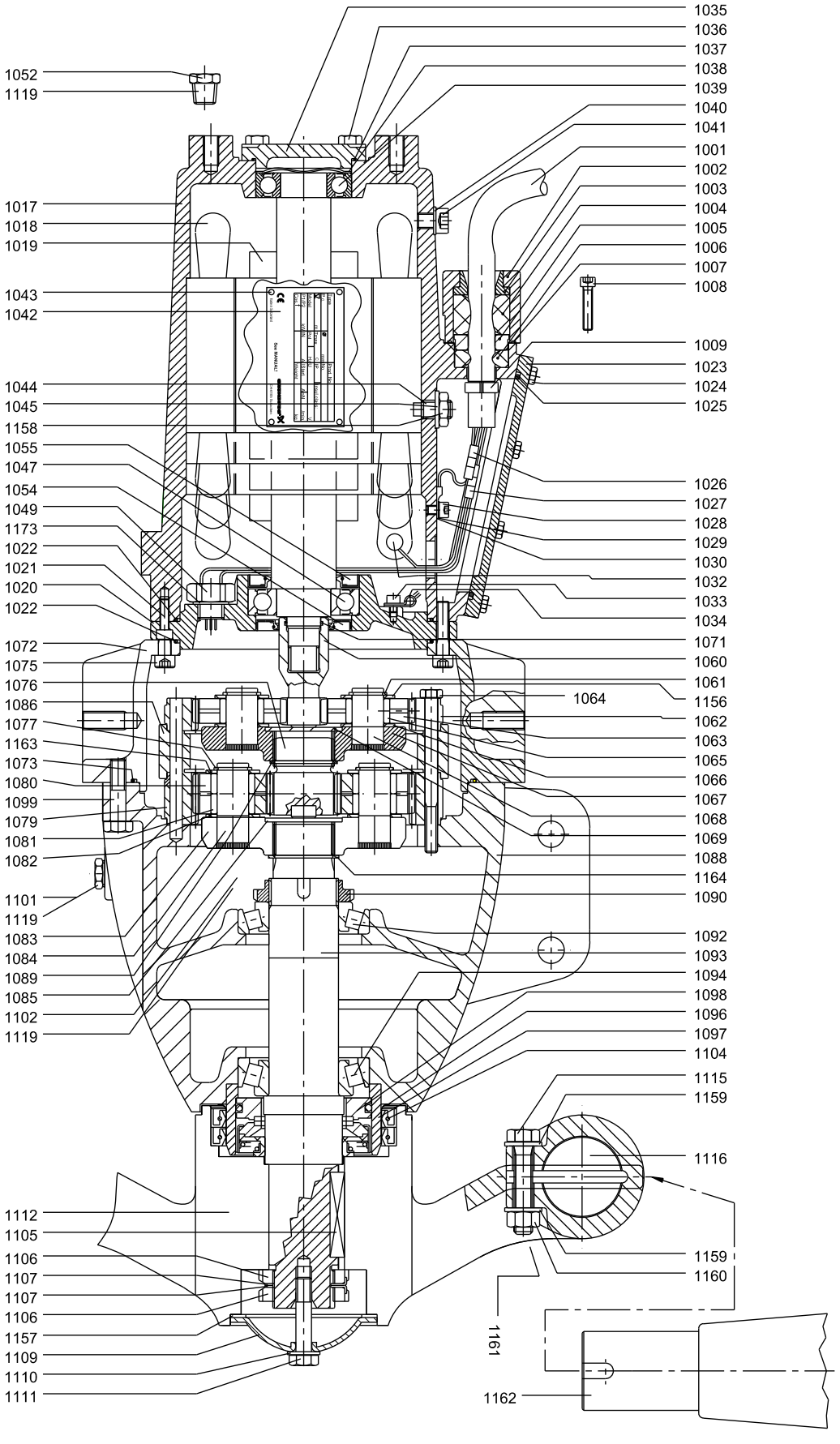
1035
1036
1037
1038
1039
1040
1041
1001
1002
1003
1004
1005
1006
1007
1008
1009
1023
1024
1025
1026
1027
1028
1029
1030
1032
1033
1034
1071
1060
1061
1156
1062
1063
1065
1066
1067
1068
1069
1088
1164
1090
1092
1093
1094
1098
1096
1097
1104
1115
1159
1116
1159
1160
1161
1162
1052
1119
1017
1018
1019
1043
1042
1044
1045
1158
1055
1047
1054
1049
1173
1022
1021
1020
1022
1072
1075
1076
1086
1077
1163
1073
1080
1099
1079
1081
1082
1064
1101
1119
1083
1084
1089
1085
1102
1119
1112
1105
1106
1107
1107
1106
1157
1109
1110
1111
TM035482

AFG.xx.180.xx.Ex (50 Hz only)

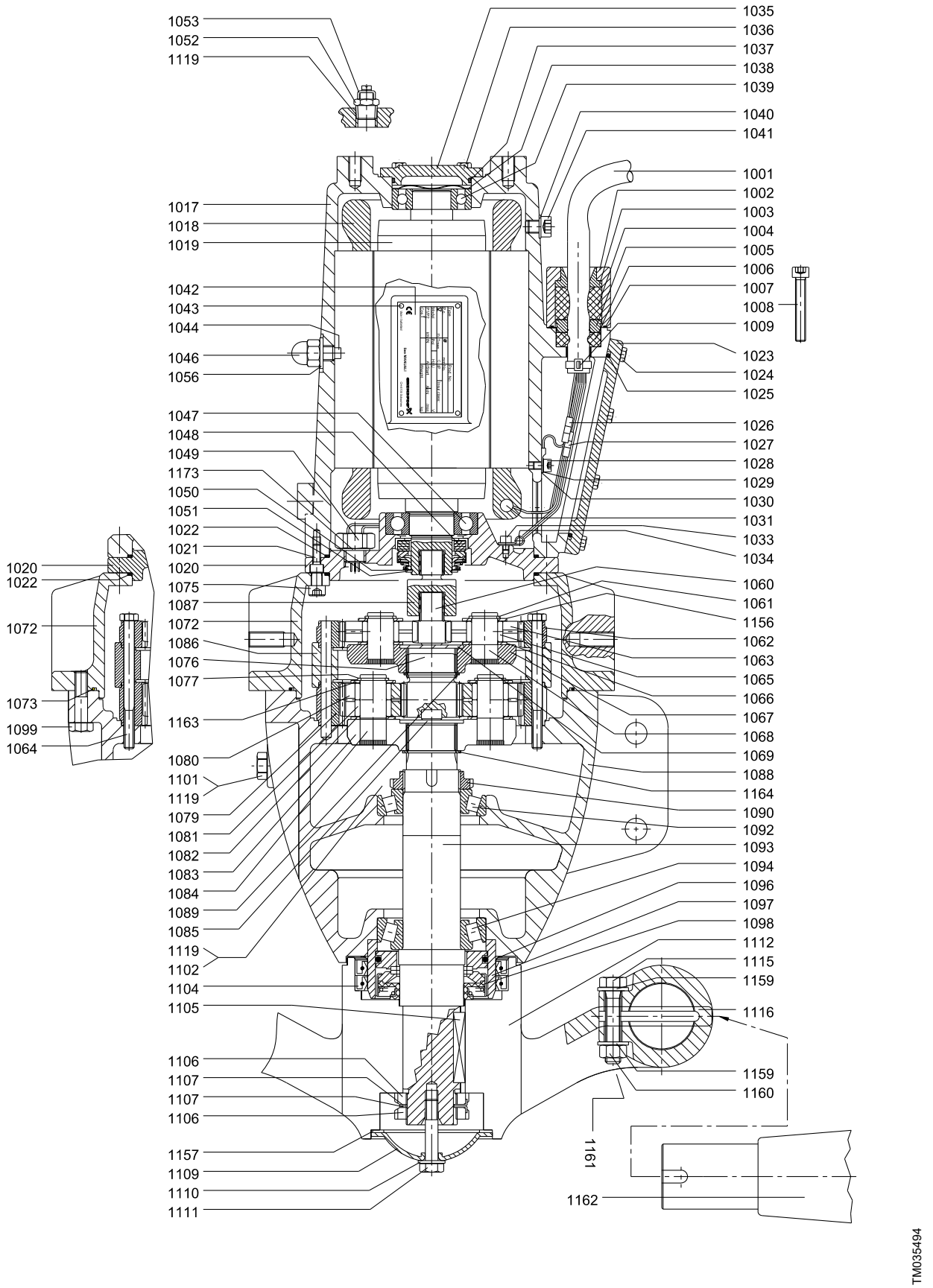

AFG.xx.230.xx (50/60 Hz) and AFG.xx.91.xx (60 Hz North America)

Bearing, motor

Pos.	Description/Kit No		95065458
1038	Compensation disc		1
1039	Ball bearing 6206 2RS		1
1047	Ball bearing 6207 2RS		1

Bearing, gearbox

Pos.	Description/Kit No		95065467
1090	Slotted nut; elastic stop		1
1092	Tapered roller bearing 30209		1
1094	Tapered roller bearing 32209		1

Cable entry, 1.5 mm^2

Pos.	Description/Kit No		95065457
1003	Cable guide		1
1004	cable seal, large		1
1005	Thrust washer		1
1006	cable seal, small		1
1007	O-ring	37.82 x 1.78	1
1008	Hexagon socket head cap screw		2
1009	Cable relief		1
1025	O-ring	113.97 x 2.62	1
1026	Cable joint		6
1027	Cable joint		4
1030	Cable shoe		1
-	Shrink tube for connections		10

Cable

Pos.	Description/Kit No	95038410	95038411	95038412
1001	Cable	10 m /30 ft	15 m/50 ft	25 m/80 ft
1026	Cable joint	6	6	6
1027	Cable joint	4	4	4
1030	Cable shoe	1	1	1

Gear housing

Pos.	Description/Kit No	95038481
1088	Gear housing	1
1090	Slotted nut; elastic stop	1
1092	Tapered roller bearing	1
1093	Gear shaft	1
1094	Tapered roller bearing	1
1101	Drain plug with magnet	1
1102	Plug	2
1119	PTFE tape	1
1164	Retaining ring A 40	1

Gasket kit

Pos.	Description/Kit No		95065482
1004	cable seal, large		1
1006	cable seal, small		1
1007	O-ring	37.82 x 1.78	1
1022	O-ring	158.42 x 2.62	2
1025	O-ring	113.97 x 2.62	1
1037	O-ring	63.22 x 1.78	1
1054	Lip seal	62 x 32 x 8	1
1055	Lip seal	72 x 40 x 7	1
1071	O-ring	21.95 x 1.78	1
1073	O-ring	215.57 x 2.62	1
1157	Gasket	96 x 75 x 2	1

Gasket kit, Ex version (50 Hz only)

Pos.	Description/Kit No		95065483
1004	cable seal, large		1
1006	cable seal, small		1
1007	O-ring	37.82 x 1.78	1
1022	O-ring	158.42 x 2.62	2
1025	O-ring	113.97 x 2.62	1
1037	O-ring	56.82 x 2.62	1
1048	Mechanical shaft seal		1
1050	Shim		1
1051	Retaining ring		1
1073	O-ring	215.57 x 2.62	1
1157	Gasket	96 x 75 x 2	1

Radial seal

Pos.	Description/Kit No		95039131
1104	Lip seal	120 x 100 x 12	2
1108	O-ring	94.92 x 2.62	1
	O-ring	184.0 x 3.0	1
	O-ring	225.0 x 3.0	1
1110	Washer	∅10.5 / 20 x 2	1
1157	Gasket	96 x 75 x 2	1

Shaft seal

Pos.	Description/Kit No	95065470
1098	Mechanical shaft seal	1

Slotted nut

Pos.	Description/Kit No	95038489
1106	Slotted nut	2
1107	Lock washer	2

Water-in-oil sensor

Pos.	Description/Kit No	95038409
1049	Water-in-oil sensor	1
1173	Seal washer	1

Wear ring

Pos.	Description/Kit No		Standard
			95037375
1097	Wear ring ceramic		1
1104	Lip seal	120 x 100 x 12	2
1108	O-ring	94.92 x 2.62	1
	O-ring	184.0 x 3.0	1
	O-ring	225.0 x 3.0	1
1157	Gasket	96 x 75 x 2	1

AFG non-ATEX

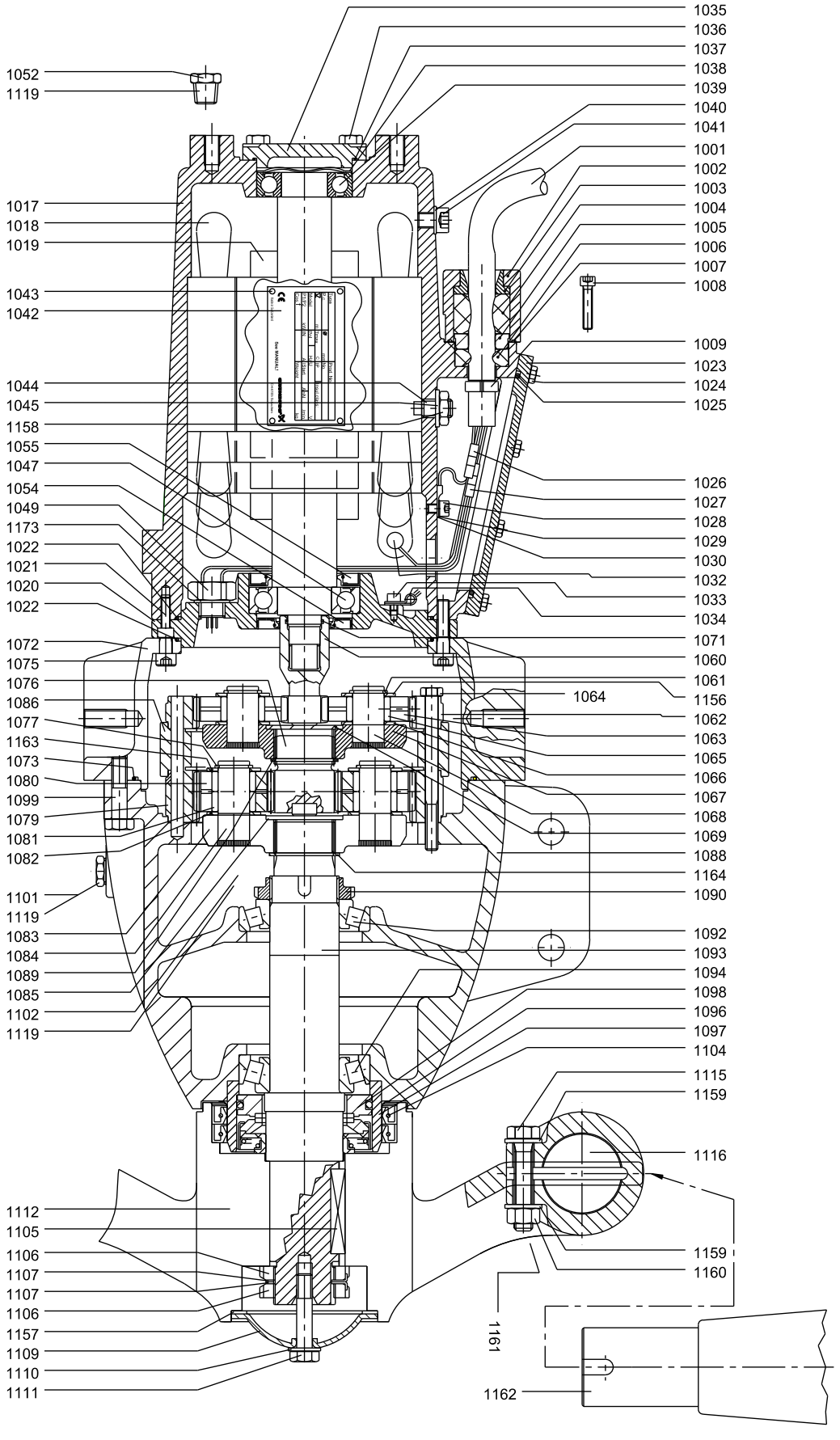
1035
1036
1037
1038
1039
1040
1041
1001
1002
1003
1004
1005
1006
1007
1008
1009
1023
1024
1025
1026
1027
1028
1029
1030
1032
1033
1034
1071
1060
1061
1156
1062
1063
1065
1066
1067
1068
1069
1088
1164
1090
1092
1093
1094
1098
1096
1097
1104
1115
1159
1116
1159
1160
1161
1162
1052
1119
1017
1018
1019
1043
1042
1044
1045
1158
1055
1047
1054
1049
1173
1022
1021
1020
1022
1072
1075
1076
1086
1077
1163
1073
1080
1099
1079
1081
1082
1101
1119
1083
1084
1089
1085
1102
1119
1064
1112
1105
1106
1107
1107
1106
1157
1109
1110
1111
TM035482

AFG.xx.230.xx.Ex (50 Hz only)

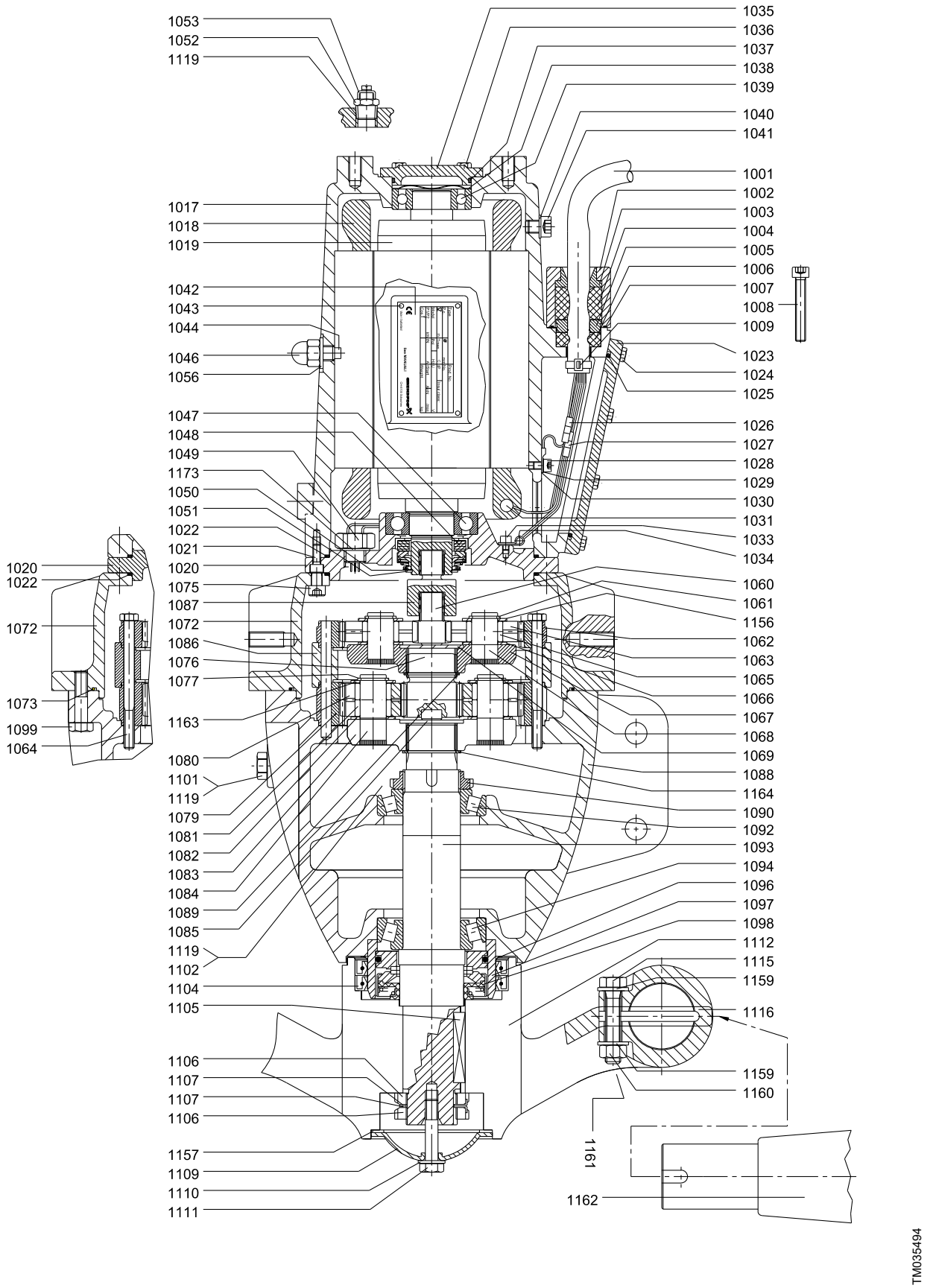

Gear

Pos.	Description		Step 1		Step 2			
		50 Hz	All Non-Ex version	All Ex version	AFG.30.230	-	AFG.15.230 AFG.40.230	AFG.22.230
		60 Hz SI			AFG.15.230 AFG.40.230	AFG.30.230	AFG.22.230	-
		60 Hz US			AFG.20.91 AFG.55.91	AFG.40.91	AFG.30.91	-
		Kit No	*95038580*	*95038581*	*95038585*	*95038749*	*95038584*	*95038583*
1060	Sun wheel		1	1	-	-	-	-
1061	Retaining ring		3	3	-	-	-	-
1062	Ring gear		1	1	-	-	-	-
1063	Planet gear		3	3	-	-	-	-
1065	Roller		57	57	-	-	-	-
1066	Washer		3	3	-	-	-	-
1067	Planet carrier		1	1	-	-	-	-
1068	Planet pin		3	3	-	-	-	-
1069	Cover		1	1	-	-	-	-
1071	O-ring		1	-	-	-	-	-
1076	Sun wheel i = 5.6		-	-	1	-	-	-
	Sun wheel i = 4.83		-	-	-	-	1	-
	Sun wheel i = 4.28		-	-	-	-	-	1
	Sun wheel i = 6.75		-	-	-	1	-	-
1077	Retaining ring		-	-	3	3	3	3
1079	Ring gear		-	-	1	1	1	1
1080	Planet gear i = 5.6		-	-	3	-	-	-
	Planet gear i = 4.83		-	-	-	-	3	-
	Planet gear i = 4.28		-	-	-	-	-	3
	Planet gear i = 6.75		-	-	-	3	-	-
1081	Roller		-	-	114	114	114	114
1082	Washer		-	-	3	3	3	3
1083	Planet carrier i = 5.6		-	-	1	-	-	-
	Planet carrier i = 4.83		-	-	-	-	1	-
	Planet carrier i = 4.28		-	-	-	-	-	1
	Planet carrier i = 6.75		-	-	-	1	-	-
1084	Planet pin		-	-	3	3	3	3
1085	Cover		-	-	1	1	1	1
1087	Gear coupling		-	1	-	-	-	-
1089	Retaining ring		-		1	1	1	1
1156	Washer		3	3	-	-	-	-
1163	Washer		-	-	3	3	3	3

Propeller

Pos.	Description			
		50 Hz	AFG.15.230 AFG.22.230	AFG.30.230 AFG.40.230
		60 Hz SI	AFG.15.230 AFG.22.230	AFG.30.230 AFG.40.230
		60 Hz US	AFG.20.91 AFG.30.91	AFG.40.91 AFG.55.91
		No of blades	2 blades	3 blades
		Kit No	*95038559*	*95038560*
1104	Lip seal		2	2
1105	Parallel key		1	1
1106	Slotted nut		2	2
1109	Hub cover		1	1
1110	Washer		1	1
1111	Hexagon head screw		1	1
1112	Hub		1	1
1115	Hexagon head screw		4	6
1116	Grooved pin		2	-
			-	3
1157	Gasket		1	1
1159	Washer		8	12
1160	Nut		4	6
1161	Hexagon head screw		2	3
1162	Propeller blade type III / 95		2	3

AFG non-ATEX

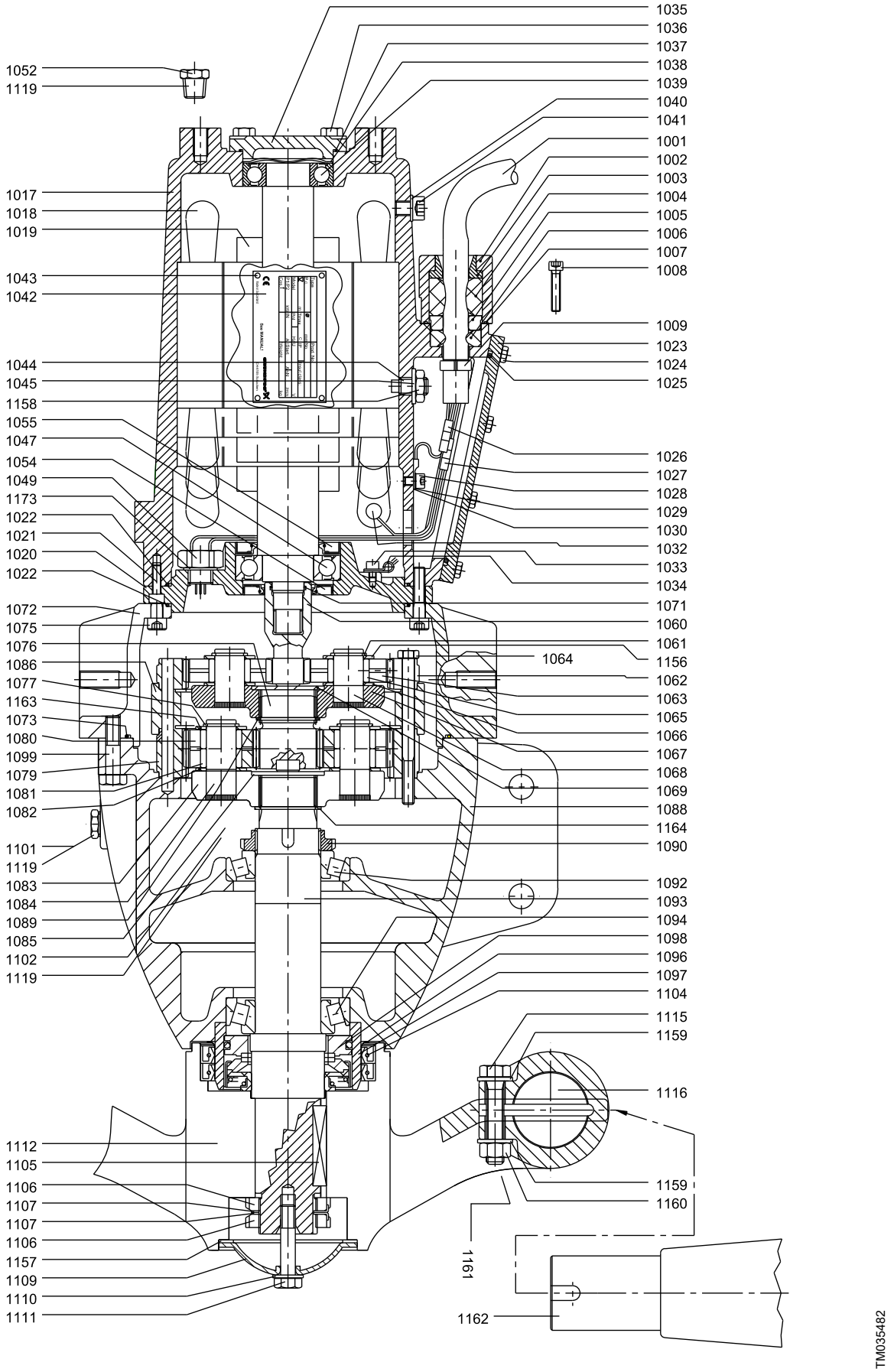
1035
1036
1037
1038
1039
1040
1041
1001
1002
1003
1004
1005
1006
1007
1008
1009
1023
1024
1025
1026
1027
1028
1029
1030
1032
1033
1034
1071
1060
1061
1156
1062
1063
1065
1066
1067
1068
1069
1088
1164
1090
1092
1093
1094
1098
1096
1097
1104
1115
1159
1116
1159
1160
1161
1162
1052
1119
1017
1018
1019
1043
1042
1044
1045
1158
1055
1047
1054
1049
1173
1022
1021
1020
1022
1072
1075
1076
1086
1077
1163
1073
1080
1099
1079
1081
1082
1101
1119
1083
1084
1089
1085
1102
1119
1064
1112
1105
1106
1107
1107
1106
1157
1109
1110
1111
TM035482

AFG.xx.230.xx.Ex (50 Hz only)

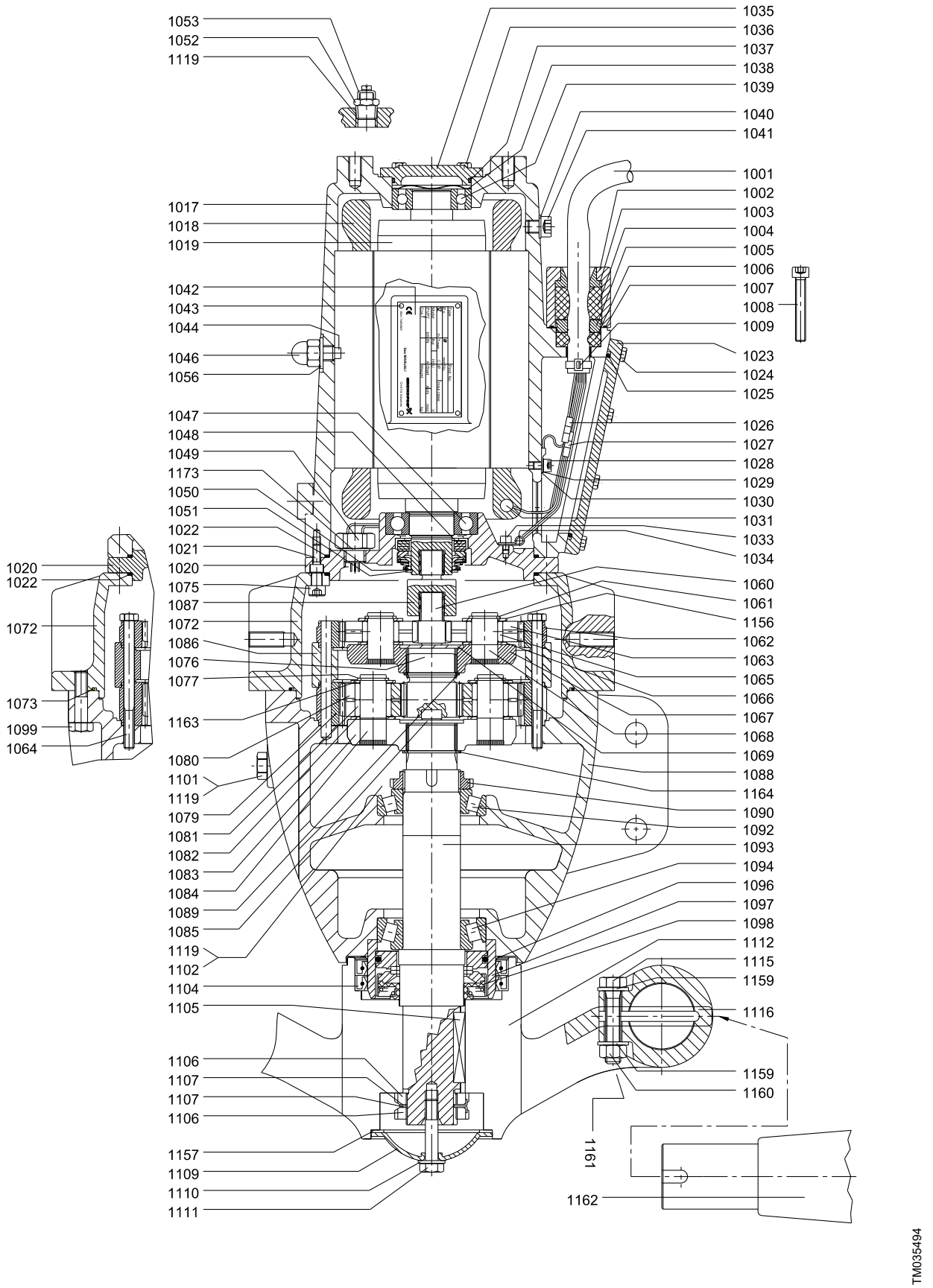

Motor

Pos.	Description		Non-Ex version		Ex version (50 Hz only)	
		50 Hz	AFG.15.230 AFG.22.230	AFG.30.230 AFG.40.230	AFG.15.230 AFG.22.230	AFG.30.230 AFG.40.230
		60 Hz SI	AFG.15.230 AFG.22.230	AFG.30.230 AFG.40.230	-	-
		60 Hz US	AFG.20.91 AFG.30.91	AFG.40.91 AFG.55.91	-	-
		Kit No	*95038561*	*95038406*	*95038562*	*95038408*
1002	Cable flange		1	1	1	1
1007	O-ring		1	1	1	1
1008	Hexagon socket head cap screw		2	2	2	2
1017	Motor housing		1	1	1	1
1018	Stator		1	1	1	1
1019	Rotor with shaft		1	1	1	1
1020	Motor flange		1	1	1	1
1021	Hexagon socket head cap screw		3	3	3	3
1022	O-ring		2	2	2	2
1023	Terminal box cover		1	1	1	1
1024	Hexagon head screw		8	8	8	8
1025	O-ring		1	1	1	1
1028	Hexagon socket head cap screw		1	1	1	1
1029	Lock washer		1	1	1	1
1033	Hexagon socket head cap screw		1	1	1	1
1034	Cable clamp		1	1	1	1
1035	Bearing cover		1	1	1	1
1036	Hexagon head screw		4	4	4	4
1037	O-ring		1	1	1	1
1038	Compensation disc		1	1	1	1
1039	Ball bearing		1	1	-	-
	Ball bearing		-	-	1	1
1040	Washer		1	1	1	1
1041	Hexagon socket head cap screw		1	1	1	1
1044	Set screw		1	1	1	1
1045	Spring washer		1	1	-	-
1046	Nut		-	-	1	1
1047	Ball bearing		1	1	-	-
	Ball bearing		-	-	1	1
1048	Mechanical shaft seal		-	-	1	1
1049	Water-in-oil sensor		1	1	1	1
1050	Shim		-	-	1	1
1051	Retaining ring		-	-	1	1
1052	Plug		1	1	1	1
1053	Connection for protective earthing		-	-	1	1
1054	Lip seal		1	1	-	-
1055	Lip seal		1	1	-	-
1056	Seal washer		-	-	1	1
1119	PTFE tape		1	1	1	1
1158	Nut		1	1	-	-
1173	Seal washer		1	1	1	1

AFG non-ATEX

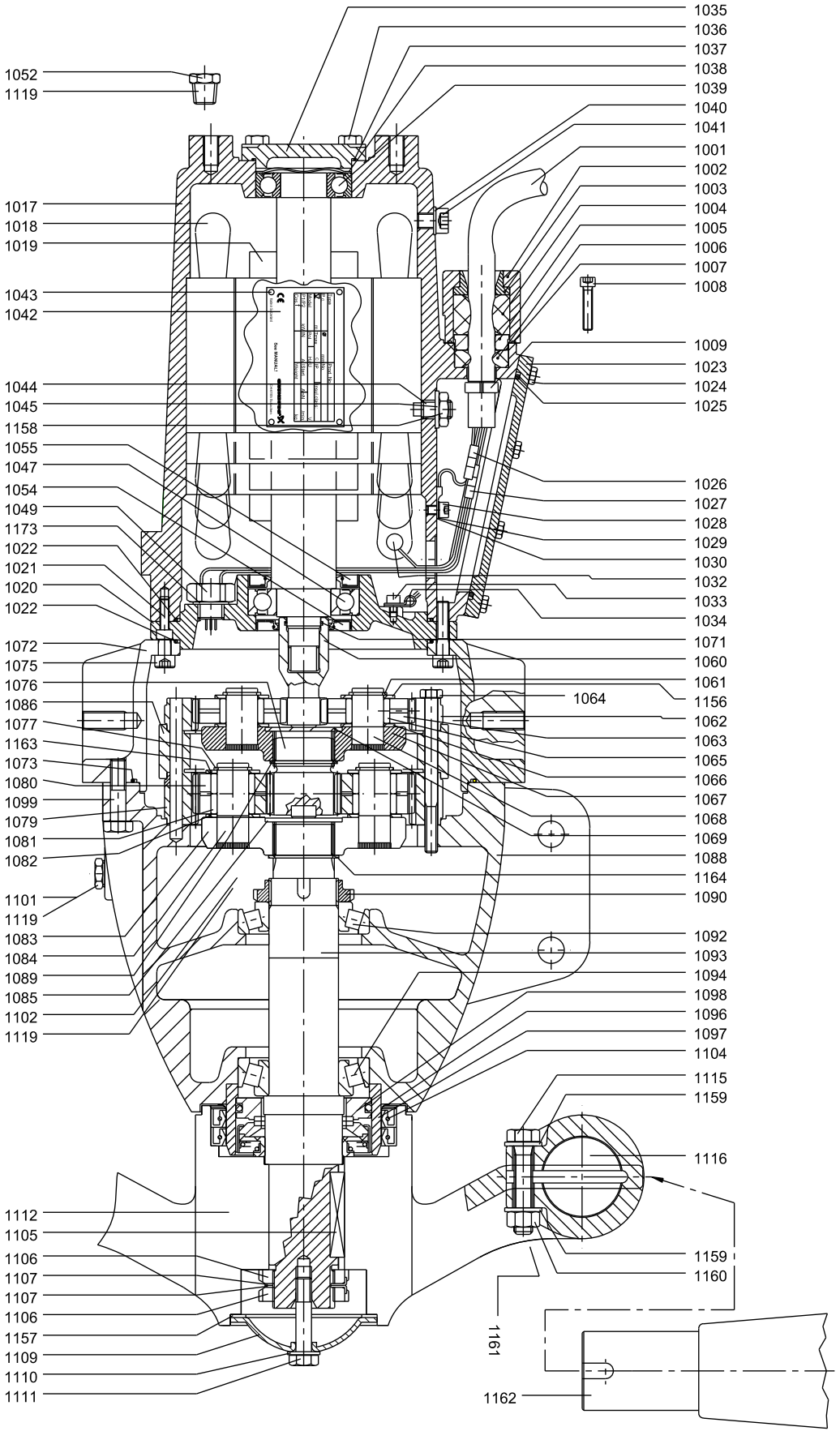
1035
1036
1037
1038
1039
1040
1041
1001
1002
1003
1004
1005
1006
1007
1008
1009
1023
1024
1025
1026
1027
1028
1029
1030
1032
1033
1034
1071
1060
1061
1156
1062
1063
1065
1066
1067
1068
1069
1088
1164
1090
1092
1093
1094
1098
1096
1097
1104
1115
1159
1116
1159
1160
1161
1162
1052
1119
1017
1018
1019
1043
1042
1044
1045
1158
1055
1047
1054
1049
1173
1022
1021
1020
1022
1072
1075
1076
1086
1077
1163
1073
1080
1099
1079
1081
1082
1064
1101
1119
1083
1084
1089
1085
1102
1119
1112
1105
1106
1107
1107
1106
1157
1109
1110
1111
TM035482

AFG.xx.230.xx.Ex (50 Hz only)

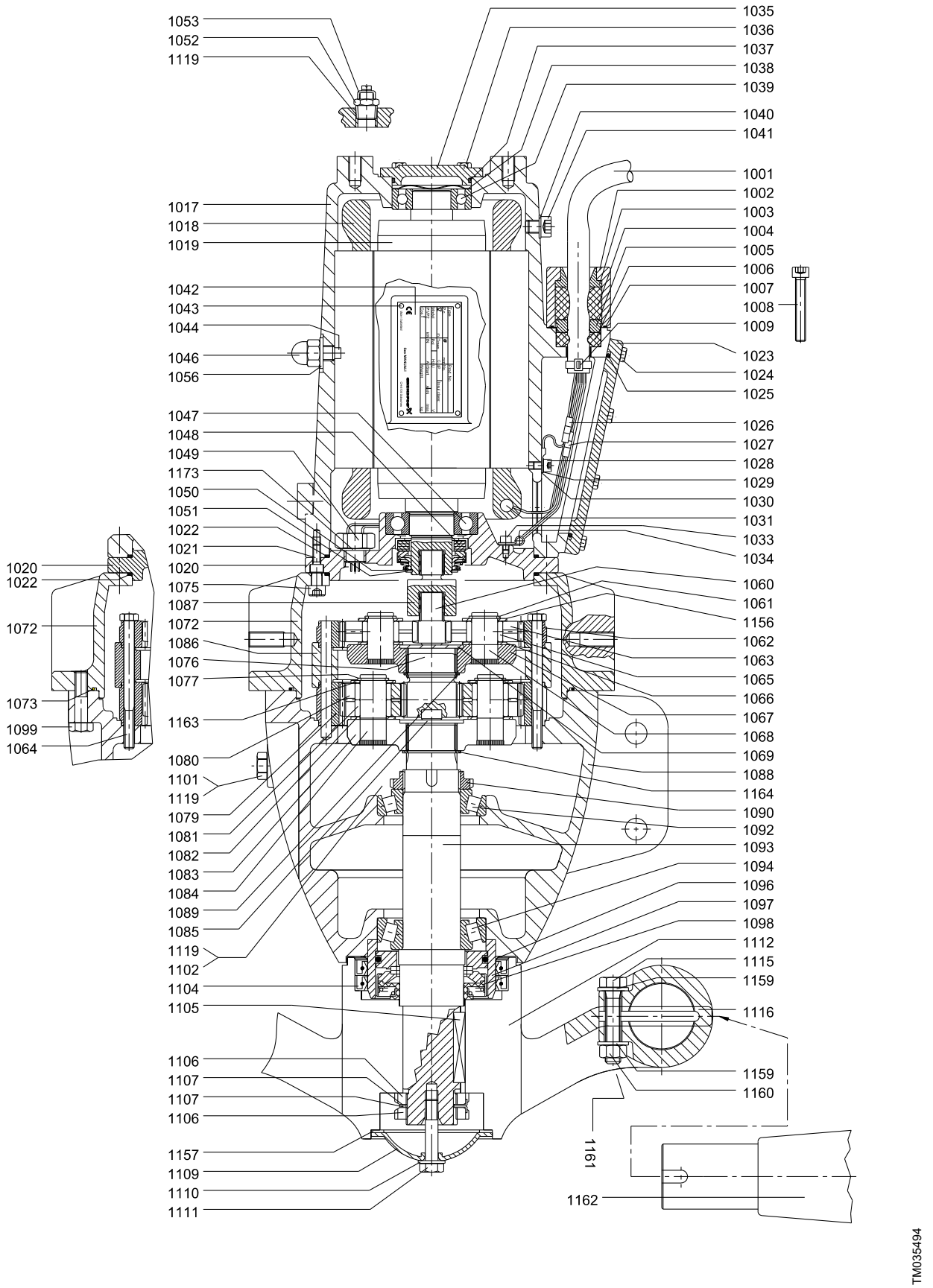

AFG.xx.260 (50/60 Hz) and AFG.xx.102 (60 Hz North America)

Bearing, motor

Pos.	Description/Kit No	*96645955*
1038	Compensation disc	1
1039	Ball bearing 6208 2RS	1
1047	Ball bearing 6010 2RS	1

Bearing, gearbox

Pos.	Description/Kit No	*95065475*
1090	Slotted nut	1
1091	Lock washer	1
1092	Tapered roller bearing 30212	1
1094	Tapered roller bearing 33212	1

Cable

Pos.	Description/Kit No	*95038486*	*95038487*	*95038488*
1001	Cable	10 m /30 ft	15 m/50 ft	25 m/80 ft
1026	Cable joint	6	6	6
1027	Cable joint	4	4	4
1030	Cable shoe	1	1	1

Cable entry, 2.5 mm^2

Pos.	Description/Kit No		*95065465*
1003	Cable guide		1
1004	cable seal, large		1
1005	Thrust washer		1
1006	cable seal, small		1
1007	O-ring	54.0 x 3.0	1
1008	Hexagon socket head cap screw		2
1009	Cable relief		1
1025	O-ring	139.29 x 3.53	1
1026	Cable joint		6
1027	Cable joint		4
1030	Cable shoe		1
-	Shrink tube for con-nections		10

Gear housing

Pos.	Description/Kit No	*95038588*
1088	Gear housing	1
1090	Slotted nut	1
1091	Lock washer	1
1092	Tapered roller bearing	1
1093	Gear shaft	1
1094	Tapered roller bearing	1
1101	Drain plug with magnet	1
1102	Plug	2
1119	PTFE tape	1

Gasket kit

Pos.	Description/Kit No		*95035812*
1004	cable seal, large		1
1006	cable seal, small		1
1007	O-ring	54.0 x 3.0	1
1022	O-ring	215.57 x 2.62	2
1025	O-ring	139.29 x 3.53	1
1037	O-ring	75.87 x 2.62	1
1048	Mechanical shaft seal		1
1050	Shim	63 x 50 x 0.5	1
1051	Retaining ring		1
1073	O-ring	260.0 x 3.5	1
1108	O-ring	94.92 x 2.62	1

Radial seal

Pos.	Description/Kit No		*95039132*
1104	Lip seal	150 x 125 x 12	2
1108	O-ring	120.2 x 3.53	1
	O-ring	225.0 x 3.0	1
	O-ring	94.92 x 2.62	1
1110	Washer	∅13 / 24 x 2.5	1

Shaft seal

Pos.	Description/Kit No	*95065478*
1095	Intermediate ring	1
1098	Mechanical shaft seal	1

Slotted nut

Pos.	Description	*95038489*
1106	Description/Kit No	2
1107	Lock washer	2

Water-in-oil sensor

Pos.	Description/Kit No	*95038409*
1049	Water-in-oil sensor	1
1173	Seal washer	1

Wear ring

Pos.	Description/Kit No		Standard
			95037376
1097	Wear ring ceramic		1
1104	Lip seal	150 x 125 x 12	2
1108	O-ring	120.2 x 3.53	1
	O-ring	225.0 x 3.0	1
	O-ring	94.92 x 2.62	1

AFG non-ATEX

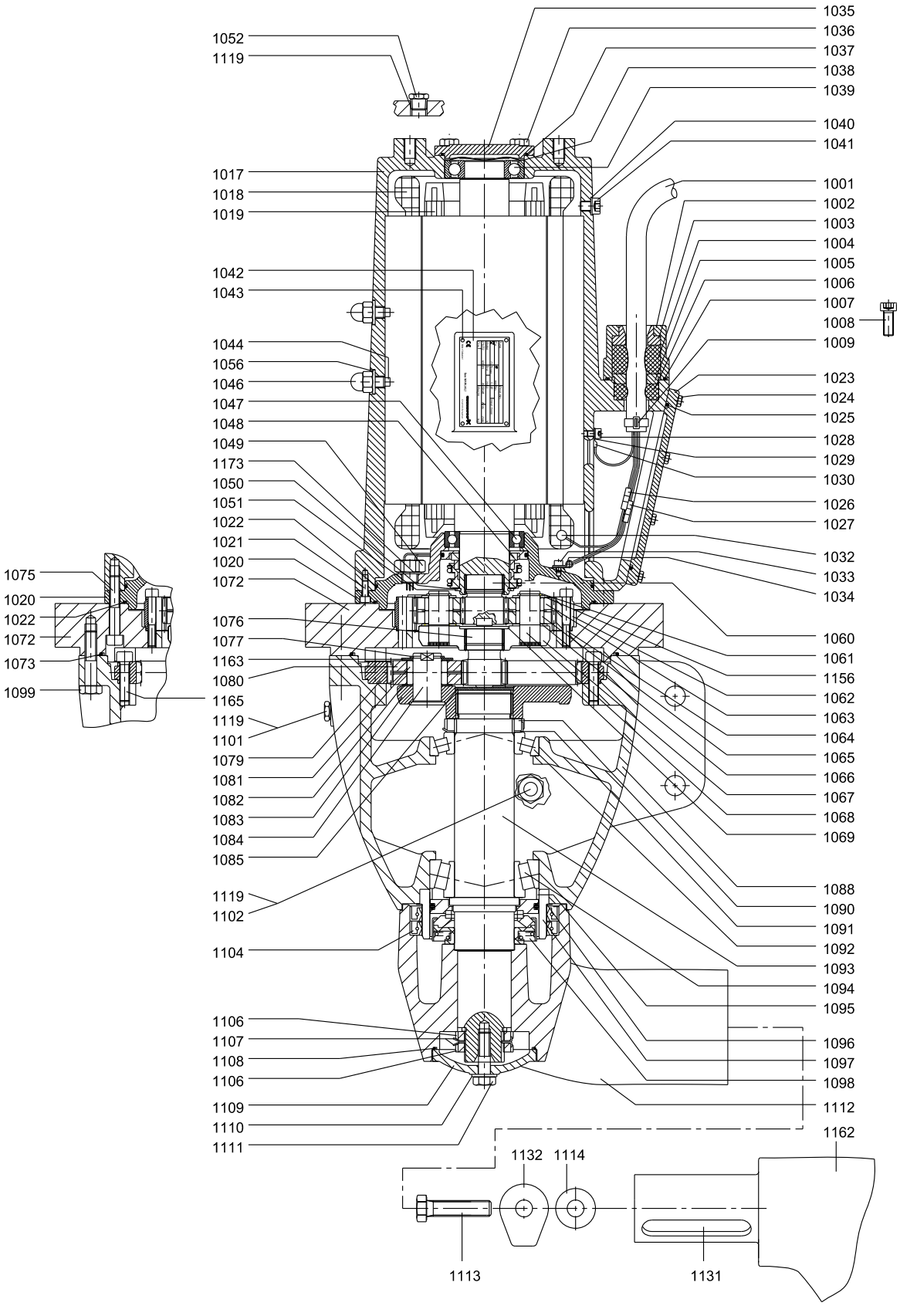
1052
1119
1017
1018
1019
1042
1043
1044
1056
1046
1047
1048
1049
1173
1050
1051
1022
1021
1020
1072
1076
1077
1163
1080
1165
1119
1101
1079
1081
1082
1083
1084
1085
1119
1102
1104
1106
1107
1108
1106
1109
1110
1111
1075
1020
1022
1072
1073
1099
1035
1036
1037
1038
1039
1040
1041
1001
1002
1003
1004
1005
1006
1007
1008
1009
1023
1024
1025
1028
1029
1030
1026
1027
1032
1033
1034
1060
1061
1156
1062
1063
1064
1065
1066
1067
1068
1069
1088
1090
1091
1092
1093
1094
1095
1096
1097
1098
1112
1162
1132
1114
1113
1131
TM040190

Gear

Pos.	Description						
		50 Hz	AFG.30.260 AFG.46.260 AFG.60.260 AFG.65.260	AFG.75.260	AFG.34.260 AFG.48.260	AFG.40.260 AFG.58.260	AFG.55.260
		60 Hz SI	-	-	AFG.55.260 AFG.75.260	-	-
		60 Hz US	-	-	AFG.75.102 AFG.100.102	-	-
			Step 1	Step 1	Step 1	Step 1	Step 1
		Kit No	*95065518*	*95065517*	*95065524*	*95065495*	*95065515*
1060	Sun wheel i = 4.83		1	-	-	-	-
	Sun wheel i = 5.6		-	1	-	-	-
	Sun wheel i = 6.75		-	-	1	-	-
	Sun wheel i = 4.28		-	-	-	1	-
	Sun wheel i = 3.87		-	-	-	-	1
1061	Retaining ring		3	3	3	3	3
1062	Ring gear		1	1	1	1	1
1063	Planet gear i = 4.83		3	-	-	-	-
	Planet gear i = 5.6		-	3	-	-	-
	Planet gear i = 6.75		-	-	3	-	-
	Planet gear i = 4.28		-	-	-	3	-
	Planet gear i = 3.87		-	-	-	-	3
1065	Roller		114	114	114	114	114
1066	Washer		3	3	3	3	3
1067	Planet carrier		1	1	1	1	1
1068	Planet pin		3	3	3	3	3
1069	Cover		1	1	1	1	1
1156	Washer		3	3	3	3	3

Pos.	Description					
		50 Hz	AFG.60.260	AFG.75.260 AFG.34.260 AFG.48.260	AFG.30.260 AFG.40.260 AFG.55.260 AFG.58.260	AFG.46.260 AFG.65.260
		60 Hz SI	-	AFG.55.260 AFG.75.260	-	-
		60 Hz US	-	AFG.75.102 AFG.100.102	-	-
			Step 2	Step 2	Step 2	Step 2
		Kit No	*95038611*	*95065496*	*95038769*	*95065525*
1076	Sun wheel i = 4.57		1	-	-	-
	Sun wheel i = 4.12		-	1	-	-
	Sun wheel i = 6.0		-	-	1	-
	Sun wheel i = 5.16		-	-	-	1
1077	Retaining ring		3	3	3	3
1079	Ring gear		1	1	1	1
1080	Planet gear i = 4.57		3	-	-	-
	Planet gear i = 4.12		-	3	-	-
	Planet gear i = 6.0		-	-	3	-
	Planet gear i = 5.16		-	-	-	3
1081	Roller		108	108	108	108
1082	Washer		3	3	3	3
1083	Planet carrier		1	1	1	1
1084	Planet pin		3	3	3	3
1085	Cover		1	1	1	1
1163	Washer		3	3	3	3

Propeller

Pos.	Description		2 blades	3 blades
		Kit No	*95038586*	*95038587*
1104	Lip seal		2	2
1106	Slotted nut		2	2
1108	O-ring		1	1
1109	Hub cover		1	1
1110	Washer		1	1
1111	Hexagon head screw		1	1
1112	Hub		1	1
1113	Hexagon head screw		2	3
1114	Washer		2	3
1131	Parallel key		2	3
1132	Blinds		2	3
1162	Propeller blade		2	3

AFG non-ATEX

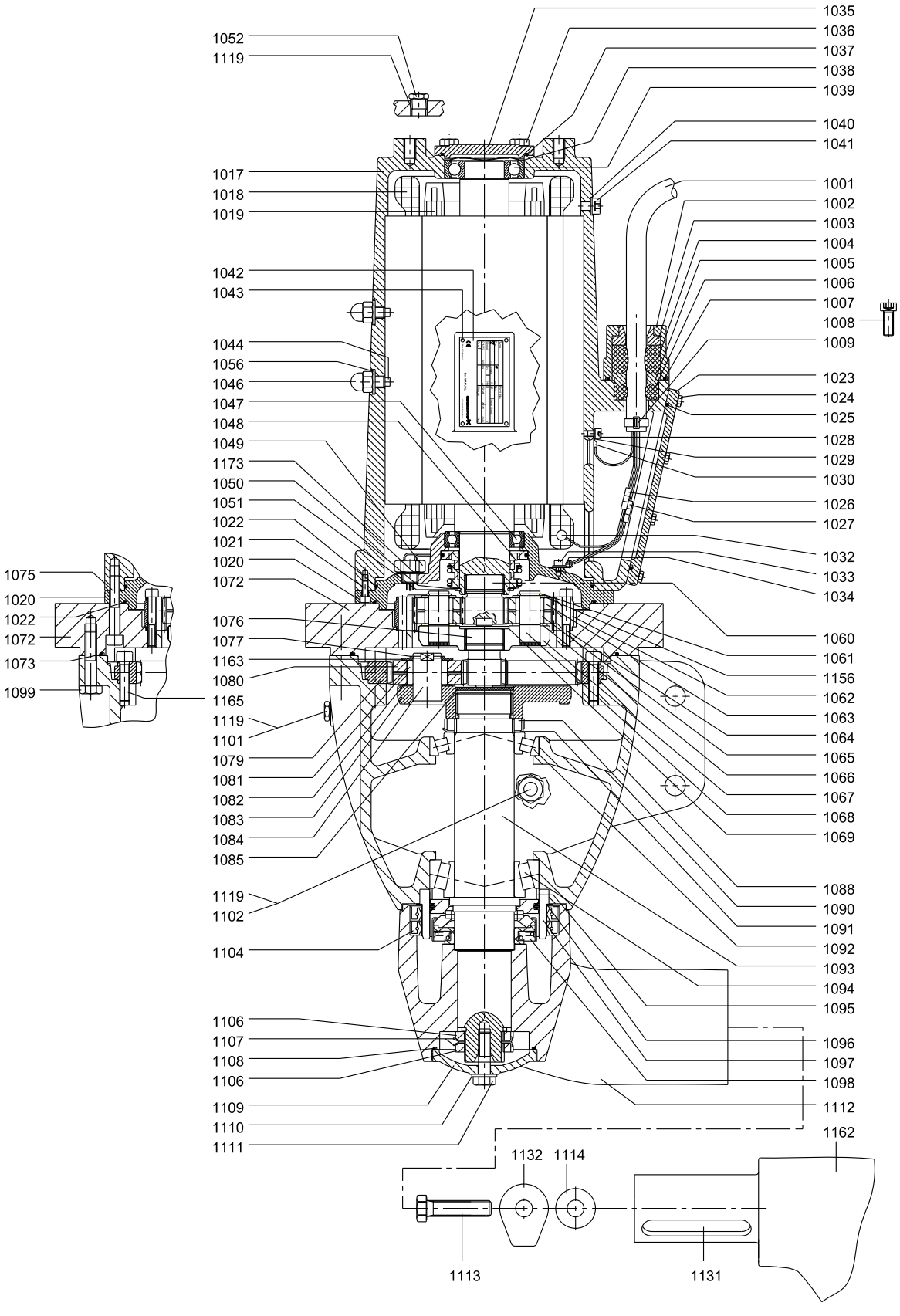

TM040190

Motor

Pos.	Description		Non-Ex version		Ex version (50 Hz only)	
		50 Hz	AFG.30.260 AFG.34.260 AFG.40.260 AFG.60.260	AFG.46.260 AFG.48.260 AFG.55.260 AFG.58.260 AFG.65.260 AFG.75.260	AFG.60.260	AFG.75.260
		60 Hz SI	AFG.55.260	AFG.75.260	-	-
		60 Hz US	AFG.75.102	AFG.100.102	-	-
		Kit No	*95038589*	*95038590*	*95038591*	*95038592*
1002	Cable flange		1	1	1	1
1007	O-ring		1	1	1	1
1008	Hexagon socket head cap screw		2	2	2	2
1017	Motor housing		1	1	1	1
1018	Stator 6-pole		1	1	1	1
1019	Rotor with shaft 6-pole		1	1	1	1
1020	Motor flange		1	1	1	1
1021	Hexagon socket head cap screw		3	3	3	3
1022	O-ring		2	2	2	2
1023	Terminal box cover		1	1	1	1
1024	Hexagon head screw		8	8	8	8
1025	O-ring		1	1	1	1
1028	Hexagon socket cap screw		1	1	1	1
1029	Lock washer		1	1	1	1
1033	Hexagon socket head cap screw		1	1	1	1
1034	Cable clamp		1	1	1	1
1035	Bearing cover		1	1	1	1
1036	Hexagon head screw		4	4	4	4
1037	O-ring		1	1	1	1
1038	Compensation disc		1	1	1	1
1039	Ball bearing		1	1	1	1
1040	Washer		1	1	1	1
1041	Hexagon socket head cap screw		1	1	1	1
1044	Set screw		2	2	2	2
1046	Nut		2	2	2	2
1047	Ball bearing		1	1	1	1
1048	Mechanical shaft seal		1	1	1	1
1049	Water-in-oil sensor		1	1	1	1
1050	Shim		1	1	1	1
1051	Retaining ring		1	1	1	1
1052	Plug		1	1	1	1
1053	Connection for protective earthing		-	-	1	1
1056	Seal washer		2	2	2	2
1119	PTFE tape		1	1	1	1
1173	Seal washer		1	1	1	1

AFG non-ATEX

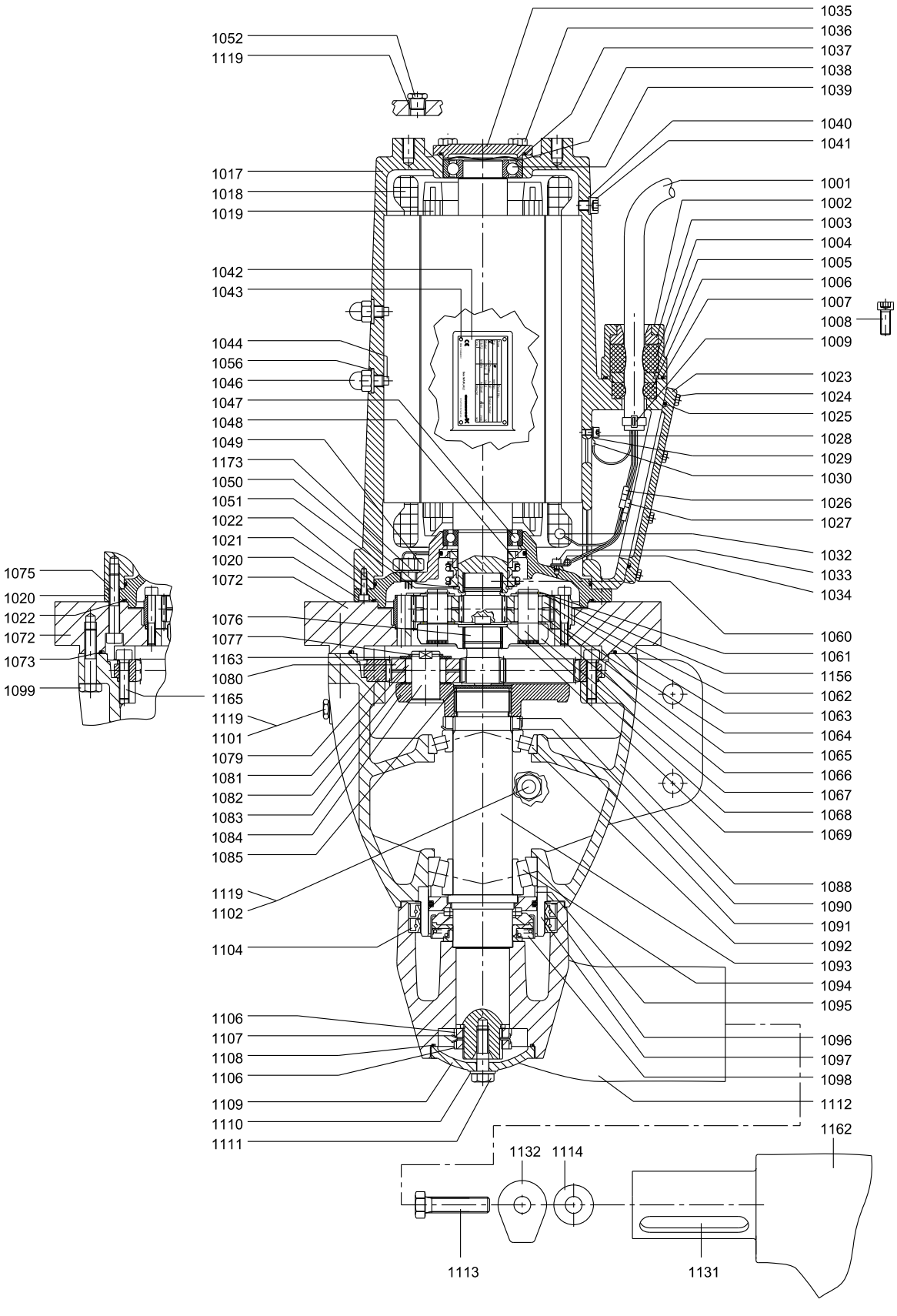
1052
1119
1017
1018
1019
1042
1043
1044
1056
1046
1047
1048
1049
1173
1050
1051
1022
1021
1020
1072
1076
1077
1163
1080
1165
1119
1101
1079
1081
1082
1083
1084
1085
1119
1102
1104
1106
1107
1108
1106
1109
1110
1111
1075
1020
1022
1072
1073
1099
1035
1036
1037
1038
1039
1040
1041
1001
1002
1003
1004
1005
1006
1007
1008
1009
1023
1024
1025
1028
1029
1030
1026
1027
1032
1033
1034
1060
1061
1156
1062
1063
1064
1065
1066
1067
1068
1069
1088
1090
1091
1092
1093
1094
1095
1096
1097
1098
1112
1162
1132
1114
1113
1131
TM040190

SMD

SMD.09-18 (50/60 Hz) and SMD.13-23 (60 Hz North America)

Bearing, motor

Pos.	Description/Kit No	99010478
1038	Compensation disc	1
1039	Ball bearing	1
1047	Ball bearing	1
1058	Circlip	1

Cable (4G1.5+3x1.0)

Pos.	Description/Kit No	96591649	96659473
181	Cable with plug	10 m / 32 ft	15 m / 49 ft
198	O-ring	1	1

Cable screened (4G2.5+3x1.0)

Pos.	Description/Kit No	96102486	96689980
181	Cable with plug	10 m / 32 ft	15 m / 49 ft
198	O-ring	1	1

Connection

Pos.	Description/Kit No	99010477
1013	Male plug connector	1
1016	Circlip	2
1030	Cable shoe	1
1031	Connector pin	7

Bolts

Pos.	Description/Kit No	99010476
1021	Screw	3
1028	Screw	1
1029	Lock washer	1
1040	U-washer	1
1041	Screw	1
1111	Screw	1
1126	Screw	3
1144	Countersunk screw	3
1147	Countersunk screw	3
1149	Screw	2

Wear ring

Pos.	Description/Kit No	99010484
1146	Wear ring	1
1147	Countersunk screw	3

Stator with housing

Pos.	Description/Kit No	99010479
1017	Motor housing	1
1018	Stator	1

Gasket kit

Pos.	Description/Kit No		99010475
198	O-ring	34.0 x 3.0	1
1022	O-ring	105.0 x 3.5	1
1040	Washer		1
1098a	O-ring	50.0 x 3.0	2
1100	O-ring	17.86 x 2.62	1

Pos.	Description/Kit No		99010475
1102	Plug		3
1125	O-ring	139.29 x 3.53	1
1142	O-ring	92.0 x 3.5	1
1143	O-ring	135.0 x 2.5	1

Shaft seal

Pos.	Description/Kit No		99010482
1051	Circlip		1
1098	Mechanical shaft seal		1
1100	O-ring	17.86 x 2.62	1
1149	Screw		2

Moisture switch

Pos.	Description/Kit No	99010490
1027	Cable joint 1.5-2.5	2
1080	Moisture switch	1
1081	Moisture switch holder	1
1082	Screw	1
1084	Screw	2
1085	Lock nut	2
1167	Pin	1

Wear ring

Pos.	Description/Kit No		99010483
1097	Wear ring		1
1098a	O-ring	50.0 x 3.0	2
1102	Plug		3
1104	Lip seal		1
1142	O-ring	92.0 x 3.5	1
1143	O-ring	135.0 x 2.5	1

Lifting belt (SMD.09-18)

Pos.	Description/Kit No	99010480
1136 a	Washer	2
1138	Clamping ring	1
1139a	Screw	1
1140 a	Lock nut	1

Mounting belt (SMD.09-18.xx.T)

Pos.	Description/Kit No	99010481
1135	Mounting device	1
1136 a	Washer	2
1138	Clamping ring	1
1139a	Screw	1
1140 a	Lock nut	1
1183	Screw	2
1184	Washer	4
1185	Lock nut	2
1140	Lock nut	2
1136	Washer	4
1139	Screw	2

SMD

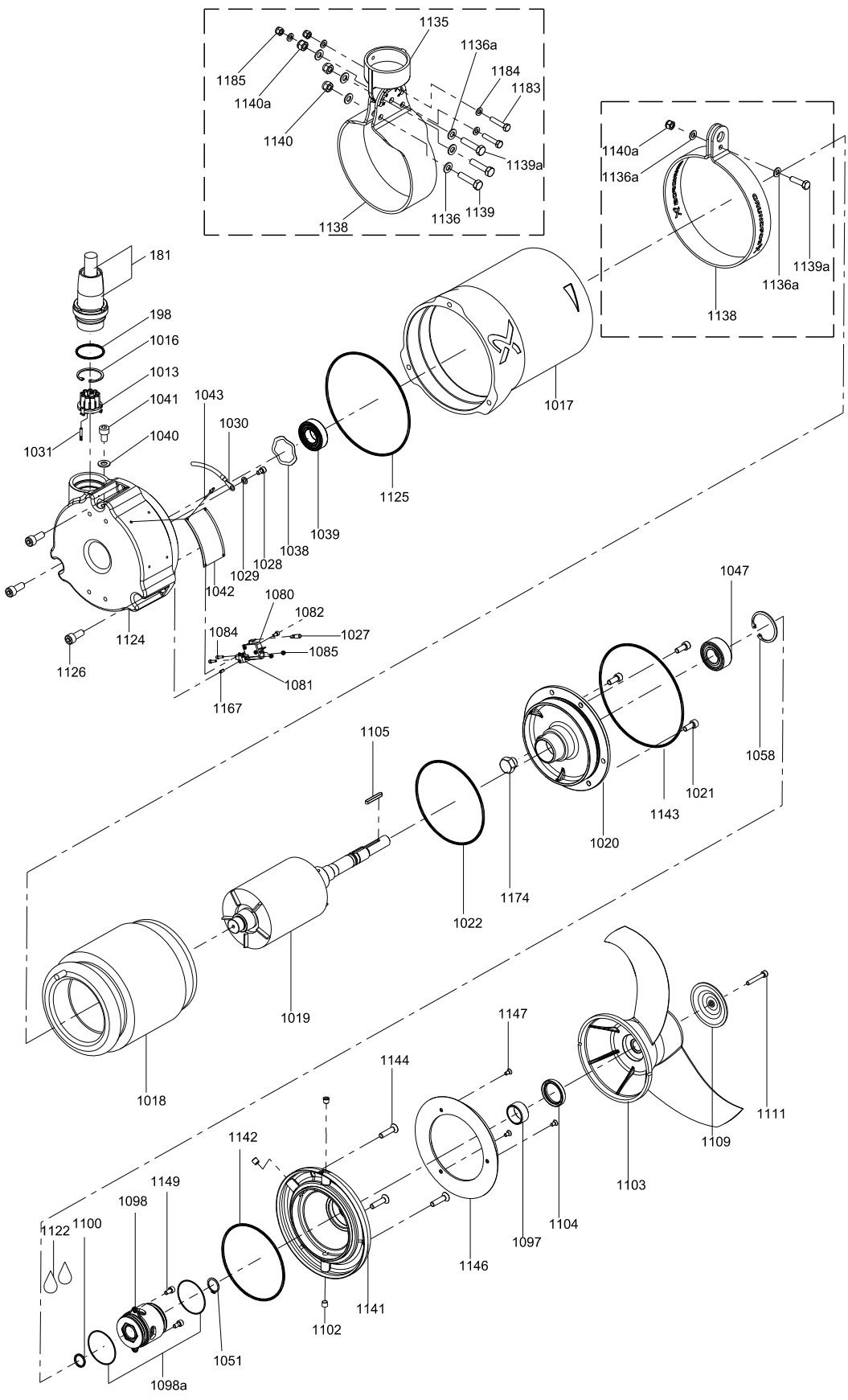
1135
1136a
1184
1183
1185
1140a
1140
1139a
1136
1139
1138
1140a
1136a
1139a
1136a
1138
181
198
1016
1013
1041
1040
1031
1043
1030
1039
1038
1028
1029
1042
1124
1126
1167
1081
1084
1080
1082
1027
1085
1125
1017
1047
1058
1105
1021
1143
1020
1174
1022
1019
1018
1147
1144
1142
1149
1098
1122
1100
1051
1098a
1141
1102
1146
1097
1104
1103
1109
1111
TM065260

Propeller

Pos.	Description	50 Hz	-	SMD.09.21	SMD.11.25	SMD.14.25	SMD.18.25
		60 Hz DIN	SMD.10.18	SMD.13.21	SMD.17.25	-	-
		60 Hz ANSI	SMD.13.7	SMD.17.8	SMD.23.10	-	-
		Kit No	*99010489*	*99010485*	*99010486*	*99010487*	*99010488*
1103	Propeller 1.0 kW (1.3 hp)		1	-	-	-	-
	Propeller 0.9/1.3 kW (1.7 hp)		-	1	-	-	-
	Propeller 1.1/1.7 kW (2.3 hp)		-	-	1	-	-
	Propeller 1.4 kW		-	-	-	1	-
	Propeller 1.8 kW		-	-	-	-	1
1104	Lip seal		1	1	1	1	1
1105	Parallel key		1	1	1	1	1
1109	Hub cover		1	1	1	1	1
1111	Screw		1	1	1	1	1

SMD

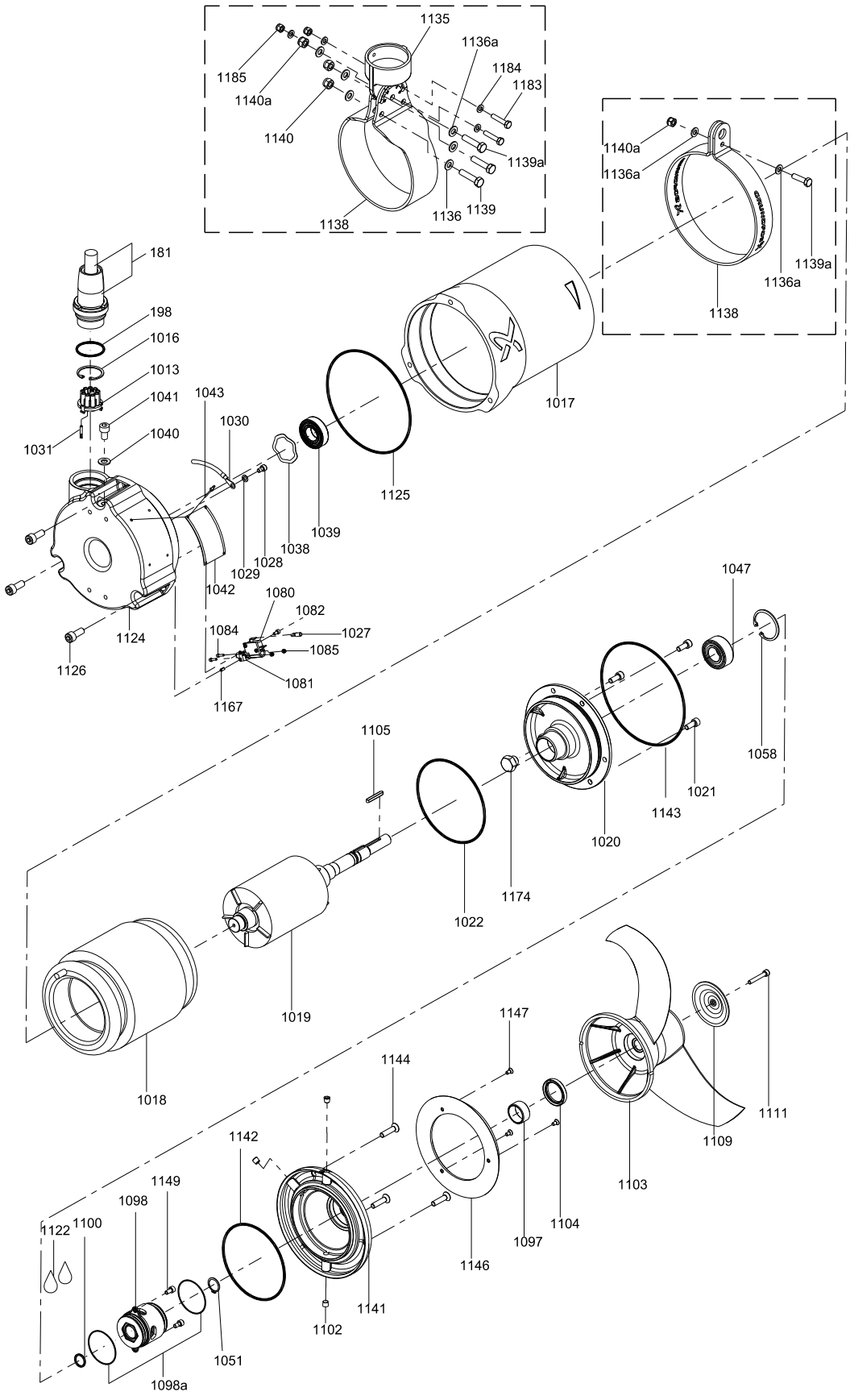

TM065260

SMD.19-35 (50/60 Hz) and SMD.30-47 (60 Hz North America)

Bearing, motor

Pos.	Description/Kit No	99010498
1038	Compensation disc	1
1039	Ball bearing	1
1047	Ball bearing	1
1058	Circlip	1

Bolts

Pos.	Description/Kit No	99010496
1021	Screw	3
1028	Screw	1
1029	Lock washer	1
1040	U-Washer	1
1041	Screw	1
1111	Countersunk screw	1
1126	Screw	3
1144	Countersunk screw	3
1147	Countersunk screw	3
1149	Screw	2

Cable (7G1.5+3x1.0)

Pos.	Description/Kit No	96689954	96689955
181	Cable with plug	10 m / 32 ft	15 m / 49 ft
198	O-ring	1	1

Cable screened (4G2.5+3x1.0)

Pos.	Description/Kit No	96102490	96102491
181	Cable with plug	10 m / 32 ft	15 m / 49 ft
198	O-ring	1	1

Connection

Pos.	Description/Kit No	99010497
1013	Male plug connector	1
1016	Circlip	1
1030	Cable shoe	1
1031	Connector pin	10

Gasket kit

Pos.	Description/Kit No		99010495
1007	O-ring	42.0 x 3 .0	1
1022	O-ring	144.5 x 3.53	1
1040	Washer		1
1098a	O-ring	50.0 x 3 .0	2
1100	O-ring	17.86 x 2.62	1
1102	Plug		3
1125	O-ring	180.0 x 3.5	1
1142	O-ring	129.77 x 3.53	1
1143	O-ring	183.83 x 2.62	1

Lifting belt

Pos.	Description/Kit No	99010500
1136a	Washer	2
1138	Clamping ring	1
1139 a	Screw	1
1140 a	Lock nut	1

Moisture switch

Pos.	Description/Kit No	99010490
1027	Cable joint 1.5-2.5	2
1080	Moisture switch	1
1081	Moisture switch holder	1
1082	Screw	1
1084	Screw	2
1085	Lock nut	2
1167	Pin	1

Stator with housing

Pos.	Description/Kit No	99010499
1017	Motor Housing	1
1018	Stator	1

Shaft seal

Pos.	Description/Kit No		99010482
1051	Circlip		1
1098	Mechanical shaft seal		1
1100	O-ring	17.86 x 2.62	1
1149	Screw		2

Wear ring

Pos.	Description/Kit No	99010502
1146	Wear ring	1
1147	Countersunk screw	3

Wear ring

Pos.	Description/Kit No		99010501
1097	Wear ring		1
1102	Plug		3
1104	Lip seal		1
1142	O-ring	129.77x3.53	1
1143	O-ring	183.83x2.62	1

Propeller

Pos.	Description	50 Hz		SMD.19.32	SMD.23.37	SMD.28.37	SMD.35.37
		60 Hz DIN	SMD.22.29	SMD.26/28.32	SMD.32/35.37		
		60 Hz ANSI	SMD.30.11	SMD.38.13	SMD.47.15		
		Kit No	*99010507*	*99010503*	*99010504*	*99010505*	*99010506*
1103	Propeller 2.2 kW (3.0 hp)		1	-	-	-	-
	Propeller 1.9/2.6/2.8 kW (3.8 hp)		-	1	-	-	-
	Propeller 2.3/3.2/3.5 kW (4.7 hp)		-	-	1	-	-
	Propeller 2.8 kW		-	-	-	1	-
	Propeller 3.5 kW		-	-	-	-	1
1104	Lip seal		1	1	1	1	1
1105	Parallel key		1	1	1	1	1
1109	Hub cover		1	1	1	1	1
1111	Screw		1	1	1	1	1

SMD

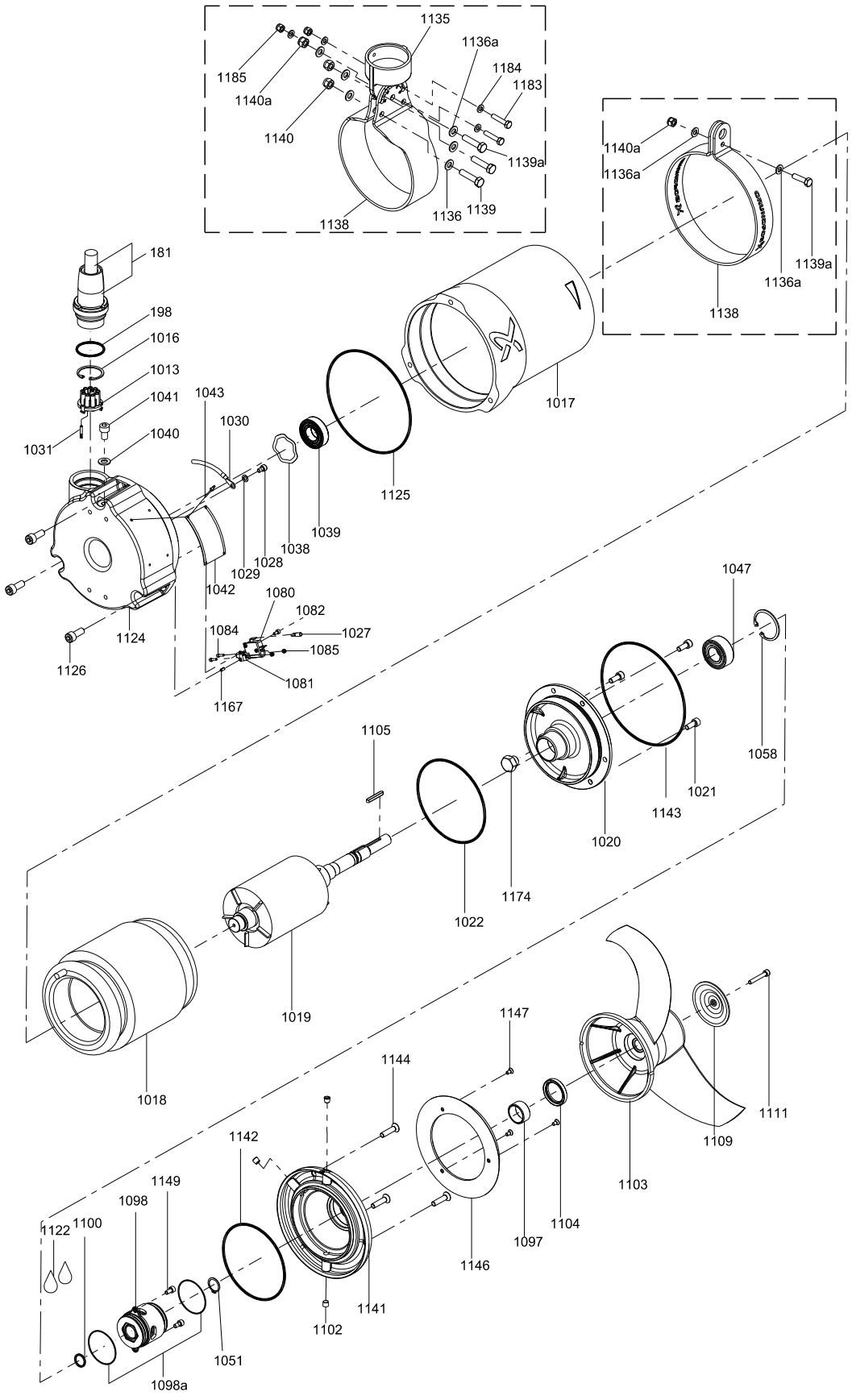
1135
1136a
1184
1183
1185
1140a
1140
1139a
1136
1139
1138
1140a
1136a
1139a
1136a
1138
181
198
1016
1013
1041
1040
1031
1043
1030
1017
1125
1039
1038
1028
1029
1042
1124
1126
1080
1082
1084
1027
1085
1081
1167
1047
1058
1105
1021
1143
1020
1174
1022
1019
1018
1147
1144
1111
1109
1103
1142
1149
1098
1122
1100
1104
1097
1146
1141
1102
1051
1098a
TM065260

SMG

SMG.09-40 (50/60 Hz) and SMG.12-55 (60 Hz North America)

Bearing, motor

Pos.	Description/Kit No	95065458
1038	Compensation disc	1
1039	Ball bearing 6206 2RS1/C3	1
1047	Ball bearing 6207 2RS1/C3	1

Bearing, gearbox

Pos.	Description/Kit No	95065459
1090	Slotted nut	1
1091	Lock washer	1
1092	Tapered roller bearing 30207	1
1094	Tapered roller bearing 30207	1

Cable (11G1.5)

Pos.	Description/Kit No	95038410	95038411
1001	Cable	10 m / 32 ft	15 m / 49 ft
1026	Cable joint	6	6
1027	Cable joint	4	4
1030	Cable shoe	1	1

Cable entry 1.5 mm^2

Pos.	Description/Kit No		95065457
1003	Cable guide		1
1004	cable seal, large		1
1005	Thrust washer		1
1006	cable seal, small		1
1007	O-ring	39.45 x 1.78	1
1008	Screw		2
1009	Cable relief		1
1025	O-ring	113.97 x 2.62	1
1026	Cable joint		10
1030	Cable shoe		1
-	Shrink tube for connections		10

Gear housing

Note: Gear housing kit parts are pre-assembled.

Pos.	Description/Kit No	95038404
1088	Gear housing	1
1089	Circlip	1
1090	Slotted nut	1
1091	Lock washer	1
1092	Tapered roller bearing 30207	1
1093	Gear shaft	1
1094	Tapered roller bearing 30207	1
1101	Drain plug with magnet	1
1102	Plug	2
1105	Parallel key	1
1095	Intermediate ring	1
1119	PTFE tape	1

Gasket kit

Pos.	Description/Kit No		95065456
1004	cable seal, large		1
1006	cable seal, small		1
1007	O-ring	39.45 x 1.78	1
1022	O-ring	158.42 x 2.62	2
1025	O-ring	113.97 x 2.62	1
1037	O-ring	56.82 x 2.62	1
1048	Mechanical shaft seal, rotor		1
	Mechanical shaft seal, stator		1
1050	Shim		1
1051	Circlip		1
1108	O-ring	85.0 x 2.5	1

Radial seal

Pos.	Description/Kit No		95039130
1022	O-ring	158.42 x 2.62	1
1104	Lip seal		2
1108	O-ring	85.0 x 2.5	1
	O-ring	105.0 x 3.0	1
	O-ring	184.0 x 3.0	1
1110	Washer		1
1157	Gasket NBR	70 D86/66 x 2	1
	Gasket NBR	70 D96 x 75 x 2	1

Shaft seal

Pos.	Description/Kit No	95065462
1095	Intermediate ring	1
1098	Mechanical shaft seal, rotor	1
	Mechanical shaft seal, stator	1

Water-in-oil sensor

Pos.	Description/Kit No	95038409
1049	Water-in-oil sensor	1
1173	Seal washer	1

Wear ring

Pos.	Description/Kit No		95037374
1022	O-ring	158.42 x 2.62	1
1097	Wear ring ceramic		1
1104	Lip seal		2
1108	O-ring	85.0 x 2.5	1
	O-ring	105.0 x 3.0	1
	O-ring	184.0 x 3.0	1
1110	Washer		1
1157	Gasket NBR	70 D86/66 x 2	1
	Gasket NBR	70 D96 x 75 x 2	1

SMG.09-40 (50/60 Hz) and SMG.12-55 (60 Hz North America)

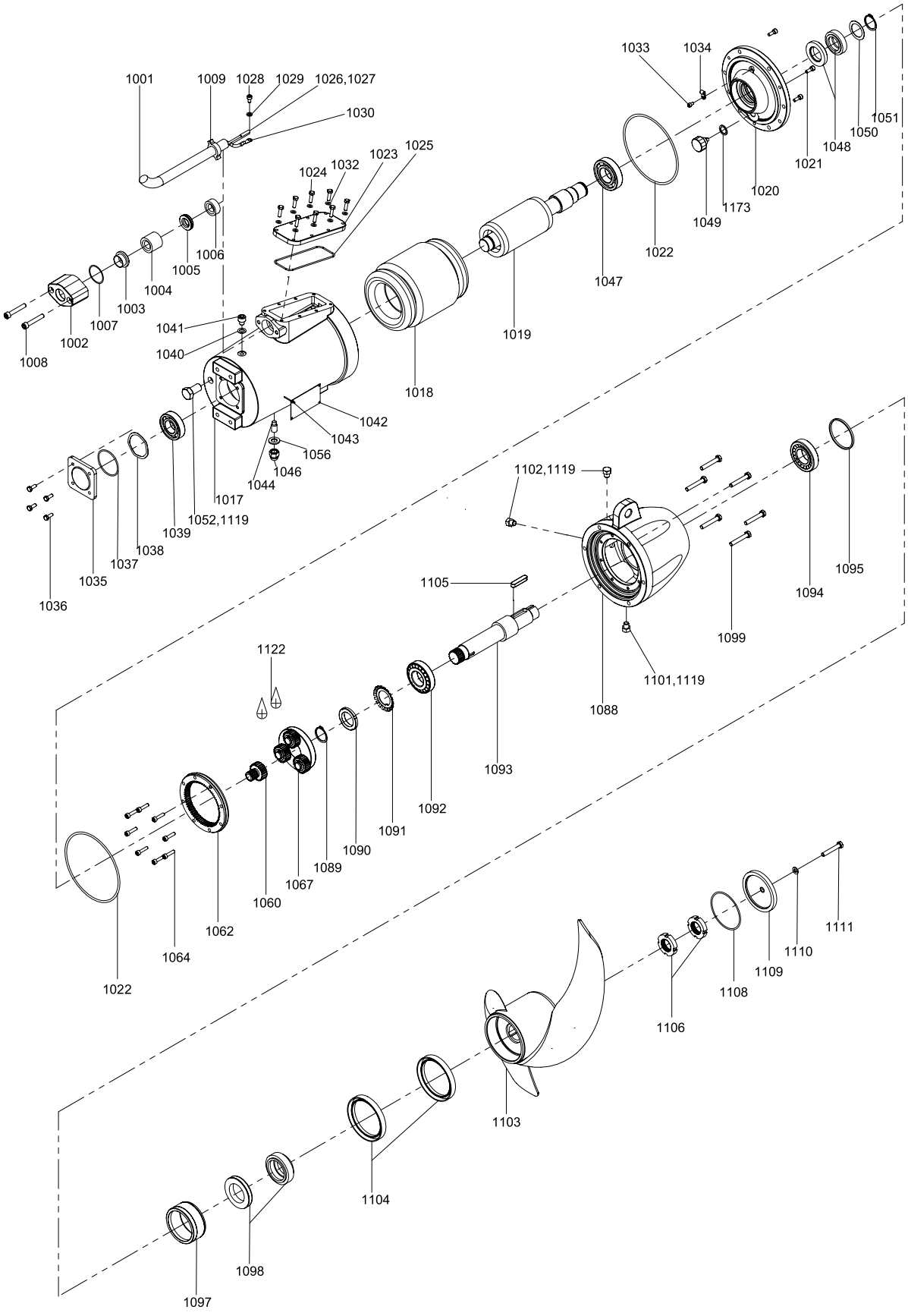

Gear

Pos.	Description						
		50 Hz	SMG.09.55 SMG.12.63 SMG.16.63	-	SMG.30.71 SMG.36.71	SMG.20.71 SMG.25.71	-
		60 Hz SI	-	SMG.09.55 SMG.12.63 SMG.16.63	-	SMG.33.71 SMG.38.71 SMG.40.71	SMG.20.71 SMG.25.71
		60 Hz US	-	SMG.12.22 SMG.16.25 SMG.22.25	-	SMG.44.28 SMG.55.28	SMG.27.28 SMG.34.28
		Kit No	i = 3.556	i = 4.286	i = 4.833	i = 5.600	i = 6.750
			95065513	*95065494*	*95065510*	*95066609*	*95065523*
1060	Sun wheel		1	1	1	1	1
1062	Ring gear		1	1	1	1	1
1067	Planet gear complete		1	1	1	1	1

Motor

Note: Motor kit parts are pre-assembled.

Pos.	Description	50/60 Hz	SMG.09-16	SMG.20-40
		60 Hz US	SMG.12-22	SMG.27-55
		Kit No	*95039700*	*95039701*
1002	Cable flange		1	1
1007	O-ring		1	1
1008	Cylinder head screw		2	2
1017	Motor housing		1	1
1018	Stator winded 6-pole 1.8 kW (2.4 hp)		1	-
	Stator winded 4-pole 3.6 kW (4.8 hp)		-	1
1019	Rotor with shaft 6-pole 1.8 kW (2.4 hp)		1	-
	Rotor with shaft 4-pole 3.6 kW (4.8 hp)		-	1
1020	Motor flange		1	1
1021	Cylinder head screw		3	3
1022	O-ring		2	2
1023	Terminal box cover		1	1
1024	Hexagon screw		8	8
1025	O-ring		1	1
1028	Cylinder head screw		1	1
1029	Lock washer		1	1
1033	Cylinder head screw		1	1
1034	Cable clamp		1	1
1035	Bearing cover		1	1
1036	Hexagon head screw		4	4
1037	O-ring 56.82 x 2.62		1	1
1038	Compensation disc		1	1
1039	Ball bearing		1	1
1040	Washer		1	1
1041	Cylinder head screw		1	1
1044	Set screw		1	1
1046	Nut		1	1
1047	Ball bearing		1	1
1048	Mechanical shaft seal, rotor		1	1
	Mechanical shaft seal, stator		1	1
1049	Water-in-oil sensor		1	1
1050	Shim washer		1	1

Pos.	Description	50/60 Hz	SMG.09-16	SMG.20-40
		60 Hz US	SMG.12-22	SMG.27-55
		Kit No	*95039700*	*95039701*
1051	Circlip		1	1
1052	Plug		1	1
1056	Seal washer		1	1
1173	Seal washer		1	1

Propeller

Pos.	Description	50/60 Hz	SMG.09.55	SMG.12.63	SMG.16.63	SMG.20/30/33.71	SMG.25/36/38/40.71
		60 Hz US	SMG.12.22	SMG.16.25	SMG.22.25	SMG. 27/44.28	SMG.34/55.28
		AISI 304	*95039713*	*95039715*	*95039717*	*95039719*	*95039721*
		AISI 316	*95039714*	*95039716*	*95039718*	*95039720*	*95039722*
1103	Propeller 0.9 kW (1.2 hp)		1	-	-	-	-
	Propeller 1.2 kW (1.6 hp)		-	1	-	-	-
	Propeller 1.6 kW (2.2 hp)		-	-	1	-	-
	Propeller 2.0/3.0/3.3 kW (2.7/4.4 hp)		-	-	-	1	-
	Propeller 2.5/3.6/3.8/4.0 kW (3.4/5.5 hp)		-	-	-		1
1104	Lip seal		2	2	2	2	2
1105	Parallel key		1	1	1	1	1
1106	Slotted nut		2	2	2	2	2
1108	Gasket		1	1	1	1	1
1109	Hub cover		1	1	1	1	1
1110	Washer		1	1	1	1	1
1111	Hexagon head screw		1	1	1	1	1

SMG.09-40 (50/60 Hz) and SMG.12-55 (60 Hz North America)

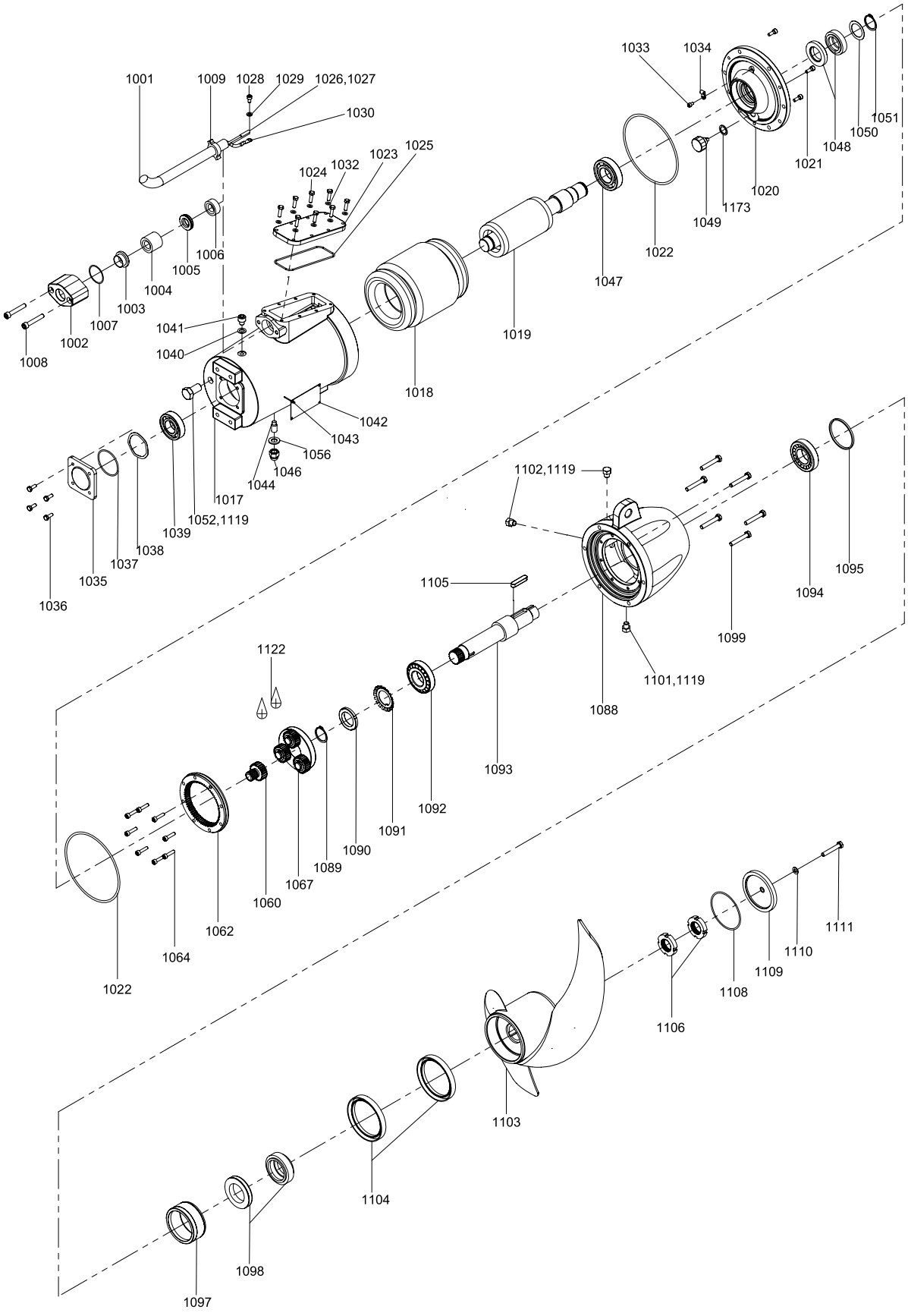

SMG.48-120 (50/60 Hz) and SMG.75-160 (60 Hz North America)

Bearing, motor

Pos.	Description/Kit No	96645955
1038	Compensation disc	1
1039	Ball bearing 6208 2RS1/C3	1
1047	Ball bearing 6010 2RS1/C3	1

Bearing, gearbox

Pos.	Description/Kit No	95065467
1090	Slotted nut; elastic stop	1
1092	Tapered roller bearing 30209	1
1094	Tapered roller bearing 32209	1

Cable (11G2.5)

Pos.	Description/Kit No	95038486	95038487
1001	Cable	10 m / 32 ft	15 m / 49 ft
1026	Cable joint	6	6
1027	Cable joint	4	4
1030	Cable shoe	1	1

Cable entry 2.5 mm^2

Pos.	Description/Kit No		95065465
1003	Cable guide		1
1004	Cable seal, large		1
1005	Thrust washer		1
1006	Cable seal, small		1
1007	O-ring		1
1008	Screw		2
1009	Cable relief		1
1025	O-ring	139.29 x 3.53	1
1026	Cable joint		10
1030	Cable shoe		7
-	Shrink tube for connections		10

Gear housing

Note: Gear housing kit parts are pre-assembled.

Pos.	Description/Kit No	95038481
1088	Gear housing	1
1089	Circlip	1
1090	Slotted nut	1
1092	Tapered roller bearing 30209	1
1093	Gear shaft	1
1094	Tapered roller bearing 32209	1
1101	Drain plug with magnet	1
1102	Plug	2
1105	Parallel key	1
1119	PTFE tape	1

Gasket kit

Pos.	Description/Kit No		95065464
1004	cable seal, large		1
1006	cable seal small		1
1007	O-ring	54.0 x 3.0	1
1022	O-ring	215.57 x 2.62	2
1025	O-ring	139.29 x 3.53	1
1037	O-ring	75.87 x 2.62	1
1048	Mechanical shaft seal, rotor		1
	Mechanical shaft seal, stator		1
1050	Shim		1
1051	Circlip		1
1108	O-ring	94.92 x 2.62	1

Radial seal

Pos.	Description/Kit No		95039131
1022	O-ring	215.59 x 2.62	1
1104	Lip seal		2
1108	O-ring	94.92 x 2.62	1
	O-ring	184.0 x 3.0	1
	O-ring	225.0 x 3.0	1
1110	Washer		1
1157	Gasket		1

Shaft seal

Pos.	Description/Kit No	95065470
1098	Mechanical shaft seal, rotor	1
	Mechanical shaft seal, stator	1

Water-in-oil sensor

Pos.	Description/Kit No	95038409
1049	Water-in-oil sensor	1
1173	Seal washer	1

Wear ring

Pos.	Description/Kit No		95037375
1022	O-ring	215.59 x 3.53	1
1097	Wear ring ceramic		1
1104	Lip seal		2
1108	O-ring	94.92 x 2.62	1
	O-ring	184.0 x 3.0	1
	O-ring	225.0 x 3.0	1
1110	Washer		1
1157	Gasket		1

SMG.48-120 (50/60 Hz) and SMG.75-160 (60 Hz North America)

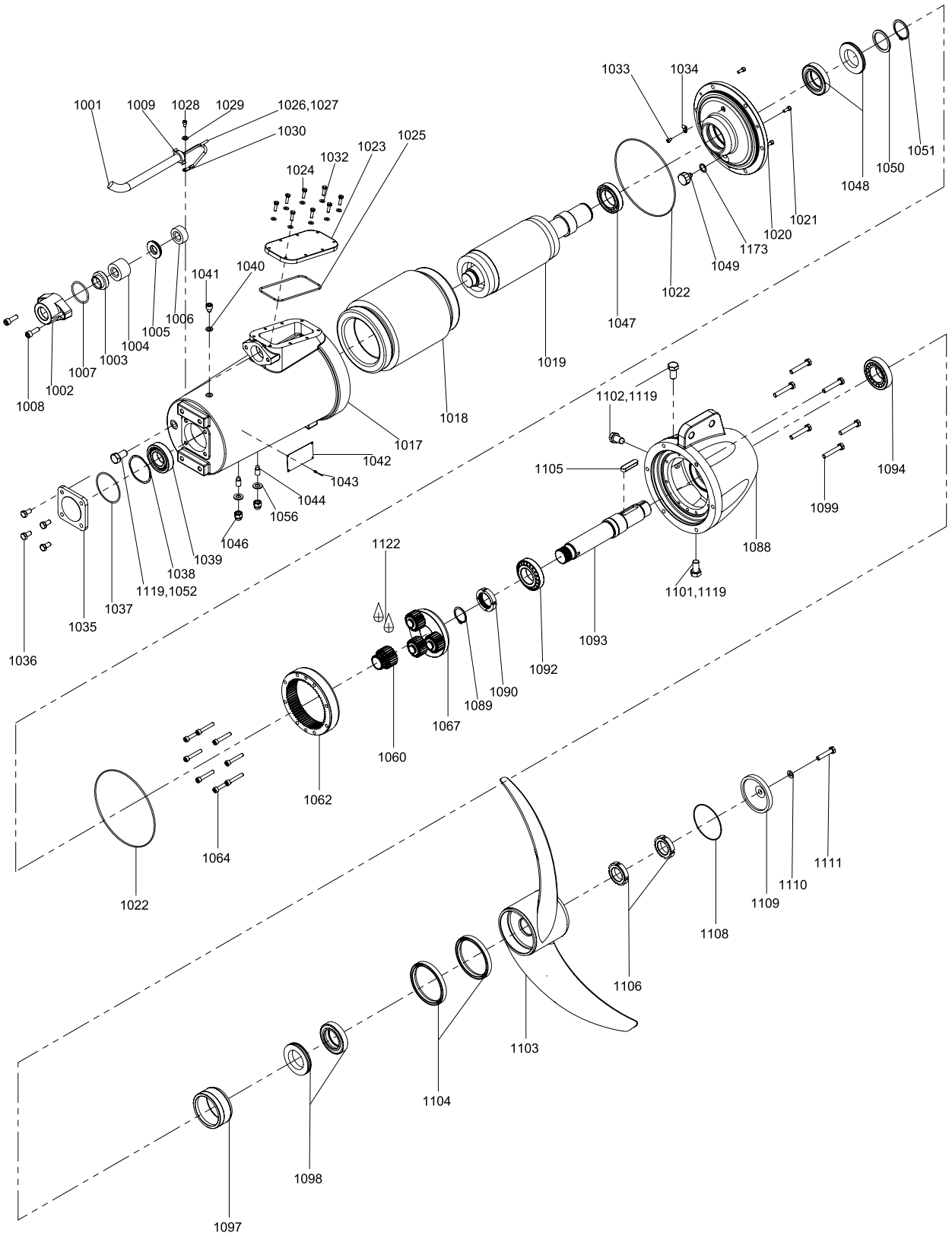

Gear

Pos.	Description				
		50 Hz	SMG.48.73 SMG.85.86 SMG.110.86	SMG.56.86 SMG.70.86	-
		60 Hz SI	-	SMG.95.86 SMG.120.86	SMG.56.86 SMG.70.86
		60 Hz US	-	SMG.130.34 SMG.160.34	SMG.75.34 SMG.95.34
		Kit No	i = 4.833	i = 5.600	i = 6.750
			95065518	*95065517*	*95065524*
1060	Sun wheel		1	1	1
1062	Ring gear		1	1	1
1067	Planet gear complete		1	1	1

Motor

Note: Motor kit parts are pre-assembled.

Pos.	Description	50/60 Hz	SMG.48-70	SMG.85-120
		60 Hz US	SMG.75-95	SMG.130-160
		Kit No	*95039702*	*95039703*
1002	Cable flange		1	1
1007	O-ring		1	1
1008	Cylinder head screw		2	2
1017	Motor housing		1	1
1018	Stator winded 4-pole 7.0 kW (9.5 hp)		1	-
	Stator winded 4-pole 13.0 kW (17.5 hp)		-	1
1019	Rotor with shaft 4-pole 7.0 kW (9.5 hp)		1	-
	Rotor with shaft 4-pole 13.0 kW (17.5 hp)		-	1
1020	Motor flange		1	1
1021	Cylinder head crew		3	3
1022	O-ring		2	2
1023	Terminal box cover		1	1
1024	Hexagon screw		8	8
1025	O-ring		1	1
1028	Cylinder head screw		1	1
1029	Lock washer		1	1
1033	Cylinder head screw		1	1
1034	Cable clamp		1	1
1035	Bearing cover		1	1
1036	Hexagon head screw		4	4
1037	O-ring		1	1
1038	Compensation disc		1	1
1039	Ball bearing 6208		1	1
1040	U-washer		1	1
1041	Cylinder head screw		1	1
1044	Set screw		2	2
1046	Nut		2	2
1047	Ball bearing 6010		1	1
1048	Mechanical shaft seal, rotor		1	1
	Mechanical shaft seal, stator		1	1
1049	Water-in-oil sensor		1	1
1050	Shim washer		1	1
1051	Circlip		1	1
1052	Plug		1	1
1056	Seal washer		2	2
1173	Seal washer		1	1

Propeller

Pos.	Description	50/60 Hz	SMG.48.73	SMG.56/85/95.86	SMG.70/110/120.86
		60 Hz US	-	SMG.75/130.34	SMG.95/160.34
		AISI 304	*95039723*	*95039725*	*95039727*
		AISI 316	*95039724*	*95039726*	*95039728*
1103	Propeller 4.8 kW (-)		1	-	-
	Propeller 5.6/8.5/9.5 kW (7.5/13.0 hp)		-	1	-
	Propeller 7.0/11.0/12.0 kW (9.5/16.0 hp)		-	-	1
1104	Lip seal		2	2	2
1105	Parallel key		1	1	1
1106	Slotted nut		2	2	2
1108	Gasket		1	1	1
1109	Hub cover		1	1	1
1110	Washer		1	1	1
1111	Screw		1	1	1

SMG.48-120 (50/60 Hz) and SMG.75-160 (60 Hz North America)

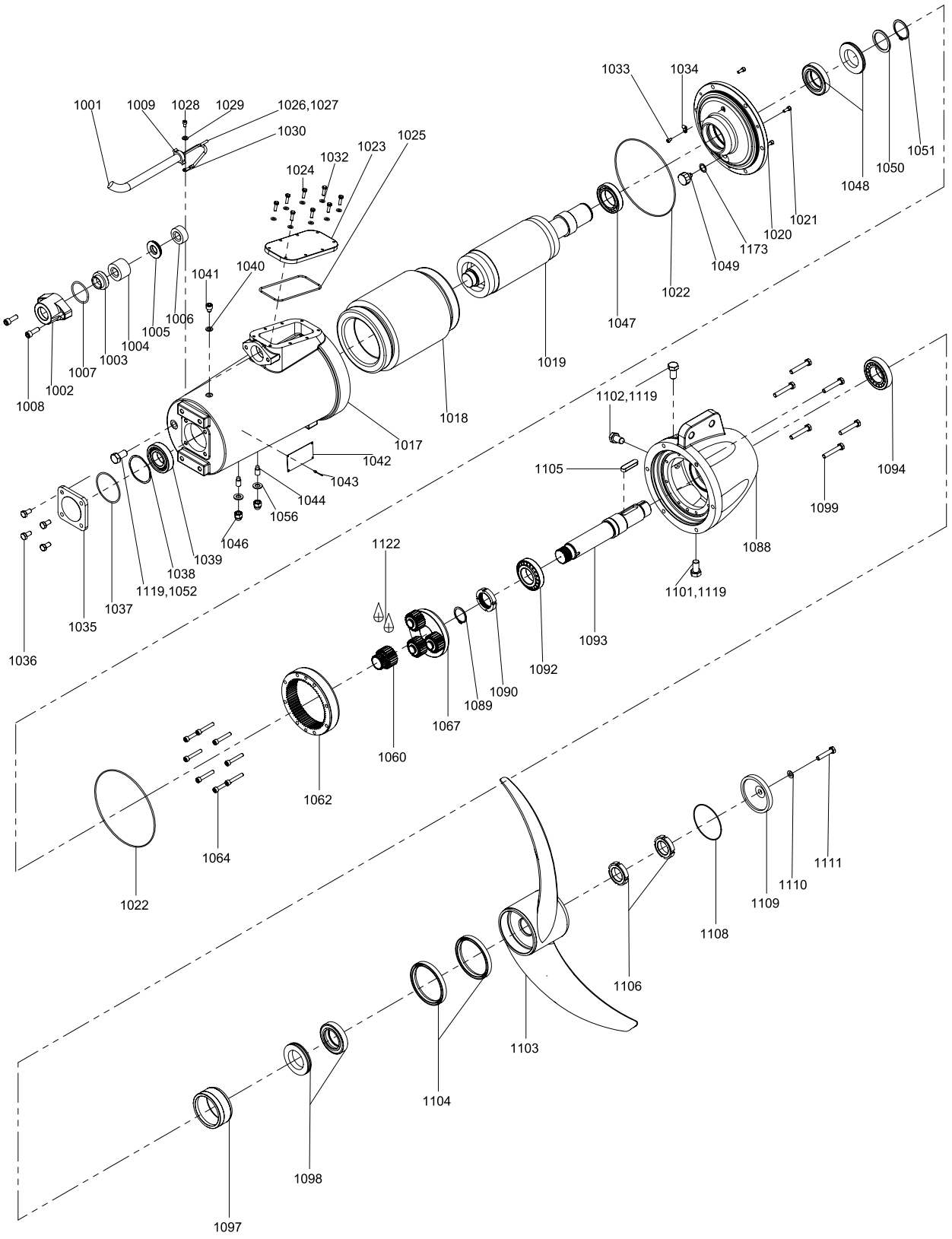

SMG.140-180 (50/60 Hz) and SMG.220 (60 Hz North America)

Bearing, motor

Pos.	Description/Kit No	*95065474*
1038	Compensation disc	1
1039	Ball bearing 6210 2RS1/C3	1
1047	Ball bearing 6210 2RS1/C3	1

Bearing, gearbox

Pos.	Description/Kit No	*95065475*
1090	Slotted nut	1
1091	Lock washer	1
1092	Tapered roller bearing 30212	1
1094	Tapered roller bearing 33212	1

Cable (7G4+4x1.0)

Pos.	Description/Kit No	*95038520*	*95038521*
1001	Cable	10 m / 32 ft	15 m / 49 ft
1026	Cable joint	6	6
1027	Cable joint	4	4
1030	Cable shoe	1	1

Cable entry 4.0 mm^2

Pos.	Description/Kit No		*95065473*
1003	Cable guide		1
1004	cable seal, large		1
1005	Thrust washer		1
1006	cable seal, small		1
1007	O-ring	54.0 x 3.0	1
1008	Screw		2
1009	Cable relief		1
1025	O-ring	139.29 x 3.53	1
1026	Cable joint		6
1027	Cable joint, small		4
1030	Cable shoe		7
-	Shrink tube for connections		10

Gear housing

Note: Gear housing kit parts are pre-assembled.

Pos.	Description/Kit No	*95038516*
1088	Gear housing	1
1090	Slotted nut	1
1091	Lock washer	1
1092	Tapered roller bearing 30212	1
1093	Gear shaft	1
1094	Tapered roller bearing 33212	1
1095	Intermediate ring	1
1101	Drain plug with magnet	1
1102	Plug	2
1105	Parallel key	1
1119	PTFE tape	1

Gasket kit

Pos.	Description/Kit No		*95065472*
1004	cable seal, large		1
1006	cable seal, small		1
1007	O-ring	54.0 x 3.0	1
1022	O-ring	253.59 x 3.53	2
1025	O-ring	139.29 x 3.53	1
1037	O-ring	91.67 x 3.53	1
1048	Mechanical shaft seal, rotor		1
	Mechanical shaft seal, stator		1
1050	Shim washer		1
1051	Circlip		1
1108	O-ring	120.2 x 3.53	1

Propeller

Pos.	Description/Kit No	50/60 Hz	SMG.140-180
		60 Hz US	SMG.220
		AISI 304	*95039729*
		AISI 316	*95039730*
1103	Propeller 18.0 kW (22 hp)		1
1104	Lip seal		2
1105	Parallel key		1
1106	Slotted nut		2
1108	Gasket		1
1109	Hub cover		1
1110	Washer		1
1111	Screw		1

Radial seal

Pos.	Description/Kit No		*95039132*
1022	O-ring	253.59 x 3.53	1
1104	Lip seal		2
1108	O-ring	120.24 x 3.53	1
	O-ring	225.0 x 3.0	1
	O-ring	94.92 x 2.62	1
1110	Washer		1

Shaft seal

Pos.	Description/Kit No	*95065478*
1095	Intermediate ring	1
1098	Mechanical shaft seal, rotor	1
	Mechanical shaft seal, stator	1

Water-in-oil sensor

Pos.	Description/Kit No	*95038409*
1049	Water-in-oil sensor	1
1173	Seal washer	1

Wear ring

Pos.	Description/Kit No		*95037376*
1022	O-ring	253.59 x 3.53	1
1097	Wear ring ceramic		1
1104	Lip seal		2
1108	O-ring	120.2 x 3.53	1
	O-ring	225.0 x 3.0	1
	O-ring	94.92 x 2.62	1
1110	Washer		1

SMG.140-180 (50/60 Hz) and SMG.220 (60 Hz North America)

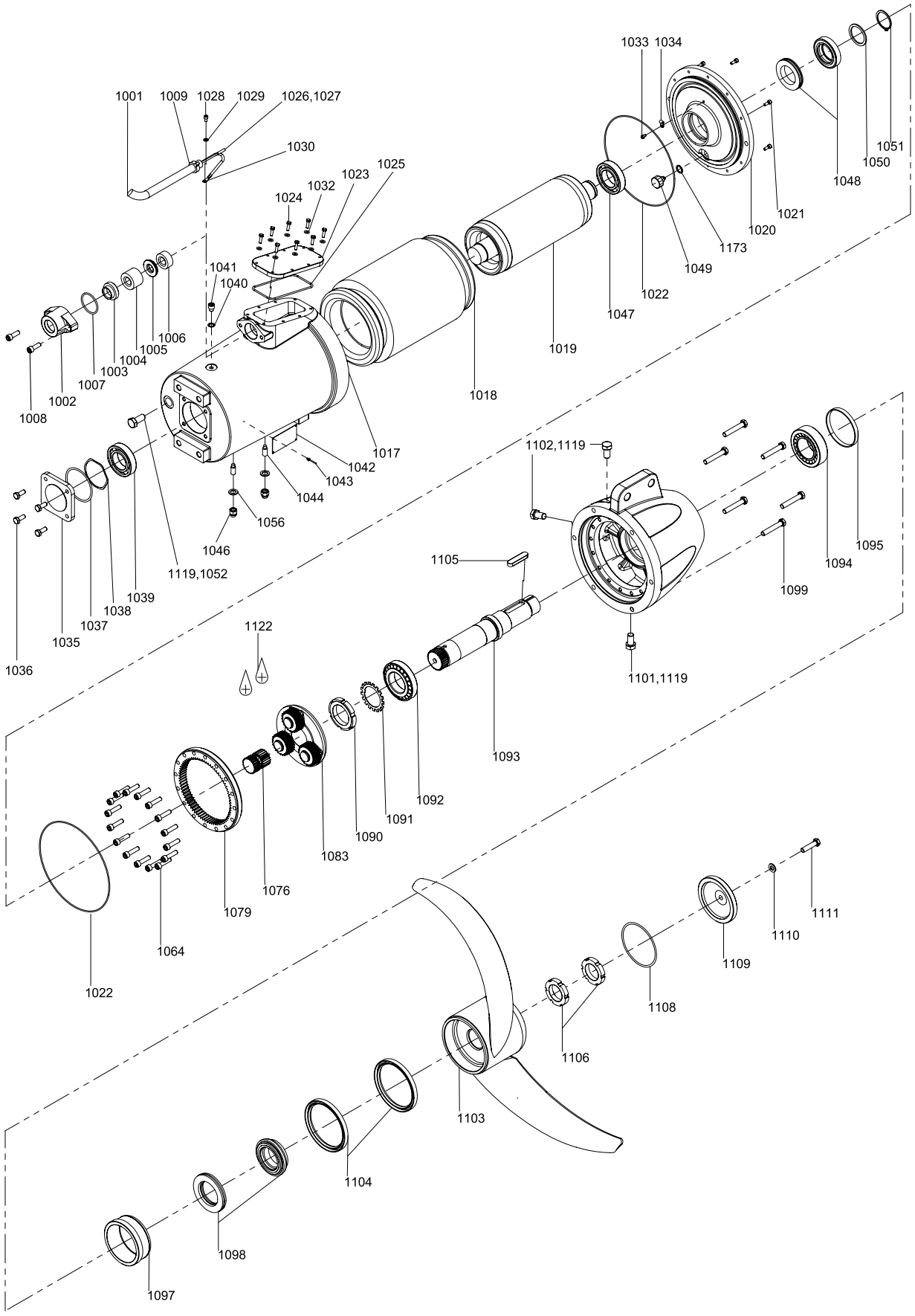

Gear

Pos.	Description	50 Hz	SMG.180.90	SMG.140.90	-
		60 Hz SI	-	-	SMG.160.90
		60 Hz US	-	-	SMG.220.35
		Kit No	i = 4.125	i = 4.571	i = 5.167
			95065496	*95038611*	*95065525*
1076	Sun wheel		1	1	1
1079	Ring gear		1	1	1
1083	Planet carrier		1	1	1

Motor

Note: Motor kit parts are pre-assembled.

Pos.	Description	50/60 Hz	SMG.140-180
		60 Hz US	SMG.220
		Kit No	*95039704*
1002	Cable flange		1
1007	O-ring		1
1008	Cylinder head screw		2
1017	Motor housing		1
1018	Stator 4-pole 24 kW (32 hp)		1
1019	Rotor with shaft 4-pole 24 kW (32 hp)		1
1020	Motor flange		1
1021	Screw		6
1022	O-ring		2
1023	Terminal box cover		1
1024	Screw		8
1025	O-ring		1
1028	Screw		1
1029	Lock washer		1
1033	Screw		1
1034	Cable clamp		1
1035	Bearing cover		1
1036	Screw		4
1037	O-ring		1
1038	Compensation disc		1
1039	Ball bearing 6210		1
1040	U-washer		1
1041	Screw		1
1044	Set screw		2
1046	Nut		2
1047	Ball bearing 6210		1
1048	Mechanical shaft seal, rotor		1
	Mechanical shaft seal, stator		1
1049	Water-in-oil sensor		1
1050	Shim		1
1051	Circlip		1
1052	Plug		1
1056	Seal washer		2
1173	Seal washer		1

SMG.140-180 (50/60 Hz) and SMG.220 (60 Hz North America)

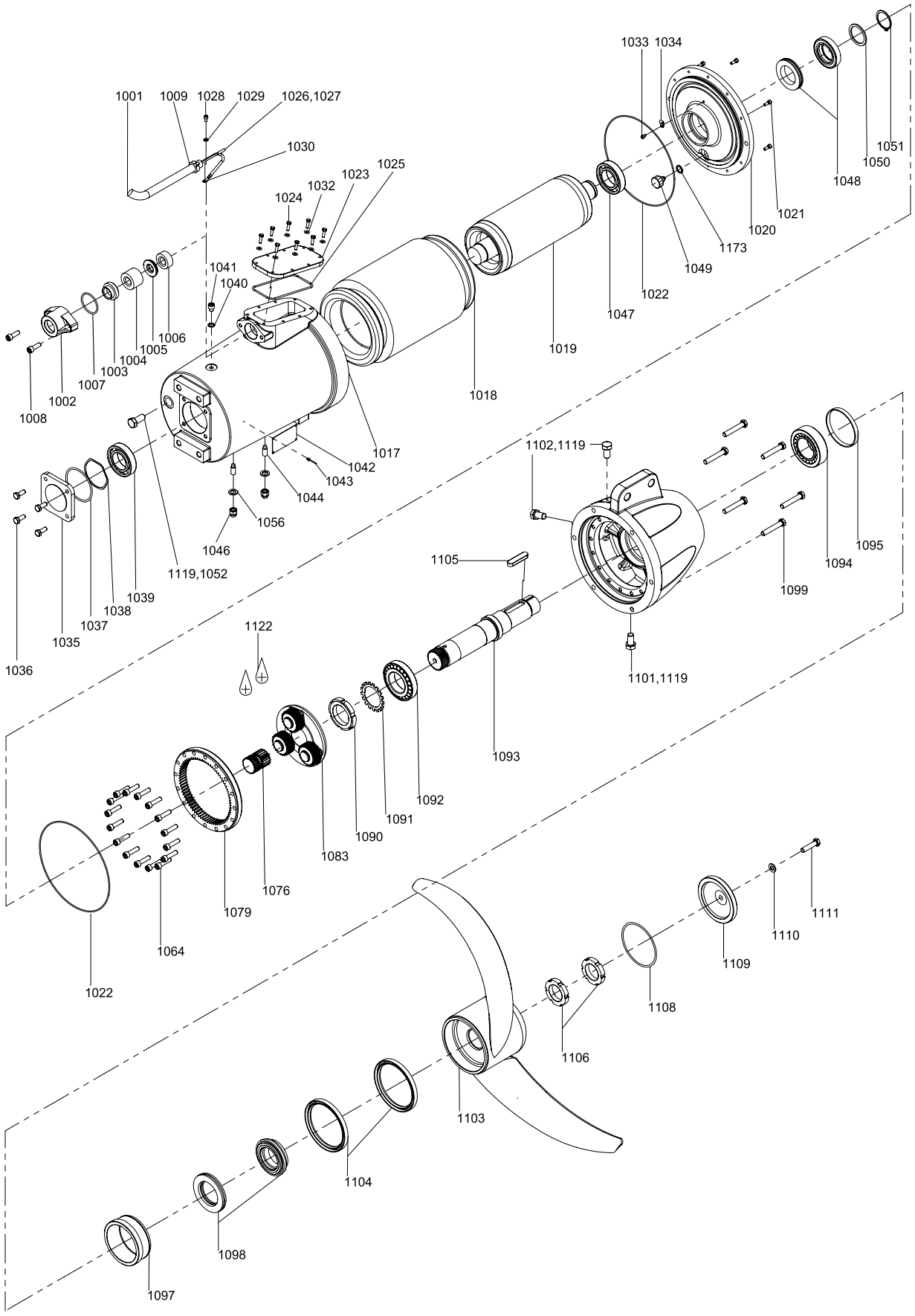

SMG.A (agriculture business)

Propeller

Pos.	Description/Kit No	50 Hz	SMG.A.45	SMG.A.75	SMG.A.80	SMG.A.130	SMG.A.110
		AISI 304	*95038464*	*95038470*	*95038476*	*95038477*	*95039491*
		AISI 316	*95038468*	*95038473*	*95038479*	*95038480*	-
1103	Propeller 4.0 kW		1	-	-	-	-
	Propeller 7.5 kW		-	1	1	-	-
	Propeller 11.0 kW		-	-	-	1	1
1104	Lip seal		2	2	2	2	2
1105	Parallel key		1	1	1	1	1
1106	Slotted nut		2	2	2	2	2
1108	O-ring		1	1	1	1	1
1109	Hub cover		1	1	1	1	1
1110	Washer		1	1	1	1	1
1111	Screw		1	1	1	1	1

Bearing, motor

Pos.	Description/Kit No	SMG.A.45	SMG.A.75-130
		95065458	*96645955*
1038	Compensation disc	1	1
1039	Ball bearing 6206 2RS	1	1
1047	Ball bearing 6207 2RS	1	1

Bearing, gearbox

Pos.	Description/Kit No	SMG.A.45	SMG.A.75-130
		95065459	*95065467*
1090	Slotted nut	1	1
1091	Lock washer	1	1
1092	Tapered roller bearing 30212	1	1
1094	Tapered roller bearing 33212	1	1

Cable (12 x 1.5 mm^2, Ø17.3)

Pos.	Description/Kit No	*95038410*	*95038411*	*95038412*
1001	Cable	10 m	15 m	25 m
1030	Cable shoe	1	1	1
1177	Cable joint	10	10	10

Cable entry 1.5 mm^2

Pos.	Description/Kit No		*95065473*
1003	Cable guide		1
1004	Cable seal, large		1
1005	Thrust washer		1
1006	Cable seal, small		1
1007	O-ring	54.0 x 3.0	1
1008	Screw		2
1009	Cable relief		1
1025	O-ring	133.97 x 3.53	1
1026	Press connector (cable)		6
	Press connector (signal)		4
1030	Cable shoe		7
-	Shrink tube for connectors		

Gasket

Pos.	Description/Kit No		*95065455*
1004	cable seal, large		1
1006	cable seal, small		1
1007	O-ring	36.22 x 1.78	1
1022	O-ring	158.42 x 2.62	2
1025	O-ring	113.97 x 2.62	1
1037	O-ring	63.22 x 1.78	1
1054	Lip seal		1
1055	Lip seal		1
1108	O-ring	85.0 x 2.5	1

Gear

Pos.	Description	50 Hz	SMG.A.45	SMG.A.75-130
		Kit No	i = 4.28	i = 4.28
			95065494	*95065495*
1060	Sun wheel		1	1
1062	Ring gear		1	1
1067	Planet carrier		1	1

Gear housing

Pos.	Description/Kit No	*95038404*
1088	Gear housing	1
1090	Slotted nut	1
1091	Lock washer	1
1092	Tapered roller bearing 30207	1
1093	Gear shaft	1
1094	Tapered roller bearing 30207	1
1101	Drain plug with magnet	1
1102	Plug	2
1105	Parallel key	1
1164	Retaining ring	1

Radial seal

Pos.	Description/Kit No		*95039130*
1104	Lip seal		2
1108	O-ring	85.0 x 2.5	1
	O-ring	105.0 x 3.0	1
	O-ring	184.0 x 3.0	1
1110	Washer		1
1157	Gasket NBR	70 D96 x 75 x 2	1
	Gasket NBR	70 D86/66 x 2	1

Shaft seal

Pos.	Description/Kit No	*95065462*
1095	Intermediate ring	1
1098	Mechanical shaft seal	1

Slotted nut

Pos.	Description/Kit No	*95038413*
1106	Slotted nut	2
1107	Lock washer	2

Wear ring

Pos.	Description/Kit No		*95037374*
1022	O-ring	158.42 x 2.62	1
1097	Wear ring ceramic		1
1104	Lip seal		2
1108	O-ring	85.0 x 2.5	1
	O-ring	105.0 x 3.0	1
	O-ring	184.0 x 3.0	1
1110	Washer		1
1157	Gasket NBR 70	96 x 75 x 2	1
	Gasket NBR 65	98 x 80 x 6	1

SMG.A.45

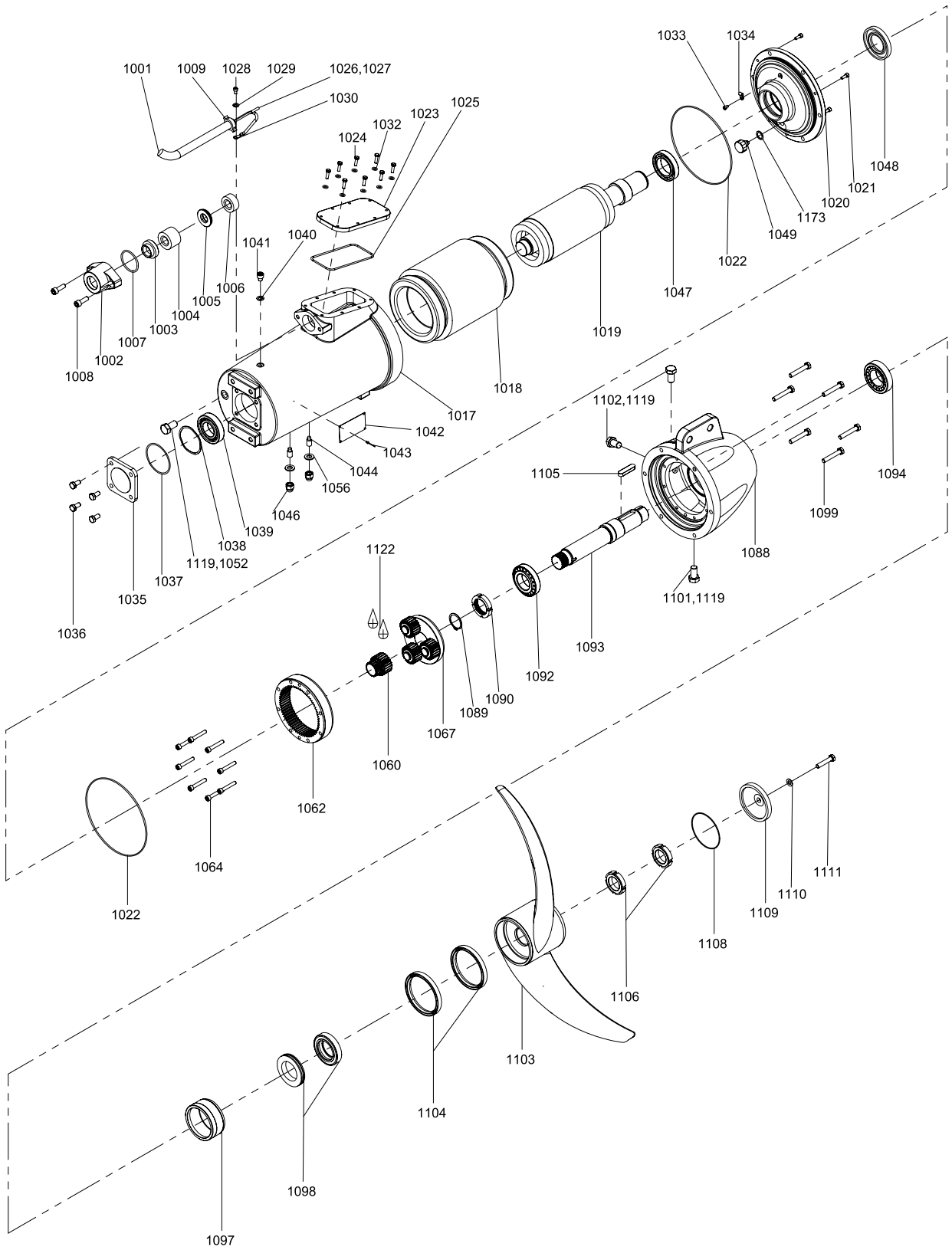
1001
1009
1028
1029
1026,1027
1030
1025
1023
1032
1024
1033
1034
1048
1021
1020
1173
1049
1022
1047
1019
1018
1017
1042
1043
1044
1056
1046
1039
1038
1119,1052
1037
1035
1036
1008
1002
1007
1003
1004
1005
1006
1041
1040
1102,1119
1105
1094
1099
1088
1101,1119
1093
1092
1090
1089
1067
1060
1062
1064
1022
1122
1111
1110
1109
1108
1106
1103
1104
1098
1097
TM070287

SMG.A.75-130

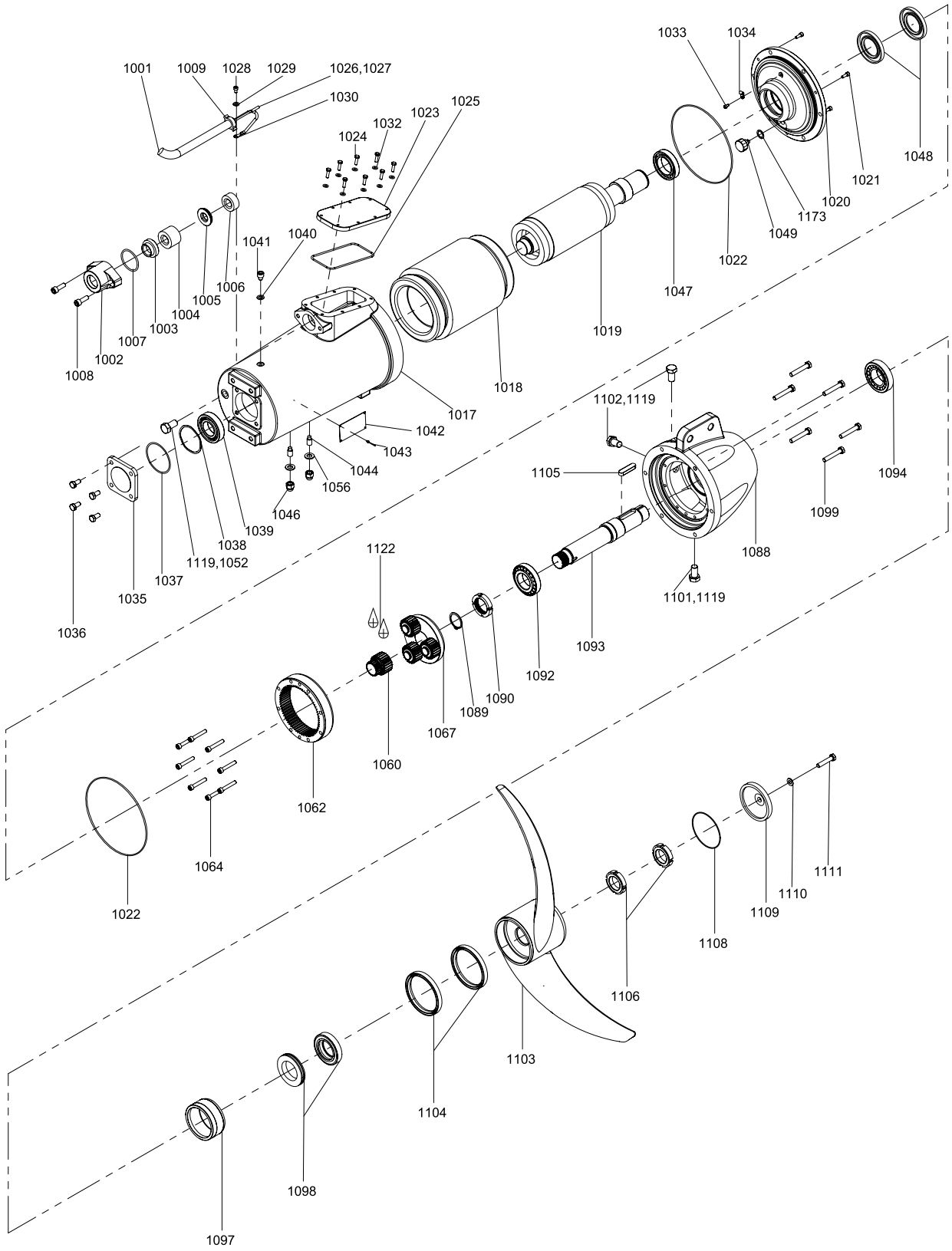
1001
1009
1028
1029
1026,1027
1030
1025
1023
1032
1024
1033
1034
1048
1021
1020
1173
1049
1022
1047
1019
1018
1017
1042
1043
1044
1056
1046
1039
1038
1119,1052
1037
1035
1036
1041
1040
1006
1005
1004
1003
1007
1002
1008
1102,1119
1105
1094
1099
1088
1101,1119
1093
1092
1090
1089
1067
1060
1062
1064
1022
1122
1111
1110
1109
1108
1106
1103
1104
1098
1097
TM070288

SMG.H (heavy-duty)

Gear

Pos.	Description/ Kit No	50 Hz					60 Hz
		SMG.H.50	SMG.H.80	SMG.H.110	SMG.H.150	SMG.H.185	SMG.H.90
		i = 5.6	i = 5.6	i = 5.6	i = 4.57	i = 4.12	i = 5.6
		95065517	*95065518*	*95065495*	*95038611*	*95065496*	*95065517*
1060	Sun wheel	1	1	1	1	1	1
1062	Ring gear	1	1	1	1	1	1
1067	Planet gear	1	1	1	1	1	1

Propeller

Pos.	Description/Kit No		50 Hz		60 Hz
			SMG.H.50/80/110	SMG.H.150/185	SMG.H.90
		AISI 304	*95039491*	*95038509*	*95039491*
		AISI 306	n/a	*95038511*	n/a
1103	Propeller		1	1	1
1104	Lip seal		2	2	2
1105	Parallel key		1	1	1
1106	Slotted nut		2	2	2
1108	Gasket NBR	65 D135/113 x 12	1	1	1
1109	Hub cover		1	1	1
1110	Washer		1	1	1
1111	Screw		1	1	1

Bearing, motor

For SMG.H.50/80/110

Pos.	Description/Kit No	*96645955*
1038	Compensation disc	1
1039	Ball bearing 6208 2RS	1
1047	Ball bearing 6010 2RS	1

For SMG.H.150/185

Pos.	Description/Kit No	*95065474*
1038	Washer	1
1039	Ball bearing 6210 2RS	2

Bearing, gearbox

Pos.	Description/Kit No	SMG.H.50 SMG.H.80 SMG.H.110	SMG.H.150 SMG.H.185
		95065467	*95065475*
1090	Slotted nut	1	1
1091	Washer	1	1
1092	Tapered roller bearing 30209	1	1
1094	Tapered roller bearing 33209	1	1

Cable flange

Pos.	Description/Kit No		*95036338*
1002	Cable, complete		1
1007	O-ring	54.0 x 3.0	1
1025	O-ring	139.29 x 3.53	1
1026	Cable press connector		4
1030	Cable end connector		6

Pos.	Description/Kit No		*95036338*
-	Shrink tube	(D6.4-3.2)	-
-	Shrink tube	(D12.7-6.4)	-
-	Shrink tube	(D25.4-12.7)	-
-	Paint, modified epoxy, base (part A)		-
-	Paint, modified epoxy, curing agent (part B)		1

Gear housing and hub cover

Pos.	Description/Kit No	SMG.H.50 SMG.H.80 SMG.H.110	SMG.H.150 SMG.H.185
		95039319	*95039320*
1088	Gear housing	1	1
1109	Hub cover	1	1

Shaft seal

Pos.	Description/Kit No	SMG.H.50 SMG.H.80 SMG.H.110	SMG.H.150 SMG.H.185
		95065470	*95065478*
1095	Distance ring	-	1
1098	Mechanical shaft seal, rotor	1	1
	Mechanical shaft seal, stator	1	1

WIO sensor

Pos.	Description/Kit No	*95038409*
1049	WIO sensor	1
1173	Seal washer	1
-	Contactor	2

SMG.H.50-110

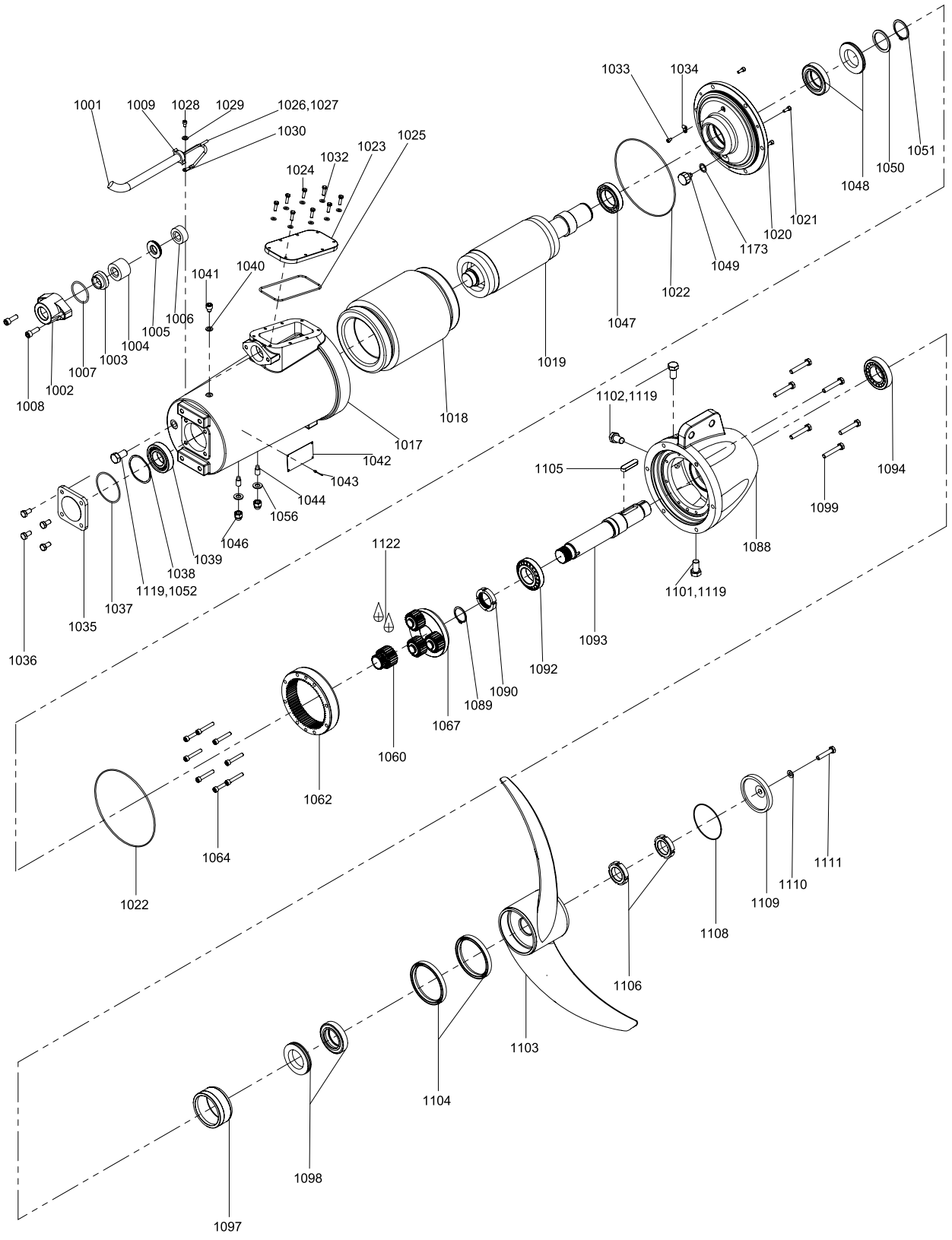
1001
1009
1028
1029
1026,1027
1030
1025
1023
1032
1024
1033
1034
1051
1050
1048
1021
1020
1173
1049
1022
1047
1019
1018
1017
1042
1043
1044
1056
1046
1039
1038
1119,1052
1037
1035
1036
1041
1040
1006
1005
1004
1003
1007
1002
1008
1102,1119
1105
1094
1099
1088
1101,1119
1093
1092
1090
1089
1067
1060
1062
1122
1064
1022
1097
1098
1104
1103
1106
1108
1109
1110
1111
TM062484

SMG.H.150-185

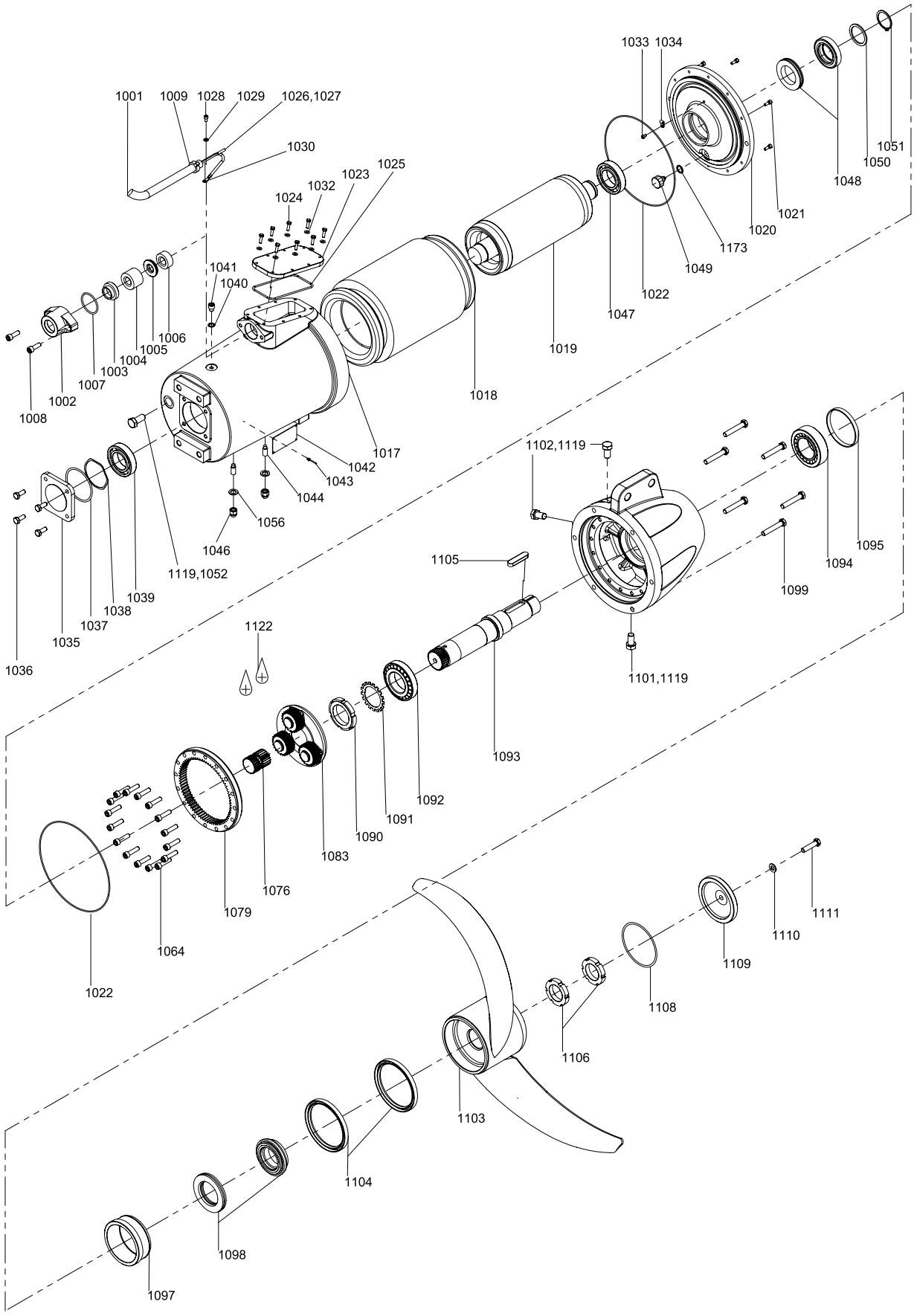
1001
1009
1028
1029
1026,1027
1030
1025
1023
1032
1024
1033
1034
1051
1050
1048
1021
1020
1173
1049
1022
1047
1019
1018
1041
1040
1006
1005
1004
1003
1007
1002
1008
1017
1042
1043
1044
1056
1046
1119,1052
1039
1038
1037
1035
1036
1102,1119
1105
1095
1094
1099
1101,1119
1122
1093
1092
1091
1090
1083
1076
1079
1064
1022
1111
1110
1109
1108
1106
1103
1104
1098
1097
TM063063

Gasket

Pos.	Description/Kit No		SMG.H.50 SMG.H.80 SMG.H.110	SMG.H.150 SMG.H.185
			95065464	*95065472*
1004	Cable seal, large		1	1
1006	Cable seal, small		1	1
1007	O-ring	54.0 x 3.0	1	1
1008	O-ring	94.92 x 2.62	1	-
		120.24 x 3.53	-	1
1022	O-ring	215.57 x 2.62	2	-
		253.59 x 3.53	-	2
1025	O-ring	139.29 x 3.53	1	1
1037	O-ring	75.87 x 2.62	1	-
		91.67 x 3.53	-	1
1048	Shaft seal - rotor		1	1
	Shaft seal - stator		1	1
1050	Washer		1	1
1051	Circlip		1	1
1157	Gasket NBR 65	D106/90 x 10	1	-
		D135/113 x 12	-	1

Radial seal

Pos.	Description/Kit No		SMG.H.50 SMG.H.80 SMG.H.110	SMG.H.150 SMG.H.185
			95039131	*95039132*
1022	O-ring	215.57 x 2.62	1	-
		253.59 x 3.53	-	1
1104	Lip seal		2	2
1108	O-ring	94.92 x 2.62	1	1
	O-ring	184.0 x 3.0	1	-
		120.24 3.53	-	1
	O-ring	225.0 x 3.0	1	1
1110	Washer		1	1
1157	Gasket NBR 70	D96 x 75 x 2	1	-
	Gasket NBR 65	D106/90 x 10	1	1
	Gasket NBR 65	D135/133 x 12	-	1

Wear ring

Pos.	Description/Kit No		SMG.H.50 SMG.H.80 SMG.H.110	SMG.H.150 SMG.H.185
			95037375	*95037376*
1022	O-ring	215.57 x 2.62	1	-
		253.59 x 3.53	-	1
1097	Wear ring ceramic		1	1
1104	Lip seal		2	2
1108	O-ring	94.92 x 2.62	1	1
	O-ring	184.0 x 3.0	1	-
		120.24 x 3.53	-	1
	O-ring	225.0 x 3.0	1	1
1110	Washer		1	1
1157	Gasket NBR 65	D135/113 x 12	1	1
	Gasket NBR 65	D106/90 x 10	-	1
	Gasket NBR 70	D96 x 75 x 2	1	-

SMG.H.50-110

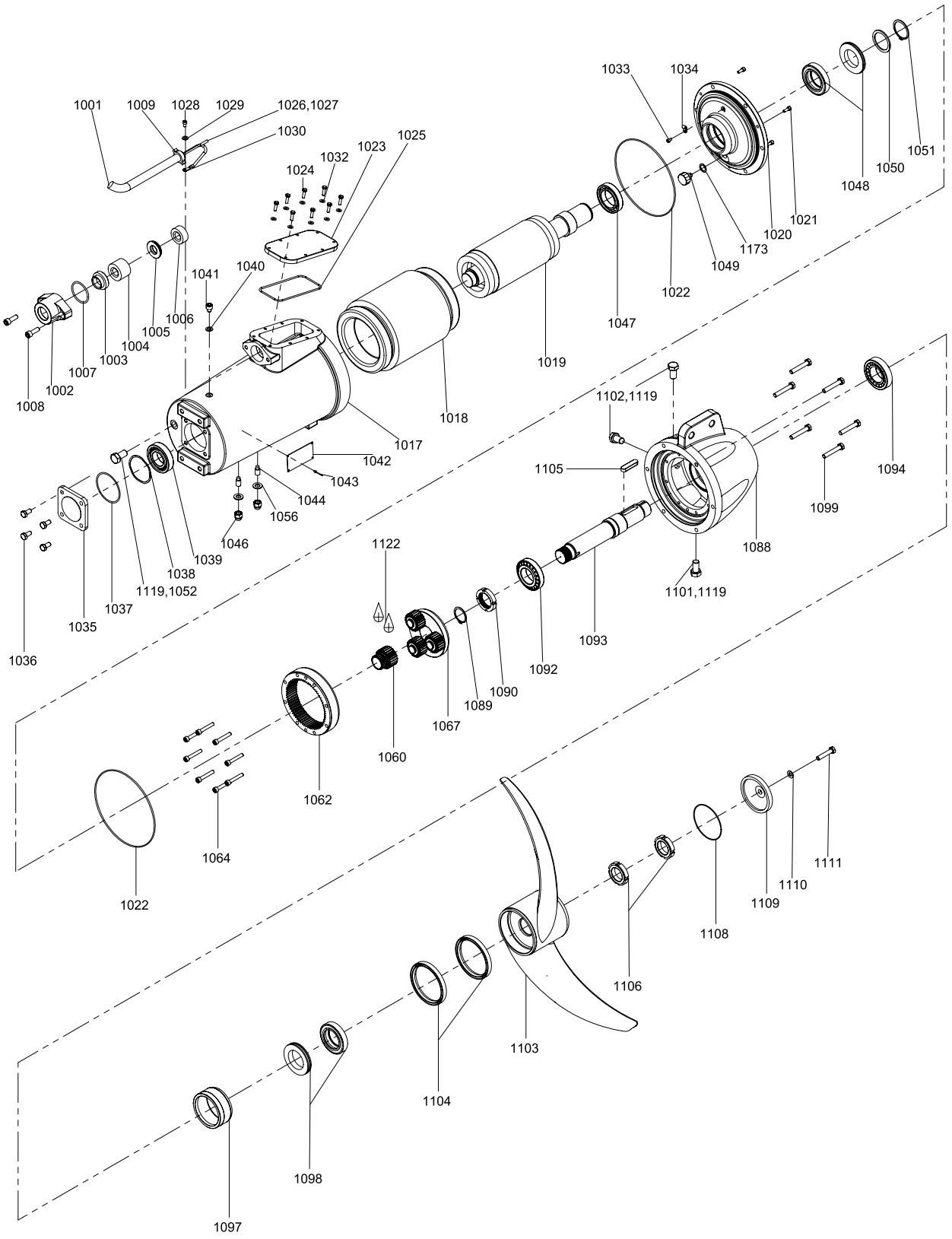
1001
1009
1028
1029
1026,1027
1030
1025
1023
1032
1024
1033
1034
1051
1050
1048
1021
1020
1173
1049
1022
1047
1019
1018
1017
1042
1043
1044
1056
1046
1039
1038
1119,1052
1037
1035
1036
1041
1040
1006
1005
1004
1003
1007
1002
1008
1102,1119
1105
1094
1099
1088
1101,1119
1093
1092
1090
1089
1067
1060
1062
1122
1064
1022
1097
1098
1104
1103
1106
1108
1109
1110
1111
TM062484

SMG.H.150-185

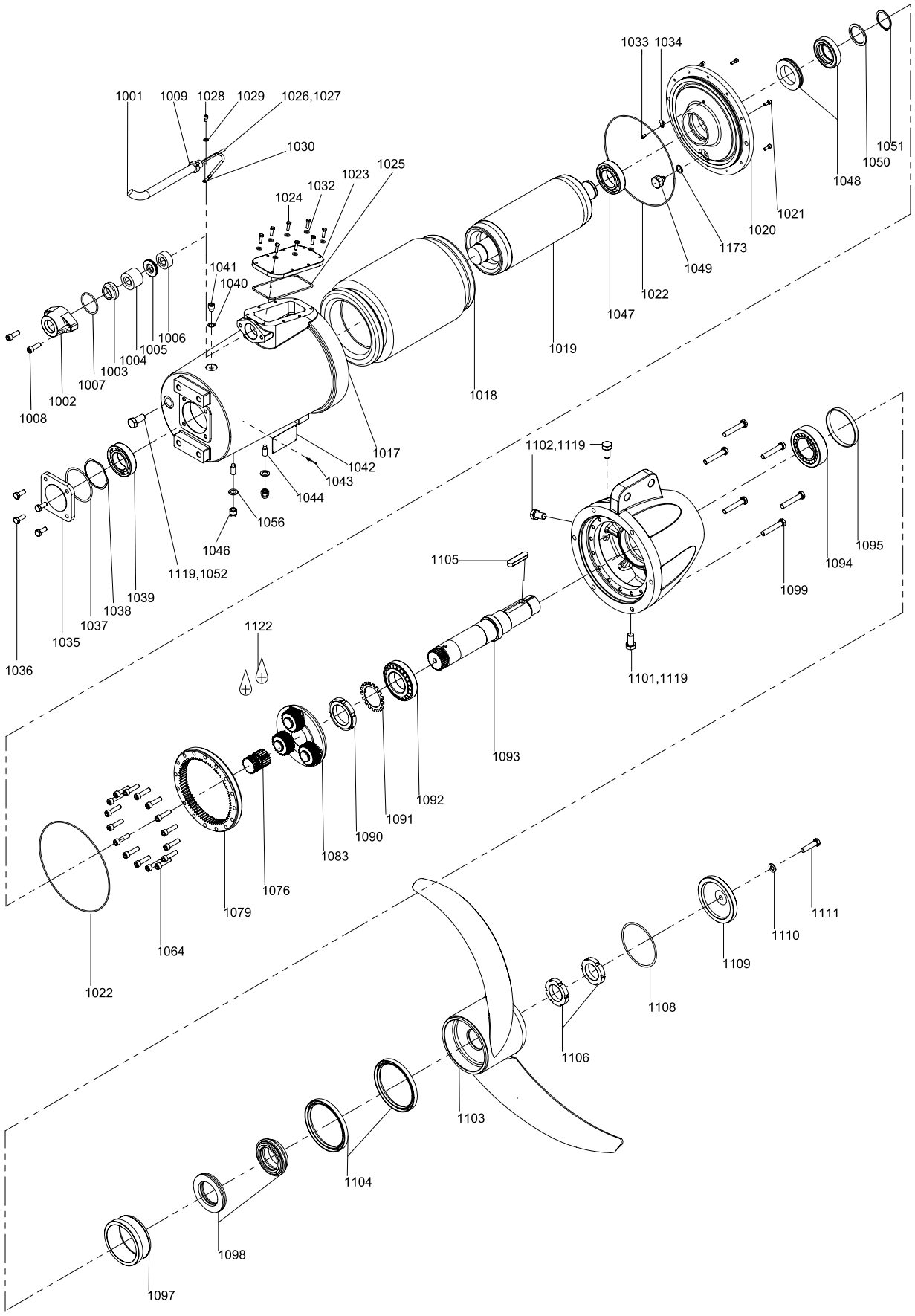
1001
1009
1028
1029
1026,1027
1030
1025
1023
1032
1024
1041
1040
1006
1005
1004
1003
1007
1002
1008
1033
1034
1051
1050
1048
1021
1020
1173
1049
1022
1047
1019
1018
1017
1042
1043
1044
1056
1046
1119,1052
1039
1038
1037
1035
1036
1102,1119
1105
1095
1094
1099
1101,1119
1122
1093
1092
1091
1090
1083
1076
1079
1064
1022
1111
1110
1109
1108
1106
1103
1104
1098
1097
TM063063

SFG

SFG.xx.130 (50/60 Hz) and SFG.xx.51 (60 Hz North America)

Bearing, motor

Pos.	Description/Kit No	*95065458*
1038	Compensation disc	1
1039	Ball bearing 6206 2RS1/C3	1
1047	Ball bearing 6207 2RS1/C3	1

Bearing, gearbox

Pos.	Description/Kit No	*95065459*
1090	Slotted nut	1
1091	Lock washer	1
1092	Tapered roller bearing 30207	1
1094	Tapered roller bearing 30207	1

Cable (11G1.5)

Pos.	Description/Kit No	*95038410*	*95038411*
1001	Cable	10 m / 32 ft	15 m / 49 ft
1026	Cable joint	6	6
1027	Cable joint	4	4
1030	Cable shoe	1	1

Cable entry 1.5 mm^2

Pos.	Description/Kit No		*95065457*
1003	Cable guide		1
1004	cable seal, large		1
1005	Thrust washer		1
1006	cable seal, small		1
1007	O-ring	39.45 x 1.78	1
1008	Cylinder head screw		2
1009	Cable relief		1
1025	O-ring	113.97 x 2.62	1
1026	Cable joint		10
1030	Cable shoe		1
-	Shrink tube for con-nections		10

Gasket kit

Pos.	Description/Kit No		*95065480*
1004	cable seal, large		1
1006	cable seal, small		1
1007	O-ring	39.45 x 1.78	1
1022	O-ring	158.42 x 2.62	3
1025	O-ring	113.97 x 2.62	1
1037	O-ring	56.82 x 2.62	1
1048	Mechanical shaft seal, rotor		1
	Mechanical shaft seal, stator		1
1050	Shim		1
1051	Circlip		1
1157	Gasket NBR	70 D86/66 x 2	-
	Gasket NBR	70 96 x 75 x 2	1

Gear housing

Note: Gear housing kit parts are pre-assembled.

Pos.	Description/Kit No	*95038404*
1088	Gear housing	1
1089	Circlip	1
1090	Slotted nut	1
1091	Lock washer	1
1092	Tapered roller bearing 30207	1
1093	Gear shaft	1
1094	Tapered roller bearing 30207	1
1095	Intermediate ring	1
1101	Drain plug with magnet	1
1102	Plug	2
1105	Parallel key	1
1119	PTFE tape	1

Propeller

Pos.	Description/Kit No	*95039731*
1103	Propeller	1
1104	Lip seal	2
1105	Parallel key	1
1106	Slotted nut	2
1108	Gasket	1
1109	Hub cover	1
1110	Washer	1
1111	Screw	1

Radial seal

Pos.	Description/Kit No		*95039130*
1073	O-ring	158.42 x 2.62	1
1104	Lip seal		2
1108	O-ring	85.0 x 2.5	1
	O-ring	105.0 x 3.0	1
	O-ring	184.0 x 3.0	1
1110	Washer		1
1157	Gasket NBR	70 D86/66 x 2	-
	Gasket NBR	70 D96 x 75 x 2	1

Shaft seal

Pos.	Description/Kit No	*95065462*
1095	Intermediate ring	1
1098	Mechanical shaft seal, rotor	1
	Mechanical shaft seal, stator	1

Water-in-oil sensor

Pos.	Description/Kit No	*95038409*
1049	Water-in-oil sensor	1
1173	Seal washer	1

Wear ring

Pos.	Description/Kit No		95037374
1022	O-ring	158.42 x 2.62	1
1097	Wear ring ceramic		1
1104	Lip seal		2
1108	O-ring	85.0 x 2.5	1
	O-ring	105.0 x 3.0	1
	O-ring	184.0 x 3.0	1
1110	Washer		1
1157	Gasket NBR	70 D86/66 x 2	1
	Gasket NBR	70 96 x 75 x 2	1

SFG.xx.130 (50/60 Hz) and SFG.xx.51 (60 Hz North America)

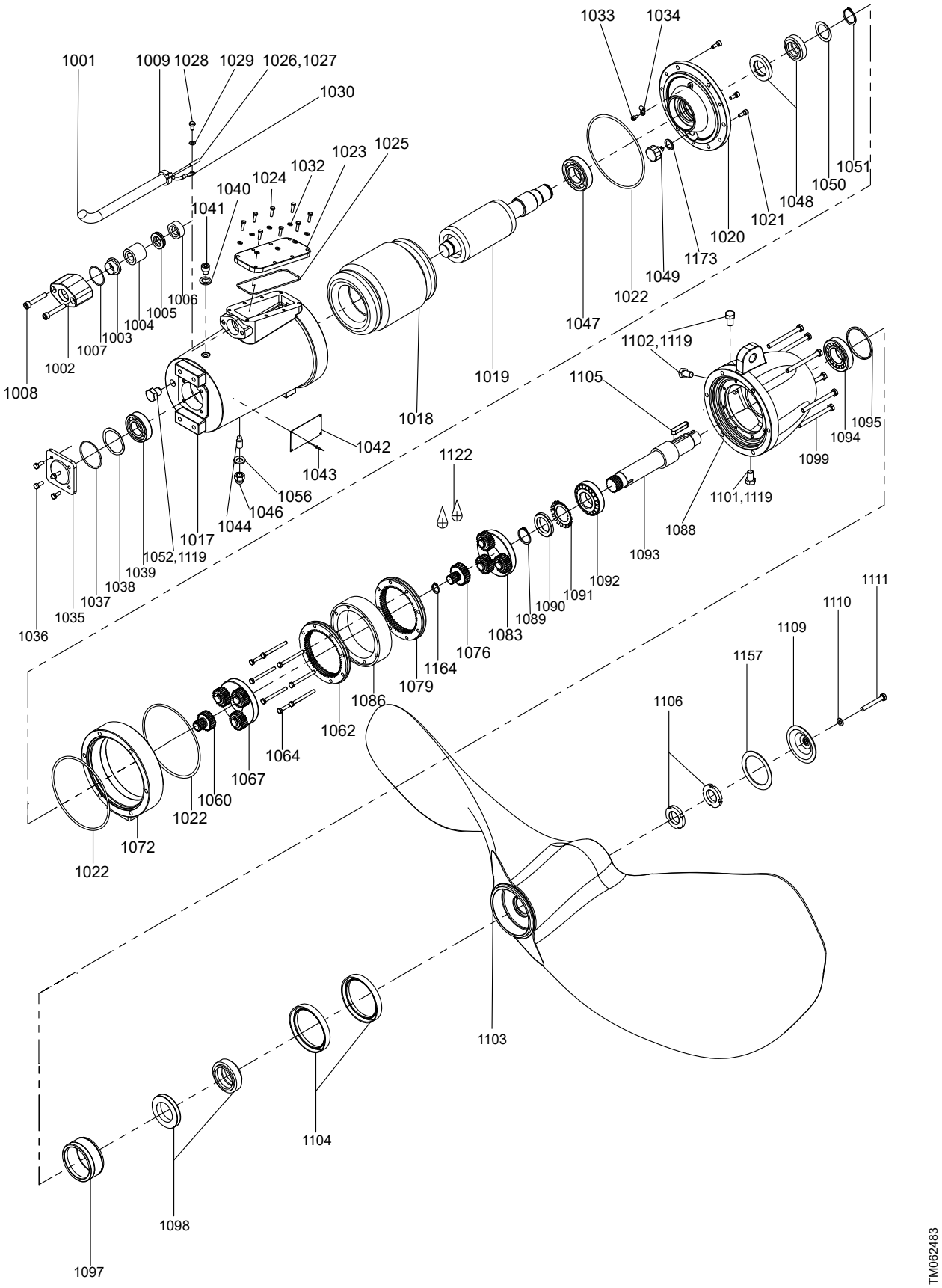

Gear

50 Hz	60 Hz SI	60 Hz US	STEP 1					STEP 2		
			i= 3.875	i = 4.286	i = 4.833	i = 5.600	i = 6.750	i = 3.556	i = 3.875	i = 4.286
SFG.07.130						*95065509*		*95038555*		
	SFG.07.130	SFG.10.51				*95065509*				*95038554*
SFG.10.130					*95065510*			*95038555*		
	SFG.10.130	SFG.14.51			*95065510*					*95039554*
SFG.14.130				*95065494*				*95038555*		
	SFG.14.130	SFG.19.51		*95065494*						*95039554*
SFG.17.130						*95065509*			*95039709*	
	SFG.17.130	SFG.23.51					*95065523*		*95039709*	
SFG.22.130						*95065509*		*95038555*		
	SFG.22.130	SFG.30.51					*95065523*	*95038555*		
SFG.27.130				*95065494*						*95038554*
	SFG.29.130	SFG.39.51				*95065509*			*95039709*	
SFG.33.130					*95065510*			*95038555*		
	SFG.33.130	SFG.44.51			*95065510*					*95038554*
SFG.36.130 [1)]			*95065512*							*95038554*
	SFG.36.130	SFG.48.51				*95065509*		*95038555*		

1) Valid for products with production code 1601 and higher (production from 2016)

Pos.	Description/Kit No	*95065512*	*95065494*	*95065510*	*95065509*	*95065523*	*95038555*	*95039709*	*95038554*
1060	Sun wheel	1	1	1	1	1	-	-	-
1062	Ring gear	1	1	1	1	1	-	-	-
1067	Planet gear complete	1	1	1	1	1	-	-	-
1076	Sun wheel	-	-	-	-	-	1	1	1
1079	Ring gear	-	-	-	-	-	1	1	1
1083	Planet carrier	-	-	-	-	-	1	1	1
1164	Circlip	-	-	-	-	-	1	1	1

Motor

Note: Motor kit parts are pre-assembled.

Pos.	Description	50/60 Hz	SFG.07-14.130	SFG.17-36.130
		60 Hz US	SFG.10-19.51	SFG.23-48.51
		Kit No	*95039700*	*95039701*
1002	Cable flange		1	1
1007	O-ring		1	1
1008	Screw		2	2
1017	Motor housing		1	1
1018	Stator winded 6-pole 1.8 kW (2.4 hp)		1	-
	Stator winded 4-pole 3.6 kW (4.8 hp)		-	1
1019	Rotor with shaft 6-pole 1.8 kW (2.4 hp)		1	-
	Rotor with shaft 4-pole 3.6 kW (4.8 hp)		-	1
1020	Motor flange		1	1
1021	Screw		3	3
1022	O-ring		2	2
1023	Terminal box cover		1	1
1024	Screw		8	8
1025	O-ring		1	1
1028	Screw		1	1
1029	Lock washer		1	1
1033	Screw		1	1
1034	Cable clamp		1	1
1035	Bearing cover		1	1
1036	Screw		4	4
1037	O-ring		1	1
1038	Compensation disc		1	1
1039	Ball bearing 6206		1	1
1040	Washer		1	1
1041	Screw		1	1
1044	Set screw		1	1
1046	Nut		1	1
1047	Ball bearing 6207		1	1
1048	Mechanical shaft seal, rotor		1	1
	Mechanical shaft seal, stator		1	1
1049	Water-in-oil sensor		1	1
1050	Shim		1	1
1051	Circlip		1	1
1052	Plug		1	1
1056	Seal washer		1	1
1173	Seal washer		1	1

SFG.xx.130 (50/60 Hz) and SFG.xx.51 (60 Hz North America)

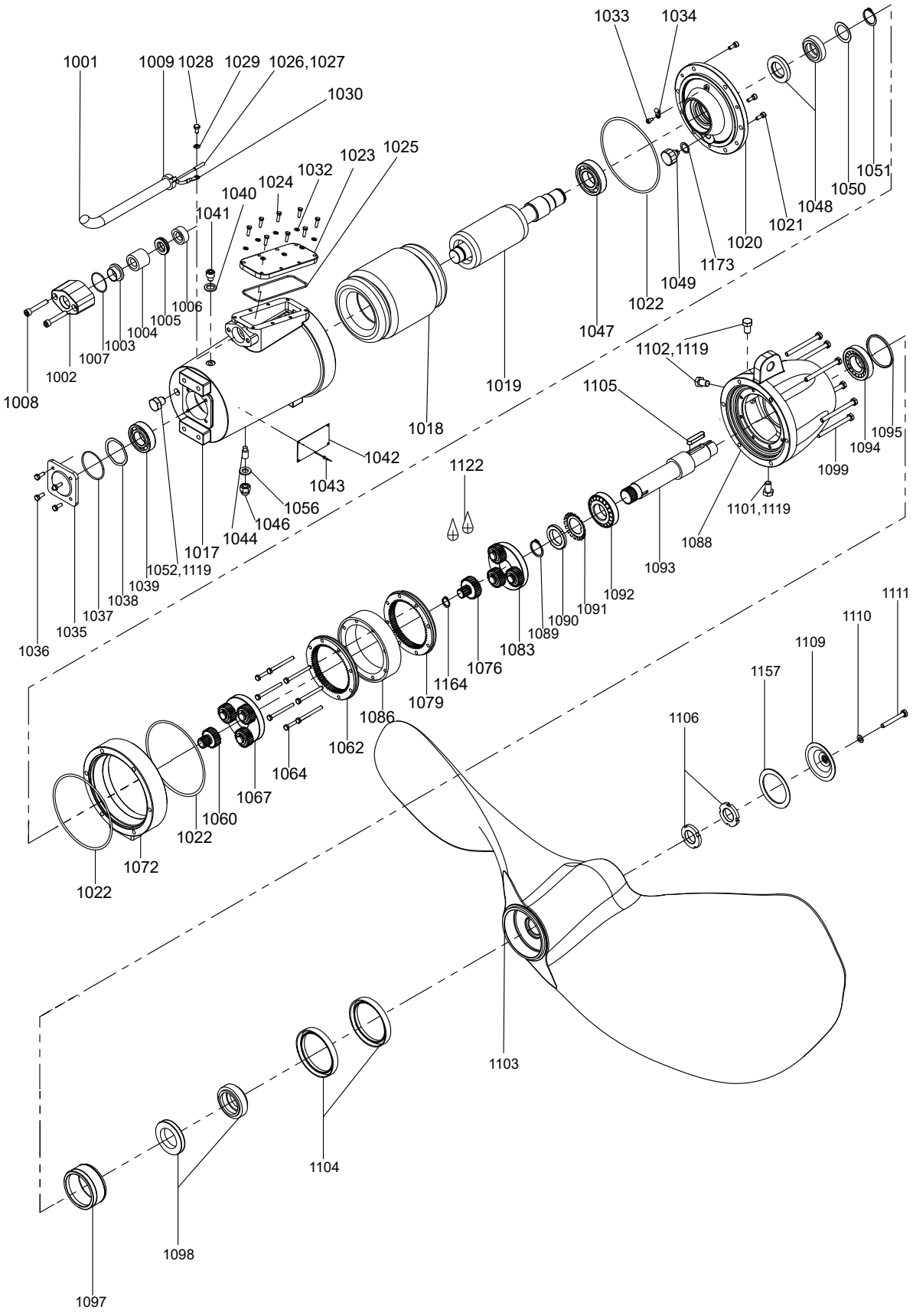

TM062483

SFG.xx.180 (50/60 Hz) and SFG.xx.71 (60 Hz North America)

Bearing, motor

Pos.	Description/Kit No	95065458
1038	Compensation disc	1
1039	Ball bearing 6206 2RS1/C3	1
1047	Ball bearing 6207 2RS1/C3	1

Bearing, gearbox

Pos.	Description/Kit No	95065467
1090	Slotted nut; elastic stop	1
1092	Tapered roller bearing 30209	1
1094	Tapered roller bearing 32209	1

Cable (11G1.5)

Pos.	Description/Kit No	95038410	95038411
1001	Cable	10 m / 32 ft	15 m / 49 ft
1026	Cable joint	6	6
1027	Cable joint	4	4
1030	Cable shoe	1	1

Cable entry 1.5 mm^2

Pos.	Description/Kit No		95065457
1003	Cable guide		1
1004	cable seal, large		1
1005	Thrust washer		1
1006	cable seal, small		1
1007	O-ring	39.45 x 1.78	1
1008	Cylinder head screw		2
1009	Cable relief		1
1025	O-ring	113.97 x 2.62	1
1026	Cable joint		10
1030	Cable shoe		1
-	Shrink tube for connections		10

Gasket kit

Pos.	Description/Kit No		95065483
1004	cable seal, large		1
1006	cable seal, small		1
1007	O-ring	39.45 x 1.78	1
1022	O-ring	158.42 x 2.62	2
1025	O-ring	113.97 x 2.62	1
1037	O-ring	56.82 x 2.62	1
1048	Mechanical shaft seal, rotor		1
	Mechanical shaft seal, stator		1
1050	Shim washer		1
1051	Circlip		1
1073	O-ring	215.57 x 2.62	1
1157	Gasket NBR	70 96 x 75 x 2	1

Gear housing

Note: Gear housing kit parts are pre-assembled.

Pos.	Description/Kit No	95038481
1088	Gear housing	1
1089	Circlip	1
1090	Slotted nut	1
1092	Tapered roller bearing 30209	1
1093	Gear shaft	1
1094	Tapered roller bearing 32209	1
1101	Drain plug with magnet	1
1102	Plug	2
1105	Parallel key	1
1119	PTFE tape	3

Propeller

Pos.	Description	50/60 Hz	SFG.07-29.180	SFG.32-40.180
		60 Hz US	SFG.10-39.71	SFG.47-55.71
		Kit No	2 blades	3 blades
			95039732	95039733
1104	Lip seal		2	2
1105	Parallel key		1	1
1106	Slotted nut		2	2
1109	Hub cover		1	1
1110	Washer		1	1
1111	Screw		1	1
1112	Hub (2 blades)		1	-
	Hub (3 blades)		-	1
1115	Screw		4	6
1157	Gasket		1	1
1159	Washer		8	12
1160	Nut		4	6
1161	Screw		2	3
1162	Propeller blade type ∅1800		2	3

Radial seal

Pos.	Description/Kit No		95039131
1073	O-ring	215.57 x 2.62	1
1104	Lip seal		2
1108	O-ring	94.92 x 2.62	1
	O-ring	184.0 x 3.0	1
	O-ring	225.0 x 3.0	1
1110	Washer		1
1157	Gasket NBR	70 96 x 75 x 2	1

Shaft seal

Pos.	Description/Kit No	95065470
1098	Mechanical shaft seal, rotor	1
	Mechanical shaft seal, stator	1

Water-in-oil sensor

Pos.	Description/Kit No	95038409
1049	Water-in-oil sensor	1
1173	Seal washer	1

Wear ring

Pos.	Description/Kit No		95037375
1073	O-ring	215.57 x 2.62	1
1097	Wear ring ceramic		1
1104	Lip seal		2
1108	O-ring	94.92 x 2.62	1
	O-ring	184.0 x 3.0	1
	O-ring	225.0 x 3.0	1
1110	Washer		1
1157	Gasket NBR	70 96 x 75 x 2	1

SFG.xx.180 (50/60 Hz) and SFG.xx.71 (60 Hz North America)

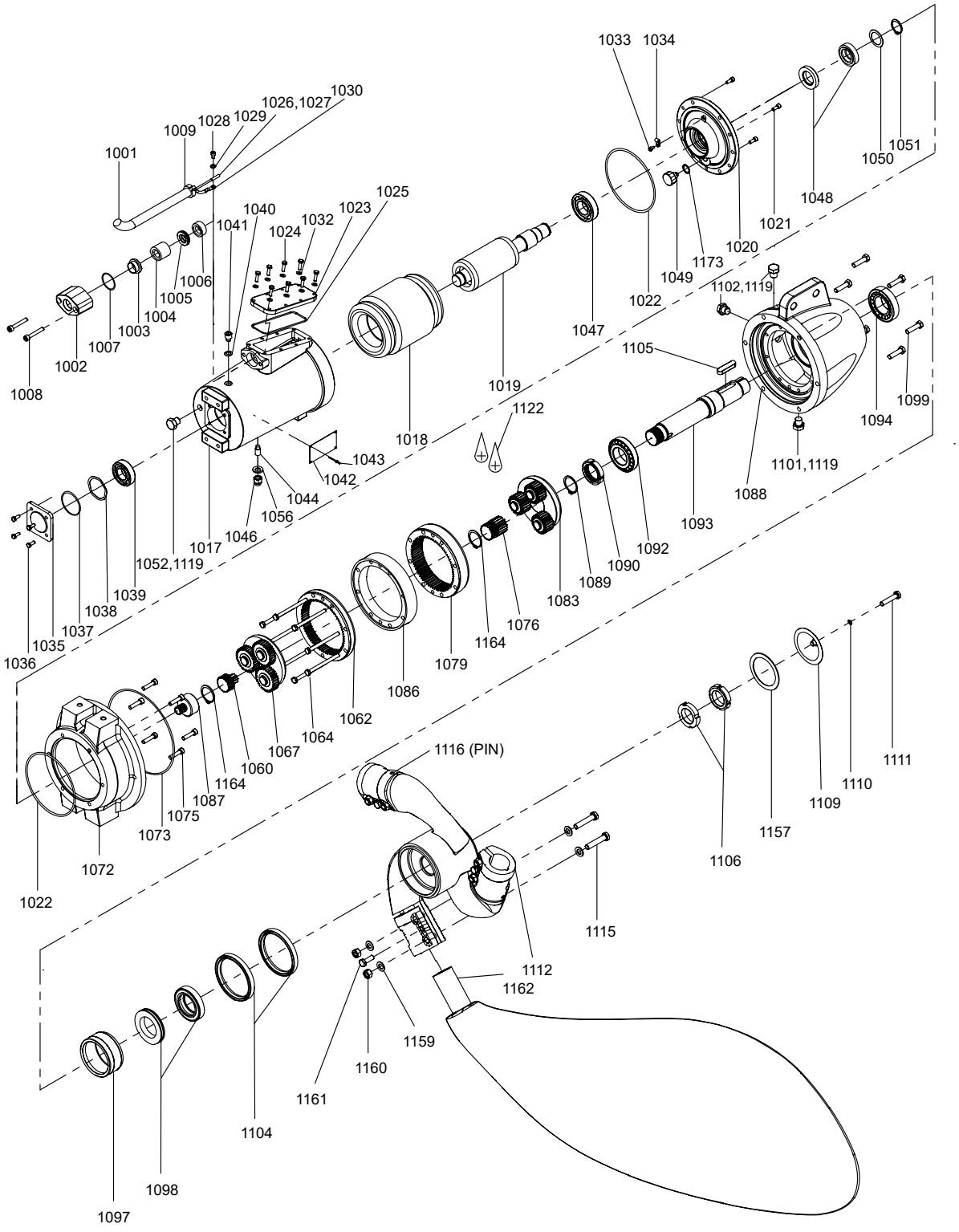

Gear

50 Hz	60 Hz SI	60 Hz US	STEP 1			STEP 2			
			i = 5.600	i = 6.750	i = 8.667	i = 3.556	i = 3.875	i = 4.286	i = 4.833
SFG.07.180					*95038581*	*95038582*			
	SFG.07.180	SFG.10.71			*95038581*			*95038583*	
SFG.10.180			*95039711*						*95038584*
	SFG.10.180	SFG.14.71		*95039710*					*95038584*
SFG.14.180				*95039710*		*95038582*			
	SFG.14.180	SFG.19.71		*95039710*				*95038583*	
SFG.17.180					*95038581*		*95039712*		
	SFG.17.180	SFG.23.71			*95038581*				*95038584*
SFG.22.180					*95038581*	*95038582*			
	SFG.22.180	SFG.30.71			*95038581*			*95038583*	
SFG.26.180				*95039710*				*95038583*	
	SFG.29.180	SFG.39.71			*95038581*		*95039712*		
SFG.32.180				*95039710*				*95038583*	
	SFG.35.180	SFG.47.71			*95038581*		*95039712*		
SFG.36.180			*95039711*						*95038584*
	SFG.38/40.180	SFG.55.71		*95039710*					*95038584*

Pos.	Description/Kit No	*95039711*	*95039710*	*95038581*	*95038582*	*95039712*	*95038583*	*95038584*
1060	Sun wheel	1	1	1	-	-	-	-
1062	Ring gear	1	1	1	-	-	-	-
1067	Planet gear complete	1	1	1	-	-	-	-
1076	Sun wheel	-	-	-	1	1	1	1
1079	Ring gear	-	-	-	1	1	1	1
1083	Planet carrier	-	-	-	1	1	1	1
1087	Gear coupling	1	1	1	-	-	-	-
1164	Circlip	1	1	1	1	1	1	1

Motor

Note: Motor kit parts are pre-assembled.

Pos.	Description	50/60 Hz	SFG.07-16.180	SFG.17-40.180
		60 Hz US	SFG.10-22.71	SFG.23-55.71
		Kit No	*95039700*	*95039701*
1002	Cable flange		1	1
1007	O-ring		1	1
1008	Screw		2	2
1017	Motor housing		1	1
1018	Stator winded 6-pole 1.8 kW (2.4 hp)		1	-
	Stator winded 4-pole 3.6 kW (4.8 hp)		-	1
1019	Rotor with shaft 6-pole 1.8 kW (2.4 hp)		1	-
	Rotor with shaft 4-pole 3.6 kW (4.8 hp)		-	1
1020	Motor flange		1	1
1021	Screw		3	3
1022	O-ring		2	2
1023	Terminal box cover		1	1
1024	Screw		8	8
1025	O-ring		1	1
1028	Screw		1	1
1029	Lock washer		1	1
1033	Screw		1	1
1034	Cable clamp		1	1
1035	Bearing cover		1	1
1036	Screw		4	4
1037	O-ring		1	1
1038	Compensation disc		1	1
1039	Ball bearing 6206		1	1
1040	U-washer		1	1
1041	Screw		1	1
1044	Set screw		1	1
1046	Nut		1	1
1047	Ball bearing 6207		1	1
1048	Mechanical shaft seal, rotor		1	1
	Mechanical shaft seal, stator		1	1
1049	Water-in-oil sensor		1	1
1050	Shim		1	1
1051	Retaining ring		1	1
1052	Plug		1	1
1056	Seal washer		1	1
1173	Seal washer		1	1

SFG.xx.180 (50/60 Hz) and SFG.xx.71 (60 Hz North America)

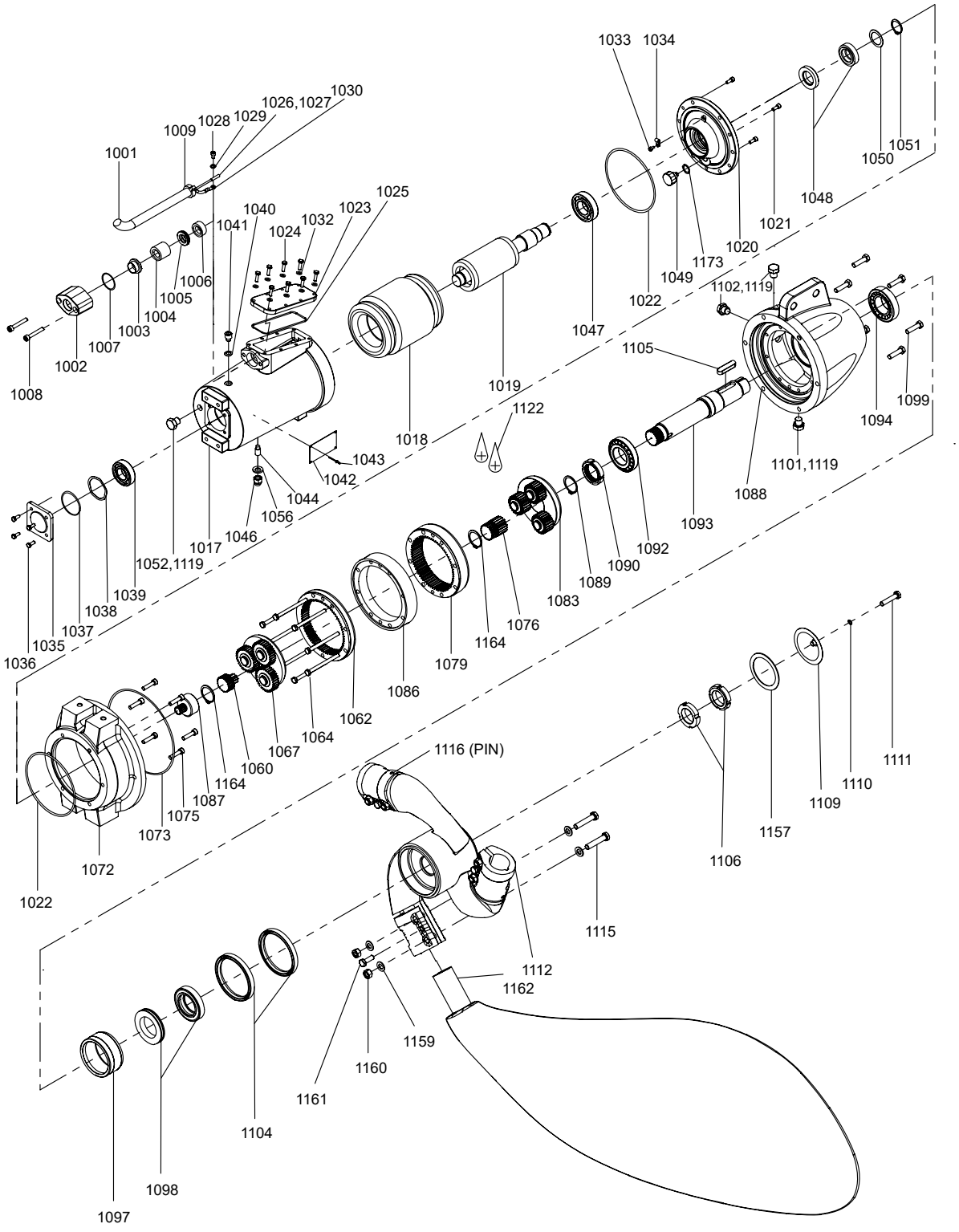

SFG.xx.230 (50/60 Hz) and SFG.xx.91 (60 Hz North America)

Bearing, motor

Pos.	Description/Kit No	95065458
1038	Compensation disc	1
1039	Ball bearing 6206 2RS1/C3	1
1047	Ball bearing 6207 2RS1/C3	1

Bearing, gearbox

Pos.	Description/Kit No	95065467
1090	Slotted nut; elastic stop	1
1092	Tapered roller bearing 30209	1
1094	Tapered roller bearing 32209	1

Cable (11G1.5)

Pos.	Description/Kit No	95038410	95038411
1001	Cable	10 m / 32 ft	15 m / 49 ft
1026	Cable joint	6	6
1027	Cable joint	4	4
1030	Cable shoe	1	1

Cable entry 1.5 mm^2

Pos.	Description/Kit No		95065457
1003	Cable guide		1
1004	cable seal, large		1
1005	Thrust washer		1
1006	cable seal, small		1
1007	O-ring	39.45 x 1.78	1
1008	Cylinder head screw		2
1009	Cable relief		1
1025	O-ring	113.97 x 2.62	1
1026	Cable joint		10
1030	Cable shoe		1
-	Shrink tube for connections		10

Gasket kit

Pos.	Description/Kit No		95065483
1004	cable seal large		1
1006	cable seal small		1
1007	O-ring	39.45 x 1.78	1
1022	O-ring	158.42 x 2.62	2
1025	O-ring	113.97 x 2.62	1
1037	O-ring	56.82 x 2.62	1
1048	Mechanical shaft seal, rotor		1
	Mechanical shaft seal, stator		1
1050	Shim washer		1
1051	Circlip		1
1073	O-ring	215.57 x 2.62	1
1157	Gasket NBR	70 96 x 75 x 2	1

Gear housing

Note: Gear housing kit part are pre-assembled.

Pos.	Description/Kit No	95038481
1088	Gear housing	1
1089	Circlip	1
1090	Slotted nut;	1
1092	Tapered roller bearing 30209	1
1093	Gear shaft	1
1094	Tapered roller bearing 32209	1
1101	Drain plug with magnet	1
1102	Plug	2
1105	Parallel key	1
1119	PTFE tape	3

Propeller

Pos.	Description	50/60 Hz	SFG.07-22.230	SFG.25-40.230
		60 Hz US	SFG.10-30.91	SFG.34-55.91
		Kit No	2 blades	3 blades
			95039734	95039735
1104	Lip seal		2	2
1105	Parallel key		1	1
1106	Slotted nut		2	2
1109	Hub cover		1	1
1110	Washer		1	1
1111	Screw		1	1
1112	Hub (2 blades)		1	-
	Hub (3 blades)		-	1
1115	Hexagon head screw		4	6
1157	Gasket		1	1
1159	Washer		8	12
1160	Nut		4	6
1161	Hexagon head screw		2	3
1162	Propeller blade type ∅2300		2	3

Radial seal

Pos.	Description/Kit No		95039131
1073	O-ring	215.57 x 2.62	1
1104	Lip seal		2
1108	O-ring	94.92 x 2.62	1
	O-ring	184.0 x 3.0	1
	O-ring	225.0 x 3.0	1
1110	Washer		1
1157	Gasket NBR	70 96 x 75 x 2	1

Shaft seal

Pos.	Description/Kit No	95065470
1098	Mechanical shaft seal, rotor	1
	Mechanical shaft seal, stator	1

Water-in-oil sensor

Pos.	Description/Kit No	95038409
1049	Water-in-oil sensor	1
1173	Seal washer	1

Wear ring

Pos.	Description/Kit No		*95037375*
1073	O-ring	215.57 x 2.62	1
1097	Wear ring ceramic		1
1104	Lip seal		2
1108	O-ring	94.92 x 2.62	1
	O-ring	184.0 x 3.0	1
	O-ring	225.0 x 3.0	1
1110	Washer		1
1157	Gasket NBR	70 96 x 75 x 2	1

SFG.xx.230 (50/60 Hz) and SFG.xx.91 (60 Hz North America)

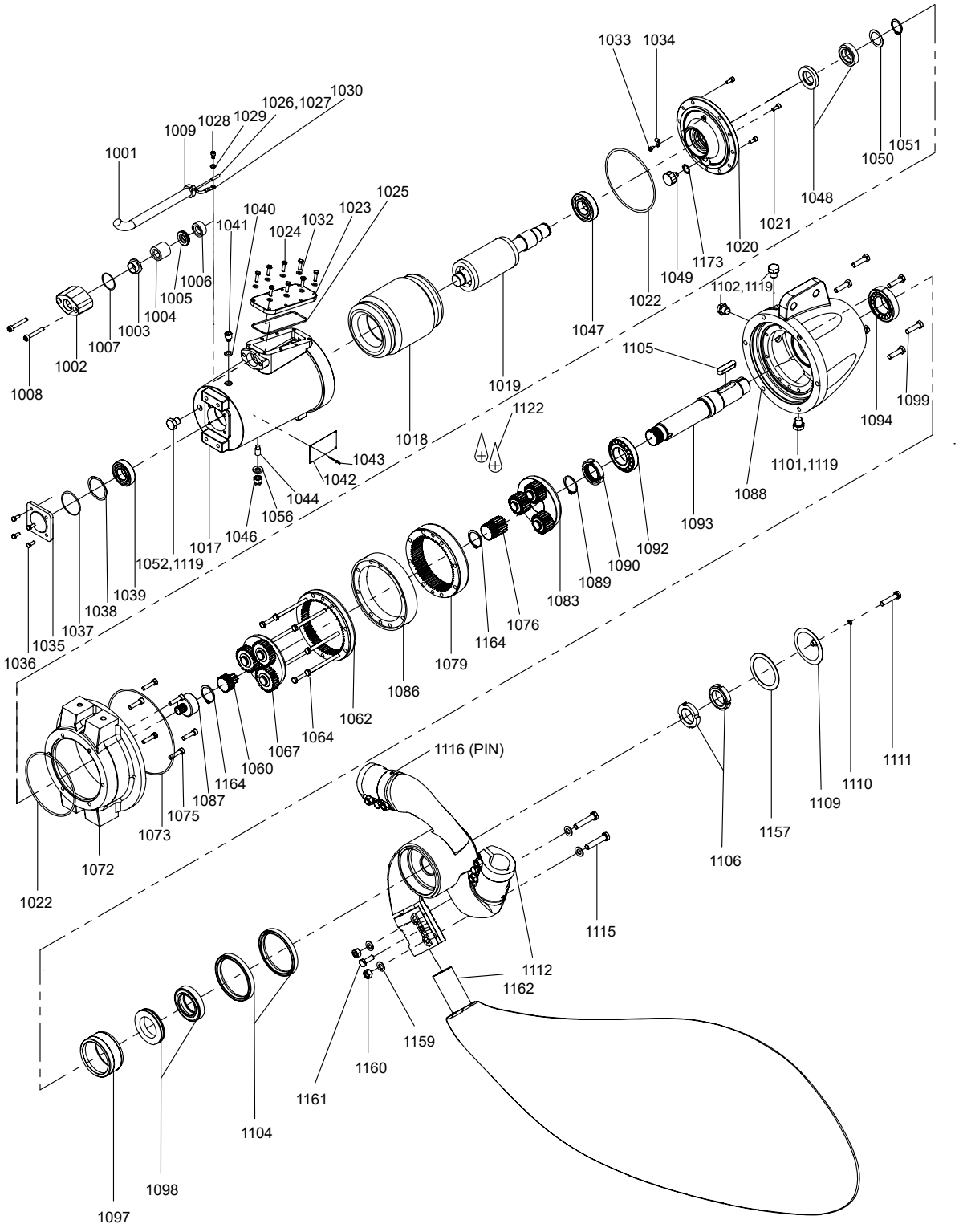

Gear

50 Hz	60 Hz SI	60 Hz US	STEP 1				STEP 2			
			i = 5.600	i = 6.750	i = 8.667	i = 3.875	i = 4.286	i = 4.833	i = 5.600	i = 6.750
SFG.07.230				*95039710*					*95038585*	
	SFG.07.230	SFG.10.91		*95039710*						*95038749*
SFG.10.230					*95038581*	*95039712*				
	SFG.09.230	SFG.12.91			*95038581*			*95038584*		
SFG.12.230			*95039711*						*95038585*	
	SFG.12.230	SFG.16.91		*95039710*					*95038585*	
SFG.15.230				*95039710*			*95038583*			
	SFG.16.230	SFG.22.91			*95038581*	*95039712*				
SFG.17.230					*95038581*			*95038584*		
	SFG.19.230	SFG.26.91			*95038581*				*95038585*	
SFG.22.230				*95039710*					*95038585*	
	SFG.22.230	SFG.30.91		*95039710*						*95038749*
SFG.26.230					*95038581*		*95038583*			
	SFG.25.230	SFG.34.91		*95039710*						*95038749*
SFG.33.230					*95038581*	*95039712*				
	SFG.32.230	SFG.43.91			*95038581*			*95038584*		
SFG.36.230				*95039710*				*95038584*		
	SFG.38/40.230	SFG.55.91		*95039710*					*95038585*	

Pos.	Description/Kit No	*95039711*	*95039710*	*95038581*	*95038582*	*95038583*	*95038584*	*95038585*	*95038749*
1060	Sun wheel	1	1	1	-	-	-	-	-
1062	Ring gear	1	1	1	-	-	-	-	-
1067	Planet gear complete	1	1	1	-	-	-	-	-
1076	Sun wheel	-	-	-	1	1	1	1	1
1079	Ring gear	-	-	-	1	1	1	1	1
1083	Planet carrier	-	-	-	1	1	1	1	1
1087	Gear coupling	1	1	1	-	-	-	-	-
1164	Circlip	1	1	1	1	1	1	1	1

Motor

Note: Motor kit parts are pre-assembled.

Pos.	Description	50/60 Hz	SFG.07-16.230	SFG.17-40.230
		60 Hz US	SFG.10-22.91	SFG.23-55.91
		Kit No	*95039700*	*95039701*
1002	Cable flange		1	1
1007	O-ring		1	1
1008	Screw		2	2
1017	Motor housing		1	1
1018	Stator winded 6-pole 1.8 kW (2.4 hp)		1	-
	Stator winded 4-pole 3.6 kW (4.8 hp)		-	1
1019	Rotor with shaft 4-pole 1.8 kW (2.4 hp)		1	-
	Rotor with shaft 6-pole 3.6 kW (4.8 hp)		-	1
1020	Motor flange		1	1
1021	Screw		3	3
1022	O-ring		2	2
1023	Terminal box cover		1	1
1024	Screw		8	8
1025	O-ring		1	1
1028	Screw		1	1
1029	Lock washer		1	1
1033	Screw		1	1
1034	Cable clamp		1	1
1035	Bearing cover		1	1
1036	Screw		4	4
1037	O-ring		1	1
1038	Compensation disc		1	1
1039	Ball bearing 6206		1	1
1040	U-washer		1	1
1041	Screw		1	1
1044	Set screw		1	1
1046	Nut		1	1
1047	Ball bearing 6207		1	1
1048	Mechanical shaft seal, rotor		1	1
	Mechanical shaft seal, stator		1	1
1049	Water-in-oil sensor		1	1
1050	Shim		1	1
1051	Circlip		1	1
1052	Plug		1	1
1056	Seal washer		1	1
1173	Seal washer		1	1

SFG.xx.230 (50/60 Hz) and SFG.xx.91 (60 Hz North America)

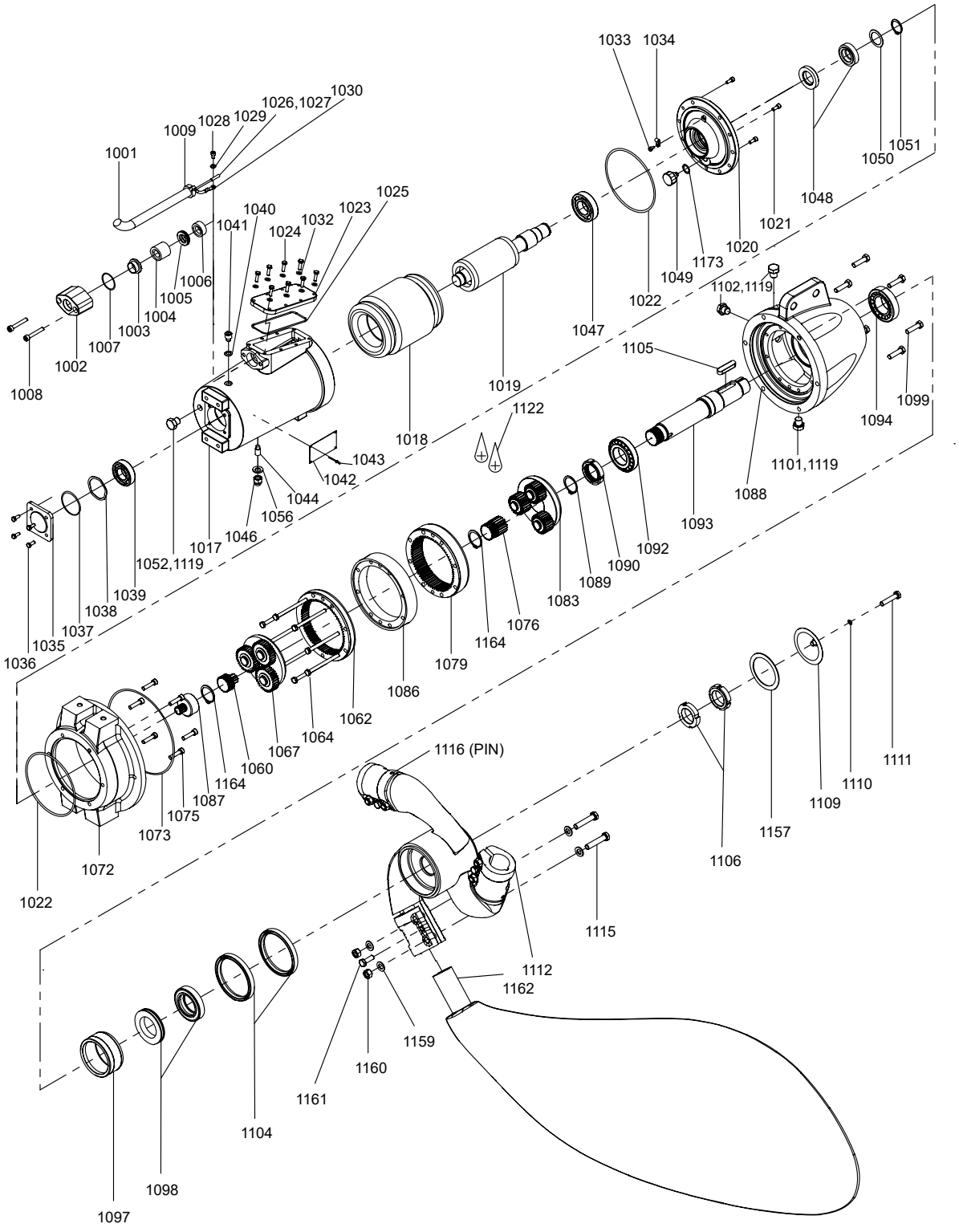

SFG.xx.260 (50/60 Hz) and SFG.xx.102 (60 Hz North America)

Bearing, motor

Pos.	Description/Kit No	*96645955*
1038	Compensation disc	1
1039	Ball bearing 6208 2RS1/C3	1
1047	Ball bearing 6010 2RS1/C3	1

Bearing, gearbox

Pos.	Description/Kit No	*95065475*
1090	Slotted nut	1
1091	Lock washer	1
1092	Tapered roller bearing 30212	1
1094	Tapered roller bearing 33212	1

Cable (11G2.5)

Pos.	Description/Kit No	*95038486*	*95038487*
1001	Cable	10 m / 32 ft	15 m / 49 ft
1026	Cable joint	6	6
1027	Cable joint	4	4
1030	Cable shoe	1	1

Cable entry, 2.5 mm^2

Pos.	Description/Kit No		*95065465*
1003	Cable guide		1
1004	cable seal, large		1
1005	Thrust washer		1
1006	cable seal, small		1
1007	O-ring	54.0 x 3.0	1
1008	Cylinder head screw		2
1009	Cable relief		1
1025	O-ring	139.29 x 3.53	1
1026	Cable joint		10
1030	Cable shoe		7
-	Shrink tube for connections		10

Gasket kit

Pos.	Description/Kit No		*95035812*
1004	cable seal, large		1
1006	cable seal, small		1
1007	O-ring	54.0 x 3.0	1
1022	O-ring	215.57 x 2.62	2
1025	O-ring	139.29 x 3.53	1
1037	O-ring	75.87 x 2.62	1
1048	Mechanical shaft seal, rotor		1
	Mechanical shaft seal, stator		1
1050	Shim		1
1051	Circlip		1
1073	O-ring	260.0 x 3.5	1
1108	O-ring	94.92 x 2.62	1

Gear housing

Note: Gear housing kit parts are pre-assembled.

Pos.	Description/Kit No	*95038588*
1088	Gear housing	1
1090	Slotted nut	1
1091	Lock washer	1
1092	Tapered roller bearing 30212	1
1093	Gear shaft	1
1094	Tapered roller bearing 33212	1
1095	Intermediate ring	1
1101	Drain plug with magnet	1
1102	Plug	2
1119	PTFE tape	3

Propeller

Pos.	Description	50/60 Hz	SFG.22-48.260	SFG.50-80.260
		60 Hz US	SFG.30-60.102	SFG.67-110.102
		Kit No	2 blades	3 blades
			95039736	*95039737*
1104	Lip seal		2	2
1106	Slotted nut		2	2
1108	Gasket NBR		1	1
1109	Hub cover		1	1
1110	Washer		1	1
1111	Screw		1	1
1112	Hub (2 blades)		1	-
	Hub (3 blades)		-	1
1113	Screw		2	3
1114	Washer		2	3
1131	Parallel key		2	3
1132	Blinds		2	3
1162	Propeller blade type ∅2600		2	3

Radial seal

Pos.	Description/Kit No		*95039132*
1073	O-ring	253.59 x 3.53	1
1104	Lip seal		2
1108	O-ring	120.2 x 3.53	1
	O-ring	225.0 x 3.0	1
	O-ring	94.92 x 2.62	1
1110	Washer		1

Shaft seal

Pos.	Description/Kit No	*95065478*
1095	Intermediate ring	1
1098	Mechanical shaft seal, rotor	1
	Mechanical shaft seal, stator	1

Water-in-oil sensor

Pos.	Description/Kit No	*95038409*
1049	Water-in-oil sensor	1
1173	Seal washer	1

Wear ring

Pos.	Description/Kit No		95037376
1073	O-ring	253.59 x 3.53	1
1097	Wear ring ceramic		1
1104	Lip seal		2
1108	O-ring	120.2 x 3.53	1
	O-ring	225.0 x 3.0	1
	O-ring	94.92 x 2.62	1
1110	Washer		1

SFG.xx.260 (50/60 Hz) and SFG.xx.102 (60 Hz North America)

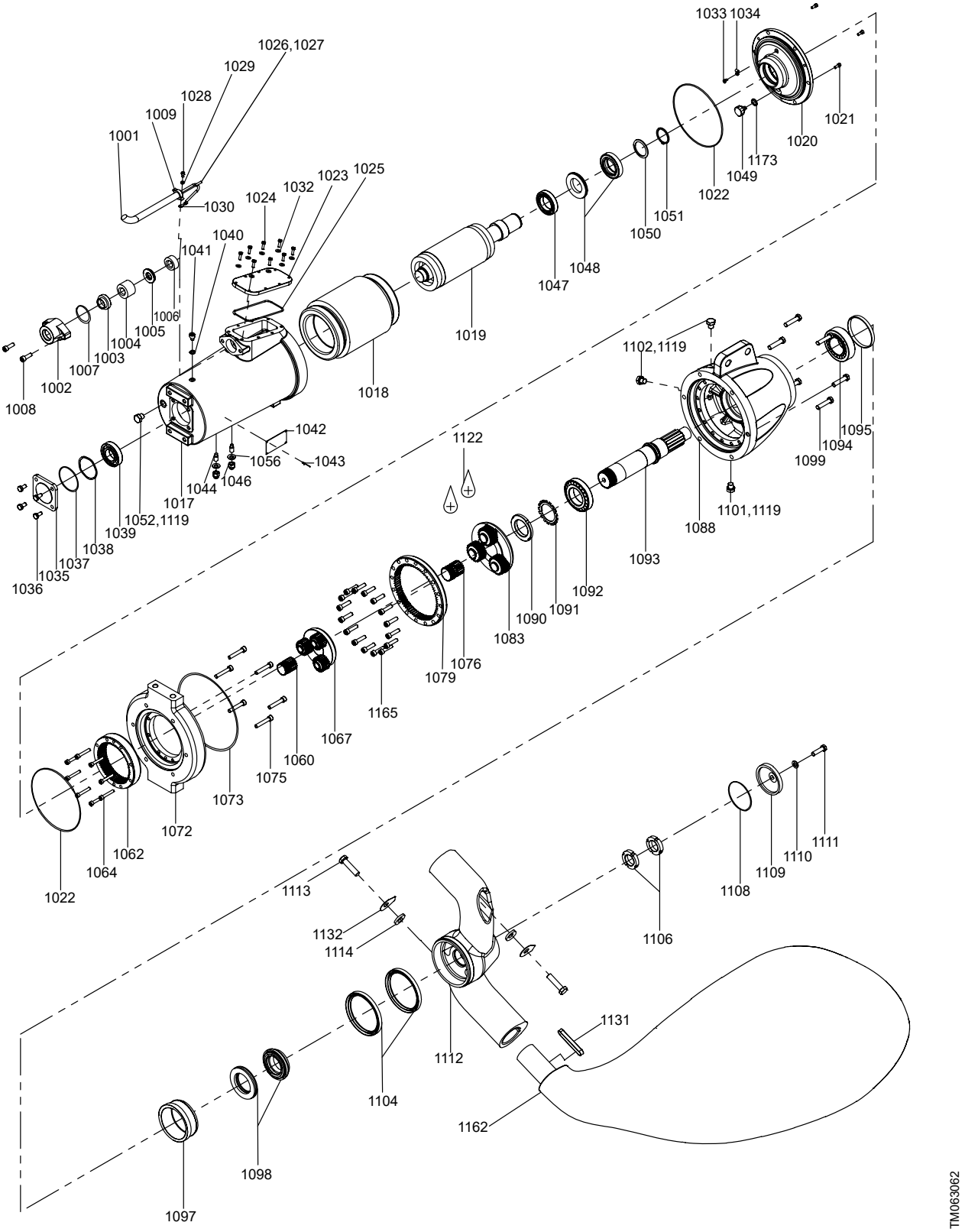

Gear

50 Hz	60 Hz SI	60 Hz US	STEP 1				STEP 2				
			i = 4.286	i = 4.833	i = 5.600	i = 6.750	i = 3.500	i = 4.125	i = 4.571	i = 5.167	i = 6.000
SFG.22.260					*95065517*						*95038769*
	SFG.22.260	SFG.30.102				*95065524*					*95038769*
SFG.27.260						*95065524*			*95038611*		
SFG.32.260				*95065518*							*95038769*
	SFG.32.260	SFG.43.102				*95065524*				*95065525*	
SFG.36.260						*95065524*		*95065496*			
	SFG.36.260	SFG.48.102			*95065517*						*95038769*
SFG.44.260	-	-	*95065495*								*95038769*
	SFG.44.260	SFG.60.102				*95065524*			*95038611*		
SFG.48.260				*95065518*						*95065525*	
SFG.50.260						*95065524*		*95065496*			
	SFG.50.260	SFG.67.102			*95065517*						*95038769*
SFG.60.260			*95065495*								*95038769*
	SFG.60.260	SFG.82.102				*95065524*			*95038611*		
SFG.66.260				*95065518*						*95065525*	
	SFG.72.260	SFG.98.102			*95065517*					*95065525*	
SFG.74.260						*95065524*	*95065522*				
SFG.80.260					*95065517*			*95065496*			
	SFG.80.260	SFG.110.102				*95065524*		*95065496*			

Pos.	Description/Kit No	*95065495*	*95065518*	*95065517*	*95065524*	*95065522*	*95065496*	*95038611*	*95065525*	*95038769*
1060	Sun wheel	1	1	1	1	-	-	-	-	-
1062	Ring gear	1	1	1	1	-	-	-	-	-
1067	Planet gear complete	1	1	1	1	-	-	-	-	-
1076	Sun wheel	-	-	-	-	1	1	1	1	1
1079	Ring gear	-	-	-	-	1	1	1	1	1
1083	Planet carrier	-	-	-	-	1	1	1	1	1

Motor

Note: Motor kit parts are pre-assembled.

Pos.	Description	50/60 Hz	SFG.22-48.260	SFG.50-80.260
		60 Hz US	SFG.30-60.102	SFG.67-110.102
		Kit No	*95039707*	*95039708*
1002	Cable flange		1	1
1007	O-ring		1	1
1008	Screw		2	2
1017	Motor housing		1	1
1018	Stator 6-pole 5.0 kW (6.7 hp)		1	-
	Stator 6-pole 8.0 kW (11 hp)		-	1
1019	Rotor with shaft 6-pole 5.0 kW (6.7 hp)		1	-
	Rotor with shaft 6-pole 8.0 kW (11 hp)		-	1
1020	Motor flange		1	1
1021	Screw		3	3
1022	O-ring		2	2
1023	Terminal box cover		1	1
1024	Screw		8	8
1025	O-ring		1	1
1028	Screw		1	1
1029	Lock washer		1	1
1033	Screw		1	1
1034	Cable clamp		1	1
1035	Bearing cover		1	1
1036	Screw		4	4
1037	O-ring		1	1
1038	Compensation disc		1	1
1039	Ball bearing 6208		1	1
1040	U-washer		1	1
1041	Screw		1	1
1044	Set screw		2	2
1046	Nut		2	2
1047	Ball bearing 6010		1	1
1048	Mechanical shaft seal, rotor		1	1
	Mechanical shaft seal, stator		1	1
1049	Water-in-oil sensor		1	1
1050	Shim		1	1
1051	Circlip		1	1
1052	Plug		1	1
1056	Seal washer		2	2
1173	Seal washer		1	1

SFG.xx.260 (50/60 Hz) and SFG.xx.102 (60 Hz North America)

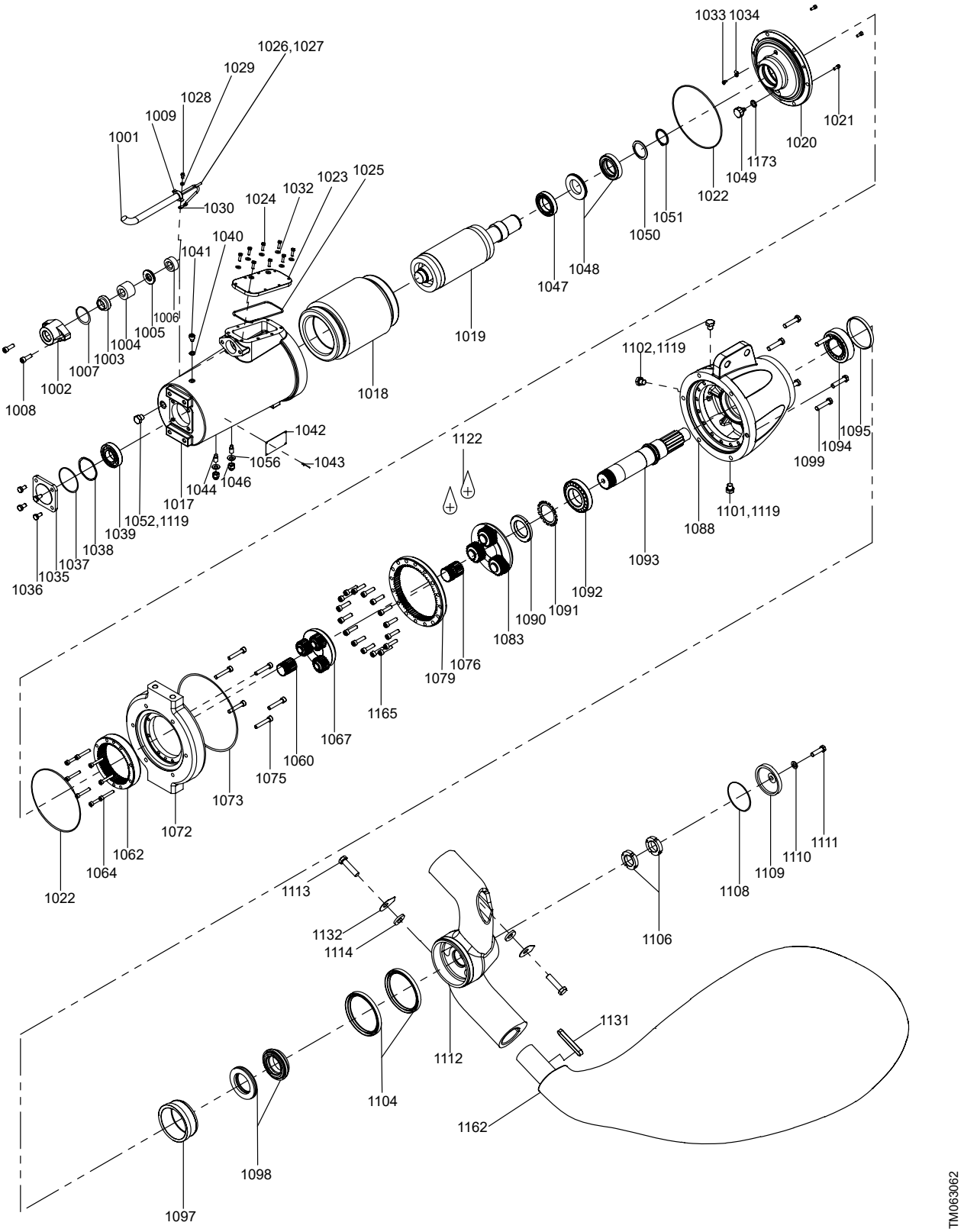

TM063062

SFG.H (heady-duty)

Cable

Pos.	Description/Kit No		SFG.H.110.150	SFG.H.70.260 SFG.H.110.260
			95036338	*95036314*
1002	Cable, complete		1	1
1007	O-ring	54.0 x 3.0	1	1
1025	O-ring	139.29 x 3.53	1	1
1026	Cable press connector		4	4
1030	Cable end connector		6	6
-	Shrink tube	(D6.4-3.2)	-	-
-	Shrink tube	(D12.7-6.4)	-	-
-	Shrink tube	(D25.4-12.7)	-	-
-	Paint, modified epoxy, base (part A)		-	-
-	Paint, modified epoxy, curing agent (part B)		-	-

Gear

First planetary gear stage

Pos.	Description/Kit No	SFG.H.110.150.91	SFG.H.110.150.83	SFG.H.70.260.44	SFG.H.110.260.51
		i = 4.286	i = 4.286	i = 5.600	i = 5.600
		95065492	*95065495*	*95065517*	*95065517*
1060	Sun wheel	1	1	1	1
1062	Ring gear	1	1	1	1
1067	Planet carrier	1	1	1	1

Second planetary gear stage

Pos.	Description/Kit No	SFG.H.110.150.91	SFG.H.110.150.83	SFG.H.70.260.44	SFG.H.110.260.51
		i = 3.778	i = 4.125	i = 6.000	i = 5.167
		95065521	*95065496*	*95038769*	*95065525*
1060	Sun wheel	1	1	1	1
1062	Ring gear	1	1	1	1
1067	Planet carrier	1	1	1	1

Gear housing

Pos.	Description/Kit No	SFG.H.110.150	SFG.H.70.260 SFG.H.110.260
		95038516	*95038588*
1088	Gear housing	1	1
1090	Slotted nut	1	1
1091	Washer	1	1
1092	Ball bearing 30212	1	1
1093	Shaft drive	1	1
1094	Ball bearing 33212	1	1
1095	Distance ring	1	1
1101	Plug	1	1
1102	Plug	2	2
1105	Key	1	1
-	Strip teflon	3	3

Propeller

For 2-blade versions only.

Pos.	Description/Kit No		SFG.H.70	SFG.H.
			95039736	*95038509*
1104	Lip seal		2	2
1106	Slotted nut		2	2
1108	Gasket NBR 65	D106/90 x 10	1	1
1109	Hub cover		1	1
1110	Washer		1	1
1111	Screw		1	1
1112	Hub		1	1
1113	Screw		2	2
1114	Washer		2	2
1131	Fit-in key		2	2
1132	Cover		2	2
1162	Propeller blade		2	2

SFG.H.xx.150

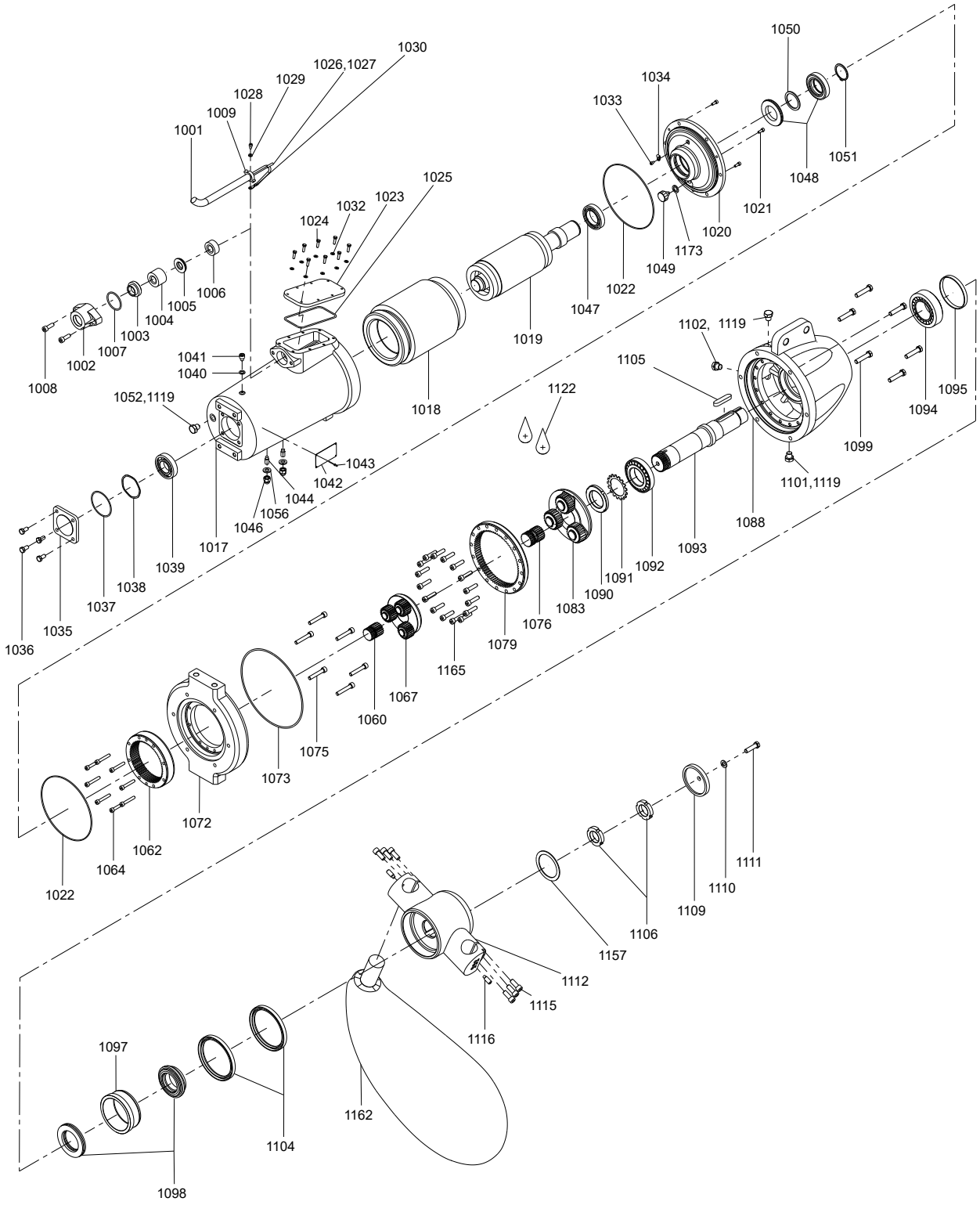
1030
1026,1027
1029
1028
1009
1001
1050
1034
1033
1051
1048
1021
1020
1173
1049
1022
1047
1025
1032
1023
1024
1006
1005
1004
1003
1007
1002
1008
1041
1040
1052,1119
1018
1019
1122
1102, 1119
1105
1095
1094
1099
1101,1119
1088
1093
1092
1091
1090
1083
1076
1079
1165
1067
1060
1075
1073
1072
1062
1064
1022
1043
1042
1044
1056
1046
1017
1039
1038
1037
1035
1036
1111
1110
1109
1106
1157
1112
1115
1116
1097
1104
1162
1098
TM070002

SFG.H.xx.260

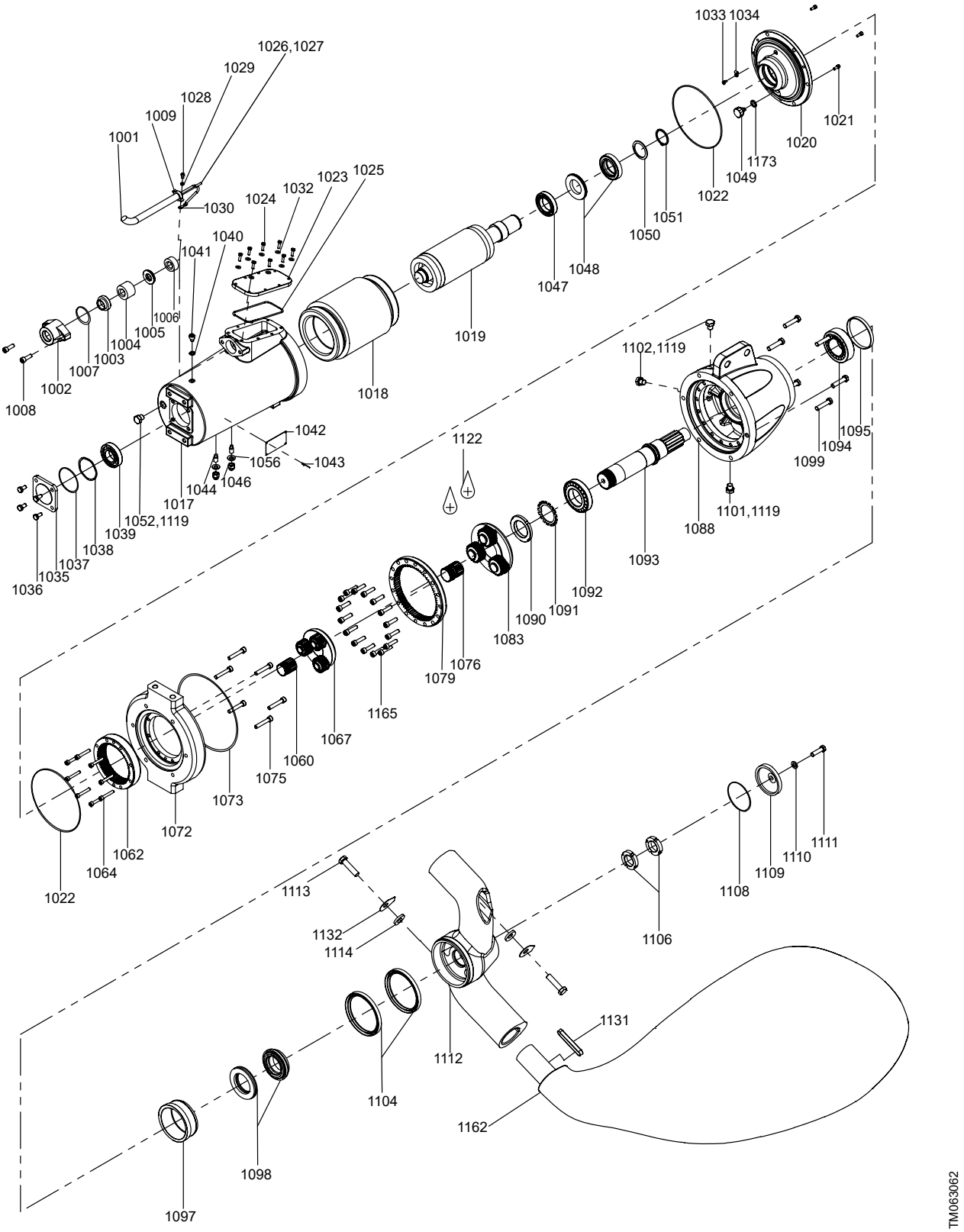
1033 1034
1026,1027
1029
1028
1009
1001
1030
1024
1032
1023
1025
1040
1041
1006
1005
1004
1003
1007
1002
1008
1042
1056
1043
1044
1046
1017
1052,1119
1039
1038
1037
1035
1036
1018
1019
1047
1048
1050
1051
1022
1049
1173
1020
1021
1102,1119
1095
1094
1099
1122
1101,1119
1088
1093
1092
1091
1090
1083
1076
1079
1165
1067
1060
1075
1073
1072
1062
1064
1022
1113
1132
1114
1112
1104
1098
1097
1131
1162
1106
1108
1109
1110
1111
TM063062

Bearing, motor

Pos.	Description/Kit No		96645955
1038	Compensation disc		1
1039	Ball bearing 6208 2RS		1
1047	Ball bearing 6010 2RS		1

Bearing, gearbox

Pos.	Description/Kit No		95065475
1090	Slotted nut		1
1091	Washer		1
1092	Tapered roller bearing 30212		1
1094	Tapered roller bearing 33212		1

Gasket

Pos.	Description/Kit No		95035812
1004	cable seal, large		1
1006	cable seal, small		1
1007	O-ring	54.0 x 3.0	1
1008	O-ring	97.92 x 2.62	1
1022	O-ring	215.57 x 2.62	1
1025	O-ring	139.29 x 3.53	1
1037	O-ring	75.87 x 2.62	1
		260.0 x 3.5	1
1048	Shaft seal - rotor		1
	Shaft seal - stator		1
1050	Washer		1
1051	Circlip		1
1157	Gasket NBR	65 D106/90 x 10	1

Gear housing and hub cover

Pos.	Description/Kit No	95039320
1088	Gear housing	1
1109	Hub cover	1

Radial seal

Pos.	Description/Kit No		95039132
1022	O-ring	253.59 x 3.53	1
1104	Lip seal		2
1108	O-ring	94.92 x 2.62	1
	O-ring	120.24 3.53	1
	O-ring	225.0 x 3.0	1
1110	Washer		1
1157	Gasket NBR	65 D106/90 x 10	1
	Gasket NBR	65 D135/133 x 12	1

Shaft seal

Pos.	Description/Kit No	95065478
1095	Distance ring	1
1098	Shaft seal - rotor	1
	Shaft seal - stator	1

Wear ring

Pos.	Description/Kit No		95037376
1097	Wear ring ceramic		1
1104	Lip seal		2
1108	O-ring	94.92 x 2.62	1
	O-ring	120.24 x 3.53	1
	O-ring	225.0 x 3.0	1
1022	O-ring	253.59 x 3.53	1
1110	Washer		1
1157	Gasket NBR	65 D106/90 x 10	1
	Gasket NBR	65 D135/113 x 12	1

WIO sensor

Pos.	Description/Kit No	95038409
1049	WIO sensor	1
1173	Seal washer	1
-	Contactor	2

SFG.H.xx.150

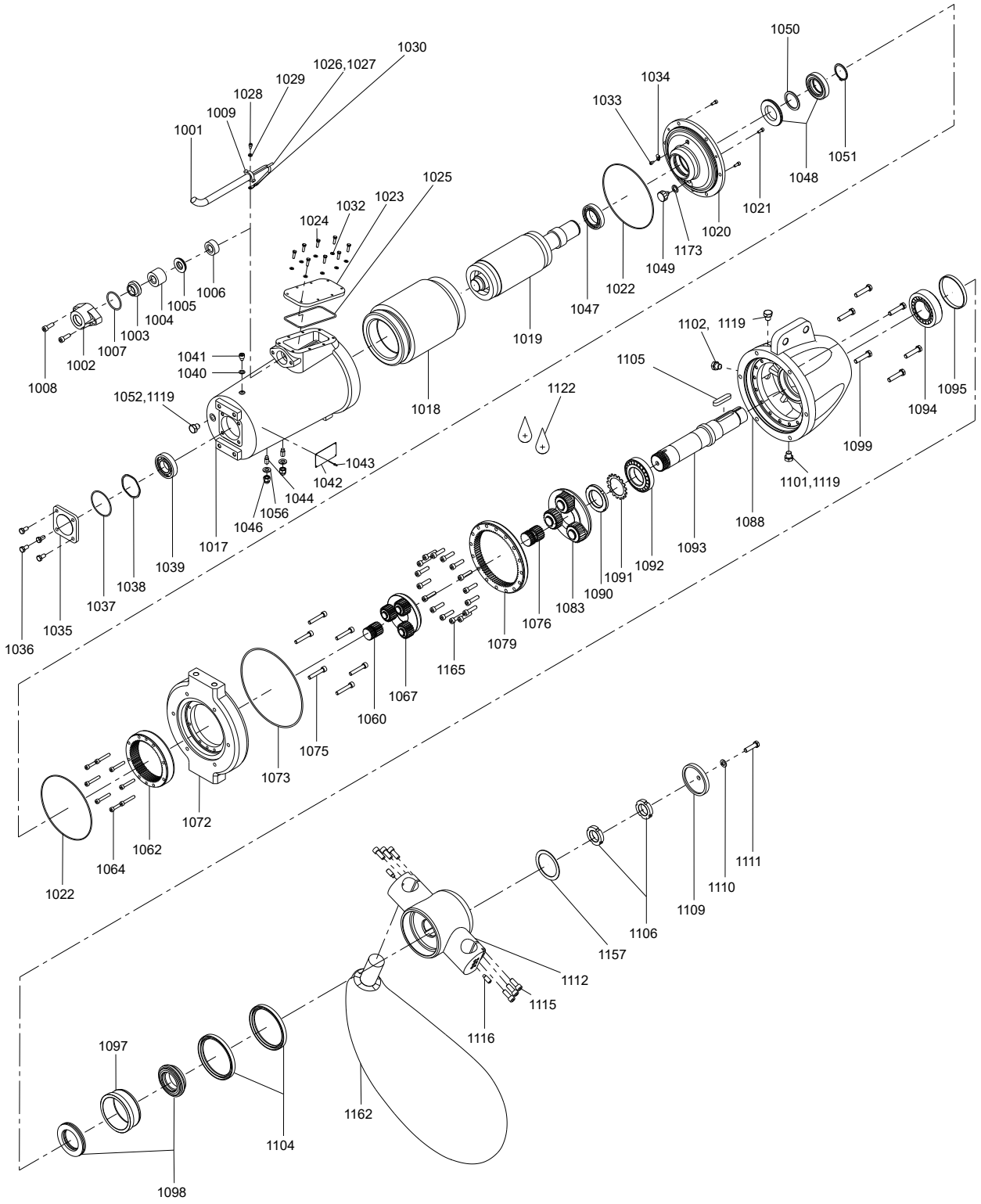
1030
1026,1027
1029
1028
1009
1001
1050
1034
1033
1051
1048
1021
1020
1173
1049
1022
1047
1025
1032
1023
1024
1019
1006
1005
1004
1003
1007
1002
1008
1041
1040
1052,1119
1018
1122
1102, 1119
1105
1095
1094
1099
1101,1119
1088
1093
1092
1091
1090
1083
1076
1079
1165
1067
1060
1075
1073
1072
1062
1064
1022
1111
1110
1109
1106
1157
1112
1115
1116
1097
1104
1162
1098
1043
1042
1044
1056
1046
1017
1039
1038
1037
1035
1036
TM070002

SFG.H.xx.260

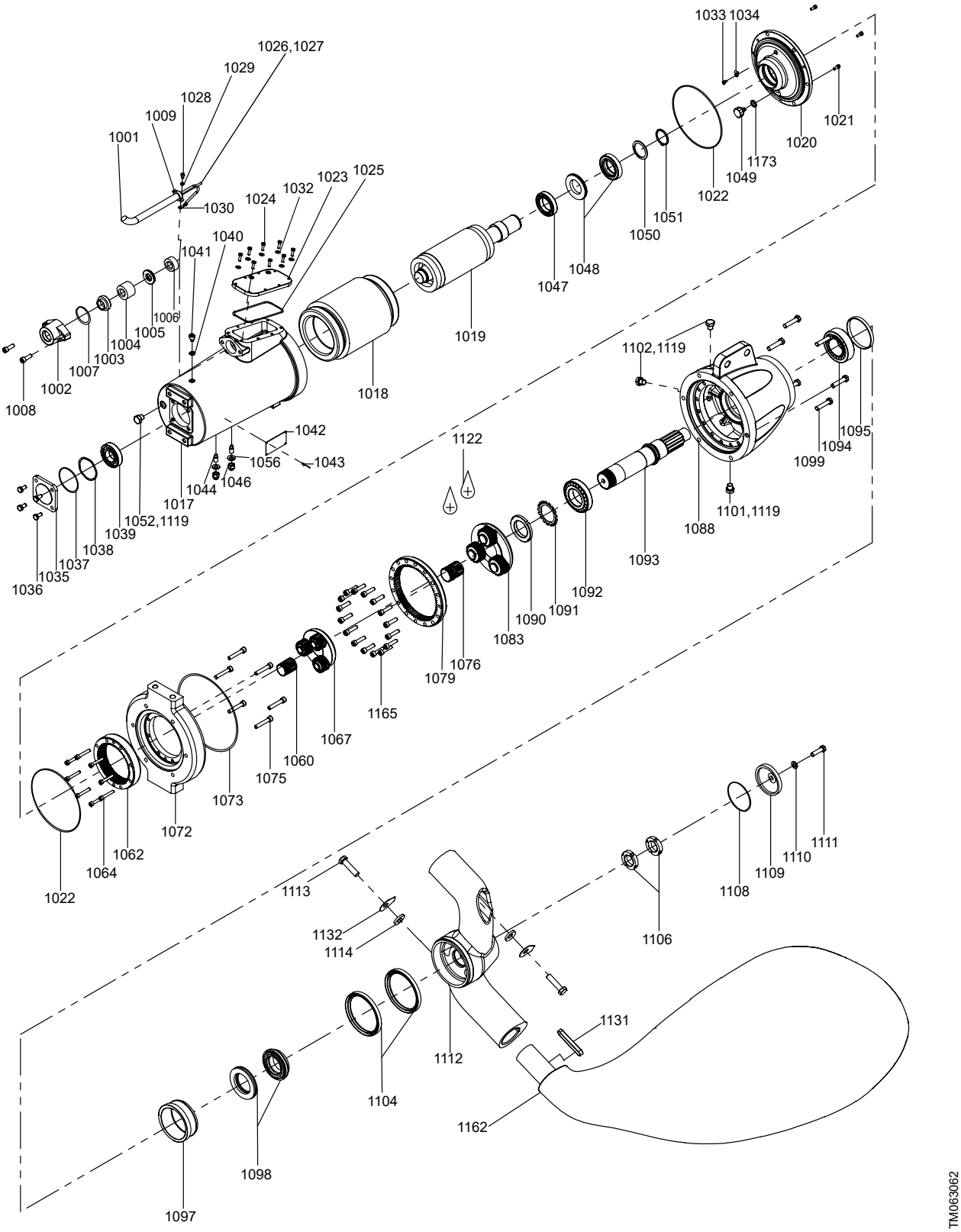
1033 1034
1026,1027
1029
1028
1009
1001
1030
1024
1032
1023
1025
1040
1041
1006
1005
1004
1003
1007
1002
1008
1021
1020
1173
1049
1022
1051
1050
1048
1047
1019
1018
1042
1056
1043
1044
1046
1017
1052,1119
1039
1038
1037
1035
1036
1122
1102,1119
1095
1094
1099
1101,1119
1088
1093
1092
1091
1090
1083
1076
1079
1165
1067
1060
1075
1073
1072
1062
1064
1022
1113
1132
1114
1106
1108
1109
1110
1111
1131
1112
1104
1162
1098
1097
TM063062

46. MMS

MMS 6

50/60 Hz, 5.5 - 37 kW

Bearing

Pos.	Kit No	96880698
	Description	
204	Radial bearing	2

Lower bearing housing

Pos.	Description	Standard version	N version	R version
	Kit No	96880705	96880706	96880707
236	Lower bearing housing	1	1	1
204	Radial bearing	1	1	1

Seal kit

Pos.	Kit No		96880714
	Description		
232	Sand shield		1
222b	O-ring FKM	11 x 2.0	1
231	O-ring NBR	50.5 x 1.8	1
234	Gasket for pos. 235		1
224b	O-ring NBR	120 x 2.5	2
224a	O-ring NBR	131 x 3	2
222c	Seal washer	17 x 21	1
250a	Cable grommet Pt100	4 x (1 x 6 mm^2)	2
	Cable grommet Pt100	4 x (1 x 10 mm^2)	2
	Cable grommet Pt100	4 x (1 x 16 mm^2)	2
212	Diaphragm		1

Screw for bearing housing

Pos.	Description		Standard version	N version	R version
	Kit No		96880711	96880712	96880713
250d	Screw for Pt100		2	2	2
248	Hexagon socket head cap screw	M8 x 10	2	2	2
248	Hexagon socket head cap screw	M8 x 25	4	4	4
237	Special NEMA stud	M12 x 50	4	4	4
238a	Hexagon nut	M12	4	4	4
238	Washer	13 x 24	4	4	4

Thrust bearing

Pos.	Kit No		96880708
	Description		
203	Thrust bearing, stationary		1
206	Thrust ring, rotating		1
208b	Thrust bearing support		1
208a	Thrust ring support		1
215	Set screw	M6 x 8	2
216	Ring nut	M17	1
216a	Washer	19 x 30 x 2.5	1
242	Upthrust spacer		1

Upper bearing housing

Pos.	Description	Standard version		N version		R version	
		DOL [1]	SD [2]	DOL [1]	SD [2]	DOL [1]	SD [2]
	Kit No	96880699	96880700	96880701	96880702	96880703	96880704
205	NEMA flange	1	1	1	1	1	1
204	Radial bearing	1	1	1	1	1	1

1) 1 x cable entry kit

2) 2 x cable entry kit

MMS 6

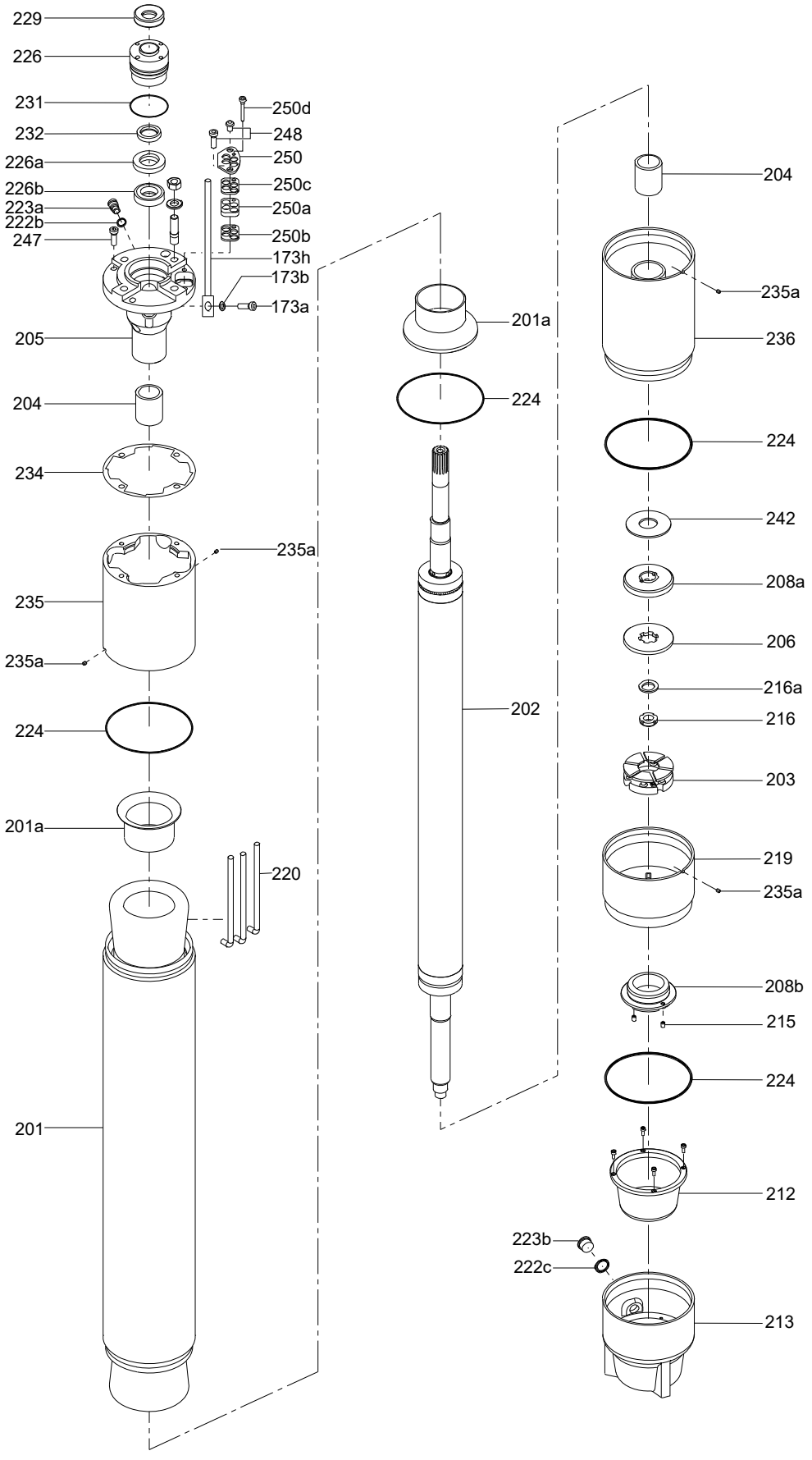
229
226
231
232
226a
226b
223a
222b
247
250d
248
250
250c
250a
250b
173h
173b
173a
205
204
234
235a
235
235a
224
201a
220
201
201a
224
202
204
235a
236
224
242
208a
206
216a
216
203
219
235a
208b
215
224
212
223b
222c
213
TM045193

Shaft seal

Pos.	Description		Ceramic/carbon	SiC/SiC
	Kit No		96880709	96880710
232	Lip seal FKM	25 x 37 x 7	1	1
226a	Stationary part	50 x 25	1	1
226b	Rotating part		1	1
231	O-ring NBR	50.5 x 1.8	1	1

Valve

Pos.	Description		Standard version	N version	R version
	Kit No		96880715	96880716	96880717
223a	Valve		1	1	1
222c	Seal washer	17 x 21	1	1	1
223b	Plug		1	1	1

Windings, PVC

kW	50 Hz					60 Hz			
	220-230 V	400 V	415 V	460 V	500 V	220 V	380 V	460 V	575 V
5.5	96881166	96881124	-	-	-	96881152	96881138	96881124	-
7.5	96881167	96881125	-	96881185	-	96881153	96881139	96881125	-
9.2	96881168	96881126	-	96881186	-	96881154	96881140	96881126	-
11	96881169	96881127	-	96881187	-	96881155	96881141	96881127	-
13	96881170	96881128	-	96881188	-	96881156	96881142	96881128	-
15	96881171	96881129	-	96881189	-	96881157	96881143	96881129	-
18.5	96881172	96881130	-	96881190	-	96881158	96881144	96881130	-
22	96880744	96880718	-	96880760	-	96880736	96880728	96880718	-
26	96880745	96880719	-	96880761	-	96880737	96880729	96880719	-
30	96880746	96880720	-	96880762	-	96880738	96880730	96880720	-
37	96880747	96880721	-	96880763	-	96880739	96880731	96880721	-

Windings, PE2 + PA

kW	50 Hz					60 Hz			
	220-230 V	400 V	415 V	460 V	500 V	220 V	380 V	460 V	575 V
5.5	96881173	96881131	-	-	-	96881159	96881145	96881131	-
7.5	96881174	96881132	-	96881191	-	96881160	96881146	96881132	-
9.2	96881175	96881133	-	96881192	96881180	96881161	96881147	96881133	-
11	96881176	96881134	-	96881193	96881181	96881162	96881148	96881134	-
13	96881177	96881135	-	96881194	96881182	96881163	96881149	96881135	-
15	96881178	96881136	-	96881195	96881183	96881164	96881150	96881136	-
18.5	96881179	96881137	-	96881196	96881184	96881165	96881151	96881137	-
22	96880748	96880722	-	96880764	96880752	96880740	96880732	96880722	96880752
26	96880749	96880723	-	96880765	96880753	96880741	96880733	96880723	96880753
30	96880750	96880724	96880726	96880766	96880754	96880742	96880734	96880724	96880754
37	96880751	96880725	96880727	96880767	96880755	96880743	96880735	96880725	96880755

Windings, PE2 + PA (Japan)

kW	200-220 V 50/60 Hz SF 1.00	400-440 V 50/60 Hz SF 1.00
26	96880756	96880758
30	96880757	96880759

MMS 6

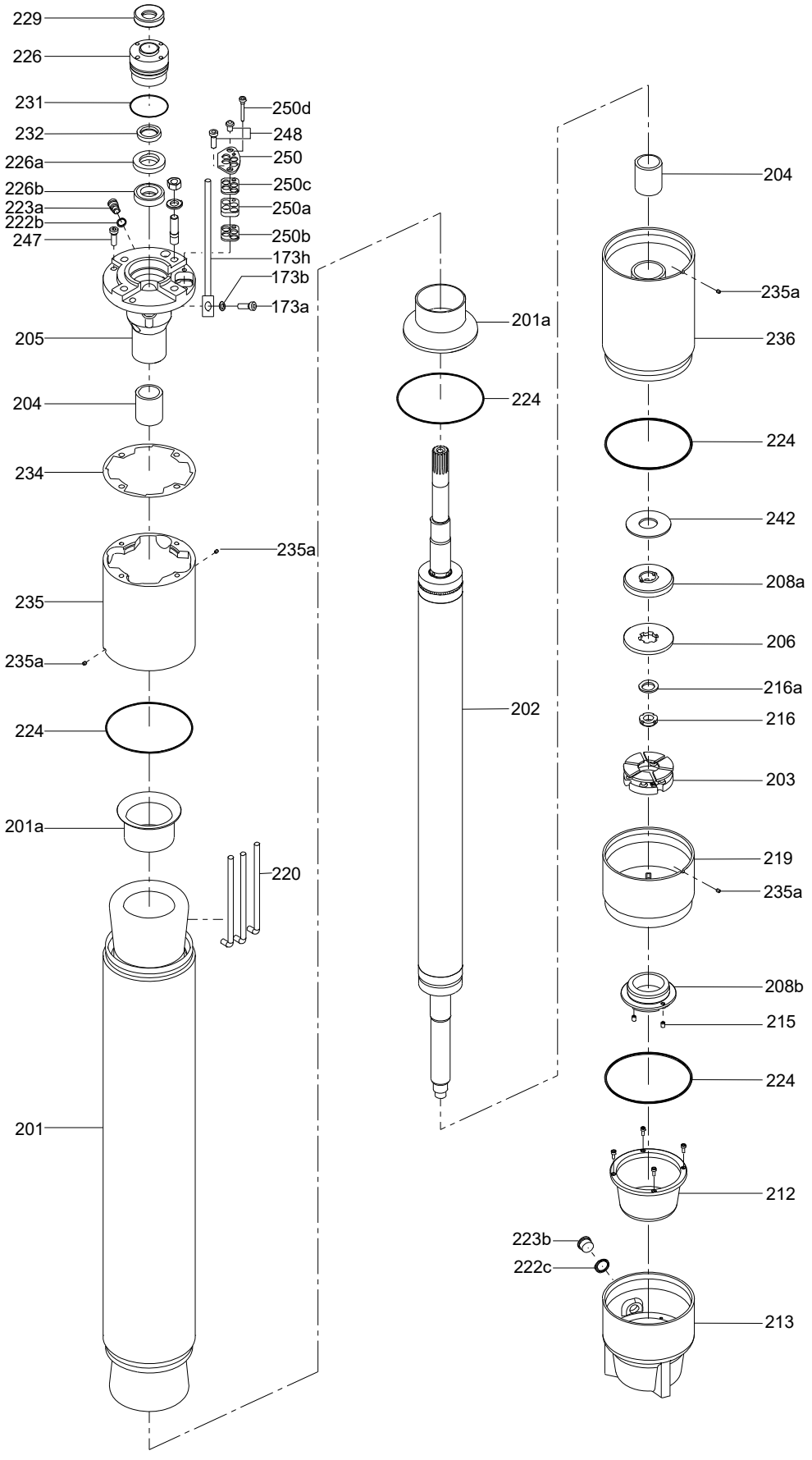
229
226
231
232
226a
226b
223a
222b
247
250d
248
250
250c
250a
250b
173h
173b
173a
205
204
234
235a
235
235a
224
201a
220
201
201a
224
202
204
235a
236
224
242
208a
206
216a
216
203
219
235a
208b
215
224
212
223b
222c
213
TM045193

Cable entry

Pos.	Description		Standard version	N version	R version
	Kit No		96880695	96880696	96880697
250	Clamping plate	4 x 1 + Pt100	1	1	1
250b	Grommet disc	4 x (1 x 6/10/16 mm^2)	2	2	2
250a	Cable grommet	4 x (1 x 6 mm^2) + Pt100	1	1	1
	Cable grommet	4 x (1 x 10 mm^2) + Pt100	1	1	1
	Cable grommet	4 x (1 x 16 mm^2) + Pt100	1	1	1
250d	Guide pin for Pt100		1	1	1
248	Screw	M8 x 10	1	1	1
248	Screw	M8 x 25	1	1	1

Cable joint

Pos.	Description	6/10/16 mm^2
	Kit No	96880779
-	Cable joint	1

Motor cable

kW	3 x 220-230 V, 60 Hz		3 x 220-230 V, 50 Hz		3 x 380-415 V, 50 Hz 3 x 460 V, 60 Hz		3 x 575 V, 60 Hz 3 x 500 V, 50 Hz 3 x 460 V, 50 Hz		3 x 380 V, 60 Hz	
	DOL [1]	SD [2]	DOL [1]	SD [2]	DOL [1]	SD [2]	DOL [1]	SD [2]	DOL [1]	SD [2]
	3 x 1	6 x 1	3 x 1	6 x 1	3 x 1	6 x 1	3 x 1	6 x 1	3 x 1	6 x 1
5.5-15	96880772	-	96880772	-	96880772	96880772	96880772	-	96880772	-
18.5-22	96880773	-	96880773		96880772	96880772	96880772	-	96880772	-
26	96880774	-	96880773	-	96880772	96880772	96880772	-	96880773	-
30	96880774	-	96880774	-	96880773	96880772	96880773	-	96880773	-
37	-	96880773	-	96880773	96880773	96880772	96880773	-	96880773	-

1) 1 x motor cable kit

2) 2 x motor cable kit

Motor cable (Japan)

kW	3 x 200-220 V, 50/60 Hz SF 1.00		3 x 400-440V, 50/60 Hz SF 1.00	
	DOL [3]	SD [4]	DOL [1]	SD [2]
	3 x 1	6 x 1	3 x 1	6 x 1
26	-	96880773	-	96880773
30	-	96880773	-	96880773

3) 1 x motor cable kit

4) 2 x motor cable kit

MMS 6

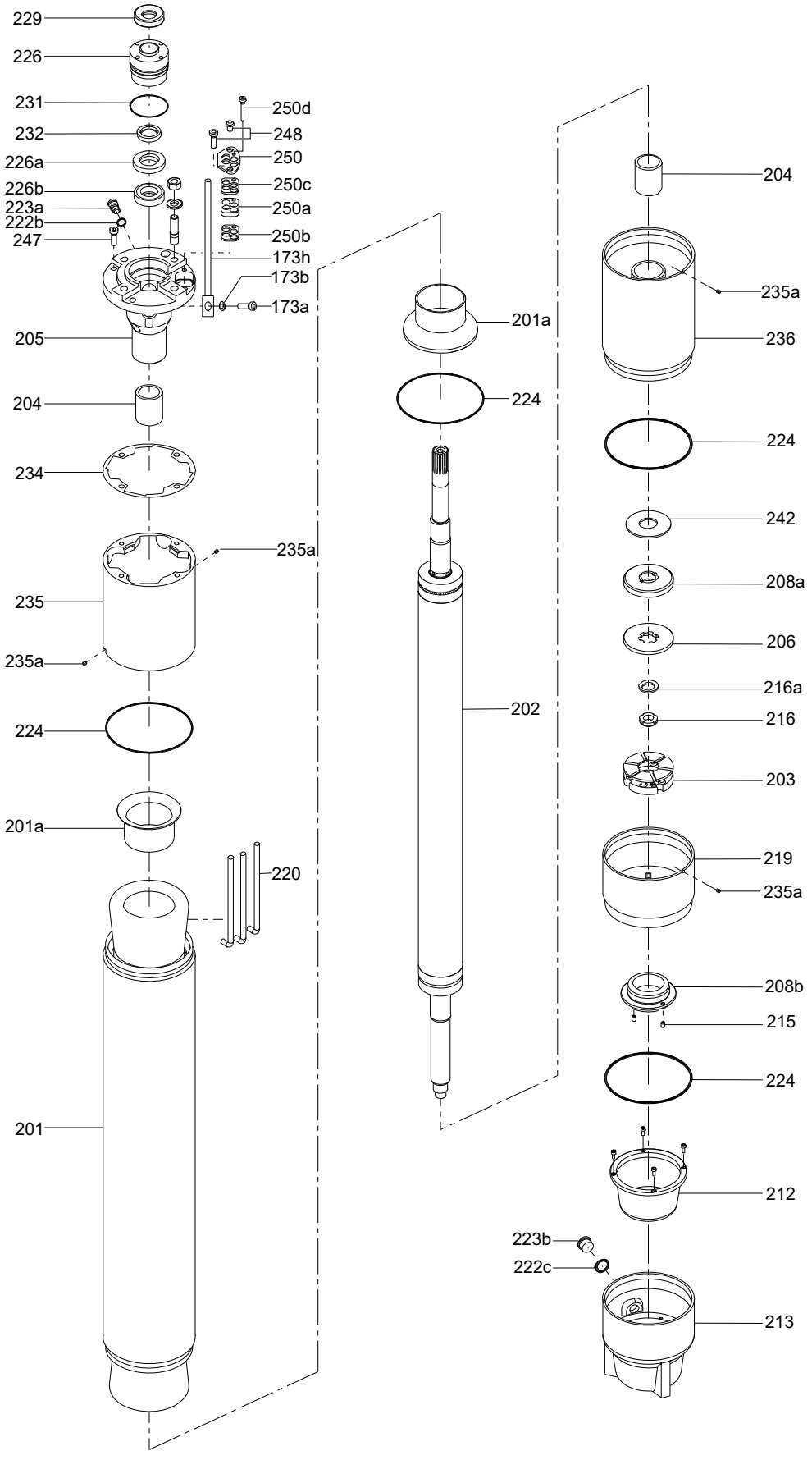
229
226
231
232
226a
226b
223a
222b
247
250d
248
250
250c
250a
250b
173h
173b
173a
205
204
234
235a
235
235a
224
201a
220
201
201a
224
202
204
235a
236
224
242
208a
206
216a
216
203
219
235a
208b
215
224
212
223b
222c
213
TM045193

MMS 6000
50/60 Hz, 3.7-15 kW

Bearing

Pos.	Kit No	96436077
	Description	3.7-15 kW
204	Bearing ring	2
204a	Lower bearing ring	1

Cable joint

Pos.	Description	6/10 mm²
	Kit No	96546811
-	Cable joint	1

Cable entry

Pos.	Description	With PT100 hole		Without PT100 hole	
		3x6 mm²	3x10 mm²	3x6 mm²	3x10 mm²
	Kit No	96537585	96537632	96537656	96537662
250	Cable gland flange	1	1	1	1
250a	Grommet	1	1	1	1
250b	Grommet disc	2	2	2	2
250c	Grommet disc	1	1	1	1
-	Screw M8 x 12	2	2	2	2
-	Screw for PT100	1	1	-	-

Lower bearing housing

Pos.	Description	DIN W.-Nr. 0.6025	DIN W.-Nr. 1.4401
	Kit No	96457622	96467280
236	Lower bearing housing	1	1
204a	Bearing ring	2	2
242	Upthrust spacer	1	1
242a	Screw	3	3

Miscellaneous

Pos.	Kit No		96441437
	Description		3.7-15 kW
207	Diaphragm cover		1
216	Retaining ring		1
216a	Disc	28/20 x 0.5	2
		28/20 x 0.3	1
		28/20 x 0.2	1
223a	Air vent screw		1
234a	Filling screw		1

Motor cable

Pos.	Description	6 mm²	10 mm²
	Kit No	96546825	96546827
220	Motor cable, round	1	1
-	Strip	6	6

Upper bearing housing

Pos.	Description	DOL [1]		SD [2]	
		DIN W. Nr.0.6025	DIN W. Nr. 1.4401	DIN W. Nr. 0.6025	DIN W. Nr. 1.4401
	Kit No	96506757	96521654	96506758	96521672
205	Upper bearing housing	1	1	1	1
204	Bearing bush	2	2	2	2

1) 1 x cable entry kit

2) 2 x cable entry kit

Seal kit

Pos.	Kit No	96545321
	Description	3.7-37 kW
212	Diaphragm	1
222b	Sealing washer	2
224	O-ring	2
234	Gasket	1

Shaft seal

Pos.	Description	Ceramic / carbon	SiC/SiC
	Kit No	96504966	96504967
226	Mechanical seal	1	1
227	Shoulder ring	1	1
228	Locking ring	1	1
228a	Screw	3	3
229	Sand shield	1	1

Thrust bearing

Pos.	Kit No	96457623
	Description	3.7-15 kW
203	Thrust bearing pad	1 set
206	Rotating thrust bearing	1

Windings, PVC

kW	DOL [3]							SD [4]				
	220-230 V	380-415 V	500 V	220 V	380 V	460 V	575 V	220-230 V	380-415 V	500 V	460 V	575 V
	50 Hz			60 Hz				50 Hz			60 Hz	
3.7	*96279245*	*96279283*	-	*96279263*	*96279308*	*96279283*	-	*96279245*	-	-	-	-
5.5	*96279246*	*96279284*	-	*96279264*	*96279309*	*96279284*	-	*96279246*	*96279295*	-	*96279295*	-
7.5	*96279247*	*96279285*	*96279330*	*96279265*	*96279310*	*96279285*	*96279330*	*96279247*	*96279296*	-	*96279296*	-
9.2	*96279248*	*96279286*	*96279331*	*96279266*	*96279311*	*96279286*	*96279331*	*96279248*	*96279297*	-	*96279297*	-
11	*96279249*	*96279287*	*96279332*	*96555758*	*96279312*	*96279287*	*96279332*	*96279249*	*96279287*	*96279340*	*96279287*	*96279340*
13	*96279250*	*96279288*	*96279333*	*96279268*	*96279313*	*96279288*	*96279333*	*96279250*	*96279288*	*96279341*	*96279288*	*96279341*
15	*96279251*	*96279289*	*96279334*	*96279269*	*96279314*	*96279289*	*96279334*	*96279251*	*96279289*	*96279342*	*96279289*	*96279342*

3) 1 x motor cable kit

4) 2 x motor cable kit

Windings, PE2 + PA

kW	DOL [5]		SD [6]	
	380-415 V	460 V	380-415 V	460 V
	50 Hz	60 Hz	50 Hz	60 Hz
7.5	*96279353*	*96279353*	-	-
9.2	*96279354*	*96279354*	-	-
11	*96279355*	*96279355*	*96279363*	*96279363*
13	*96279356*	*96279356*	*96279356*	*96279356*
15	*96279357*	*96279357*	*96279357*	*96279357*

5) 1 x motor cable kit

6) 2 x motor cable kit

MMS 6000

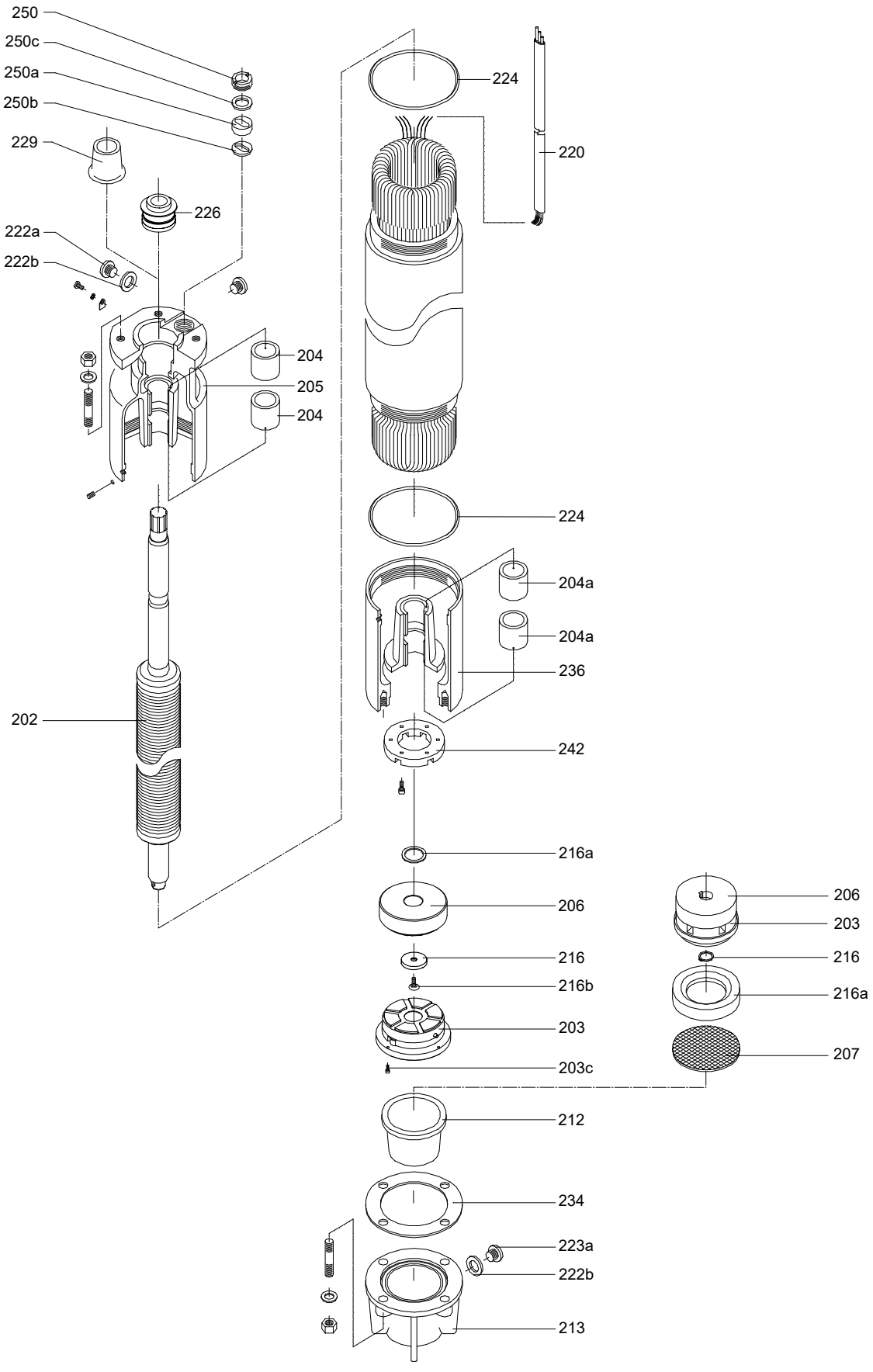
250
250c
250a
250b
229
226
222a
222b
204
205
204
202
224
220
224
204a
204a
236
242
216a
206
216
216b
203
203c
212
234
223a
222b
213
206
203
216
216a
207
TM027254

Bearing

Pos.	Kit No	96436078
	Description	18.5-37 kW
204	Bearing ring	4

Cable entry

Pos.	Description	With PT100 hole		Without PT100 hole	
		3 x 6 mm²	3 x 10 mm²	3 x 6 mm²	3 x 10 mm²
	Kit No	96537585	96537632	96537656	96537662
250	Cable gland flange	1	1	1	1
250a	Grommet	1	1	1	1
250b	Grommet disc	2	2	2	2
250c	Grommet disc	1	1	1	1
-	Screw M8 x 12	2	2	2	2
-	Screw for PT100	1	1	-	-

Cable joint

Pos.	Kit No	96546811
	Description	6/10 mm²
-	Cable joint	1

Lower bearing housing

Pos.	Description	DIN W.-Nr. 0.6025	DIN W.-Nr. 1.4401
	Kit No	96457624	96467280
236	Lower bearing housing	1	1
204a	Bearing ring	2	2
242	Upthrust spacer	1	1
242a	Screw	3	3

Miscellaneous

Pos.	Kit No		96441438
	Description		18.5-37 kW
207	Diaphragm cover		1
216	Retaining ring		1
216a	Disc	35/25 x 0.5	2
		35/25 x 0.3	1
		35/25 x 0.2	1
222a	Filling screw		1
223a	Air vent screw		1

Seal kit

Pos.	Kit No	96545321
	Description	3.7-37 kW
212	Diaphragm	1
222b	Sealing washer	2
224	O-ring	2
234	Gasket	1

Shaft seal

Pos.	Description	Ceramic/ carbon	SiC/SiC
	Kit No	96504966	96504967
226	Mechanical seal	1	1
227	Shoulder ring	1	1
228	Locking ring	1	1
228a	Screw	3	3
229	Sand shield	1	1

Thrust bearing

Pos.	Kit No	96525456
	Description	18.5-37 kW
203	Thrust bearing carbon pad	1 set
206	Rotating thrust bearing	1
216c	Retaining ring	1

MMS 6000

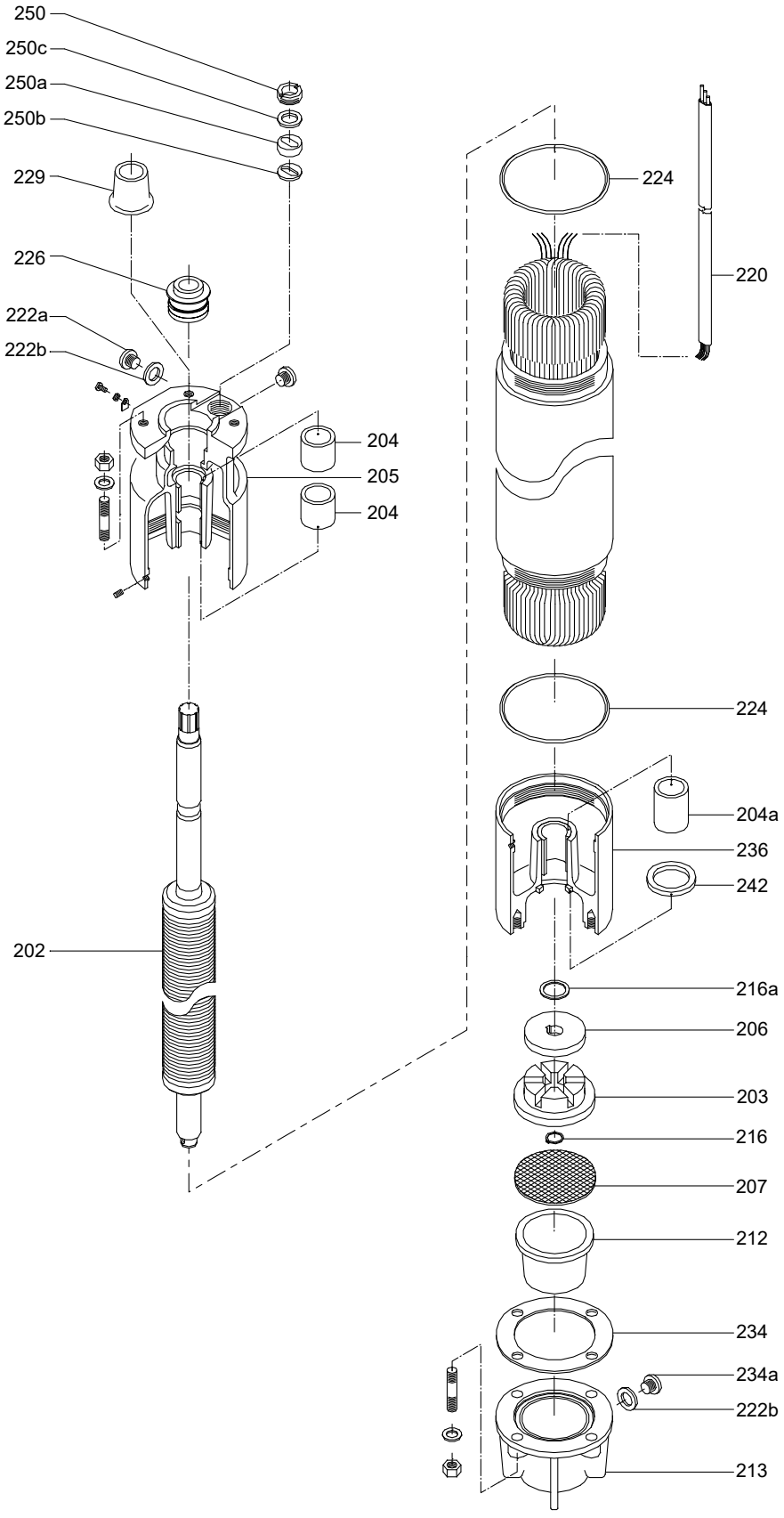
250
250c
250a
250b
229
226
222a
222b
204
205
204
202
224
220
224
204a
236
242
216a
206
203
216
207
212
234
234a
222b
213
TM027256

Motor cable

Pos.	Description		SD [1]			DOL [2]		SD [1]
	50 Hz	380-415 V, 500 V	220-230 V	380-415 V, 500 V		220-230 V	380 V-415 V, 500 V	220-230 V
	60 Hz	380 V, 460 V		460 V	380 V	220 V	380 V, 460 V	220 V
	kW	18.5-22.0	18.5-30.0	18.5-37	37	18.5-37.0	26-37	37
			6 mm^2				10 mm^2	
	Kit No		*96546825*				*96546827*	
220	Motor cable, round		1				1	
-	Strip		6				6	

1) 2 x motor cable kit

2) 1 x motor cable kit

Upper bearing housing

Pos.	Description	DOL [3]		SD [4]	
		DIN W.-Nr. 0.6025	DIN W.-Nr. 1.4401	DIN W.-Nr. 0.6025	DIN W.-Nr. 1.4401
	Kit No	*96506757*	*96521654*	*96506758*	*96521672*
205	Upper bearing housing	1	1	1	1
204	Bearing bush	2	2	2	2

3) 1 x cable joint kit

4) 2 x cable joint kit

Windings PVC

kW	DOL [5]						
	50 Hz			60 Hz			
	220-230 V	380-415 V	500 V	220 V	380 V	460 V	575 V
18.5	*96279252*	*96279290*	*96279335*	*96279270*	*96279315*	*96279290*	*96279335*
22	*96279253*	*96279291*	*96279336*	*96279271*	*96279316*	*96279291*	*96279336*
26	*96279254*	*96279292*	*96279337*	*96279272*	*96279317*	*96279292*	*96279337*
30	*96279255*	*96279293*	*96279338*	*96279273*	*96279318*	*96279293*	*96279338*
37	-	*96279294*	*96279339*	-	*96279319*	*96279294*	*96279339*

5) 1 x motor cable kit

kW	SD [6]						
	50 Hz			60 Hz			
	220-230 V	380-415 V	500 V	220 V	380 V	460 V	575 V
18.5	*96279252*	*96279290*	*96279335*	-	-	*96279290*	*96279335*
22	*96279253*	*96279291*	*96279336*	-	-	*96279291*	*96279336*
26	*96279254*	*96279292*	*96279337*	-	-	*96279292*	*96279337*
30	*96279255*	*96279293*	*96279338*	-	-	*96279293*	*96279338*
37	*96279439*	*96279294*	*96279339*	*96279274*	*96279319*	*96279294*	*96279339*

6) 2 x motor cable kit

Windings PE2 + PA

kW	DOL [1]			
	50 Hz		60 Hz	
	380-415 V	400-415 V	380 V	460 V
18.5	*96279358*	-	-	*96279358*
22	*96279359*	-	-	*96279359*
26	*96279360*	-	-	*96279360*
30	*96279361*	-	-	*96279361*
37	*96279362*	*96279267*	*96279374*	*96279362*

1) 1 x motor cable kit

kW	SD [2]			
	50 Hz		60 Hz	
	380-415 V	400-415 V	380 V	460 V
18.5	*96279358*	-	-	*96279358*
22	*96279359*	-	-	*96279359*
26	*96279360*	-	-	*96279360*
30	*96279361*	-	-	*96279361*
37	*96279362*	*96279267*	*96279374*	*96279362*

2) 2 x motor cable kit

MMS 6000

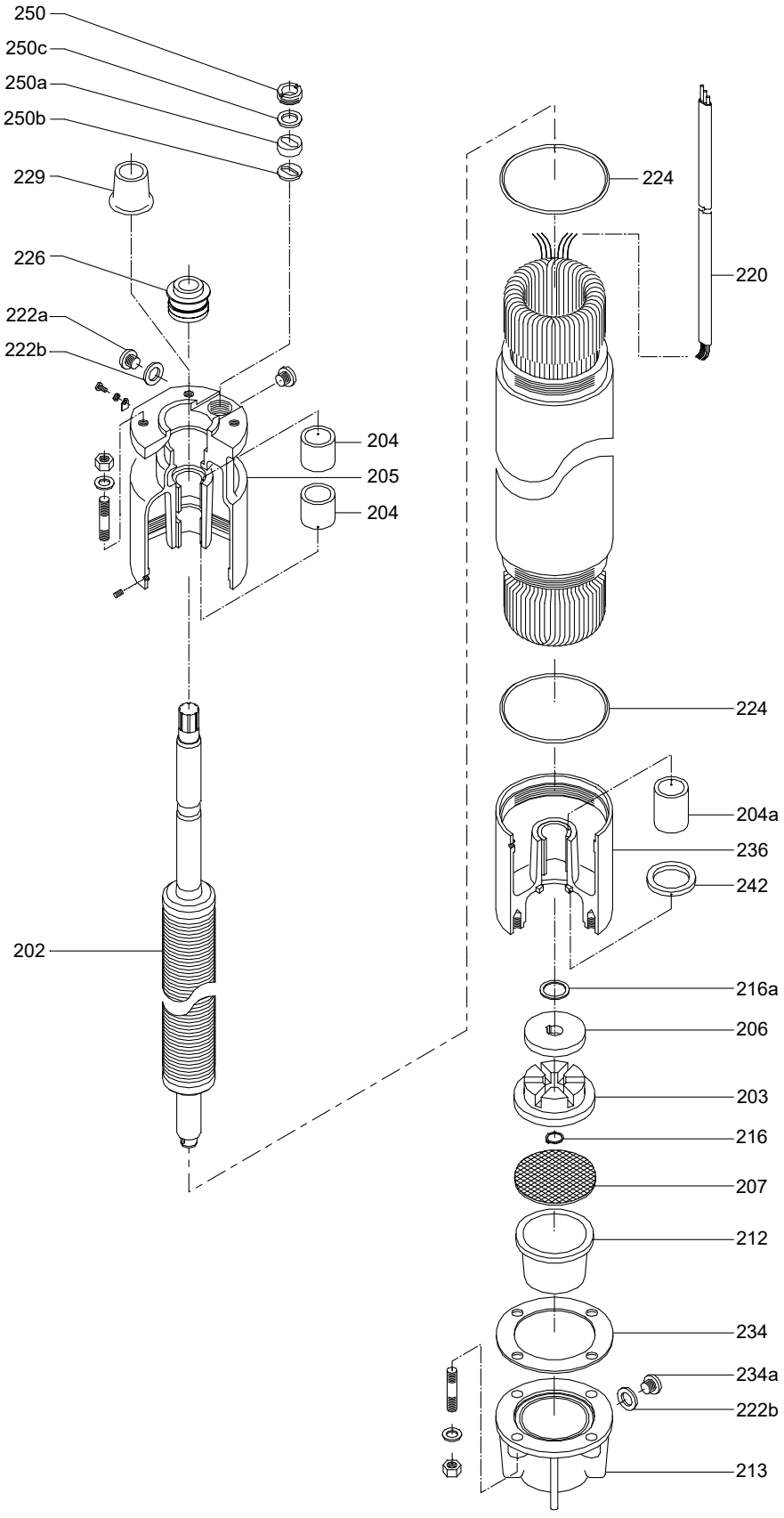
250
250c
250a
250b
229
226
222a
222b
204
205
204
202
224
220
224
204a
236
242
216a
206
203
216
207
212
234
234a
222b
213
TM027256

MMS 8000
50/60 Hz, 22-110 kW

Bearing

Pos.	Kit No	96436079
	Description	
204	Bearing ring	4

Cable entry

Pos.	Description	With PT100 hole			Without PT100 hole	
		10 mm²	16 mm²	25 mm²	10 mm²	16 mm²
	Kit No	96537665	96537636	96537637	96537692	96537699
247	Screw for PT100	1	1	1	-	-
248	Screw M8 x 20	2	2	2	2	2
250	Cable gland flange	1	1	1	-	-
250a	Grommet	1	1	1	-	-
250b	Grommet disc	2	2	2	2	2
250c	Ring	1	1	1	1	1
251	Cable gland flange	-	-	-	1	1
251a	Grommet	-	-	-	1	1

Cable joint

Pos.	Kit No	96546813
	Description	10/16/25 mm²
-	Cable joint	4

Lower bearing housing

Pos.	Description	DIN W.-Nr. 0.6025	DIN W.-Nr. 1.4401
	Kit No	96458142	96467288
204a	Bearing ring	2	2
236	Lower bearing housing	1	1
242	Upthrust spacer	1	1
242a	Screw	4	4

Miscellaneous

Pos.	Kit No		96436084
216a	Disc	35/45 x 0.5	-
		35/45 x 0.3	-
		35/45 x 0.2	-
222a	Filling screw		1
223a	Air vent screw		1

Seal kit

Pos.	Description	
	Kit No	96545326
212	Diaphragm	1
222b	Sealing washer	2
224	O-ring, 164.7 x 3.5	2
234	Gasket	2

Shaft seal

Pos.	Description	Ceramic/ carbon	SiC/SiC
	Kit No	***96524372***	***96524374***
226	Mechanical seal	1	1
227	Shoulder ring	1	1
228	Locking ring	1	1
228a	Screw	3	3
229	Sand shield	1	1

Thrust bearing

Pos.	Kit No	***96507237***
203	Thrust bearing	1
206	Thrust bearing, rotating part	1
216	Washer for M10	1
216b	Screw M10 x 16	1

Upper bearing housing

Pos.	Description	DOL [1]		SD [2]	
		DIN W.-Nr. 0.6025	DIN W.-Nr. 1.4401	DIN W.-Nr. 0.6025	DIN W.-Nr. 1.4401
	Kit No	***96520742***	***96527365***	***96520691***	***96529635***
205	Upper bearing housing	1	1	1	1
204	Bearing bush	2	2	2	2

1) 1 x cable entry kit

2) 2 x cable entry kit

MMS 8000

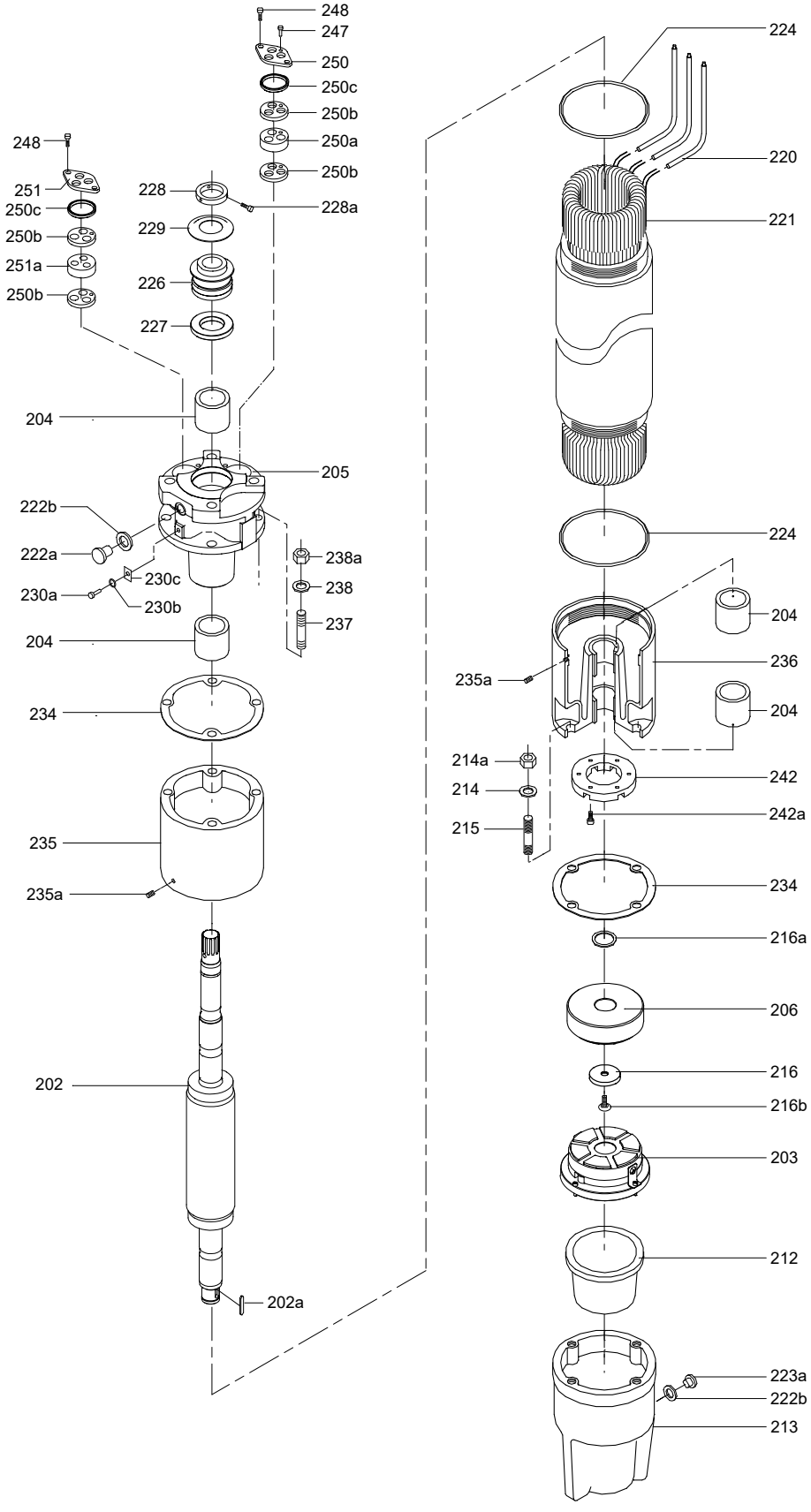
248
247
250
250c
250b
250a
250b
248
251
250c
250b
251a
250b
228
228a
229
226
227
204
205
222b
222a
230c
230a
230b
238a
238
237
204
234
235
235a
202
202a
224
220
221
224
204
236
235a
204
214a
214
215
242
242a
234
216a
206
216
216b
203
212
223a
222b
213
TM030486

Motor cable

Pos.	Description	SD [1]			DOL [2]			SD [1]			
	50 Hz	220-230 V	380-415 V, 500 V		220-230 V		380-415 V, 500 V	220-230 V			380-415 V, 500 V
	60 Hz	220 V	460 V, 575 V	380 V	220 V	380 V	460 V, 575 V	220 V		380 V	460 V, 575 V
	kW	22-30	22-45	22-37	22-37	22-63	22-75	37-75	37-63	45-110	55-110
		10 mm²			16 mm²						
	Kit No	*96546828*			*96546829*						
220	Motor cable, round	1			1						
-	Strip	6			6						

1) 2 x motor cable kit

2) 1 x motor cable kit

Pos.	Description	DOL [3]			
	50 Hz	220-230 V			380-415 V, 500 V
	60 Hz	220 V		380 V	460 V, 575 V
	kW	45-75	45-63	75-110	92-110
		25 mm²			
	Kit No	*96546840*			
220	Motor cable, round	1			
-	Strip	6			

3) 1 x motor cable kit

Windings PVC

kW	DOL [4]/SD [5]						
	220 V-230 V	380-415 V	500 V	220 V	380 V	460 V	575 V
	50 Hz			60 Hz			
22	*96279256*	*96279298*	*96279343*	*96279275*	*96279320*	*96279298*	*96279343*
26	*96279257*	*96279299*	*96279344*	*96279276*	*96279321*	*96279299*	*96279344*
30	*96279258*	*96279300*	*96279345*	*96279277*	*96279322*	*96279300*	*96279345*
37	*96279229*	*96279301*	*96279346*	*96279278*	*96279323*	*96279301*	*96279346*
45	*96279260*	*96279302*	*96279347*	*96279279*	*96279324*	*96279302*	*96279347*
55	*96279261*	*96279303*	*96279348*	*96279280*	*96279325*	*96279303*	*96279348*
63	*96279262*	*96279304*	*96279349*	*96279281*	*96279326*	*96279304*	*96279349*
75	-	*96279305*	*96279350*	*96279282*	*96279327*	*96279305*	*96279350*
92	-	*96279306*	*96279351*	-	*96279328*	*96279306*	*96279351*
110	-	*96279307*	*96279352*	-	*96279329*	*96279307*	*96279352*

4) 1 x motor cable kit

5) 2 x motor cable kit

Windings PE2 + PA

kW	DOL [1]/SD [2]			
	380-415 V	400-415 V [3]	380 V	460 V
	50 Hz		60 Hz	
22	*96279364*	*96279429*	*96279375*	*96279364*
26	*96279365*	*96279430*	*96279376*	*96279365*
30	*96279366*	*96279431*	*96279377*	*96279366*
37	*96279367*	*96279432*	*96279378*	*96279367*
45	*96279368*	*96279433*	*96279379*	*96279368*
55	*96279369*	*96279434*	*96279380*	*96279369*
63	*96279370*	*96279435*	*96279381*	*96279370*
75	*96279371*	*96279436*	*96279382*	*96279371*
92	*96279372*	*96279437*	*96279383*	*96279372*
110	*96279373*	*96279438*	*96279384*	*96279373*

1) 1 x motor cable kit

2) 2 x motor cable kit

3) Only for DOL, Australia.

MMS 8000

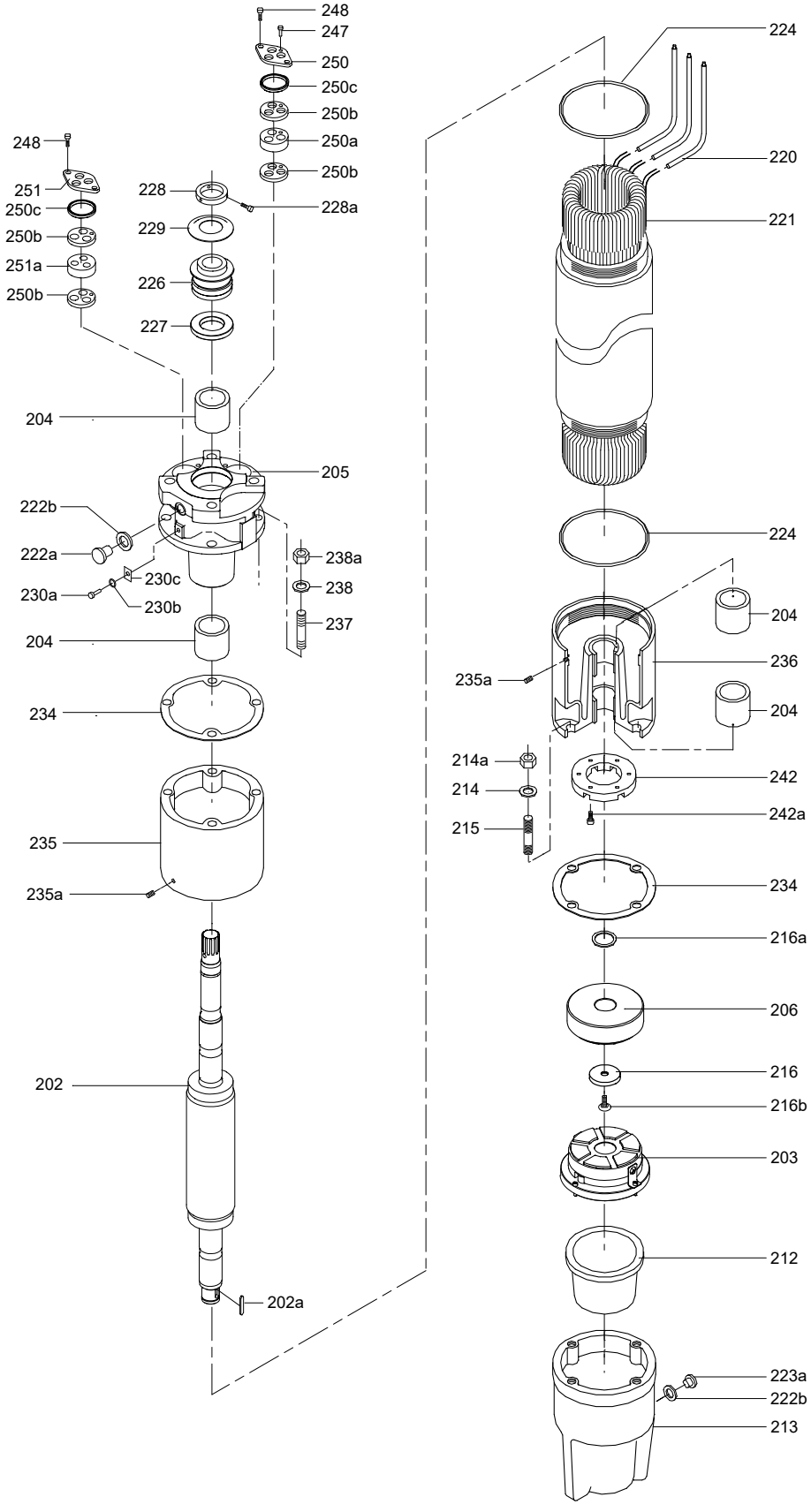
248
247
250
250c
250b
250a
250b
248
251
250c
250b
251a
250b
228
228a
229
226
227
204
205
222b
222a
230c
230a
230b
238a
238
237
204
234
235
235a
202
202a
224
220
221
224
204
236
235a
204
214a
214
215
242
242a
234
216a
206
216
216b
203
212
223a
222b
213
TM030486

MMS 10000

50/60 Hz, 75-190 kW

Bearing

Pos	Kit No	96436080
	Description	
204	Bearing ring	4

Cable entry

Pos.	Description	3 x 35 mm²	3 x 50 mm²
	Kit No	96545348	96545349
250	Cable gland flange	1	1
250a	Grommet	1	1
250b	Grommet disc	2	2
-	Screw M8 x 25	2	2

Cable joint

Pos	Kit No	96546816
	Description	35/50 mm²
-	Cable joint	1

Lower bearing housing

Pos.	Description	DIN W.-Nr. 0.6025	DIN W.-Nr. 1.4401
	Kit No	96458179	96279718
204a	Bearing ring	2	2
236	Lower bearing housing	1	1
242	Upthrust spacer	1	1
242a	Screw	4	4

Miscellaneous

Pos.	Kit No		96436085
216	Washer		1
216a	Disc	35/45 x 0.5	2
		35/45 x 0.3	1
		35/45 x 0.2	1
222a	Filling screw		1
223a	Air vent screw		1

Motor cable

Pos	Description	35 mm²	50 mm²
		SD [1]	DOL [2]
	Kit No	96546842	96546843
220	Motor cable, round	1	1
-	Strip	6	6

1) 2 x motor cable kit

2) 1 x motor cable kit

Seal kit

Pos	Kit No	96545328
	Description	
212	Diaphragm	1
222b	Sealing washer	2
224	O-ring	2
234	Gasket	2
234a	Gasket	2

Thrust bearing

Pos	Kit No	96507238
	Description	
203	Thrust bearing	1
206	Thrust bearing, rotating part	1
216	Washer for M10	1
216b	Screw M10 x 16	1

Upper bearing housing

Pos.	Description	DOL [3]		SD [4]	
		DIN W.-Nr. 0.6025	DIN W.-Nr. 1.4401	DIN W.-Nr. 0.6025	DIN W.-Nr. 1.4401
	Kit No	96547172	96279714	96547173	96279716
205	Upper bearing housing	1	1	1	1
204	Bearing bush	2	2	2	2

3) 1 x cable entry kit

4) 2 x cable entry kit

MMS 10000

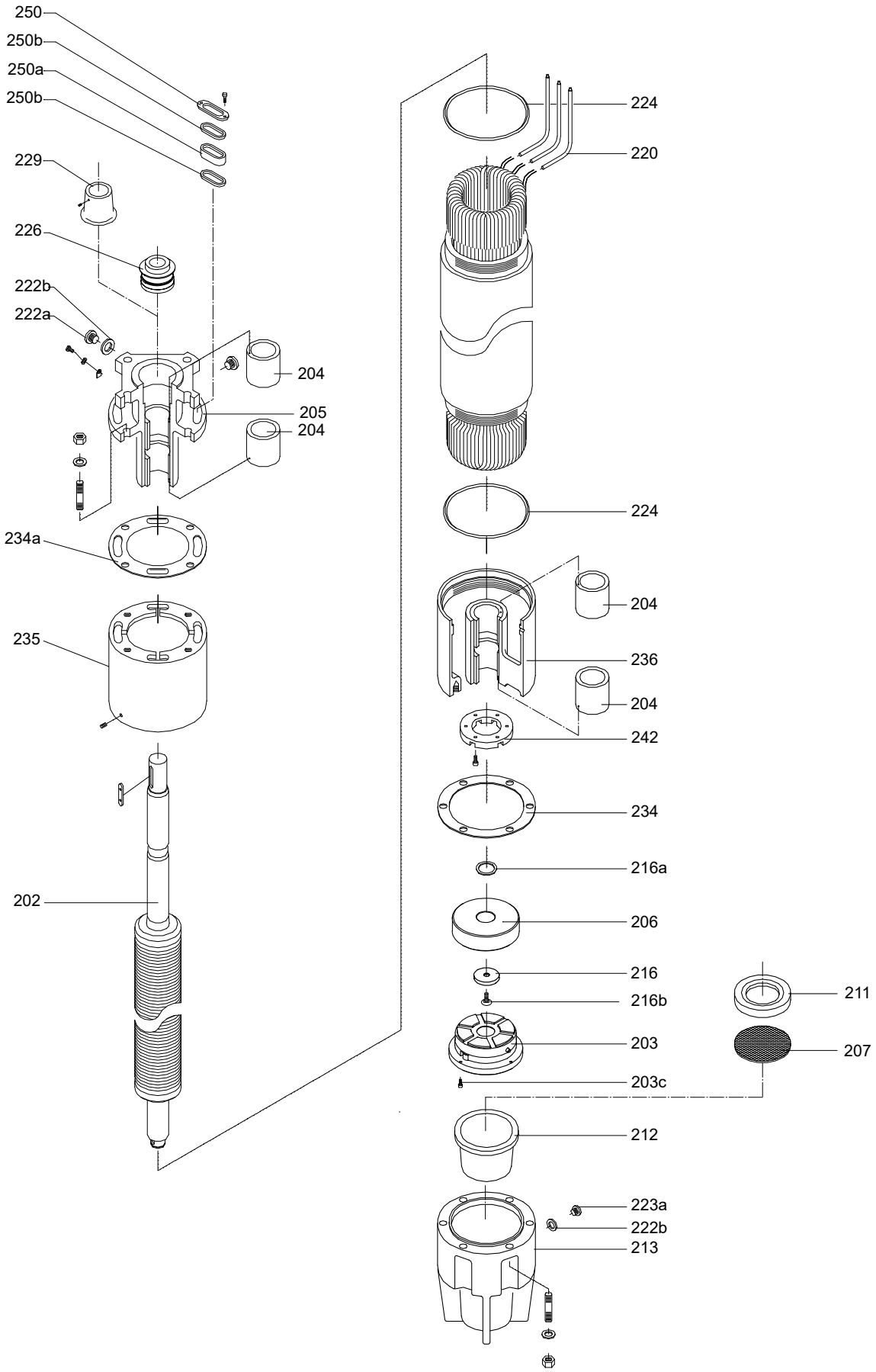
250
250b
250a
250b
229
226
222b
222a
204
205
204
234a
235
202
224
220
224
204
236
204
242
234
216a
206
216
216b
203
203c
212
223a
222b
213
211
207
TM027260

Shaft seal

Pos.	Description	Ceramic/ carbon	SiC/SiC
	Kit No	*96524375*	*96524376*
226	Mechanical seal	1	1
227	Shoulder ring	1	1
228	Locking ring	1	1
228a	Screw	3	3

Windings PVC

kW	DOL [1]/SD [2]						
	220-230 V	380-415 V	500 V	220 V	380 V	460 V	575 V
	50 Hz			60 Hz			
92	*96279385*	*96279390*	*96279418*	*96279387*	*96279408*	*96279390*	*96279418*
110	*96279386*	*96279391*	*96279419*	*96279388*	*96279409*	*96279391*	*96279419*
132	-	*96279392*	*96279420*	*96279389*	*96279410*	*96279392*	*96279420*
147	-	*96279393*	*96279421*	-	*96279411*	*96279393*	*96279421*
170	-	-	*96279422*	-	-	-	*96279422*
190	-	-	*96279423*	-	-	-	*96279423*

1) 1 x motor cable kit

2) 2 x motor cable kit

Windings PE2 + PA

kW	DOL [3]/SD [4]		
	380-415 V	380 V	460 V
	50 Hz	60 Hz	
92	*96279397*	*96279412*	*96279397*
110	*96279398*	*96279413*	*96279398*
132	*96279399*	*96279414*	*96279399*
147	*96279400*	*96279415*	*96279400*
170	*96279401*	*96279416*	*96279401*
190	*96279402*	*96279417*	*96279402*

3) 1 x motor cable kit

4) 2 x motor cable kit

MMS 10000

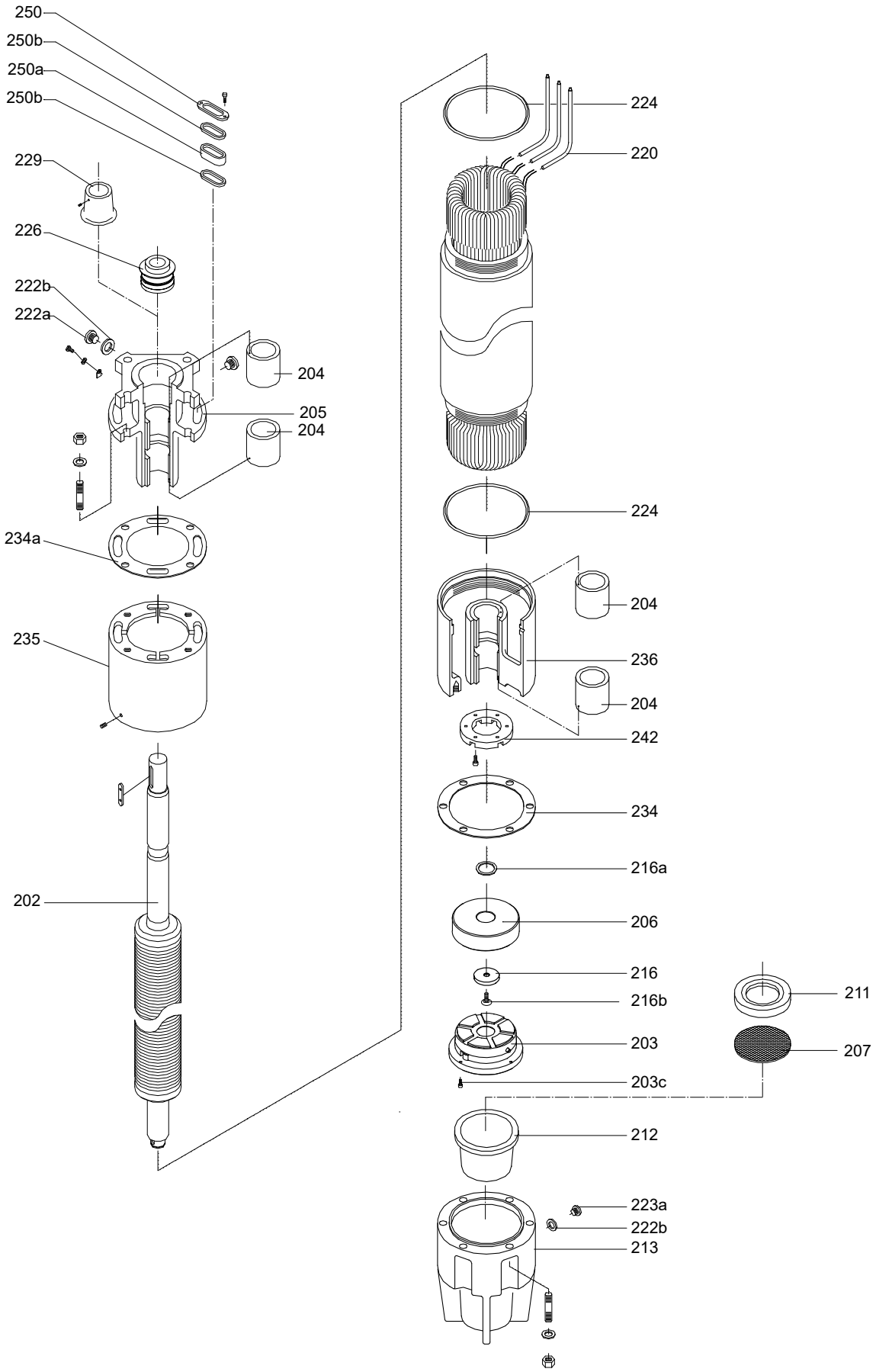
250
250b
250a
250b
229
226
222b
222a
204
205
204
234a
235
202
224
220
224
204
236
204
242
234
216a
206
216
216b
203
203c
212
223a
222b
213
211
207
TM027260

MMS 12000
50/60 Hz, 147-250 kW

Bearing

Pos.	Kit No	96436081
	Description	
204	Bearing ring	4

Cable entry

Pos.	Description	3 x 50 mm²	3 x 70 mm²
	Kit No	96545360	96545361
250	Clamping ring	1	1
250a	Grommet	1	1
250b	Grommet disc	2	2

Cable joint

Pos.	Kit No	96546818
	Description	50/70 mm²
-	Cable joint	1

Miscellaneous

Pos.	Kit No		96436086
	Description		
207	Diaphragm cover		
216	Retaining ring		
216a	Disc	0.5 mm	
		0.1 mm	
222a	Filling screw		
223a	Air vent screw		

Motor cable

Pos.	Kit No	96546843	96546844
	Description	50 mm²	70 mm²
220	Motor cable, round	1	1
-	Strip	6	6

Lower bearing housing

Pos	Description	DIN W.-Nr. 0.6025	DIN W.-Nr. 1.4401
	Kit No	96464745	96279719
204a	Bearing ring	2	2
236	Lower bearing housing	1	1
242	Upthrust spacer	1	1
242a	Screw	4	4

Seal kit

Pos.	Kit No	96545329
	Description	
212	Diaphragm	1
222b	Sealing washer	2
234	Gasket	3

Shaft seal

Pos.	Description	Ceramic/ carbon	SiC/SiC
	Kit No	*96524378*	*96524379*
226	Mechanical seal	1	1
227	Shoulder ring	1	1
228	Locking ring	1	1
228a	Screw	3	3
229	Sand shield	1	1

Thrust bearing

Pos.	Kit No	*96436076*
	Description	
203	Thrust bearing pad	1 set
203a	Carrier for thrust bearing pad-set	1
203b	Ball	8
206	Rotating thrust bearing	1
210	Floating thrust bearing disc	1

Upper bearing housing

Pos.	Description	DOL [1]		SD [2]	
		DIN W Nr. 0.6025	DIN W. Nr. 1.4401	DIN W. Nr. 0.6025	DIN W. Nr. 1.4401
	Kit No	*96549527*	*96279715*	*96549585*	*96279717*
205	Upper bearing housing	1	1	1	1
204	Bearing bush	2	2	2	2

1) 1 x motor cable kit

2) 2 x motor cable kit

Windings (pos. 221)

kW	PVC				PE2 + PA	
	DOL [3]/SD [4]					
	380-415 V	500 V	460 V	575 V	380-415 V	460 V
	50 Hz		60 Hz		50 Hz	60 Hz
147	*96279394*	*96279424*	*96279394*	*96279424*	*96279403*	*96279403*
170	*96279395*	*96279425*	*96279395*	*96279425*	*96279404*	*96279404*
190	*96279396*	*96279426*	*96279396*	*96279426*	*96279405*	*96279405*
220	-	*96279427*	-	*96279427*	*96279406*	*96279406*
250	-	*96279428*	-	*96279428*	*96279407*	*96279407*

3) 1 x motor cable kit

4) 2 x motor cable kit

MMS 12000

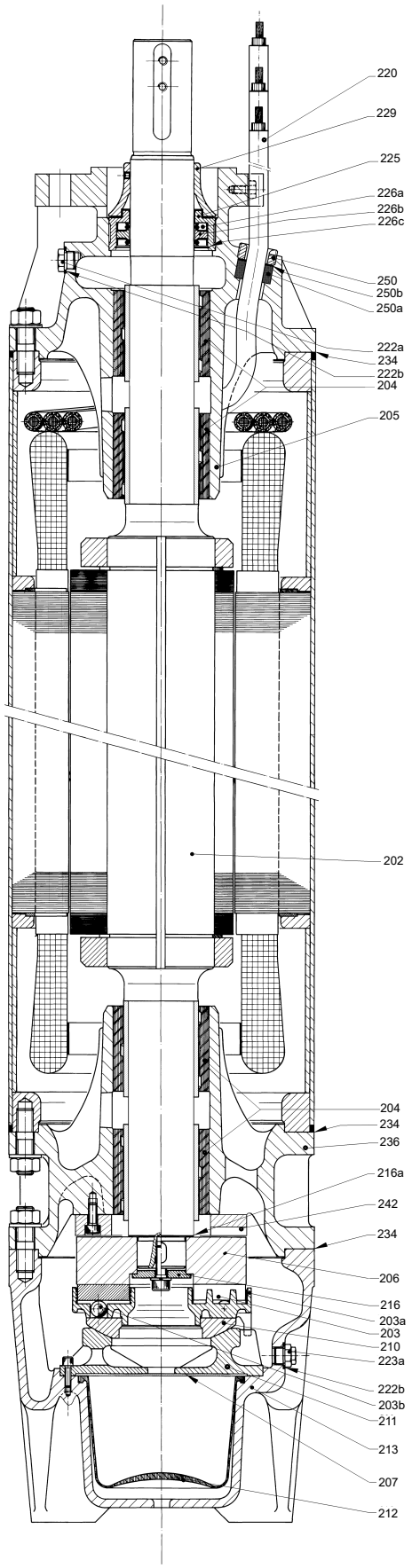

TM018448

47. MQ, RMQ

MQ

50/60 Hz

Clamp

Pos.	Description/kit No	96450697
92	Clamp	1
93	Screw	1
93a	Washer	1
94	Self-locking nut	1

End cover

Pos.	Description/kit No	96488398
51	End cover	1
43	Tank cover	1
43a	Screw	1
152	Screw	6
152a	Spring washer	6
152b	Screw	4
152c	Spring washer	4
44	O-ring	1
52	O-ring	1

Fittings

Pos.			G 1"	NPT 1"
	Kit No		96577720	96634763
	Description		PPO	PPO
7	Plug		2	2
11a	O-ring	13.1 x 2.6	2	2
100	Union		1	1
100a	Adjustable discharge port		1	1
100b	O-ring	30.0 x 4.0	1	1
100c	O-ring	36.0 x 3.0	1	1
101	Suction port with non-return valve		1	1

Flow sensor

Pos.	Description/kit No	96450698
184	Cover with sensor	1
166a	Screw	6
185	Turbine wheel	1
185a	Washer	1
186	Turbine shaft	1
187	O-ring 49.2 x 3.5	1

Hydraulic parts

Pos.	Pump type	All	MQ 3-35	MQ 3-45
	Frequency	50 Hz	60 Hz	60 Hz
	Description/kit No	96525909	96525930	96525931
4	Chamber	4	2	3
4a	Empty chamber	1	2	1
6	Inlet part	1	1	1
10	Valve seat	1	1	1
11	O-ring 12.3 x 3.5	1	1	1
11b	Spring	1	1	1
13	O-ring 31.3 x 3.5	1	1	1
14	Self-priming part	1	1	1
37	O-ring 105.0 x 1.5	5	5	5
37a	O-ring 164.5 x 5.3	1	1	1
37b	O-ring 110.7 x 3.5	1	1	1
49	Impeller	4	2	3
66	Washer	1	1	1
66a	Lock washer	1	1	1
67	Nut	1	1	1

O-ring

Pos.	Description/kit No		96526628
7	Plug		2
10	Valve seat		1
11	O-ring	12.3 x 3.5	1
11a	O-ring	13.1 x 2.6	2
11b	Spring		1
13	O-ring	31.3 x 3.5	1
37	O-ring	105.0 x 1.5	4
37a	O-ring	164.5 x 5.3	2
37b	O-ring	110.7 x 3.5	1
38	O-ring	25 x 3	1
40	O-ring	18.7 x 2.6	2
44	O-ring	36.0 x 3.0	1
52	O-ring	98.0 x 3.5	1
53	O-ring	88.3 x 5.3	1
61a	O-ring	9.9 x 2.6	2
63	O-ring	28.2 x 3.5	1
64	O-ring	31.3 x 3.5	1
100b	O-ring	30.0 x 4.0	1
100c	O-ring	36.0 x 3.0	1
101a	O-ring	17.0 x 3.5	1
165	O-ring	158.4 x 2.6	1
174b	O-ring	13.1 x 2.6	1
187	O-ring	49.2 x 3.5	1

Pressure switch

Pos.	Description	MQ 3-25	MQ 3-35	MQ 3 45
	Kit No	*96526654*	*96526653*	*98652420*
174a	Pressure switch	1	1	1
174b	O-ring	1	1	1
175	Screws	3	3	3

Shaft seal

Pos.	Description/kit No		*96450696*
37	O-ring	105.0 x 1.5	5
37a	O-ring	164.5 x 5.3	1
37b	O-ring	110.7 x 3.5	1
66	Washer		1
66a	Lock washer		1
67	Nut		1
102	Washer		1
103	Stationary part		1
104	Rotating part		1

Terminal box connection

Pos.	Description/kit No	*96488399*
164	Terminal box cover	1
165	O-ring 158.4 x 2.6	1
166	Screw	4

MQ 3-45 Model B

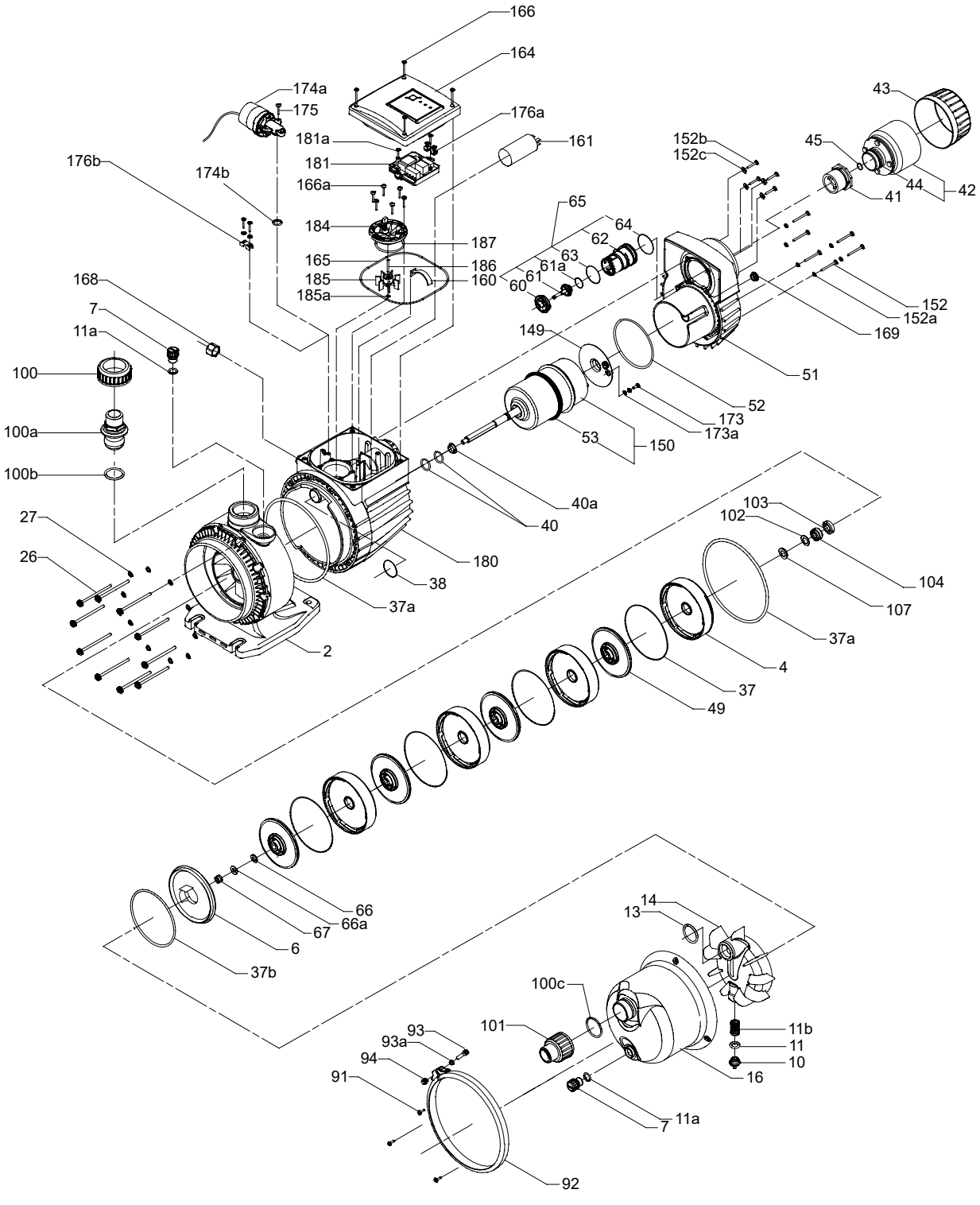

(until week 4, 2009)

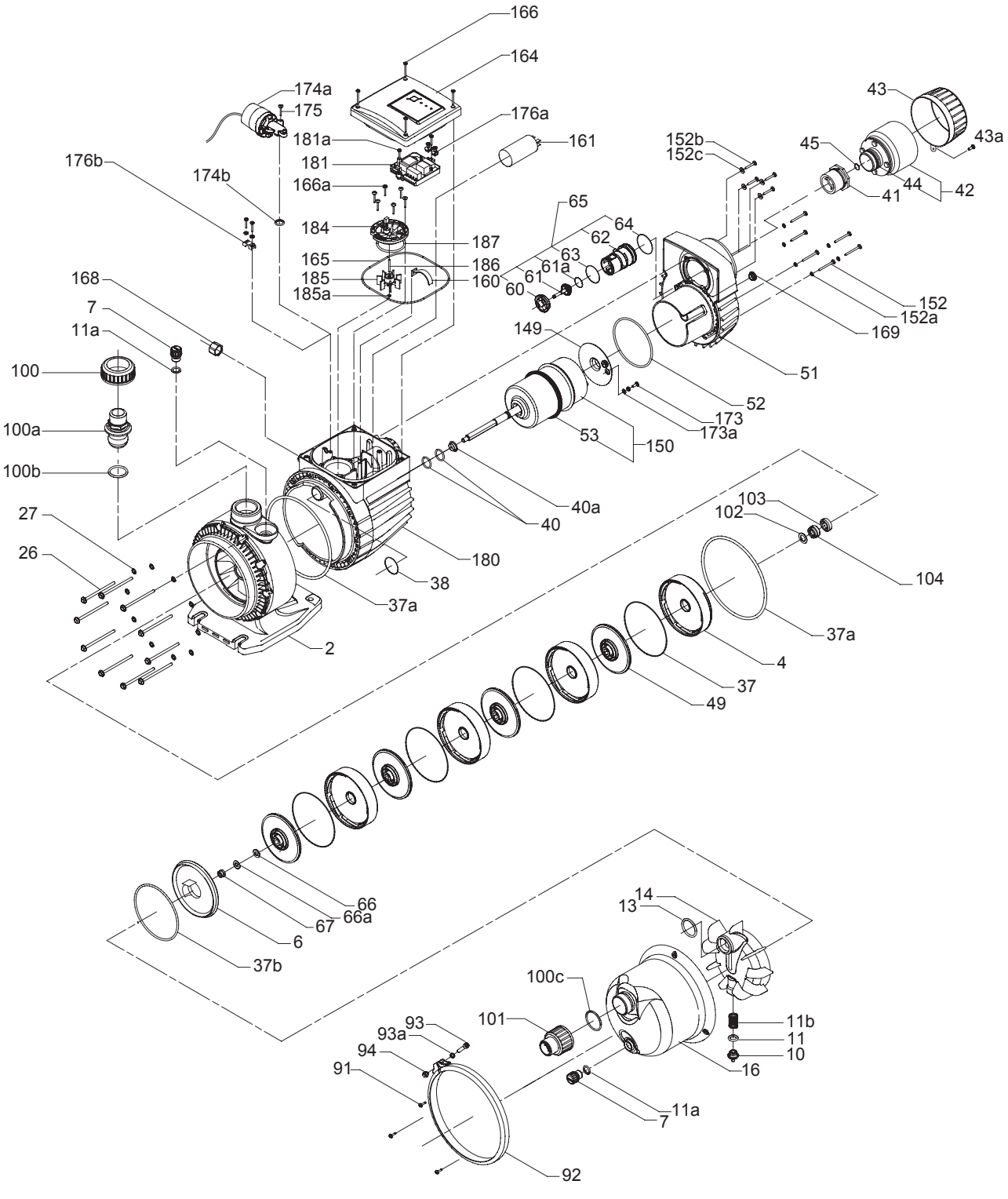

(from week 4, 2009)

Motor

Pos.	Pump type	MQ 3-35 115 V	MQ 3-45 115 V	MQ 3-25/35 230 V	MQ 3-45 230 V	MQ 3-35 230 V	MQ 3-45 230 V	MQ 3-25 230 V
	Frequency	**60 Hz**	**60 Hz**	**50 Hz**	**50 Hz**	**60 Hz**	**60 Hz**	**50 Hz**
	Kit No	***96488396***	***96488397***	***96488391***	***96488392***	***96489277***	***96489276***	***98916994***
40	O-ring	2	2	2	2	2	2	2
40a	O-ring retainer	1	1	1	1	1	1	1
53	O-ring	1	1	1	1	1	1	1
66	Washer	1	1	1	1	1	1	1
66a	Lock washer	1	1	1	1	1	1	1
67	Nut	1	1	1	1	1	1	1
150	Motor unit	1	1	1	1	1	1	1
160	Clip	1	1	1	1	1	1	1
161	Capacitor, 12.5 µF	-	-	1	1	-	-	1
161	Capacitor, 40 µF	1	1	-	-	1	1	-

Pos.	Pump type	MQ 3-35 AISI 304/416 230 V	MQ 3-45 AISI 304/416 230 V
	Frequency	**50 Hz**	**50 Hz**
	Kit No	***96608428***	***96608429***
40	O-ring	2	2
40a	O-ring retainer	1	1
53	O-ring	1	1
66	Washer	1	1
66a	Lock washer	1	1
67	Nut	1	1
150	Motor unit with AISI 304/416 shaft	1	1
160	Clip	1	1
161	Capacitor, 12.5 µF	1	1

Drain plug

Pos.	Description/kit No	***96457923***
7	Plug	2
11a	O-ring 13.1 x 2.6	2

Electronic parts

Pos.	Voltage	230 V	115 V	230 V
	Frequency	**50 Hz**	**60 Hz**	**60 Hz**
	Kit No	***96525934***	***96525932***	***96526828***
164	Terminal box cover	1	1	1
181	Electronic unit	1	1	1
181a	Screw	2	2	2

Spare parts and bulk parts

Capacitor

Pos.	Capacitor size	12.5 µF	40 µF
	Kit No	***96590742***	***97523217***
161	Capacitor	1	1

Motor stool

Pos.	Description/kit No	***96590739***
2	motor stool	1

Non-return valve

Pos.	Description/kit No	***96526663***
65	Non-return valve complete	1

Pump cover

Pos.	Description/kit No	***96590745***
16	Pump cover	1

Tank

Pos.	Description/kit No	***98893507***
42	Pressure tank including O-ring	1

Motor housing

Pos.	Description/kit No	***98664813***
180	Motor housing MQ model B	1

MQ 3-45 Model B

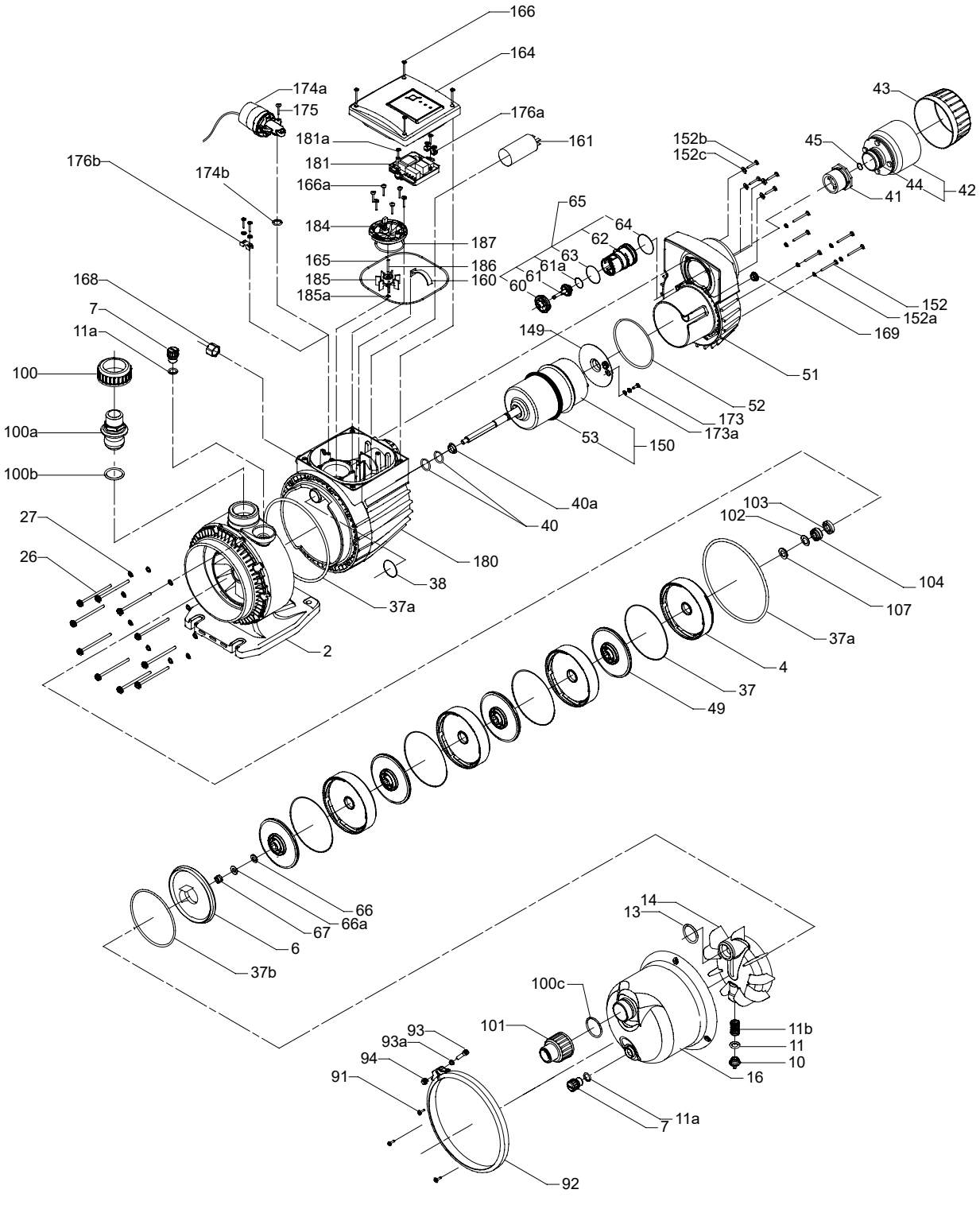

(until week 4, 2009)

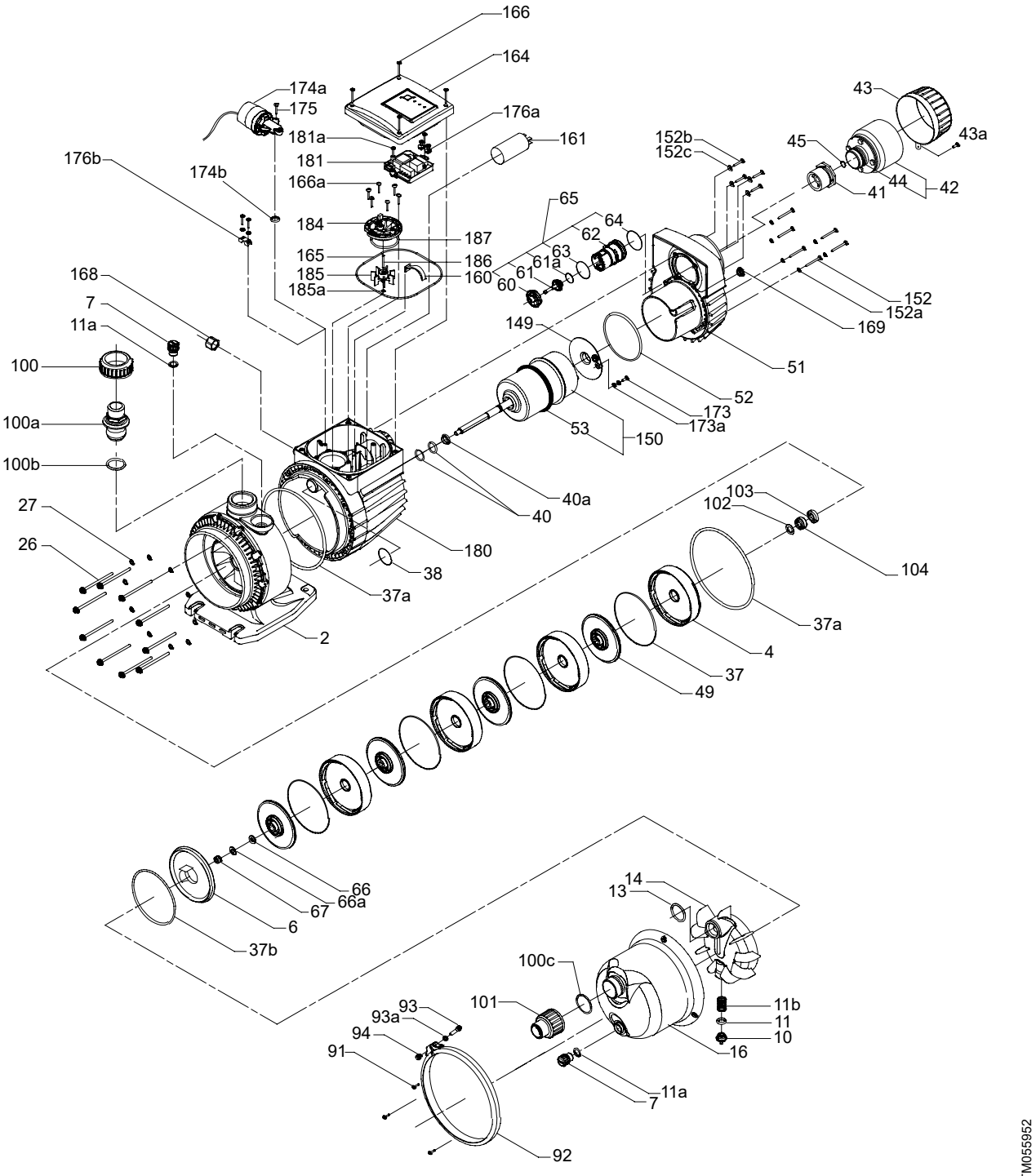

(from week 4, 2009)

RMQ

Control box

Pos.	Description/kit No	RMQ A	RMQ B
		96603590	*96603591*
501	Control box complete	1	1

Float valve

Pos.	Description	Manufactured before 1 April 2009	Manufactured after 1 April 2009
		96961201	*97505627*
409	Float valve	1	1
410	3/4" hose	1	-
420	Steel angle	1	-

Housing

Pos.	Description/kit No	*96603580*
403	Housing	1
404	Wall-mounting fitting	1
405	Back plate	1
406	Plug	1
408	Strap	1
425	Fixing plate for pump	1
-	Eyelet	1

Internal water tank

Pos.	Description/kit No	*96603568*
401	Internal water tank	1
409	Float valve	1
410	3/4" inlet hose	1
420	Steel angle	1
424	Reed relay	1

Three-way valve

Pos.	Description/kit No	*96603585*
411	Motor	1
412	Three-way valve + fittings	1

Service parts

Motor for three-way valve

Pos.	Description/kit No	*96603584*
411	Motor for three-way valve	1

Hose

Pos.	Description/kit No	*96603583*
413	1" hose	1

Level sensor

Pos.	Description/kit No	*96603587*
460	Level sensor, RMQ A	1

Level switch

Pos.	Description/kit No	*96603588*
460	Level switch, RMQ B	1

Reed relay

Pos.	Description/kit No	*96603586*
424	Reed relay	1

Float valve

Pos.	Description/kit No	*97505627*
409	Float valve	1
423	Seal	1

RMQ

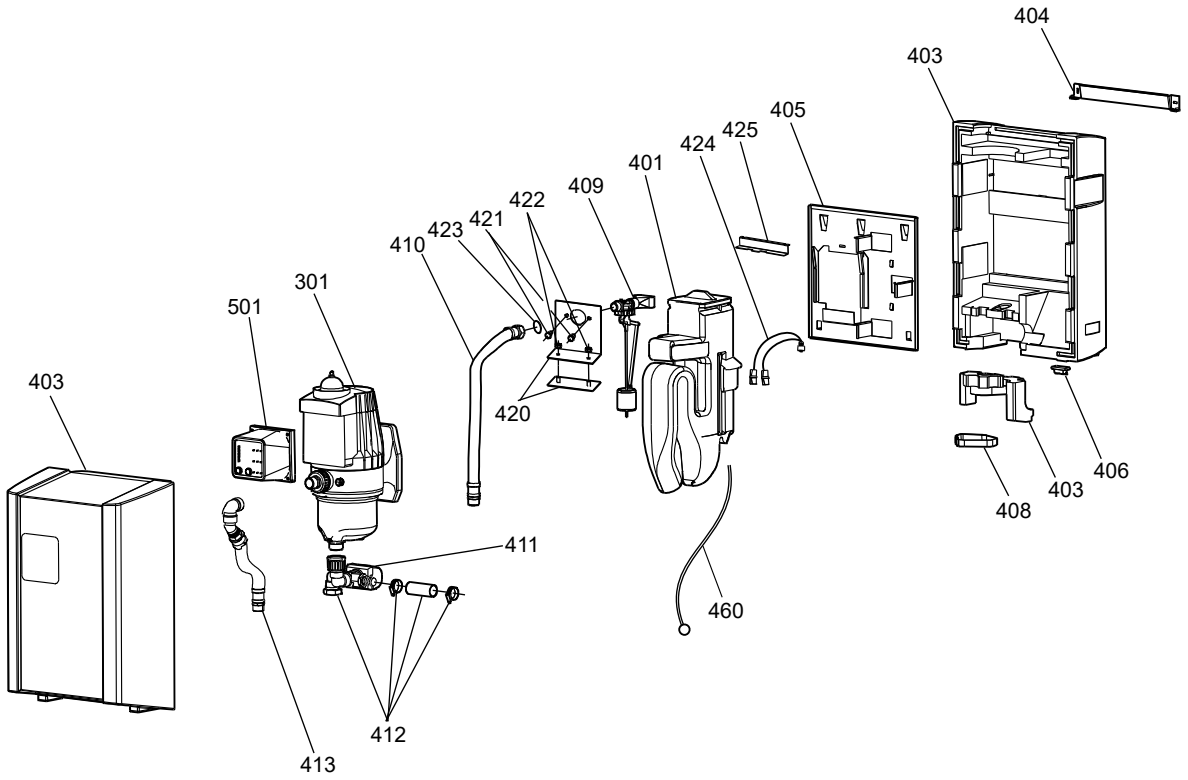
404
403
405
425
424
401
409
422
421
423
410
301
501
403
420
411
460
403
406
408
412
413
TM026455

48. MS

MS 402

50/60 Hz, 0.37-2.2 kW

Seal kit

Pos.	Description		Metric	UNF
	Kit No		*96558088*	*96558241*
2a	Stop ring		1	1
5a	Bearing with bellows, NBR		1	1
21	Nut, M8		4	-
	Nut, 5/16"-24 UNF		-	4
22	Staybolt	M8 x M8	4	-
		M8 x 5/16"-24 UNF	-	4
25	Cover plate		1	1
25a	Screw M4 x 8		3	3
27	Sand shield		1	1
74	Screw M4 x 8, with gasket		1	1

MS 402

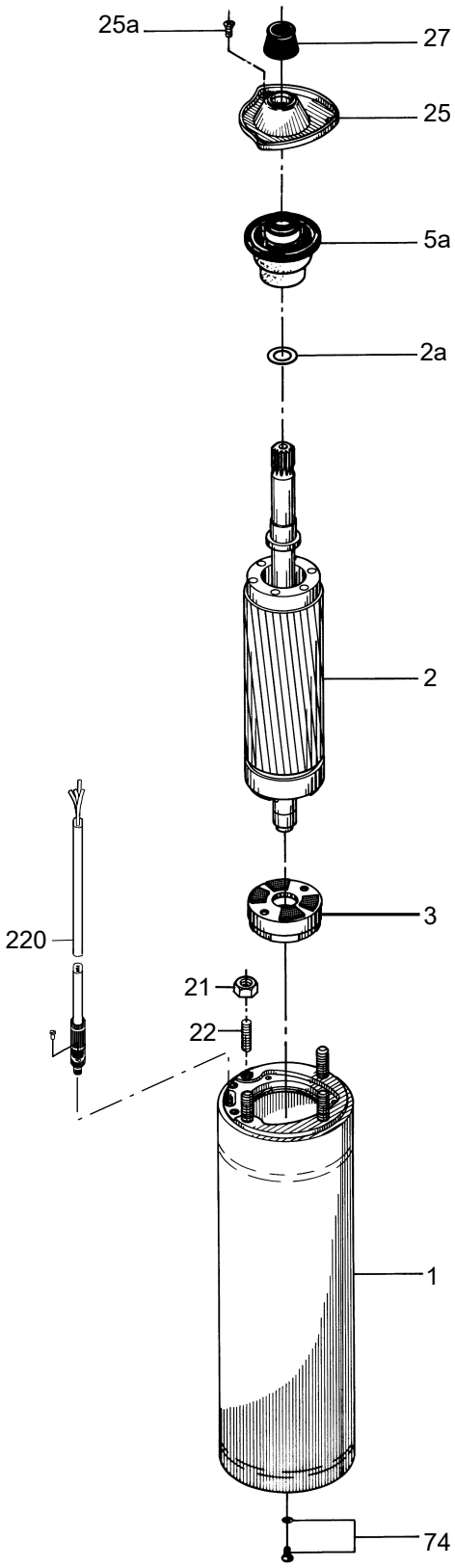

MS6

50/60 Hz, 3.7-30 kW

Bearing retainer

Pos.	Description	3.7 - 9.2 kW		11-30 kW	
		Graphite	WC	Graphite	WC
	Kit No	***96163683***	***96163685***	***96163684***	***96163685***
205	Bearing retainer D-end cpl. 35	1	-	-	-
	Bearing retainer D-end cpl. 50	-	-	1	-
	Bearing retainer D-end cpl. SiC 30	-	1	-	1
236	Bearing retainer N-end cpl.	1	1	1	1
236a	Screw w/cup point	2	2	2	2

Cable

Pos.	Description	Lenght [m]	3 x 4 mm^2 + 1 G 4 mm^2	3 x AWG 8 + 1 G AWG 8	4 x 1 x AWG 8	3 x 1 x AWG 8
220	Cable with plug	3	-	-	*96163692*	-
		5	*96163690*	*96163691*	-	*96163693*
		8	-	-	-	*96163859*
		10	*96163836*	*96163847*	-	-
		15	*96163837*	*96163848*	-	-
		20	*96163838*	*96163849*	-	-
		25	*96163839*	*96163850*	-	-
		30	*96163840*	*96163851*	-	-
		40	*96163841*	*96163852*	-	-
		50	*96163842*	*96163853*	-	-
		60	*96163843*	*96163854*	-	-
		67	-	-	*96163858*	-
		70	*96163844*	*96163855*	-	-
		80	*96163845*	*96163856*	-	-
		100	*96163846*	*96163857*	-	-

Diaphragm

Pos.	Description	NBR	FKM
	Kit No	***96163863***	***96163921***
212	Diaphragm	5	5

Filter

Pos.	Description	3.7 - 30 kW
	Kit No	***96163923***
207	Filter	5

O-ring

Pos.	Description	NBR	FKM
	Kit No	***96163674***	***96163675***
220a	O-ring 24 x 2.0 FKM	1	1
222b	O-ring 11 x 2 FKM	1	1
224	O-ring 128 x 3.0	2	2
231	O-ring 68 x 2.0	1	1

Shaft seal

Pos.	Description	Ceramic /carbon	SiC/SiC
	Kit No	***96163671***	***96163672***
226a	Shaft seal, stationary	1	1
226b	Shaft seal, rotating	1	1
229	Sand shield (FKM)	1	1
231	O-ring 66 x 2.0 FKM	1	1
232	Lip seal FKM	1	1

Shaft seal housing

Pos.	Description	1.4301	1.4539
	Kit No	***96163870***	***96300021***
226	Shaft seal housing	1	1

Thrust bearing

Pos.	Description	3.7 - 9.2 kW	11-30 kW
	Kit No	***96163686***	***96163687***
203	Thrust bearing, stationary	1	1
206	Thrust ring, rotating	1	1
209	Turbular pin	1	1
215	Screw countersunk	1	-
	Screw w/cup point	-	2
236a	Screw w/cup point	2	2
242	Upthrust spacer 7.5 kN (27.5 kN model B)	1	1
	Upthrust spacer (27.5 kN model A)	-	1

Thrust ring support, model A

Pos.	Description	3.7 - 9.2 kW	11-30 kW
	Kit No	***96163688***	***96163689***
208	Thrust ring support	1	1

Thrust ring support, model B

Pos.	Description	3.7 - 9.2 kW	11-30 kW
	Kit No	***96163919***	***96163920***
208	Thrust ring support, cone	1	1
216d	O-ring 27.5 x 3.0 NBR	1	-
	O-ring 17.0 x 4.0 NBR	-	1

Valve

Pos.	Description	NBR	FKM
	Kit No	***96163922***	***96300030***
222	Valve cpl.	5	-
222	Plug M12 CPL.R	-	5
222b	Valve cpl.	5	5

3.7-9.2 kW

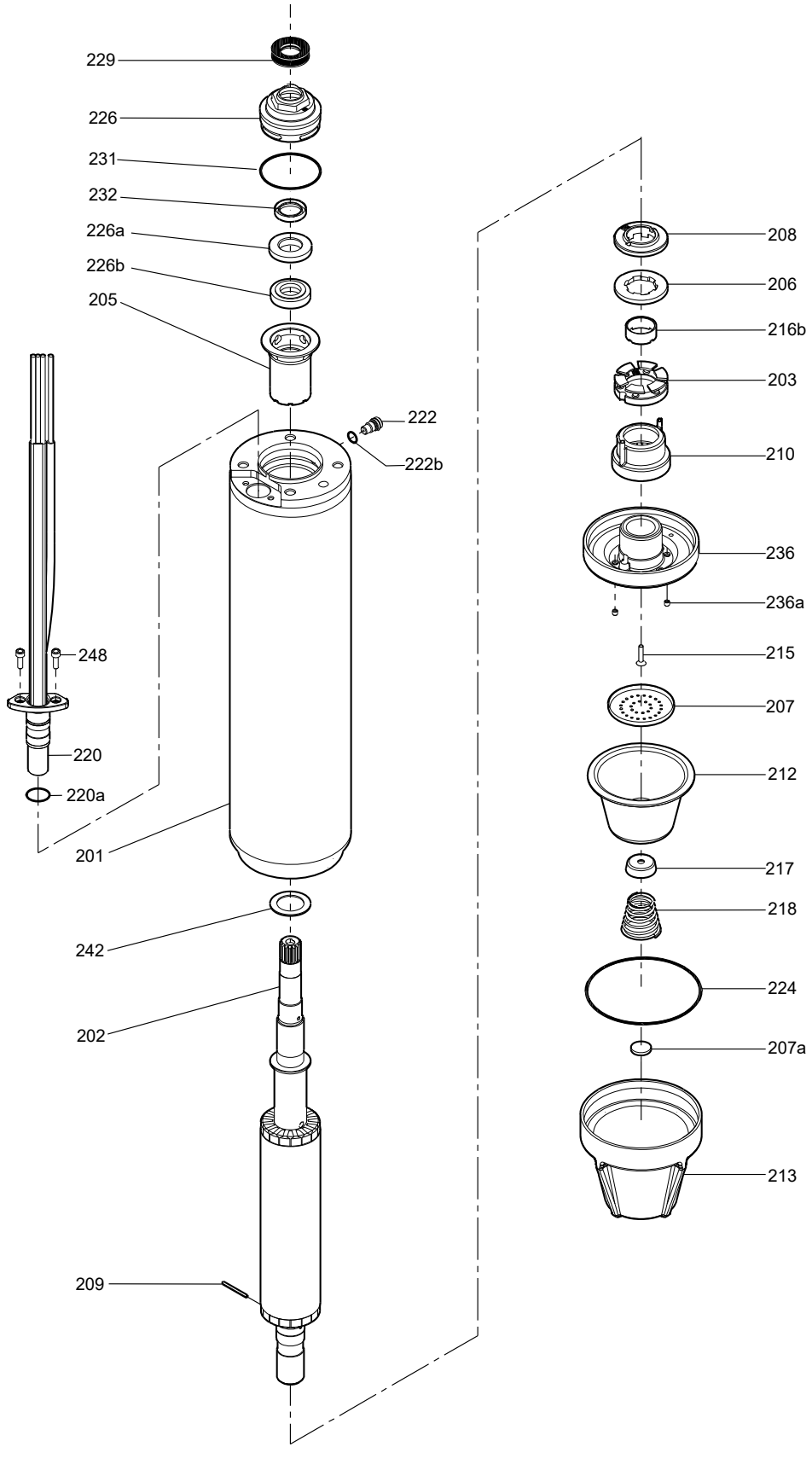

Model A

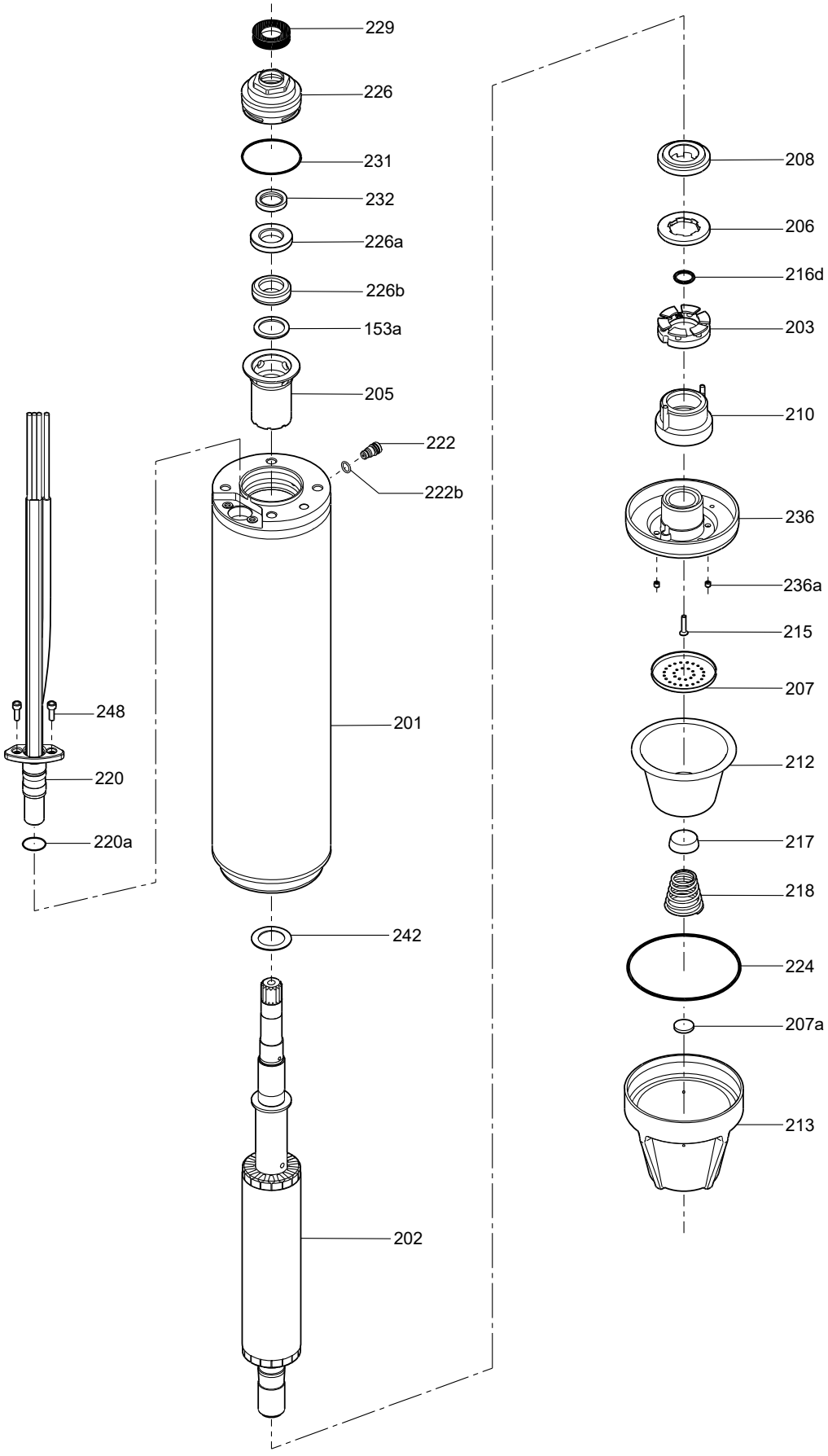
229
226
231
232
226a
226b
153a
205
222
222b
201
242
202
248
220
220a
208
206
216d
203
210
236
236a
215
207
212
217
218
224
207a
213
TM043716

Model B

11-30 kW

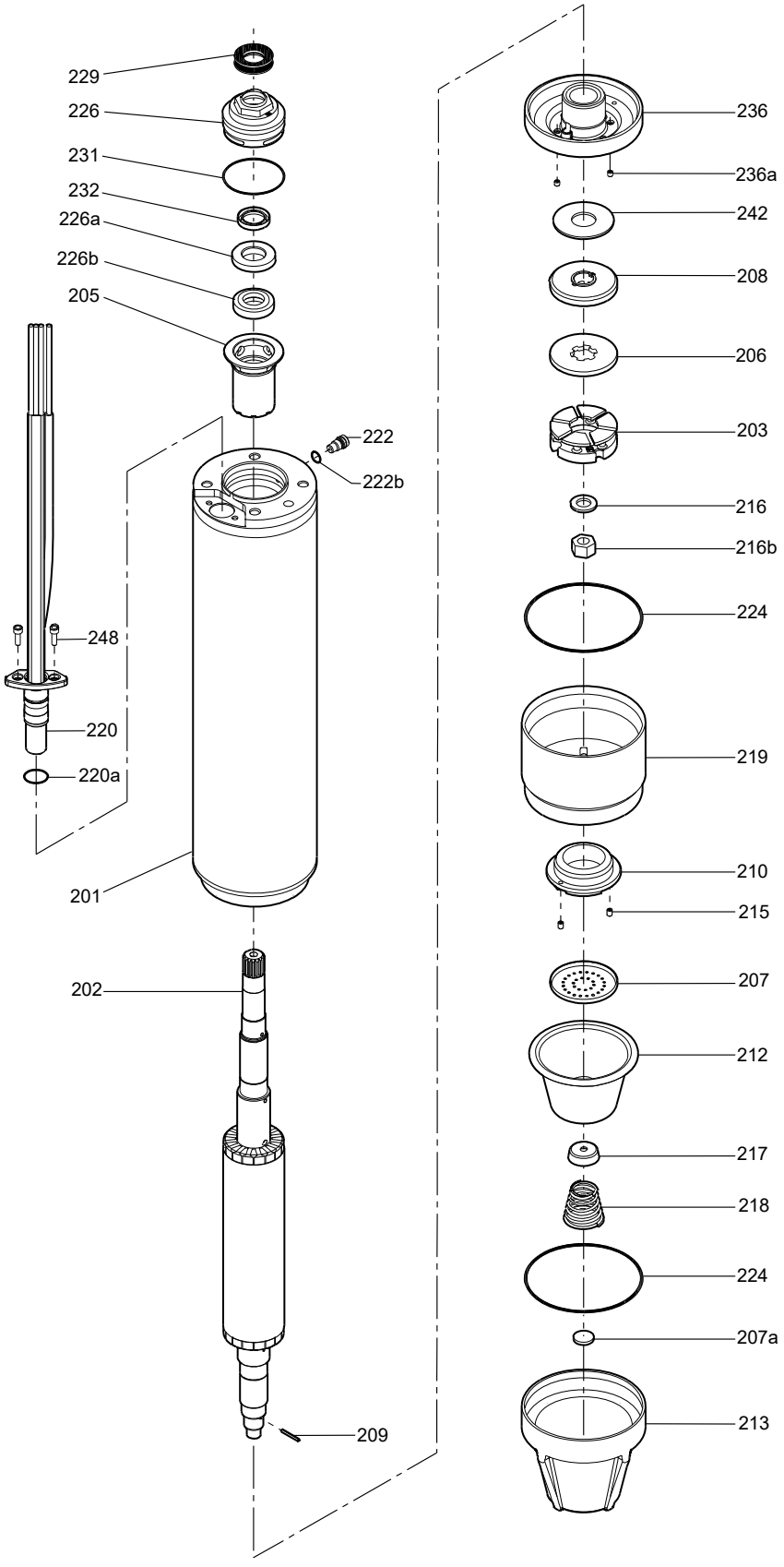

Model A

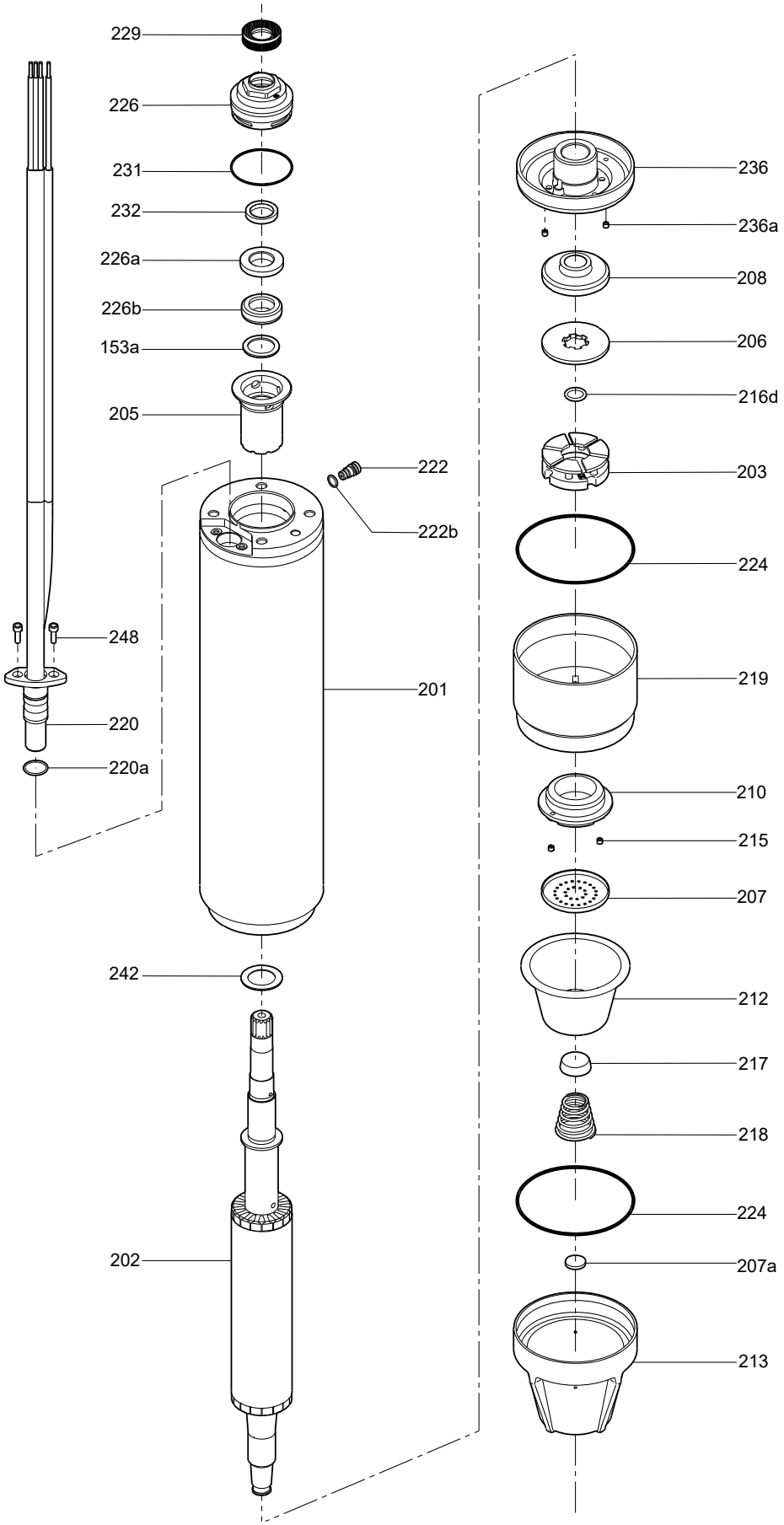
229
226
231
232
226a
226b
153a
205
222
222b
248
201
220
220a
242
202
236
236a
208
206
216d
203
224
219
210
215
207
212
217
218
224
207a
213
TM043717

Model B

MS 4000

50/60 Hz, 0.75 - 7.5 kW

Radial bearing

Pos.	Description	0.75 - 2.2 kW	3.0 - 5.5 kW	7.5 kW
	Kit No	*96558320*	*96558321*	*96558322*
4	Radial bearing	1	1	1
5	Bearing pipe	1	1	1

Seal kit

Pos.	Description	Seal faces / rubber	Tungsten carbide/ Al_2O_3	SiC/SiC	SiC/SiC
	Kit No		*96558323*	*96558324*	*96558325*
12	Diaphragm	NBR	1	1	-
		FKM	-	-	1
22c	O-ring 4 x 1	NBR	1	1	-
		FKM	-	-	1
24	O-ring 40 x 2	NBR	1	1	1
		FKM	-	-	-
25	Shaft seal housing		1	1	1
27	Spline protector	NBR	1	1	-
		FKM	-	-	1
28	Supporting ring		1	1	1
29	Sand shield	NBR	1	1	-
		FKM	-	-	1
30	Spring		1	1	1
31	Supporting ring		1	1	1
32	Seal ring, upper	NBR	1	-	-
		FKM	-	1	1
34	Seal ring, lower	FKM	1	1	1
	O-ring for supply cable	15 x 1.5, NBR	2	2	-
		14.1 x 1.6, FKM	-	-	2

Staybolt

Pos.	Description		Metric	Metric R version	UNF	UNF R version
	Kit No		*96558242*	*96558243*	*96558244*	*96558245*
21	Nut	M8	4	4	-	-
		5/16" UNF	-	-	4	4
22	Staybolt	M8 x M8	3	3	-	-
		M8 x 5/16" UNF	-	-	3	3
22a	Staybolt	M8 x M8	1	1	-	-
		M8 x 5/16" UNF	-	-	1	1
22b	Cheese-head screw M4 x 5		1	1	1	1
22c	O-ring 4 x 1		1	1	1	1

Thrust bearing

Pos.	Description	0.75 - 5.5 kW	7.5 kW
	Kit No	*96558247*	*96558249*
3	Thrust bearing, rotating	1	1
6	Thrust bearing, stationary	1	1
7	Clamping ring	1	1
10	Bearing retainer	1	1
11	Adjusting screw	1	1
13	Cover	1	1
15	Nut for rubber diaphragm	1	1
16	Lock washer	1	1
18	Nut, M8	1	1

MS 4000

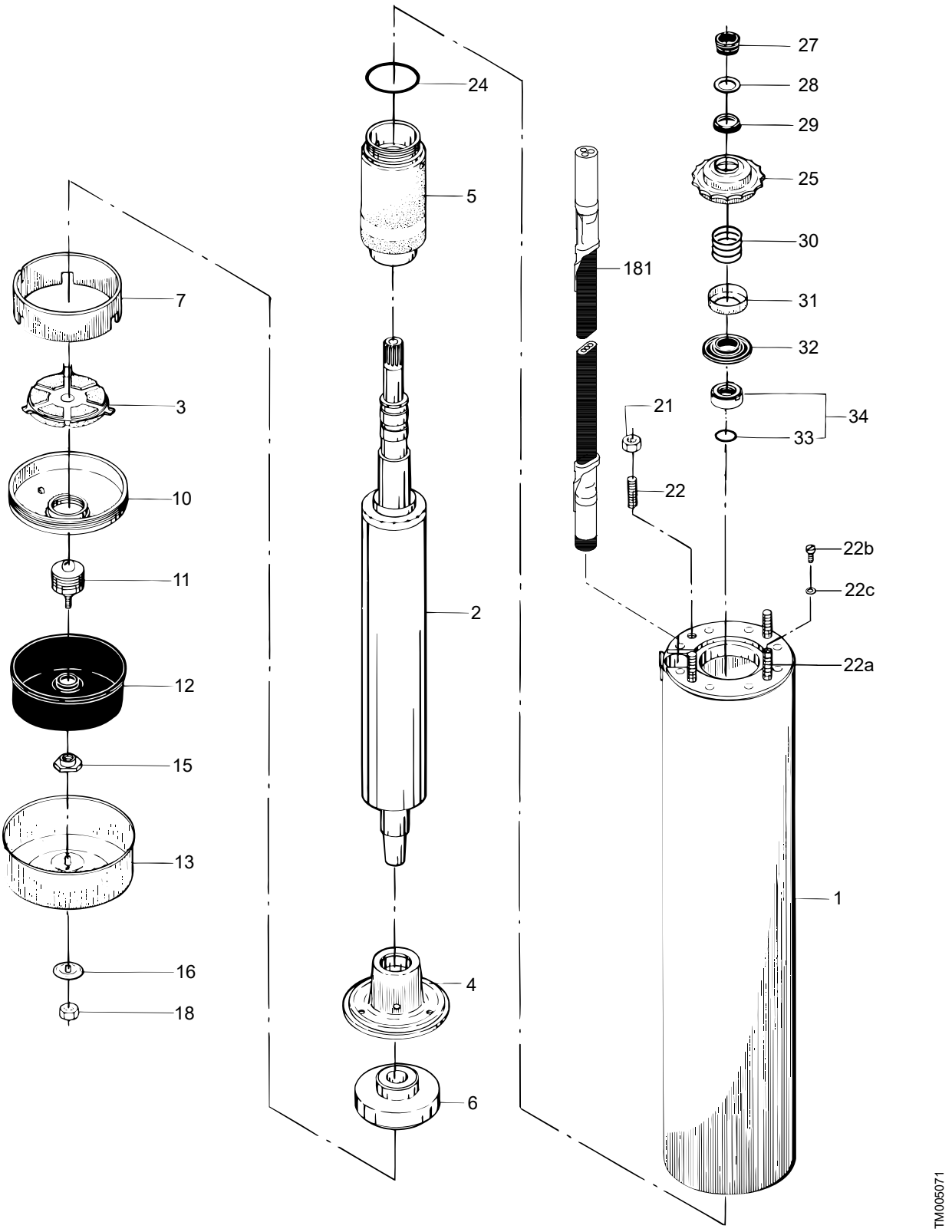
24
5
7
3
10
11
12
15
13
16
18
2
4
6
181
21
22
27
28
29
25
30
31
32
34
33
22b
22c
22a
1
TM005071

MS 6000

50/60 Hz, Model B (5.5-30 kW)

End cover

Pos.	Description		Standard version	R version
	Kit No		***96558380***	***96558381***
12	Diaphragm	NBR	1	-
		FKM	-	1
13	End cover		1	1
46	Screw with washer		4	4

Radial bearing

Pos.	Description	All
	Kit No	***96558412***
4	Radial bearing	1
5	Bearing pipe	1

Screw

Pos.	Description	Standard version	R version
	Kit No	***96558327***	***96558328***
22	Screw ½" UNF x 32	4	4

Seal kit

Pos.	Description		Carbon/ ceramic	SiC/SiC
	Kit No		***96558414***	***96558416***
1a	Valve		1	-
	Plug		1	1
2a	Stop ring		1	1
12	Diaphragm	FKM	1	1
22a	Screw with washer	M5 x 20	1	1
25a	Screw	M6 x 15	4	4
27	Sand shield	FKM	1	1
32	Shaft seal		1	1
34	Seal ring		1	1
46	Screw with washer	M5 x 25	4	4

Thrust bearing

Pos.	Description	5.5 - 7.5 kW	9.2 - 30 kW
	Kit No	***96558389***	***96558410***
3	Thrust bearing, rotating	1	1
6	Thrust bearing, stationary	1	1
7	Clamping flange	2	2
41	Screw	4	4
42	Stop for bearing	2	2
45	Shaft adjusting unit	1	1
48	Screw	4	4
49	Spring	1	1

MS 6000

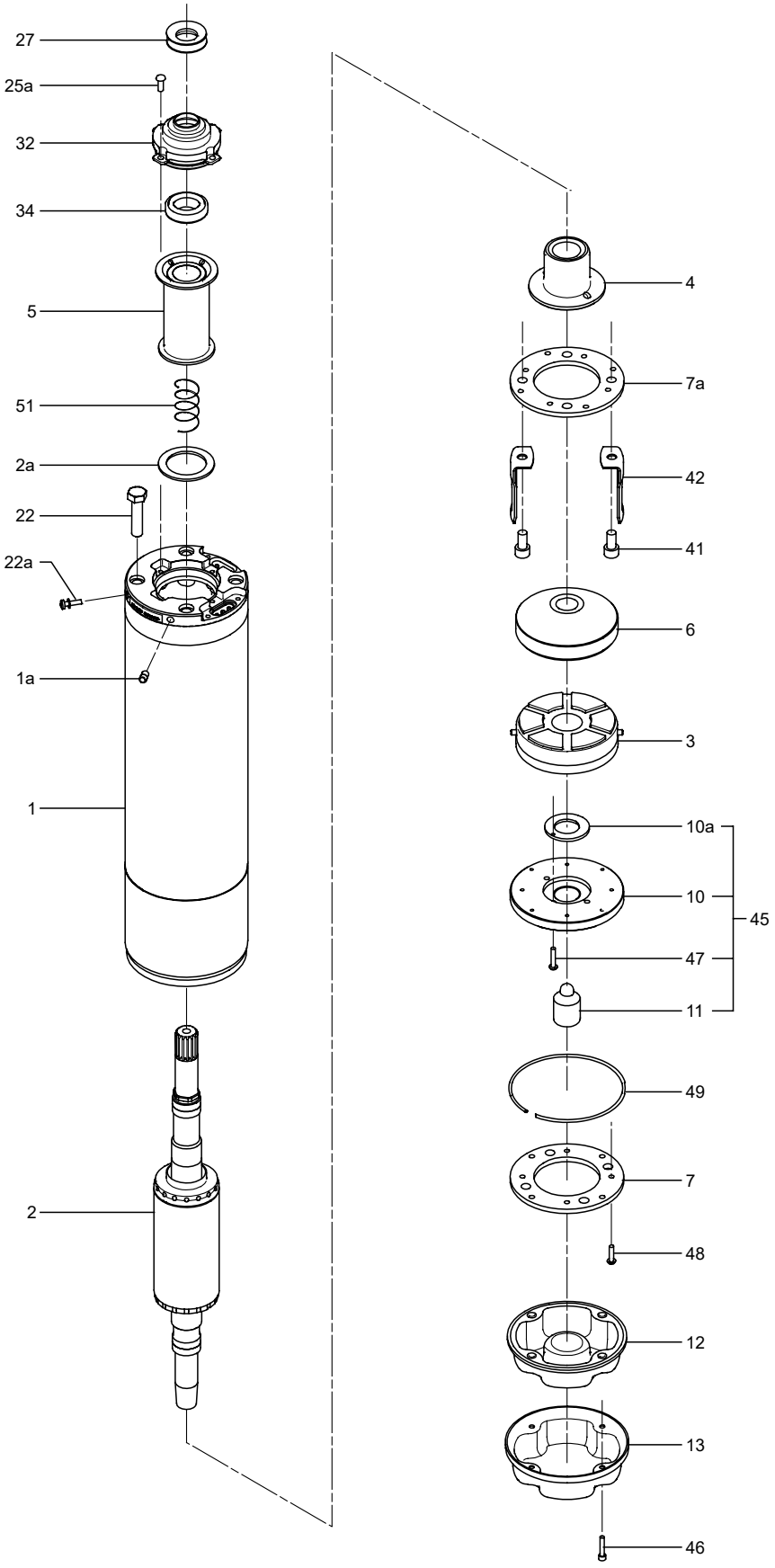
27
25a
32
34
5
51
2a
22
22a
1a
1
2
4
7a
42
41
6
3
10a
10
45
47
11
49
7
48
12
13
46
TM026425

49. MTA, MTAD

MTA 30, 60, 90, 120, 200, 20H, 40H, 70H, 100H

Bottom suction

Pos.	Description	MTA 30	MTA 60	MTA 90	MTA 120	MTA 120	MTA 200	MTA 70H
	Kit No	*98073609*	*98073623*	*98073627*	*98073629*	**98561950**	*98073630*	**98561963**
49	Impeller, bronze	-	-	-	1	-	1	-
49	Impeller, composite	1	1	1	-	1	-	1
62	Washer	2	2	2	2	2	2	2
188a	Washer	1	1	1	1	1	1	1
188b	Nut	1	1	1	1	1	1	1

Terminal box

Description	**MTA 30,60,90,20H,40H,70H**	**MTA 120,200,100H**	**MTA 30,60,90,20H,40H,70H**	**MTA 120,200,100H**
Voltage	**230 / 400 V**	**230 / 400 V**	**200 V**	**200 V**
Kit No	*98561965*	*98561968*	**98591908**	**98591909**
Terminal box	1	1	1	1

Top suction

Pos.	Description	MTA 30	MTA 60	MTA 90	MTA 120	MTA120	MTA 20H	MTA 40H	MTA 70H	MTA 100H
	Kit No	*98073603*	*98073621*	*98073625*	*98073628*	*98561949*	*98073641*	*98073642*	*98073643*	*98073644*
49	Impeller, bronze	-	-	-	1	-	1	1	1	1
49	Impeller, composite	1	1	1	-	1	-	-	-	-
62	Washer	2	2	2	2	2	2	2	2	2
70	Vortex preventer	-	-	2	2	2	-	-	-	-
188	Bolt	1	1	1	1	1	1	1	1	1
188a	Washer	1	1	1	1	1	1	1	1	1

30, 60, 90, 120, 20H, 40H, 70H, 100H top suction

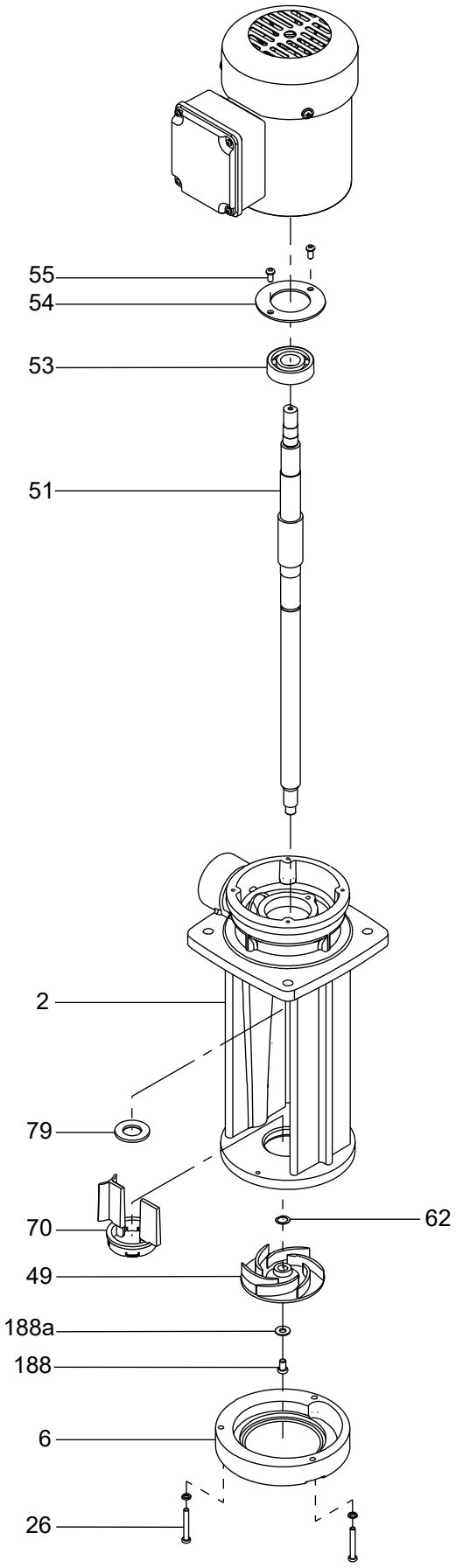

30, 60, 90, 120, 200 bottom suction

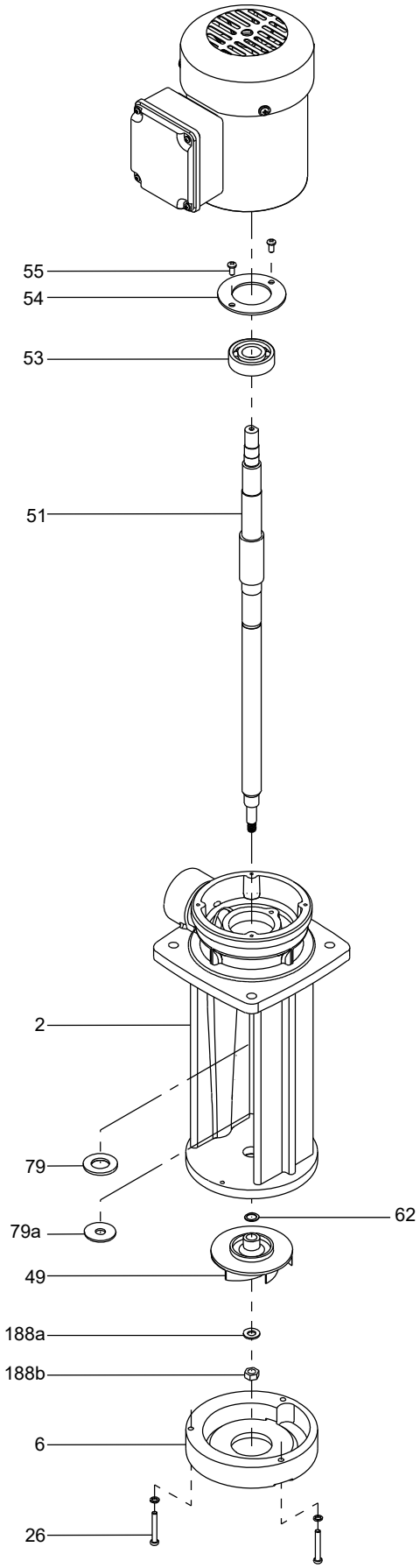

50. MTB

50/60 Hz

Impeller

Pos.	Description/kit No	MTB 50-200/215	MTB 65-160/158	MTB 65-160/171	MTB 65-200/183	MTB 65-200/199
		50 Hz	50 Hz	50 Hz	50 Hz	50 Hz
		96620204	*96620179*	*96620201*	*96620202*	*96620203*
49	Impeller	1	1	1	1	1

Motor stool complete

Pos.	Description/kit No	3 kW	5.5 kW, 7.5 kW	11 kW, 15 kW
		96620177	*96620176*	*96620178*
2	Motor stool	1	1	1
7	Coupling guard	2	2	2
7a	Screw	4	4	4
17	Plug, vent	1	1	1
28a	Set screw	4	4	4
36a	Nut	4	4	4

Pump housing complete

Pos.	Description/kit No	3 kW	5.5 kW, 7.5 kW	11 kW, 15 kW
		96620471	*96620472*	*96620473*
6	Pump housing	1	1	1
20	Plug	2	2	2
26	Staybolt	8	6	8
36	Nut	8	6	8

Pump shaft

Pos.	Description/kit No	3 kW	5.5 kW, 7.5 kW	11 kW, 15 kW
		96581495	*96581497*	*96581499*
9	Hexagon socket set screw	2	2	2
11	Parallel key	1	1	1
51	Stub shaft	1	1	1
66	Washer	1	1	1
66a	Spring lock washer	1	1	1
67	Nut	1	1	1
103	Bush	1	-	-
103	Spacing bush	-	1	1
103	Spacing bush	-	-	1 [1)]
	Spacer 30.5/36 x 10	-	1 [2)]	-

1) Used for MTB 65-200/199, 15 kW

2) Used for MTB 50-200/218, 5.5 kW

Shaft seal

Pos	Description/kit No	*96581510*
72a	O-ring 177.39 x 3.53, FKM	1
72a	O-ring 221.84 x 3.53, FKM	1
105	Shaft seal	1

MTB 50-200/215, 65-160/158, 65-160/171

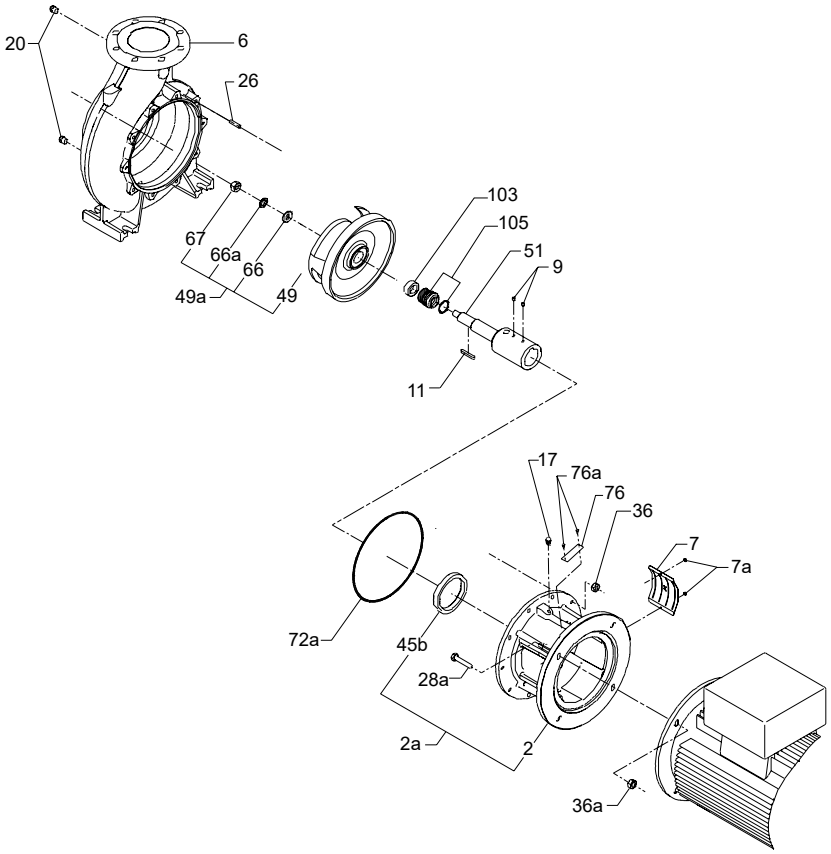

TM034772

MTB 65-200/183, 65-200/199

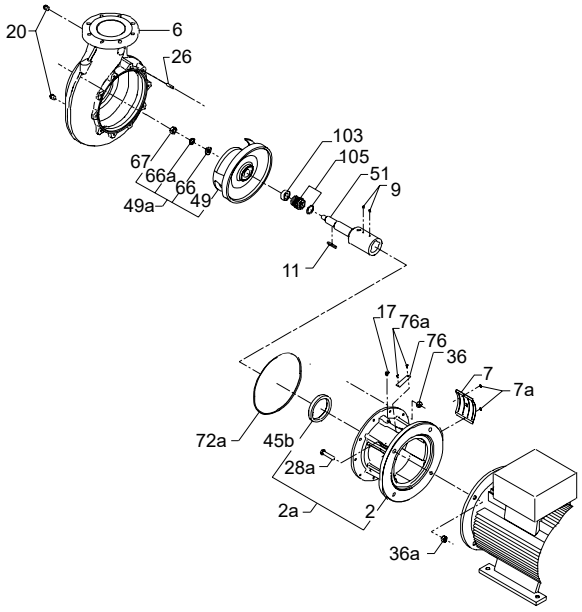

TM034771

51. MTH/MTC

MTH/MTC 2, 4

50/60 Hz

Metal terminal box

Pos.	Models	All
	Kit No	***405179***
	Description	
164a	Terminal box with gasket	1
164	Terminal box cover with gasket	1
166	Screw	4
175	Screw	4
176	Terminal complete	1

Shaft seal

Pos.		MTH/C 2, 4	
	Kit No	***435045***	***98455535***
	Description	**AUUV**	**AQQV**
37	Gasket	1	1
79	Thrower	1	1
79a	Lip seal	1	1
105	Shaft seal	1	1

Wear parts

Pos.		MTH/C 2-30 MTH/C 2-40	MTH/C 2-50 MTH/C 2-60 MTH/C 2-90 MTH/C 2-100 MTH/C 2-110	MTH/C 4-20 MTH/C 4-30	MTH/C 4-40 MTH/C 4-50 MTH/C 4-60 MTH/C 4-80
	Kit No	***435032***	***435033***	***445057***	***445058***
	Description				
4a	Bearing chamber	-	1	-	1
36	Nut	3	3	3	3
37	Gasket	1	1	1	1
45	Neck ring	4	5	-	-
47a	Bearing ring	-	1	-	1
62	Stop ring	1	1	1	1
64a	Spacing pipe 7.8 mm	1	1	-	-
65	Neck ring retainer	4	5	-	-
66	Spring washer	1	1	1	1
66a	Washer	3	3	3	3
67	Lock nut	1	1	1	1
122	Priming screw	1	1	-	-

MTH/MTC 2, 4

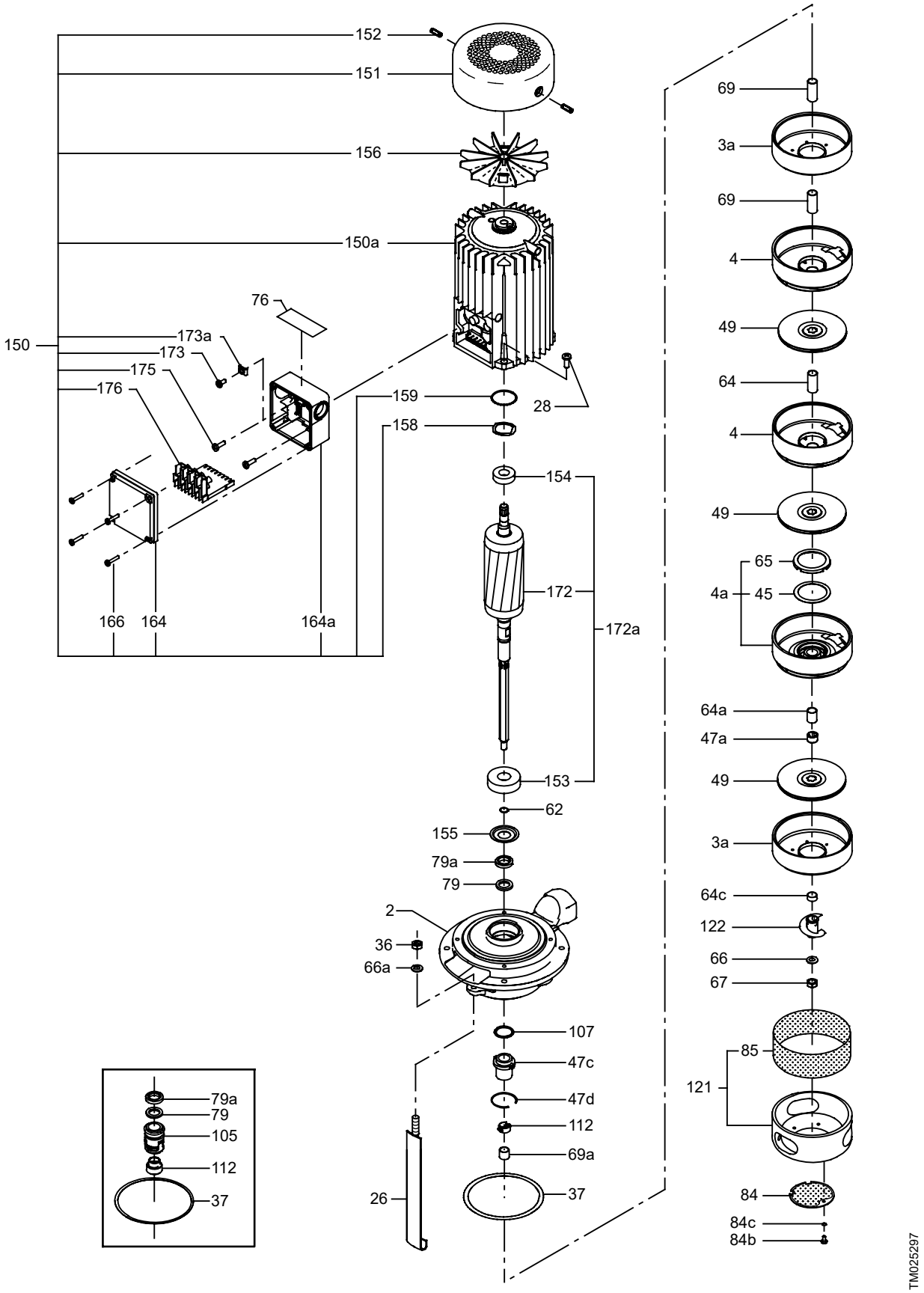

Shaft seal

MTH, MTC 8, 12, 16

Metal terminal box

Pos.	Models	MG 71/80
	Kit No	***405179***
	Description	
164a	Terminal box with gasket	1
164	Terminal box cover with gasket	1
166	Screw	4
175	Screw	4
176	Terminal complete	1

Shaft seal

Pos.		MTH/MTC 8, 12, 16
	Kit No	***96431994***
	Description	**AUUV**
37	O-ring, for pumps manufactured after 0643 (yyww)	1
105	Shaft seal complete	1

Wear parts

Pos.			MTH/MTC 8/12	MTH/MTC 16
	Kit No		***96435991***	***96435992***
	Description			
4a	Bearing chamber		1	1
37	Gasket 145/138 x 0.25		1	1
45	Neck ring		7	4
45b	Neck ring		-	1
49c	Impeller wear ring		-	4
64	Spacing pipe	29 mm	6	-
		28.5 mm	4	3
64a		30 mm	6	5
64b		15 mm	-	4
64c		10.5 mm	-	1
64d		10 mm	-	1
65	Neck ring retainer		7	4
65a	Neck ring retainer		-	1
66	Spring washer		1	1
67	Lock nut, M8		1	1
69	Spacing pipe	5.8 mm	-	1

MTH, MTC 8, 12, 16

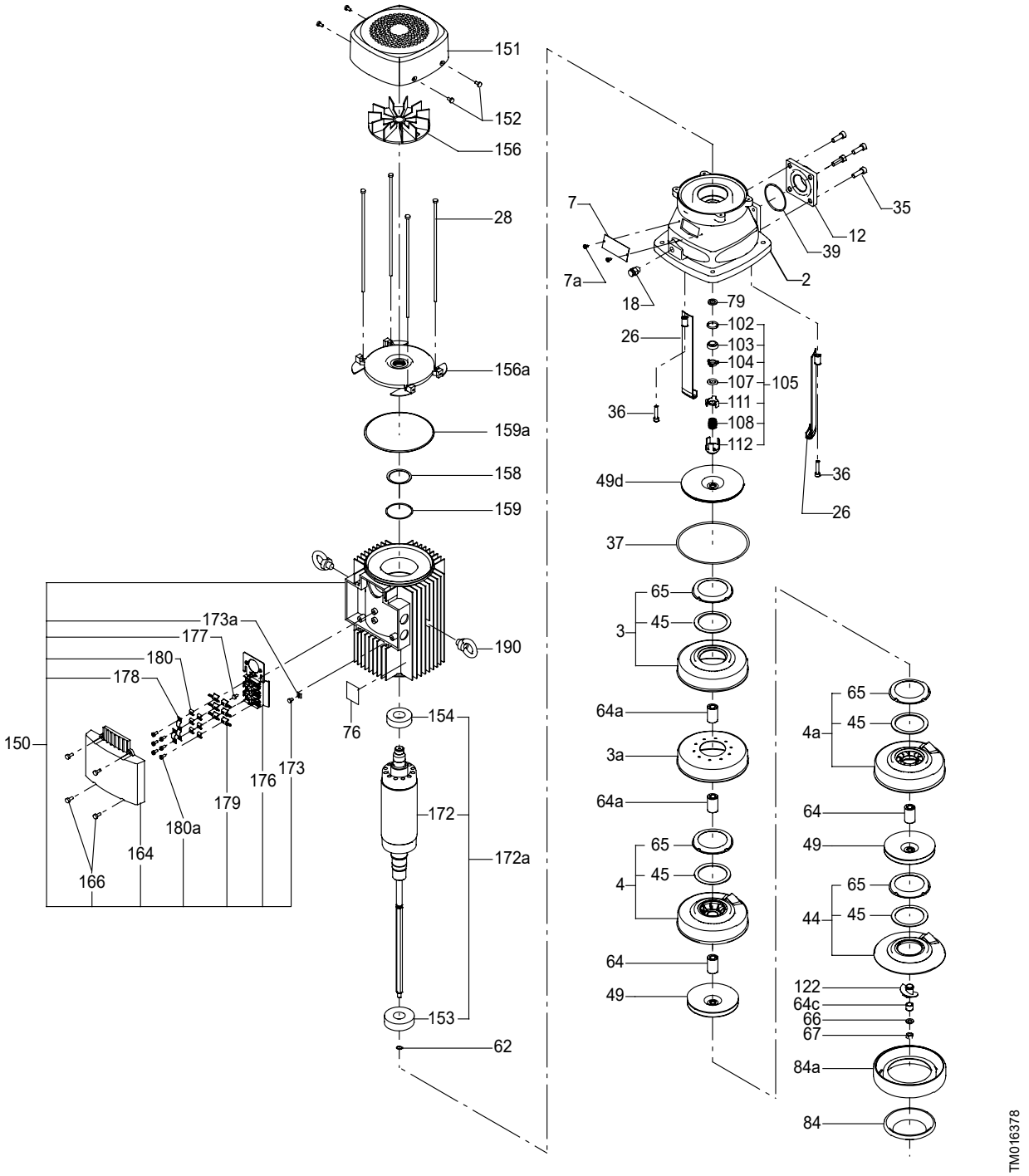

52. MTR

MTR 1s, 1, 2, 3, 4, 5 and 8 (50/60 Hz)

Shaft seal

Pos.	Kit No	96455084	96455085	96455086	96455087	96533324	96533326
	Description	**HUUE**	**HUUV**	**HQQE**	**HQQV**	**HUUK**	**HQQK**
105	Shaft seal	1	1	1	1	1	1
-	Adjusting fork	1	1	1	1	1	1

Wear parts, MTR 1s, 1, 2, 3

Pos.	Kit No							
		No O-ring	96530909	-	-	-	-	-
		EPDM	-	98311342	98311345	98311346	98311347	98311348
		FKM	-	98311373	98311381	98311382	98311383	98311384
	Number of chambers		**2-9**	**10-19**	**20-27**	**29-36**	**37-42**	**43-49**
4a	Chamber with bearing		1	2	3	4	4	4
37	Gasket		1	1	1	1	1	1
	O-ring		-	1	1	1	1	1
45	Neck ring		8	17	24	32	38	45
47a	Bearing ring, rotating		1	2	3	4	4	-
69a	Spacing pipe 30.3 mm		1	1	1	1	1	1
64a	Spacing pipe 4 mm		1	2	3	4	4	4
69	Spacing pipe 18 mm		7	16	23	31	37	44
64	Spacing pipe 17 mm		7	16	23	31	37	44
64c	Spacing pipe 9 mm		1	1	1	1	1	1
65	Neck ring retainer		8	17	24	32	38	45
66	Lock washer set		1	1	1	1	1	1
67	Lock nut		1	1	1	1	1	1
122	Simplified priming screw		1	1	1	1	1	1
64c	Lower spacer 10.5 mm		1	1	1	1	1	1

Wear parts, MTR 4

Pos.	Kit No				
		No O-ring	99923454	-	-
		EPDM	-	99923455	99923457
		FKM	-	99923456	99923458
	Number of chambers		**4-7**	**8-16**	**17-22**
4a	Chamber with bearing		2	3	4
37	Gasket		1	1	1
	O-ring		-	1	1
45	Neck ring		5	13	18
47a	Bearing ring, rotating		2	3	4
64	Spacing pipe 20 mm		2	2	2
64a	Spacing pipe 4 mm		2	2	2
69	Spacing pipe 27 mm		4	12	18
64	Spacing pipe 26 mm		4	12	18
64c	Spacing pipe 15 mm		2	2	4
65	Neck ring retainer		5	13	18
66	Lock washer set		1	1	1
67	Lock nut		1	1	1
122	Simplified priming screw		1	1	1
64c	Lower spacer 10.5 mm		1	1	1

Wear parts, MTR 5

Pos.	Kit No					
		No O-ring	96531003	-	-	-
		EPDM	-	98311349	98311350	98311371
		FKM	-	98311385	98311386	98311388
	Number of chambers		**2-7**	**8-16**	**17-22**	**24-33**
4a	Chamber with bearing		2	3	4	6
37	Gasket		1	1	1	1
	O-ring		-	1	1	1
45	Neck ring		5	13	18	27
47a	Bearing ring, rotating		2	3	3	4
69a	Spacing pipe 31.35 mm		1	1	1	1
64a	Spacing pipe 4.15 mm		1	1	1	1
69	Spacing pipe 27 mm		4	12	18	28
64	Spacing pipe 26 mm		4	12	18	28
64c	Spacing pipe 13 mm		2	3	3	4
65	Neck ring retainer		5	13	18	27
66	Lock washer set		1	1	1	1
67	Lock nut		1	1	1	1
122	Simplified priming screw		1	1	1	1
64c	Lower spacer 10.5 mm		1	1	1	1

Wear parts, MTR 8

Pos.	Kit No					
		No O-ring	98788385			
		EPDM	-	98788386	98788387	98788388
		FKM	-	98807648	98807649	98807650
	Number of chambers		**1-7**	**8-16**	**17-22**	**24-31**
4a	Chamber with bearing		2	3	4	6
37	Gasket		1	1	1	1
	O-ring		-	1	1	1
45	Neck ring		5	13	18	27
47a	Bearing ring, rotating		2	3	3	4
69a	Spacing pipe 42 mm		1	1	1	1
64a	Spacing pipe 4.15 mm		1	1	1	1
69	Spacing pipe 27 mm		4	12	18	28
64	Spacing pipe 26 mm		4	12	18	28
64c	Spacing pipe 13 mm		2	3	3	4
65	Neck ring retainer		5	13	18	27
66	Lock washer set		1	1	1	1
67	Lock nut		1	1	1	1
122	Simplified priming screw		1	1	1	1
64c	Lower spacer 10.5 mm		1	1	1	1

Coupling

Pos.	Kit No	415078	415079	415062	415063	415314	415315	97689360	97899381
	Motor/pump shaft diameter x L [mm]	**14/12 x 81**	**19/12 x 81**	**24/12 x 68**	**28/12 x 68**	**15.8/12 x 61**	**28.6/12 x 68**	**38/12 x 90**	**34,9/12 x 90**
9	Screw	4	4	4	4	4	4	4	4
10	Pin	1	1	1	1	1	1	1	1
10a	Coupling half	2	2	2	2	2	2	2	2

Coupling guard

Pos.	Kit No	96531008	97689844
	Description		5.5 to 7.5 kW
7	Coupling guard	2	2
7a	Screw	4	4

Metal terminal box, MG 71/80

Pos.	Kit No	405179
	Description	
164a	Terminal box with gasket	1
164	Terminal box cover with gasket	1
166	Screw	4
175	Screw	4
176	Terminal complete	1

MTR 1s, 1, 2, 3, 4, 5, 8

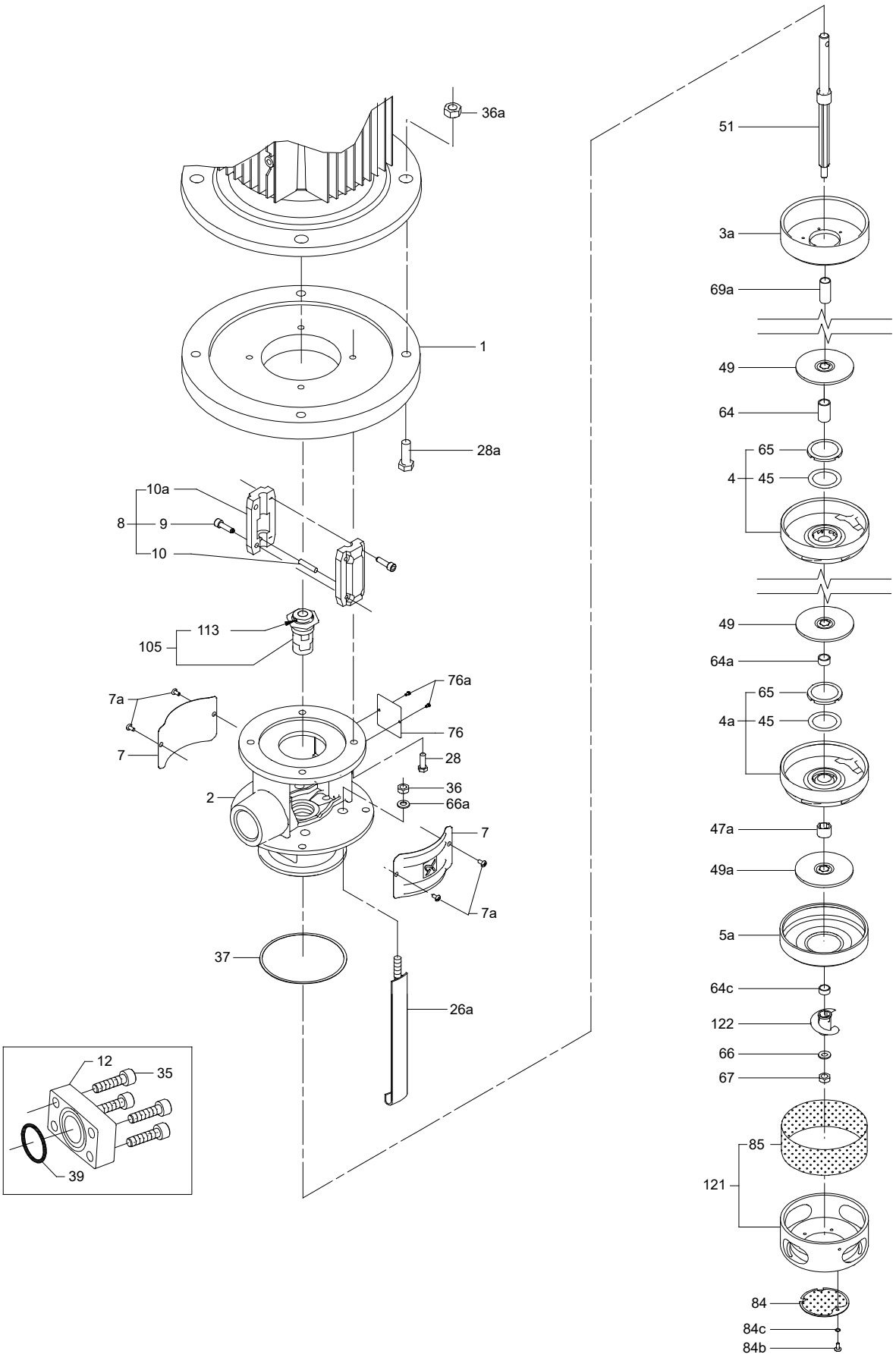

MTR 1s, 1, 2, 3, 4, 5 and 8 with drainage back to tank (50/60 Hz)

Shaft seal

Pos.	Kit No	98584426	98928902
	Description	**AQQV**	**AQQE**
105	Shaft seal	1	1
183	Lip seal	1	1
37	Gasket	1	1
37	D-ring	1	1
-	Adjusting fork	1	1

Wear parts, MTR 1s, 1, 2, 3 with drainage back to tank

Pos.	Kit No							
		No O-ring	96530909	-	-	-	-	-
		EPDM	-	98311342	98311345	98311346	98311347	98311348
		FKM	-	98311373	98311381	98311382	98311383	98311384
	Number of chambers		**2-9**	**10-19**	**20-27**	**29-36**	**37-42**	**43-49**
4a	Chamber with bearing		1	2	3	4	4	4
37	Gasket		1	1	1	1	1	1
	O-ring		-	1	1	1	1	1
45	Neck ring		8	17	24	32	38	45
47a	Bearing ring, rotating		1	2	3	4	4	-
69a	Spacing pipe 30.3 mm		1	1	1	1	1	1
64a	Spacing pipe 4.15 mm		1	2	3	4	4	4
69	Spacing pipe 18 mm		7	16	23	31	37	44
64	Spacing pipe 17 mm		7	16	23	31	37	44
64c	Spacing pipe 9 mm		1	1	1	1	1	1
65	Neck ring retainer		8	17	24	32	38	45
66	Lock washer set		1	1	1	1	1	1
67	Lock nut		1	1	1	1	1	1
122	Simplified priming screw		1	1	1	1	1	1
64c	Lower spacer 10.5 mm		1	1	1	1	1	1

Wear parts, MTR 4

Pos.	Kit No				
		No O-ring	99923454	-	-
		EPDM	-	99923455	99923457
		FKM	-	99923456	99923458
	Number of chambers		**4-7**	**8-16**	**17-22**
4a	Chamber with bearing		2	3	4
37	Gasket		1	1	1
	O-ring		-	1	1
45	Neck ring		5	13	18
47a	Bearing ring, rotating		2	3	4
64	Spacing pipe 20 mm		2	2	2
64a	Spacing pipe 4 mm		2	2	2
69	Spacing pipe 27 mm		4	12	18
64	Spacing pipe 26 mm		4	12	18
64c	Spacing pipe 15 mm		2	2	4
65	Neck ring retainer		5	13	18
66	Lock washer set		1	1	1
67	Lock nut		1	1	1
122	Simplified priming screw		1	1	1
64c	Lower spacer 10.5 mm		1	1	1

Wear parts, MTR 5 with drainage back to tank

Pos.	Kit No					
		No O-ring	96531003	-	-	-
		EPDM	-	98311349	98311350	98311371
		FKM	-	98311385	98311386	98311388
	Number of chambers		2-7	8-16	17-22	24-33
4a	Chamber with bearing		2	3	4	6
37	Gasket		1	1	1	1
	O-ring		-	1	1	1
45	Neck ring		5	13	18	27
47a	Bearing ring, rotating		2	3	3	4
69a	Spacing pipe 31.35 mm		1	1	1	1
64a	Spacing pipe 4.15 mm		1	1	1	1
69	Spacing pipe 27 mm		4	12	18	28
64	Spacing pipe 26 mm		4	12	18	28
64c	Spacing pipe 13 mm		2	3	3	4
65	Neck ring retainer		5	13	18	26
66	Lock washer set		1	1	1	1
67	Lock nut		1	1	1	1
122	Simplified priming screw		1	1	1	1
64c	Lower spacer 10.5 mm		1	1	1	1

Wear parts, MTR 8 with drainage back to tank

Pos.	Kit No					
		No O-ring	98788385			
		EPDM	-	98788386	98788387	98788388
		FKM	-	98807648	98807649	98807650
	Number of chambers		1-7	8-16	17-22	24-31
4a	Chamber with bearing		2	3	4	6
37	Gasket		1	1	1	1
	O-ring		-	1	1	1
45	Neck ring		5	13	18	27
47a	Bearing ring, rotating		2	3	3	4
69a	Spacing pipe 42 mm		1	1	1	1
64a	Spacing pipe 4.15 mm		1	1	1	1
69	Spacing pipe 27 mm		4	12	18	28
64	Spacing pipe 26 mm		4	12	18	28
64c	Spacing pipe 13 mm		2	3	3	4
65	Neck ring retainer		5	13	18	27
66	Lock washer set		1	1	1	1
67	Lock nut		1	1	1	1
122	Simplified priming screw		1	1	1	1
64c	Lower spacer 10.5 mm		1	1	1	1

Coupling

Pos.	Kit No	415078	415079	415062	415063	415314	415315	97689360	97899381
	Motor/pump shaft diameter x L [mm]	14/12 x 81	19/12 x 81	24/12 x 68	28/12 x 68	15.8/12 x 61	28.6/12 x 68	38/12 x 90	34,9/12 x 90
9	Screw	4	4	4	4	4	4	4	4
10	Pin	1	1	1	1	1	1	1	1
10a	Coupling half	2	2	2	2	2	2	2	2

Coupling guard

Pos.	Kit No	96531008	97689844
	Description		5.5 to 7.5 kW
7	Coupling guard	2	2
7a	Screw	4	4

Metal terminal box, MG 71/80

Pos.	Kit No	405179
	Description	
164a	Terminal box with gasket	1
164	Terminal box cover with gasket	1
166	Screw	4
175	Screw	4
176	Terminal complete	1

MTR 1s, 1, 2, 3, 4, 5, 8 with drainage back to tank

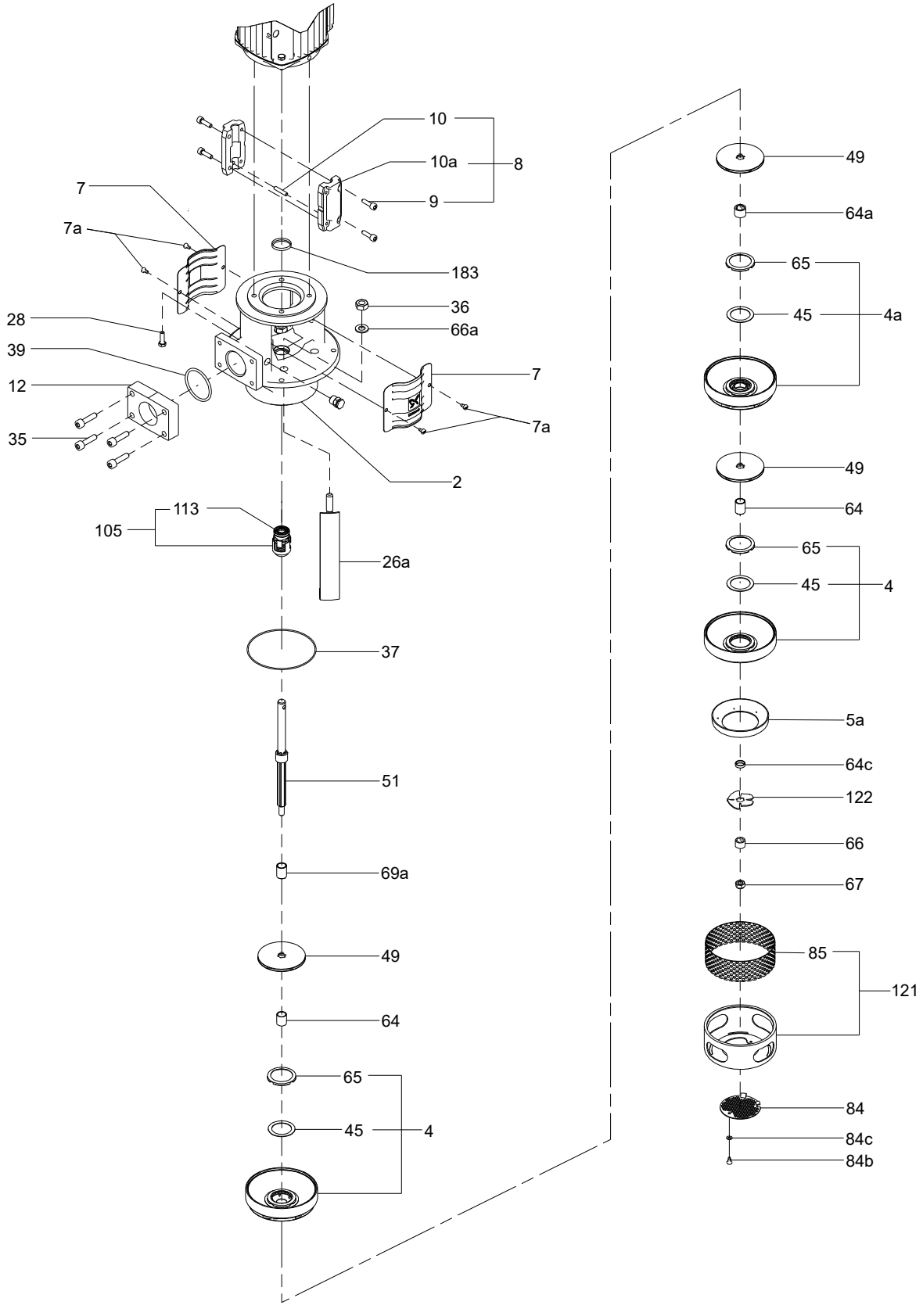

MTR 10, 15 and 20

Shaft seal

Pos.	Kit No	96511840	96511841	96511844	96511845	96511842	96511846
	Description	HUUE	HUUV	HQQE	HQQV	HUUK	HQQK
105	Shaft seal	1	1	1	1	1	1
-	Adjusting fork	1	1	1	1	1	1

Wear parts, MTR 10

Pos.	Kit No	96531041	96531042	96531043	97689849	97689850
	Number of chambers	2-9	10-16	18-22	23-27	28-31
4a	Chamber with bearing	2	3	3	4	4
37	Gasket	1	1	1	1	1
45	Neck ring	7	13	19	23	27
47a	Bearing ring, rotating	2	3	3	4	4
64a	Spacing pipe 6 mm	2	3	3	4	6
64e	Spacing pipe 7 mm	1	2	2	3	3
64	Spacing pipe 9 mm	2	3	3	4	4
64b	Spacing pipe 11 mm	1	1	1	1	1
69a	Spacing pipe 18 mm	1	1	1	1	1
69	Spacing pipe 29 mm	6	12	18	22	26
64d	Spacing pipe 30 mm	6	12	18	22	26
65	Neck ring retainer	7	13	19	23	27
66	Lock washer set	1	1	1	1	1
122	Priming screw	1	1	1	1	1
64c	Lower spacer	1	1	1	1	1

Wear parts, MTR 15, 20

Pos.	Kit No	96531044	96531045	97689487
	Number of chambers	2-9	10-17	18-21
4a	Chamber with bearing	2	3	3
37	Gasket	1	1	1
45	Neck ring	7	14	18
47a	Bearing ring, rotating	2	3	3
64e	Spacing pipe 7 mm	2	2	2
64b	Spacing pipe 11 mm	1	1	1
64a	Spacing pipe 12.6 mm	2	3	3
64	Spacing pipe 17 mm	2	3	3

Pos.	Kit No	96531044	96531045	97689487
	Number of chambers	2-9	10-17	18-21
69a	Spacing pipe 25.6 mm	1	1	1
69	Spacing pipe 43.6 mm	6	13	17
64d	Spacing pipe 45 mm	6	13	17
65	Neck ring retainer	7	14	18
66	Lock washer set	1	1	1
122	Priming screw	1	1	1
64c	Lower spacer	1	1	1

Coupling

Pos.	Kit No	339169	339124	339128	339138	339142	425260	425261	425262	425263
	Motor/pump shaft diameter x L [mm]	19/16 x 82	24/16 x 68	28/16 x 68	38/16 x 90	42/16 x 105	15.9/16 x 63	28.6/16 x 90	34.9/16 x 90	41.3/16 x 105
9	Screw	4	4	4	4	4	4	4	4	4
10	Pin	1	1	1	1	1	1	1	1	1
10a	Coupling half	2	2	2	2	2	2	2	2	2

Coupling guard

Pos.	Kit No	96531046	96531047	96531048
	Description	84.5 x 131.8 mm	84.5 x 104 mm	131.8 x 125 mm
7	Coupling guard	2	2	2
7a	Screw	4	4	4

Metal terminal box, MG 71/80

Pos.	Kit No	405179
	Description	
164a	Terminal box with gasket	1
164	Terminal box cover with gasket	1
166	Screw	4
175	Screw	4

Pos.	Kit No	405179
	Description	
176	Terminal complete	1

MTR 10, 15, 20

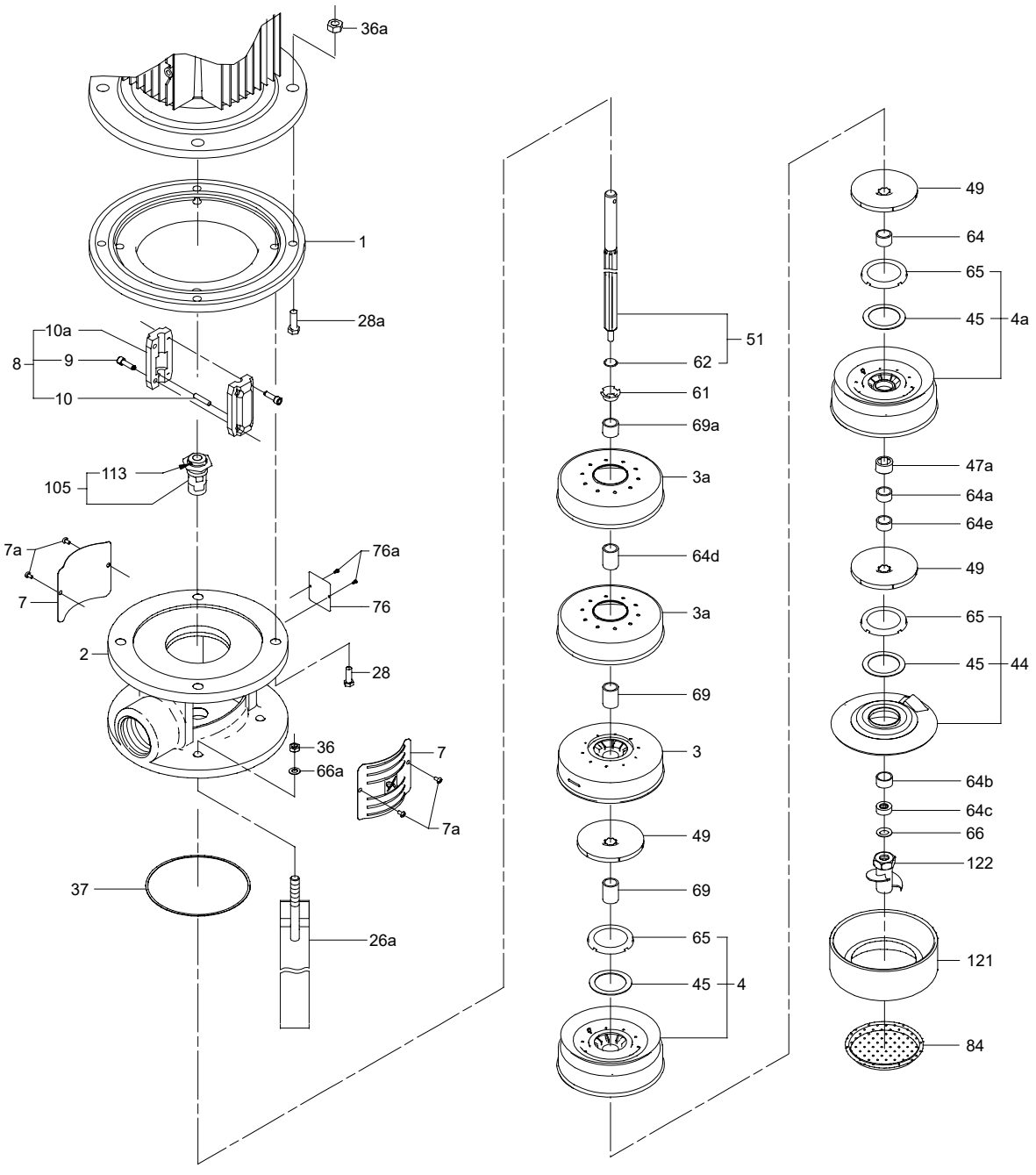
36a
1
28a
10a
8
9
10
105
113
7a
7
76a
76
2
28
36
66a
7
7a
37
26a
51
62
61
69a
3a
64d
3a
69
3
49
69
65
45
4
49
64
65
45
4a
47a
64a
64e
49
65
45
44
64b
64c
66
122
121
84
TM028026

MTR 10, 15 and 20 with drainage back to tank

Shaft seal

Pos.	Kit No	98873610	98979871
	Description	AQQV	AQQE
105	Shaft seal	1	1
183	Lip seal	1	1
37	Gasket	1	1
-	Adjusting fork	1	1

Wear parts, MTR 10

Pos.	Kit No	96531041	96531042	96531043	97689849	97689850
	Number of chambers	2-9	10-16	18-22	23-27	28-31
4a	Chamber with bearing	2	3	3	4	4
37	Gasket	1	1	1	1	1
45	Neck ring	7	13	19	23	27
47a	Bearing ring, rotating	2	3	3	4	4
64a	Spacing pipe 6 mm	2	3	3	4	6
64e	Spacing pipe 7 mm	1	2	2	3	3
64	Spacing pipe 9 mm	2	3	3	4	4
64b	Spacing pipe 11 mm	1	1	1	1	1
69a	Spacing pipe 18 mm	1	1	1	1	1
69	Spacing pipe 29 mm	6	12	18	22	26
64d	Spacing pipe 30 mm	6	12	18	22	26
65	Neck ring retainer	7	13	19	23	27
66	Lock washer	1	1	1	1	1
122	Priming screw	1	1	1	1	1
64c	Lower spacer	1	1	1	1	1

Wear parts, MTR 15, 20

Pos.	Kit No	96531044	96531045	97689487
	Number of chambers	2-9	10-17	18-21
4a	Chamber with bearing	2	3	3
37	Gasket	1	1	1
45	Neck ring	7	14	18
47a	Bearing ring, rotating	2	3	3
64e	Spacing pipe 7 mm	2	2	2
64b	Spacing pipe 11 mm	1	1	1
64a	Spacing pipe 12.6 mm	2	3	3
64	Spacing pipe 17 mm	2	3	3
69a	Spacing pipe 25.6 mm	1	1	1
69	Spacing pipe 43.6 mm	6	13	17
64d	Spacing pipe 45 mm	6	13	17
65	Neck ring retainer	7	14	18
66	Lock washer	1	1	1
122	Priming screw	1	1	1
64c	Lower spacer	1	1	1

Coupling

Pos.	Kit No	339169	339124	339128	339138	339142	425260	425261	425262	425263
	Motor/pump shaft diameter x L [mm]	19/16 x 82	24/16 x 68	28/16 x 68	38/16 x 90	42/16 x 105	15.9/16 x 63	28.6/16 x 90	34.9/16 x 90	41.3/16 x 105
9	Screw	4	4	4	4	4	4	4	4	4
10	Pin	1	1	1	1	1	1	1	1	1
10a	Coupling half	2	2	2	2	2	2	2	2	2

Coupling guard

Pos.	Kit No	96531046	96531047	96531048
	Description	84.5 x 131.8 mm	84.5 x 104 mm	131.8 x 125 mm
7	Coupling guard	2	2	2
7a	Screw	4	4	4

Metal terminal box, MG 71/80

Pos.	Kit No	405179
	Description	
164a	Terminal box with gasket	1
164	Terminal box cover with gasket	1
166	Screw	4
175	Screw	4
176	Terminal complete	1

MTR 10, 15, 20 with drainage back to tank

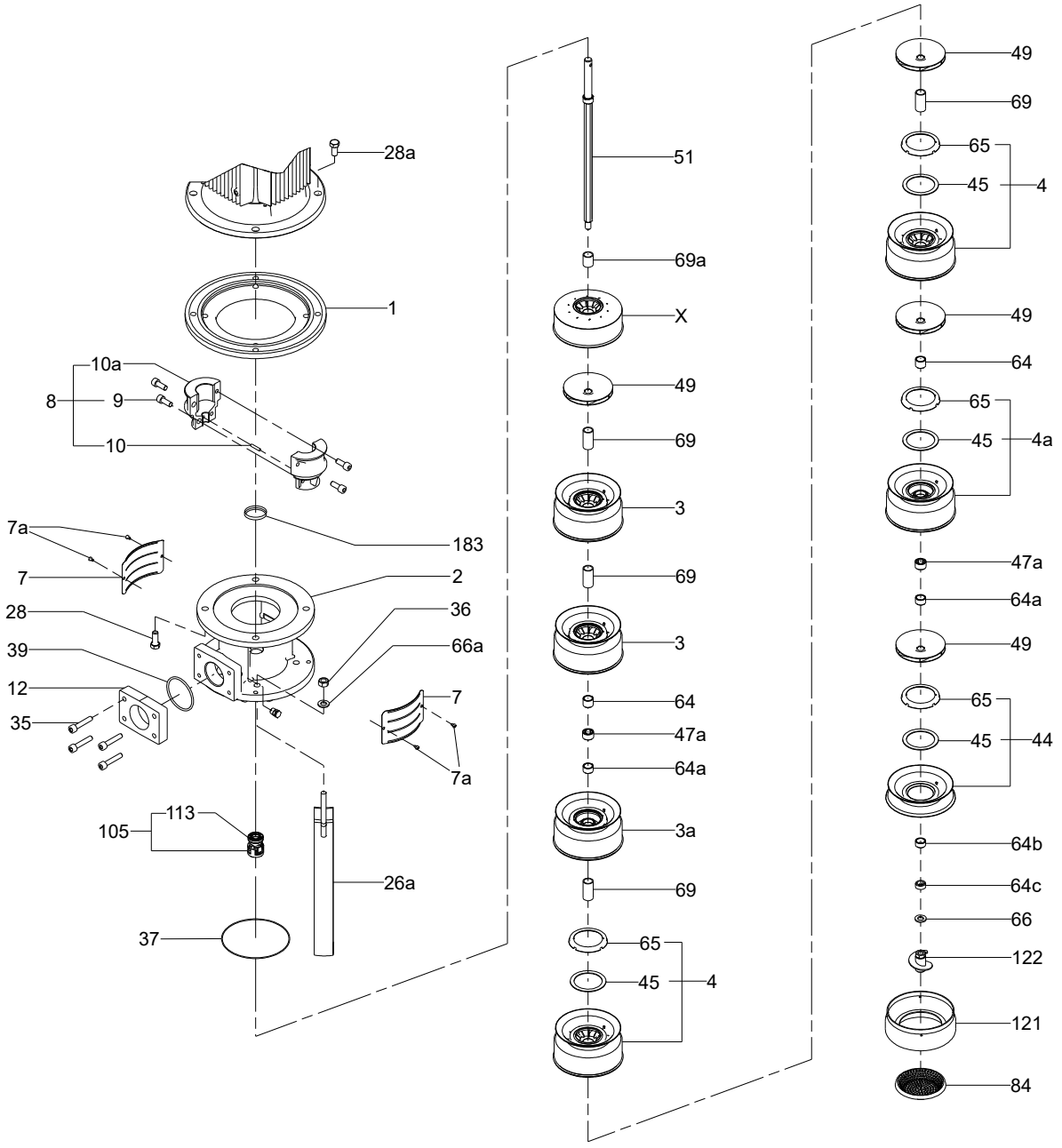

MTR 32, 45 and 64

Shaft seal

Pos.	Kit No	96441768	96525458	96525490	96436727	96533367	96533369
	Description	HUUV	HQQE	HQQV	HUUE	HUUK	HQQK
105	Shaft seal	1	1	1	1	1	1

Wear parts, MTR 32

Pos.	Kit No	96430767	96491254	96491255	96430768	96491256	96430769	97689525	97689526	97689527
	Number of chambers	1-4	5-8	9-14	5-8	9-14	9-14	15-18	15-18	15-18
	Number of impellers	1-4	1-3	1-3	5-8	4-8	9-12	1-3	4-8	9-12
37	O-ring	4	8	14	4	11	6	18	15	10
45	Neck ring	4	4	4	8	8	12	4	8	12
47	Bearing (Graflon)	1	1	1	2	2	3	1	2	3
47	Bearing (SiC)	1	1	1	2	2	3	1	2	3
47c	Bush	3	3	3	6	6	9	3	6	9
47d	Lock ring	4	4	4	8	8	12	4	8	12
49c	Wear ring	4	4	4	8	8	12	4	8	12
65	Neck ring retainer	4	4	4	8	8	12	4	8	12

Wear parts, MTR 45

Pos.	Kit No	96430773	96491257	96491370	96430775	96491371	97689529	97689530
	Number of chambers	1-4	5-8	9-12	5-8	9-12	13-17	13-17
	Number of impellers	1-4	1-3	1-3	4-8	4-8	1-3	4-8
37	O-ring 160 x 2	4	8	12	5	9	17	14
45	Neck ring	4	4	4	8	8	4	8
47	Bearing (Graflon)	1	1	1	2	2	1	2
47	Bearing (SiC)	1	1	1	2	2	1	2
47c	Bush	3	3	3	6	6	3	6
47d	Lock ring	4	4	4	8	8	4	8
49c	Wear ring	4	4	4	8	8	4	8
65	Neck ring retainer	4	4	4	8	8	4	8

Wear parts, MTR 64

Pos.	Kit No	96430819	96491372	96491373	96430820	96491374	97689976	97689977
	Number of chambers	1-4	5-8	9-12	5-8	9-12	13-17	13-17
	Number of impellers	1-4	1-3	1-3	4-5	4 -5	1-3	4-5
37	O-ring 160 x 2	4	8	12	5	9	17	14
45	Neck ring	4	4	4	5	5	4	5
47	Bearing (Graflon)	1	1	1	2	2	1	2
47	Bearing (SiC)	1	1	1	2	2	1	2
47c	Bush	3	3	3	3	3	3	3
47d	Lock ring	4	4	4	5	5	4	5
49c	Wear ring	4	4	4	5	5	4	5
65	Neck ring retainer	4	4	4	5	5	4	5

Bearing

Pos.	Pump type	MTR 32			MTR 45		MTR 64	
	Number of chambers	1-4	5-8	9-18	1-4	5-17	1-4	5-17
	Kit No	96430821	96430822	96430823	96430824	96430825	96430826	96430827
47a	Bearing	1	2	3	1	2	1	2

Coupling complete

Pos.	Motor/pump shaft diameter [mm]	24/22	28/22	38/22	42/22	48/22	55/22	28.6/22	34.9/22	41.2/22
	Kit No	*96430829*	*96430830*	*96430831*	*96430832*	*96430833*	*96430834*	*96430835*	*96430836*	*96430837*
8	Coupling	1	1	1	1	1	1	1	1	1

Kit, bearing

Pos.	Description	98629744
47	Bearing ring	3
47d	Lock ring	3

MTR 32, 45, 64

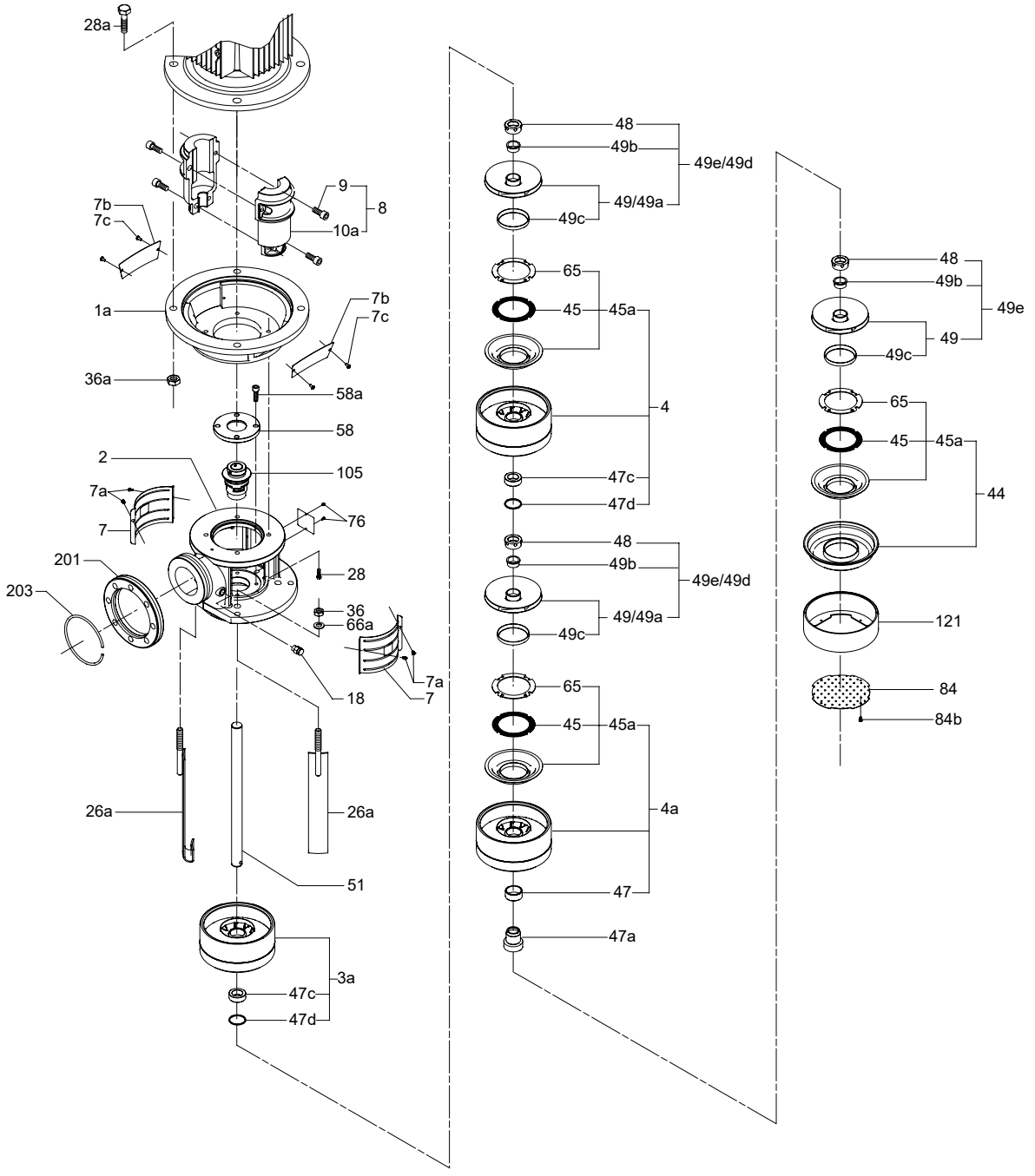
28a
9
8
10a
7b
7c
1a
7b
7c
36a
58a
58
2
105
7a
7
76
201
28
203
36
66a
7a
7
18
26a
26a
51
3a
47c
47d
48
49b
49e/49d
49/49a
49c
65
45
45a
4
47c
47d
48
49b
49e/49d
49/49a
49c
65
45
45a
4a
47
47a
48
49b
49e
49
49c
65
45
45a
44
121
84
84b
TM014626

MTR 32, 45, 64, 90, model B

Shaft seal

Pos.	Kit No	96441768	96525458	96525490	96436727	96533367	96533369
	Description	HUUV	HQQE	HQQV	HUUE	HUUK	HQQK
105	Shaft seal	1	1	1	1	1	1

Wear parts, MTR 32

Pos.	Kit No	98628296	98628298	98628337	98629661	98629668	98629669	98629682	98629683	98629684
	Number of chambers	1-4	5-8	9-12	5-8	9-14	9-14	15-18	15-18	15-18
	Number of impellers	1-4	1-3	1-3	5-8	4-8	9-14	1-3	4-8	9-14
45	Seal ring	4	4	4	8	8	14	4	8	14
47c	Bush	3	3	3	6	6	9	3	6	9
47d	Lock ring	4	4	4	8	8	14	4	8	14
49c	Wear ring	4	4	4	8	8	14	4	8	14
65	Top for neck ring	4	4	4	8	8	14	4	8	14
37	O-ring	4	8	14	4	11	6	6	15	10
-	Adjustment fork	1	1	1	1	1	1	1	1	1

Wear parts, MTR 45

Pos.	Kit No	98629686	98629689	98629690	98629716	98629718	98629719	98629732
	Number of chambers	1-4	5-8	9-12	5-8	9-12	13-17	13-17
	Number of impellers	1-4	1-3	1-3	4-8	4-8	1-3	4-8
45	Seal ring	4	4	4	8	8	4	8
47c	Bush	3	3	3	6	6	3	6
47d	Lock ring	4	4	4	8	8	4	8
49c	Wear ring	4	4	4	8	8	4	8
65	Top for neck ring	4	4	4	8	8	4	8
37	O-ring	4	8	12	5	9	13	13
64a	Spacer	1	1	1	1	1	1	1
-	Adjustment fork	1	1	1	1	1	1	1

Wear parts, MTR 64

Pos.	Kit No	98629735	98629736	98629738	98629739	98629740	98629741	98629743
	Number of chambers	1-4	5-8	9-12	5-8	9-12	13-17	13-17
	Number of impellers	1-4	1-3	1-3	4-5	4-5	1-3	4-5
45	Seal ring	4	4	4	5	5	4	5
47c	Bush	3	3	3	3	4	3	3
47d	Lock ring	4	4	4	5	5	4	5
49c	Wear ring	4	4	4	5	5	4	5
65	Top for neck ring	4	4	4	5	5	4	5
37	O-ring	4	8	8	5	8	8	8
64a	Spacer	1	1	1	1	1	1	1
-	Adjustment fork	1	1	1	1	1	1	1

Chamber with bearing

Type	Kit No		
	MTR 32	MTR 45	MTR 64
SIC/SIC	98497462	98497485	98497500

Content

Pos.	Description	Quantity
4a	Chamber cpl.	1
47a	Rotating bearing	1

Coupling complete

Pos.	Motor/pump shaft diameter [mm]	24/22	28/22	38/22	42/22	48/22	55/22	28.6/22	34.9/22	41.2/22
	Kit No	96430829	96430830	96430831	96430832	96430833	96430834	96430835	96430836	96430837
8	Coupling	1	1	1	1	1	1	1	1	1

MTR 32, 45, 64, 90, model B

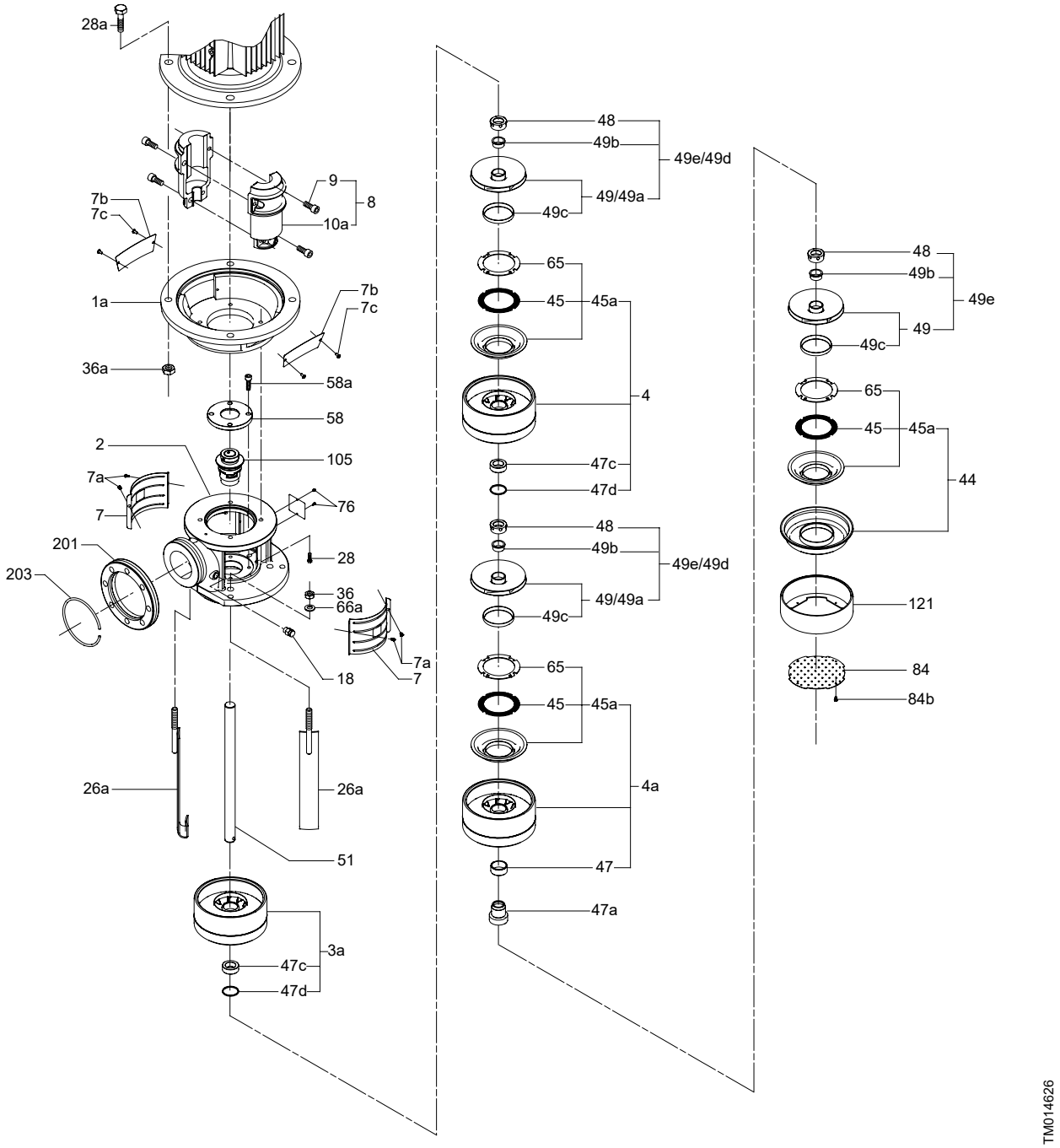

MTR 32, 45, 64, model C with drainage back to tank

Shaft seal

Pos.	Kit No	94541768	94541746	94525490	94536727	94533367	94533369	94558309
	Description	HUUV	HQQE	HQQV	HUUE	HUUK	HQQK	HUQE
105	Shaft seal	1	1	1	1	1	1	1
183	Lip seal	1	1	1	1	1	1	1
100	Seal washer	3	3	3	3	3	3	3
25	Plug	1	1	1	1	1	1	1
-	Adjusting fork	1	1	1	1	1	1	1

Wear parts, MTR 32

Pos.	Kit No	98628296	98628298	98628337	98629661	98629668	98629669	98629682	98629683	98629684
	Number of chambers	1-4	5-8	9-12	5-8	9-14	9-14	15-18	15-18	15-18
	Number of impellers	1-4	1-3	1-3	5-8	4-8	9-14	1-3	4-8	9-14
45	Seal ring	4	4	4	8	8	14	4	8	14
47c	Bush	3	3	3	6	6	9	3	6	9
47d	Lock ring	4	4	4	8	8	14	4	8	14
49c	Wear ring	4	4	4	8	8	14	4	8	14
65	Top for neck ring	4	4	4	8	8	14	4	8	14
37	O-ring	4	8	14	4	11	6	6	15	10
-	Adjustment fork	1	1	1	1	1	1	1	1	1

Wear parts, MTR 45

Pos.	Kit No	98629686	98629689	98629690	98629716	98629718	98629719	98629732
	Number of chambers	1-4	5-8	9-12	5-8	9-12	13-17	13-17
	Number of impellers	1-4	1-3	1-3	4-8	4-8	1-3	4-8
45	Seal ring	4	4	4	8	8	4	8
47c	Bush	3	3	3	6	6	3	6
47d	Lock ring	4	4	4	8	8	4	8
49c	Wear ring	4	4	4	8	8	4	8
65	Top for neck ring	4	4	4	8	8	4	8
37	O-ring	4	8	12	5	9	13	13
64a	Spacer	1	1	1	1	1	1	1
-	Adjustment fork	1	1	1	1	1	1	1

Wear parts, MTR 64

Pos.	Kit No	98629735	98629736	98629738	98629739	98629740	98629741	98629743
	Number of chambers	1-4	5-8	9-12	5-8	9-12	13-17	13-17
	Number of impellers	1-4	1-3	1-3	4-5	4-5	1-3	4-5
45	Seal ring	4	4	4	5	5	4	5
47c	Bush	3	3	3	3	4	3	3
47d	Lock ring	4	4	4	5	5	4	5
49c	Wear ring	4	4	4	5	5	4	5
65	Top for neck ring	4	4	4	5	5	4	5
37	O-ring	4	8	8	5	8	8	8
64a	Spacer	1	1	1	1	1	1	1
-	Adjustment fork	1	1	1	1	1	1	1

Chamber with bearing

Type	Kit No		
	MTR 32	MTR 45	MTR 64
SIC/SIC	98497462	98497485	98497500

Content

Pos.	Description	Quantity
4a	Chamber cpl.	1
47a	Rotating bearing	1

Coupling complete

Pos.	Motor/pump shaft diameter [mm]	24/22	28/22	38/22	42/22	48/22	55/22	28.6/22	34.9/22	41.2/22
	Kit No	*96430829*	*96430830*	*96430831*	*96430832*	*96430833*	*96430834*	*96430835*	*96430836*	*96430837*
8	Coupling	1	1	1	1	1	1	1	1	1

MTR 32, 45, 64, model C with drainage back to tank

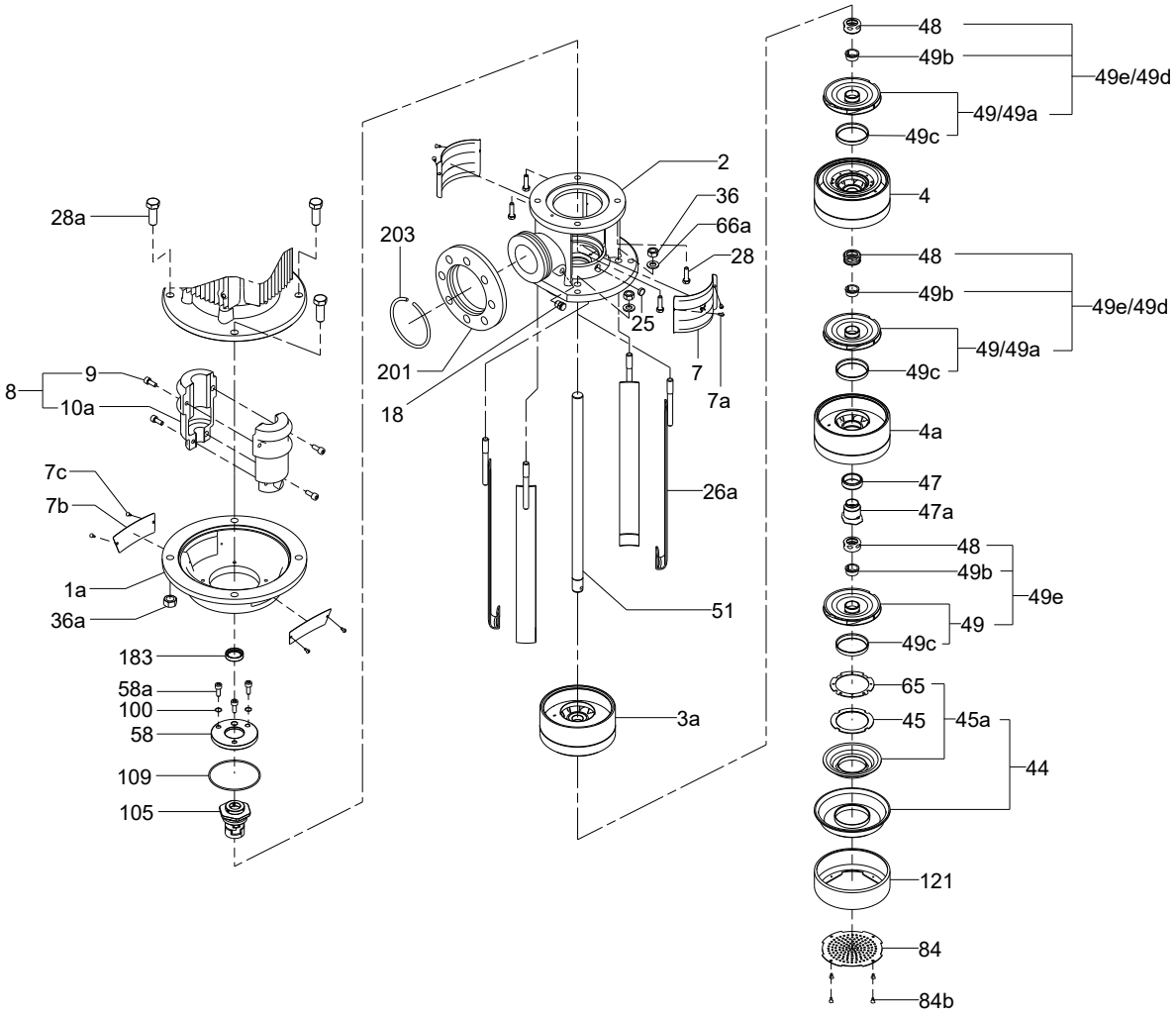

53. MTS

MTS, model A

Bare shaft pump end

Model	Description	Kit No
MTS 20	R28 DQ Tank top, Pipe	*98486932*
	R38 DQ Tank top, Pipe	*98488444*
	R46 DQ Tank top, Pipe	*98488588*
	R56 DQ Tank top, Pipe	*98488615*
	R28 D8.6 Dry installed, SAE	*98488731*
	R38 D8.6 Dry installed, SAE	*98488736*
	R46 D8.6 Dry installed, SAE	*98488738*
	R56 D8.6 Dry installed, SAE	*98488740*
MTS 40	R38 DQ Tank top, Pipe	*98488617*
	R46 DQ Tank top, Pipe	*98488619*
	R38 D8.6 Dry installed, SAE	*98488798*
	R46 D8.6 Dry installed, SAE	*98488800*
MTS 80	R36 DQ Tank top, Pipe	*98488641*
	R46 DQ Tank top, Pipe	*98488684*
	R36 D8.6 Dry installed, SAE	*98488812*
	R46 D8.6 Dry installed, SAE	*98488813*
MTS 140	R39 DQ Tank top, Pipe	*98488706*
	R46 DQ Tank top, Pipe	*98488707*
	R39 D8.6 Dry installed, SAE	*98488814*
	R46 D8.6 Dry installed, SAE	*98488815*
MTS 210	R40 D8.6 Dry installed, SAE	*98488817*
	R46 D8.6 Dry installed, SAE	*98488832*
MTS 280	R43 D8.6 Dry installed, SAE	*98488833*
	R46 D8.6 Dry installed, SAE	*98488835*
MTS 440	R40 D8.6 Dry installed, SAE	*98488836*
	R46 D8.6 Dry installed, SAE	*98488838*

Coupling MG 160 - MTS 20/40/80

Content description	Kit No
Coupling half for motor 42x45	*96960307*
Coupling half for pump 19x45	
Coupling inner part	

Mechanical seal

Description	Pos. No	Kit No
MTS 20/40/80 D8,6	186	*96895832*
MTS 140/210 D8,6		*96895833*
MTS 280 D8,6		*96895834*
MTS 440 D8,6		*96895835*

Shaft seal ring

Description	Pos. No	Kit No
MTS 20/40/80 DQ	183	*96895819*
MTS 140 DQ		*96895821*

Wear part kit

Description	Kit No
MTS 20	*96895836*
MTS 40	*96895837*
MTS 80	*96895838*
MTS 140	*96895839*
MTS 210	*96895840*
MTS 280	*96895841*
MTS 440	*96895852*

Wear part kit content	Pos. No
Pressure balancing bush	26
Gasket [1)]	100
O-rings	121, 122
Seal ring	140
Thrust disc [1)]	230
Circlip [1)]	252
Deep-groove ball bearing	292

1) Only for models MTS 20, 40.

MTS 20, 40, model A

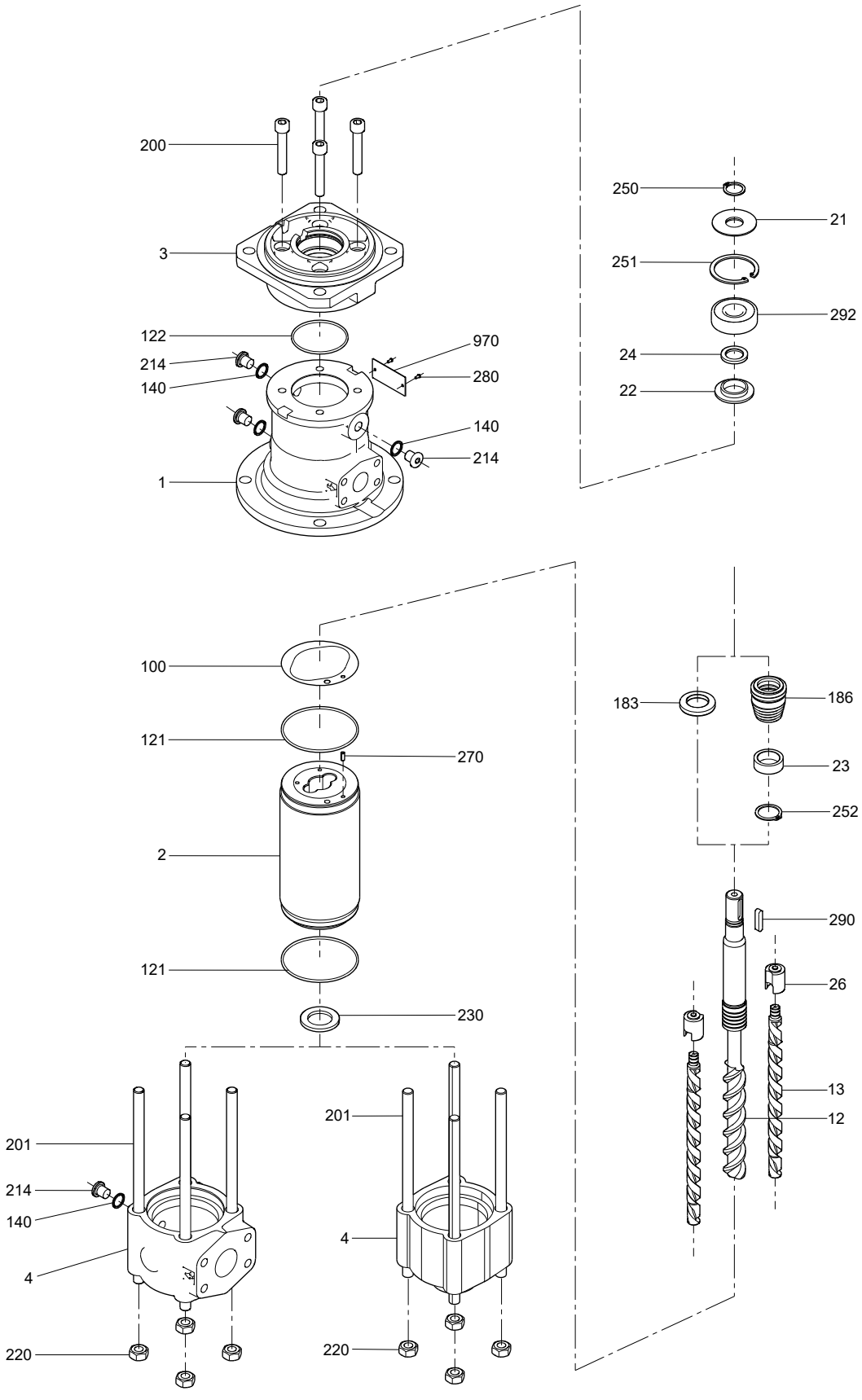

MTS 80, 140, model A

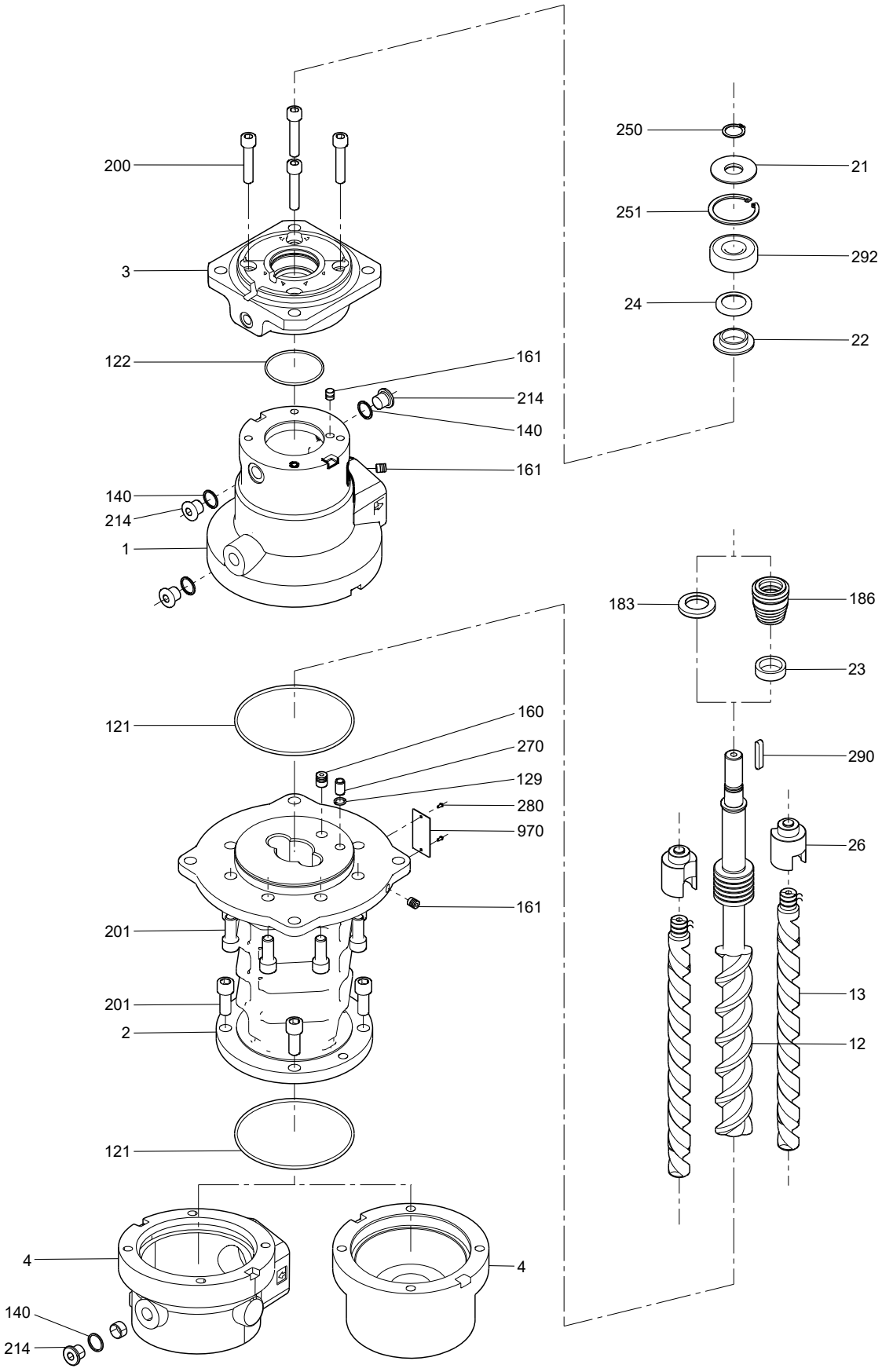

MTS 210, 280, 440, model A

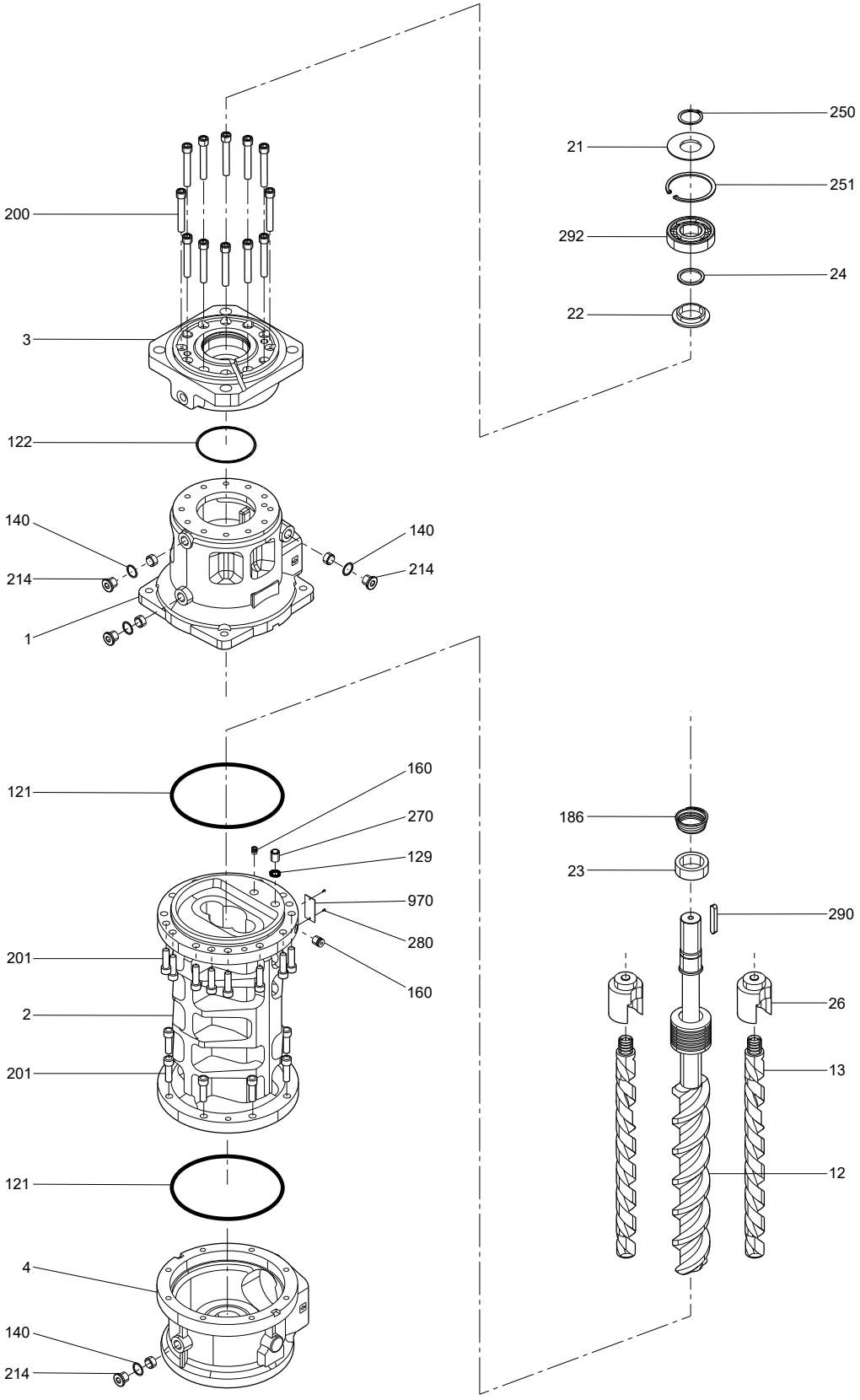

MTS, model C

Bare shaft pump end

Model	Description	Kit No
MTS 20	R28 DQ Tank top, Pipe	*98486932*
	R38 DQ Tank top, Pipe	*98488444*
	R46 DQ Tank top, Pipe	*98488588*
	R56 DQ Tank top, Pipe	*98488615*
	R28 D8.6 Dry installed, SAE	*98488731*
	R38 D8.6 Dry installed, SAE	*98488736*
	R46 D8.6 Dry installed, SAE	*98488738*
	R56 D8.6 Dry installed, SAE	*98488740*
MTS 40	R38 DQ Tank top, Pipe	*98488617*
	R46 DQ Tank top, Pipe	*98488619*
	R38 D8.6 Dry installed, SAE	*98488798*
	R46 D8.6 Dry installed, SAE	*98488800*

Coupling MG 160 - MTS 20/40/80

Content description	Kit No
Coupling half for motor 42x45	*96960307*
Coupling half for pump 19x45	
Coupling inner part	

Hose kit - MTS 20/40

Content description	Pos. No	Kit No
Hose (160 mm, transparent)	420	*99791312*
Quick adapter	400	

Shaft seal ring

Description	Pos. No	Kit No
MTS 20	186, 187	*99791291*
MTS 40		*99791292*

Mechanical seal

Description	Pos. No	Kit No
MTS 20	170, 183	*99791303*
MTS 40		*99791304*

Wear part kit

Description	Kit No
MTS 20	*99791305*
MTS 40	*99791310*

Wear part kit content	Pos. No
Gasket	100
O-rings	121, 132
Seal rings	140, 141, 142, 143, 144
Secondary seal	170
Disk	231
Circlips	250, 254
Supporting washer	264
Shaft key	290
Bearing	292

MTS 20, 40

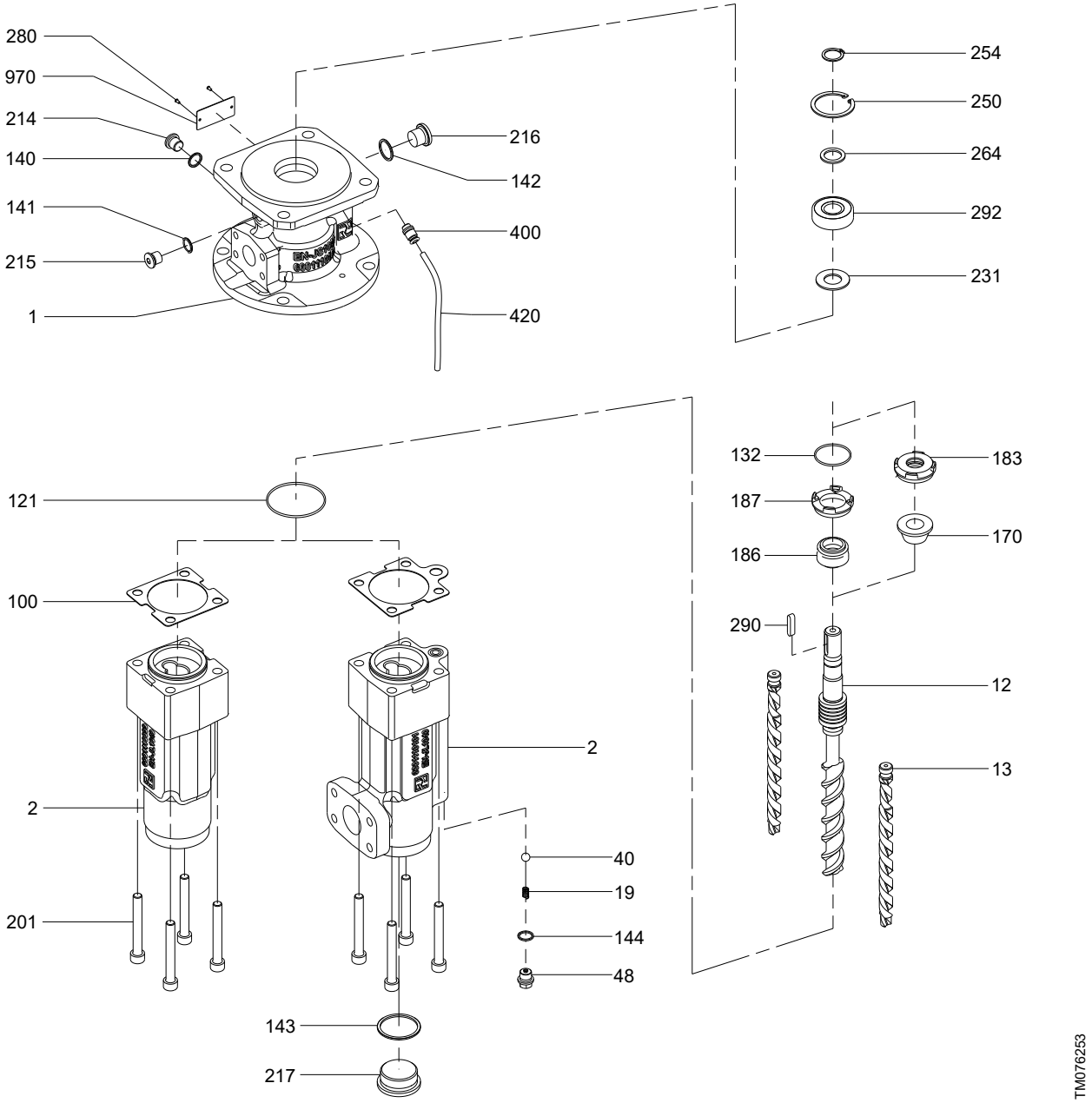
280
970
214
140
141
215
1
216
142
400
420
254
250
264
292
231
121
100
2
2
201
40
19
144
48
143
217
132
187
186
290
183
170
12
13
TM076253

54. MULTILIFT

First generation, until June 2012

M

50/60 Hz

LC 221 controller (Replacement kit for LC 109)

P/N MULTILIFT	MULTILIFT	Old LC 109	New LC 221	Description	
96075436	M.12.1.4 1X230V	*96075505*	*98376398*	Kit, LC 221.1.230.1.10.60	with sensor pipe and 4m pressure tube
96075443	M.15.1.4 1X230V	*96075506*	*98376398*	Kit, LC 221.1.230.1.10.60	with sensor pipe and 4m pressure tube
96075441	M.12.3.4 3X400V	*96472552*	*98376399*	Kit, LC 221.1.400.3.6 MPU	with sensor pipe and 4m pressure tube
96075444	M.15.3.4 3X400V	*96482996*	*98376399*	Kit, LC 221.1.400.3.6 MPU	with sensor pipe and 4m pressure tube
96075438	M.22.3.4 3X400V	*96482996*	*98376399*	Kit, LC 221.1.400.3.6 MPU	with sensor pipe and 4m pressure tube
96075457	M.24.3.2 3X400V	*96482996*	*98376399*	Kit, LC 221.1.400.3.6 MPU	with sensor pipe and 4m pressure tube
96477865	M.32.3.2 3X400V	*96482996*	*98376400*	Kit, LC 221.1.400.3.8 MPU	with sensor pipe and 4m pressure tube
96075442	M.12.3.4 3X230V	*96482997*	*98377118*	Kit, LC 221.1.230.3.10 MPU	with sensor pipe and 4m pressure tube
96075445	M.15.3.4 3X230V	*96482997*	*98377118*	Kit, LC 221.1.230.3.10 MPU	with sensor pipe and 4m pressure tube
96075447	M.22.3.4 3X230V	*96482997*	*98377118*	Kit, LC 221.1.230.3.10 MPU	with sensor pipe and 4m pressure tube
96075449	M.24.3.2 3X230V	*96482997*	*98377118*	Kit, LC 221.1.230.3.10 MPU	with sensor pipe and 4m pressure tube
96477864	M.32.3.2 3X230V	*96482997*	*98377119*	Kit, LC 221.1.230.3.16 MPU	with sensor pipe and 4m pressure tube

Capacitor

Kit No	*96472490*	*96472493*
Description	**35 µF**	**50 µF**
Capacitor	1	1

CU 211 control unit

Kit No	*96472551*	*96472553*	*96472552*
Description	230 V 1-phase	230 V 3-phase	400 V 3-phase
Control unit	1	1	1

Flange

Pos.	Kit No	*91043772*
12	Discharge flange	1

Motor kits, complete

P/N	Description
96590668	KIT, MOTOR M15.1.4 1X230V
96590658	KIT, MOTOR M15.3.4 3X400V
96636455	KIT, MOTOR M22.3.4 3X230V
96590665	KIT, MOTOR M22.3.4 3X400V
91043566	KIT, MOTOR M24.3.2 3X400V
96636456	KIT, MOTOR M24.3.4 3X230V
96636458	KIT, MOTOR M32.3.2 3X230V
96590661	KIT, MOTOR M32.3.2 3X400V

Kit adapter flange for non-return valve, cast iron

Description/kit No	*96650143*
Flange NRV	1
Gasket DN80	1
Screw M8x65	5
Washer	5
O-ring D100x10	1
Screw M16X70 DIN 931	8
WASHER A17	8
Nut M16	8

Sensor (Replacement kit)

Pos.	Kit No	*98592984*
182	Kit, Sensor Multilift MSS/M/MD - MK1	1

Wear parts

Pos.	Description/kit No	*96475603*
55b	Screw	8
55c	Screw	3
55d	Washer	8
103	Seal ring	2
104	Seal ring	1
153	Ball bearing	1
154	Ball bearing	1
158	Corrugated spring	1
159a	O-ring	1
187	O-ring	1
187a	Lip seal	1
-	Oil 0.05 l	1

M

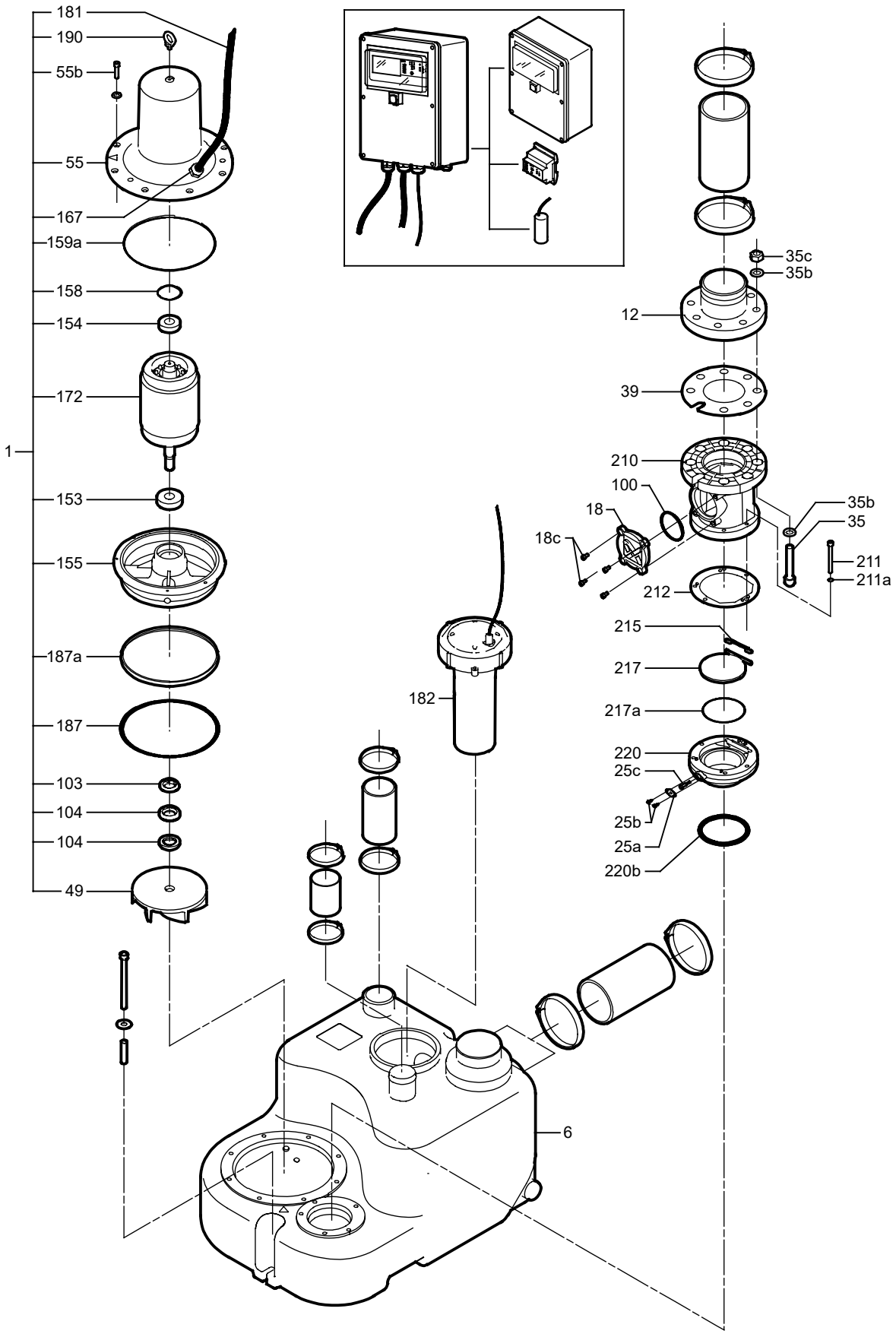
181
190
55b
55
167
159a
158
154
172
1
153
155
187a
187
103
104
104
49
182
6
35c
35b
12
39
210
100
18
18c
35b
35
211
211a
212
215
217
217a
220
25c
25b
25a
220b
TM024218

MD

LC 221 controller (Replacement kit for LCD 109)

P/N MULTILIFT	MULTILIFT	Old LCD 109	New LC 221	Description	
96075450	MD.15.1.4 1X230V	*96075509*	*98376401*	Kit, LC 221.2.230.1.10.60	with sensor pipe and 4m pressure tube
96075437	MD.15.3.4 3X400V	*96075510*	*98376402*	Kit, LC 221.2.400.3.6 MPU	with sensor pipe and 4m pressure tube
96075439	MD.22.3.4 3X400V	*96476699*	*98376402*	Kit, LC 221.2.400.3.6 MPU	with sensor pipe and 4m pressure tube
96075455	MD.24.3.2 3X400V	*96476699*	*98376402*	Kit, LC 221.2.400.3.6 MPU	with sensor pipe and 4m pressure tube
96477866	MD.32.3.2 3X400V	*96476699*	*98376403*	Kit, LC 221.2.400.3.8 MPU	with sensor pipe and 4m pressure tube
96075452	MD.15.3.4 3X230V	*96075511*	*98377120*	Kit, LC 221.2.230.3.10 MPU	with sensor pipe and 4m pressure tube
96075454	MD.22.3.4 3X230V	*96476700*	*98377120*	Kit, LC 221.2.230.3.10 MPU	with sensor pipe and 4m pressure tube
96075456	MD.24.3.2 3X230V	*96476700*	*98377120*	Kit, LC 221.2.230.3.10 MPU	with sensor pipe and 4m pressure tube
96477867	MD.32.3.2 3X230V	*96476700*	*98377141*	Kit, LC 221.2.230.3.16 MPU	with sensor pipe and 4m pressure tube

Capacitor

Kit No	*96472493*
Description	**50 µF**
Capacitor	1

CU 212 control unit

Kit No	*96472554*	*96472556*	*96472555*
Description	**230 V 1-phase**	**230 V 3-phase**	**400 V 3-phase**
CU 212 control unit	1	1	1

Discharge flange

Pos.	Kit No	*91043772*
12	Discharge flange	1

Motor kits, complete

P/N	Description
96590668	KIT, MOTOR M15.1.4 1X230V
96590658	KIT, MOTOR M15.3.4 3X400V
96636455	KIT, MOTOR M22.3.4 3X230V
96590665	KIT, MOTOR M22.3.4 3X400V
91043566	KIT, MOTOR M24.3.2 3X400V
96636456	KIT, MOTOR M24.3.4 3X230V
96636458	KIT, MOTOR M32.3.2 3X230V
96590661	KIT, MOTOR M32.3.2 3X400V

Kit adapter flange for non-return valve, cast iron

Description/kit No	*96650143*
Flange NRV	1
Gasket DN80	1
Screw M8x65	5
Washer	5

Description/kit No	*96650143*
O-ring D100x10	1
Screw M16X70 DIN 931	8
WASHER A17	8
Nut M16	8

Sensor (Replacement kit)

Pos.	Kit No	*98592984*
182	Kit, Sensor Multilift MSS/M/MD - MK1	1

T-Connection

Pos.	Kit No	*96703850*
13	T-connection	1

Wear parts

Pos.	Description/kit No	*96475603*
55b	Screw	8
55c	Screw	3
55d	Washer	8
103	Seal ring	2
104	Seal ring	1
153	Ball bearing	1
154	Ball bearing	1
158	Corrugated spring	1
159a	O-ring	1
187	O-ring	1
187a	Lip seal	1
-	Oil 0.05 l	1

MD

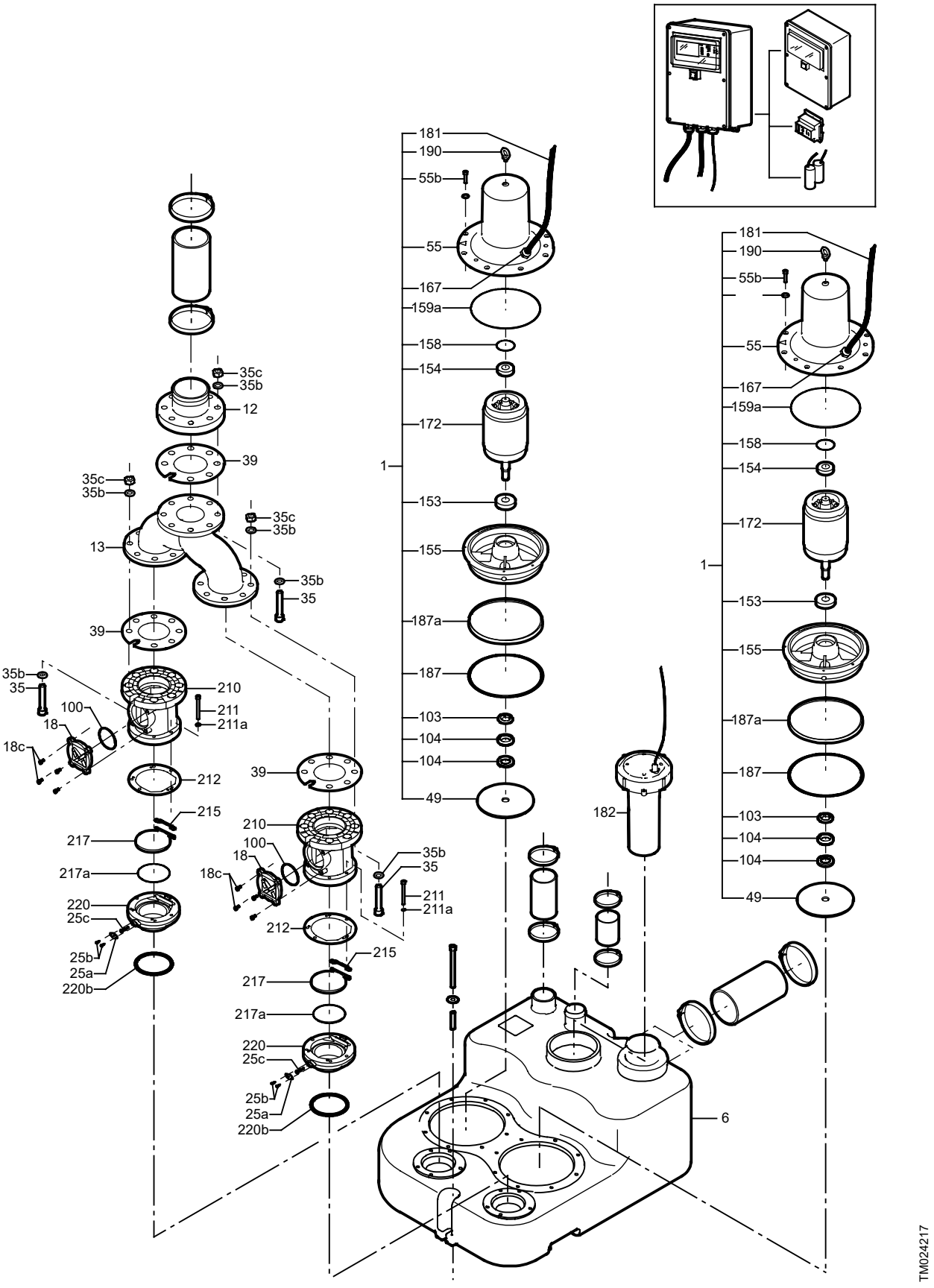
181
190
55b
55
167
159a
158
154
172
1
153
155
187a
187
103
104
104
49
35c
35b
12
39
35c
35b
13
35c
35b
35b
35
39
35b
35
210
100
211
211a
18
18c
212
215
217
217a
220
25c
25b
25a
220b
39
210
100
18
18c
35b
35
211
211a
212
215
217
217a
220
25c
25b
25a
220b
182
6
181
190
55b
55
167
159a
158
154
172
1
153
155
187a
187
103
104
104
49
TM024217

MSS
50/60 Hz

LC 221 controller (Replacement kit for LC 109)

P/N MULTILIFT	MULTILIFT	Old LC(D) 109	New P/N	Description	
96610038	MSS.12.1.4 1X230V	*96075505*	*98376398*	Kit, LC 221.1.230.1.10.60	with sensor pipe and 4m pressure tube
96610039	MSS.12.3.4 3X400V	*96472552*	*98376399*	Kit, LC 221.1.400.3.6 MPU	with sensor pipe and 4m pressure tube
96610040	MSS.12.3.4 3X230V	*96075508*	*98377118*	Kit, LC 221.1.230.3.10 MPU	with sensor pipe and 4m pressure tube

Capacitor

Kit No	*96472490*	*96472493*
Description	**35 µF**	**50 µF**
Capacitor	1	1

CU 211 control unit

Control unit	CU 211		
Kit No	***96472551***	***96472553***	***96472552***
Description	230 V single-phase	230 V three-phase	400 V three-phase
CU 211 control unit	1	1	1

Flange

Pos.	Kit No	*91043772*
12	Discharge flange	1

Motor kits, complete

P/N	Description
96590654	KIT, MOTOR M12.1.4 1X230V
91043561	KIT, MOTOR M12.3.4 3X400V

Kit adapter flange for non-return valve, cast iron

Description/kit No	*96650143*
Flange NRV	1
Gasket DN80	1
Screw M8x65	5
Washer	5
O-ring D100x10	1
Screw M16X70 DIN 931	8
WASHER A17	8
Nut M16	8

Sensor (Replacement kit)

Pos.	Kit No	*98592984*
182	Kit, Sensor Multilift MSS/M/MD - MK1	1

Wear parts

Pos.	Description/kit No	*96475603*
55b	Screw	8
55c	Screw	3
55d	Washer	8
103	Seal ring	2
104	Seal ring	1
153	Ball bearing	1
154	Ball bearing	1
158	Corrugated spring	1
159a	O-ring	1
187	O-ring	1
187a	Lip seal	1
-	Oil 0.05 l	1

MSS

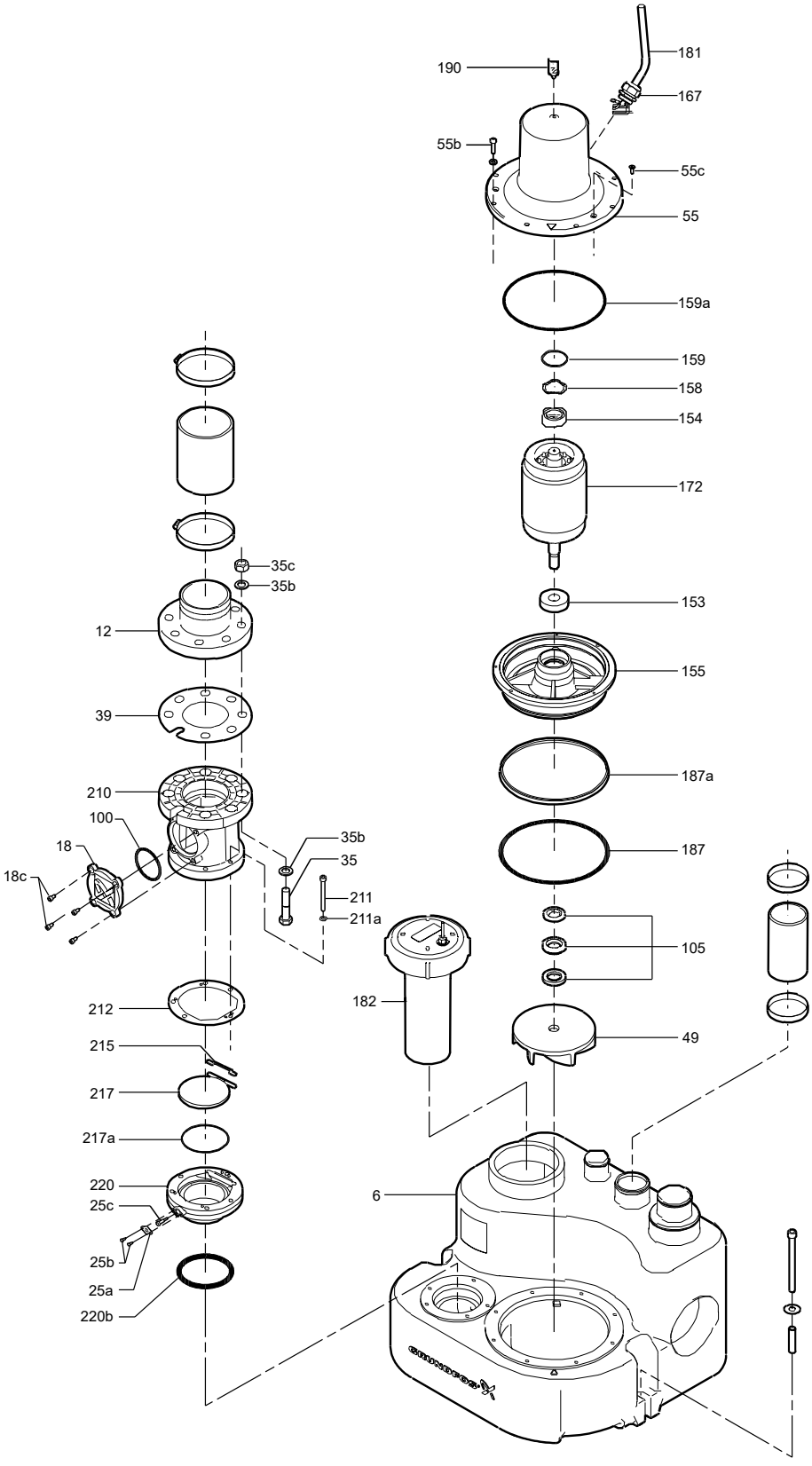
181
190
167
55b
55c
55
159a
159
158
154
172
153
155
187a
187
105
49
182
6
35c
35b
12
39
210
100
18
18c
35b
35
211
211a
212
215
217
217a
220
25c
25b
25a
220b
TM033449

MLD

LC 221 controller (Replacement kit for LCD 109)

P/N MULTILIFT	MULTILIFT	Old LC(D) 109	New P/N	Description	
96610012	MLD.15.1.4 1X230V	*96075509*	*98167915*	Kit, LC 221.2.230.1.10.60	with sensor pipe and 4m pressure tube
96610014	MLD.15.3.4 3X400V	*96075510*	*98369890*	Kit, LC 221.2.400.3.6 MPU	with sensor pipe and 4m pressure tube
96610018	MLD.22.3.4 3X400V	*96476699*	*98369890*	Kit, LC 221.2.400.3.6 MPU	with sensor pipe and 4m pressure tube
96610032	MLD.24.3.2 3X400V	*96476699*	*98369890*	Kit, LC 221.2.400.3.6 MPU	with sensor pipe and 4m pressure tube
96610035	MLD.32.3.2 3X400V	*96476699*	*98167919*	Kit, LC 221.2.400.3.8 MPU	with sensor pipe and 4m pressure tube
96610015	MLD.15.3.4 3X230V	*96075511*	*98167918*	Kit, LC 221.2.230.3.16 MPU	with sensor pipe and 4m pressure tube
96610030	MLD.22.3.4 3X230V	*96476700*	*98167918*	Kit, LC 221.2.230.3.16 MPU	with sensor pipe and 4m pressure tube
96610033	MLD.24.3.2 3X230V	*96476700*	*98167918*	Kit, LC 221.2.230.3.16 MPU	with sensor pipe and 4m pressure tube
96610037	MLD.32.3.2 3X230V	*96476700*	*98167918*	Kit, LC 221.2.230.3.16 MPU	with sensor pipe and 4m pressure tube

Capacitor

Kit No	*96472490*	*96472493*
Description	**35 µF**	**50 µF**
Capacitor	1	1

CU 212 control unit

Kit No	*96472554*	*96472556*	*96472555*
Description	230 V 1-phase	230 V 3-phase	400 V 3-phase
Control unit	1	1	1

Discharge flange

Pos.	Kit No	*91043772*
12	Discharge flange	1

Motor kits, complete

P/N	Description
96590668	KIT, MOTOR M15.1.4 1 x 230 V
96590658	KIT, MOTOR M15.3.4 3 x 400 V
96636455	KIT, MOTOR M22.3.4 3 x 230 V
96590665	KIT, MOTOR M22.3.4 3 x 400 V
91043566	KIT, MOTOR M24.3.2 3 x 400 V
96636456	KIT, MOTOR M24.3.4 3 x 230 V
96636458	KIT, MOTOR M32.3.2 3 x 230 V
96590661	KIT, MOTOR M32.3.2 3 x 400 V

Kit adapter flange for non-return valve, cast iron

Description/kit No	*96650143*
Flange NRV	1
Gasket DN80	1
Screw M8x65	5
Washer	5
O-ring D100x10	1
Screw M16X70 DIN 931	8
WASHER A17	8
Nut M16	8

Sensor (Replacement kit)

Pos.	Kit No	*98628411*
182	Kit, Sensor MULTILIFT MLD/MD1/MDV Mk.1	1

T-Connection

Pos.	Kit No	*96703850*
13	T-connection	1

Wear parts

Pos.	Description/kit No	*96475603*
55b	Screw	8
55c	Screw	3
55d	Washer	8
103	Seal ring	2
104	Seal ring	1
153	Ball bearing	1
154	Ball bearing	1
158	Corrugated spring	1
159a	O-ring	1
187	O-ring	1
187a	Lip seal	1
-	Oil 0.05 l	1

MLD

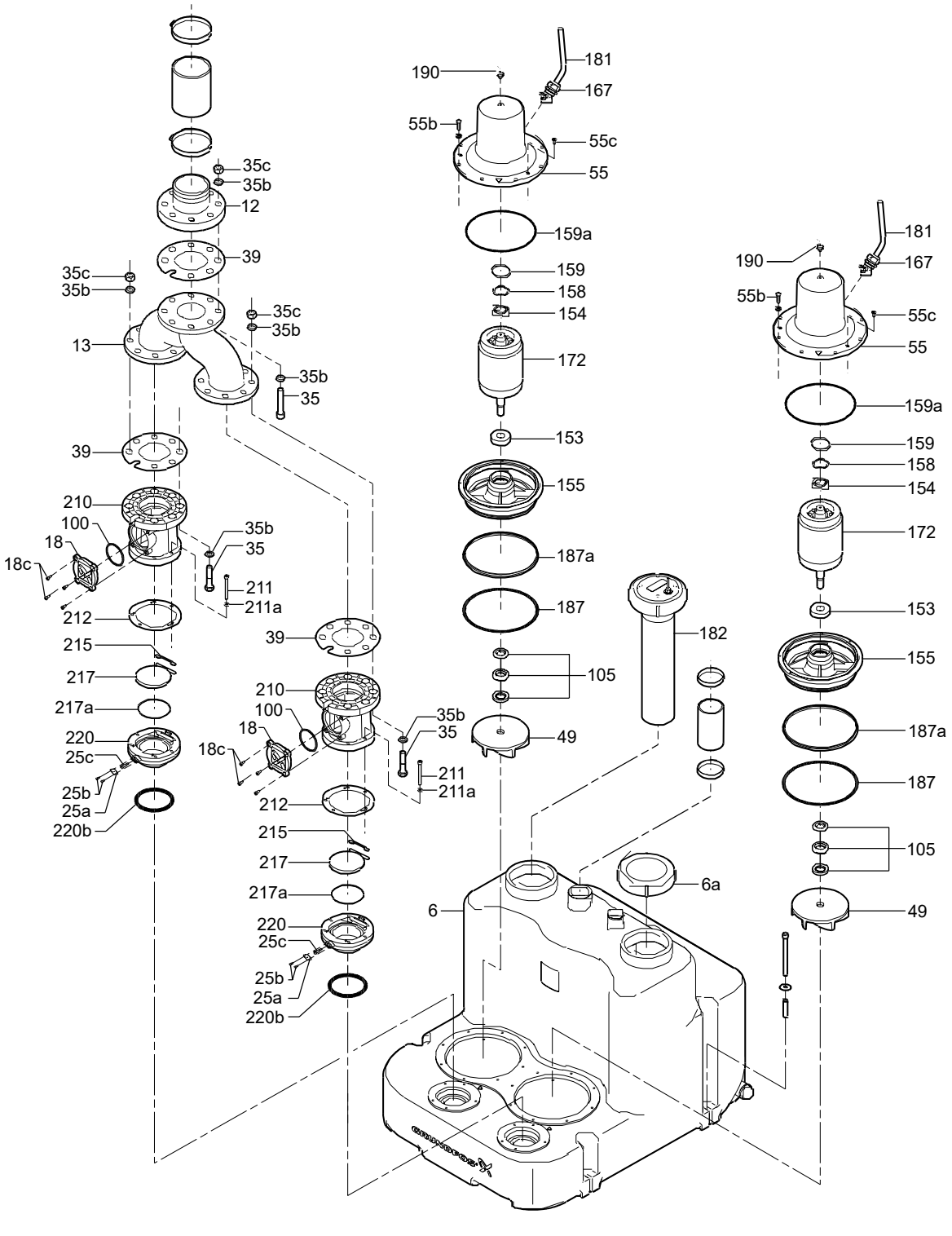
190
181
167
55b
55c
55
159a
159
158
154
172
153
155
187a
187
105
49
182
6a
6
35c
35b
12
39
13
35
210
100
18
18c
211
211a
212
215
217
217a
220
25c
25b
25a
220b
TM033452

55. NB

Model B

50/60 Hz

Contents of this chapter

Kit type
Shaft seal
Spacer ring for shaft seal
O-ring
Shaft
Wear ring
Impeller
Nut, washer and key for impeller
Sensor for NBE Series 2000

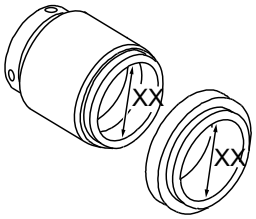

Shaft seal		
MG13/RMG13	**HJ92N / HJ977**	**M7N**
		

Shaft seal designs

Content

Pos.	Description	BAQE	BAQV	BQQE	BQQV	BBQE	BBQV	DAQF
105	Shaft seal	1	1	1	1	1	1	1
Burgmann specification	Type	MG13/ XX-G6	MG13/ XX-G6	MG13/ XX-G6	MG13/ XX-G6	MG13/ XX-G6	MG13/ XX-G6	HJ92N/ XX-00
	Material	Material code: **A, B, C, D, E, F, G, H, I, J, K, M, N, P, S, T, U, W**						
		AQ1E GG	AQ1V GG	Q7Q7E GG	Q7Q7V GG	BQ1E GG	BQ1V GG	AQ1V9 GG
		Material code: **L, R**						
		AQ1E MM	AQ1V MM	Q1Q1E MM	Q1Q1V MM	BQ1E MM	BQ1V MM	AQ1V9 MM

Pos.	Description	DQQE	DQQV	DQQX	DQQK	AQQE	AQQX	AQQK	AQQV	AQAE	AQAV
105	Shaft seal	1	1	1	1	1	1	1	1	1	1
Burgmann specification	Type	HJ92N/ XX-00	HJ92N/ XX-00	HJ92N/ XX-00	HJ92N/ XX-00	M7N/ XX-00	M7N/ XX-00	M7N/ XX-00	M7N/ XX-00	M7N/ XX-00	M7N/ XX-00
	Material	Material code: **A, B, C, D, E, F, G, H, I, J, K, M, N, P, S, T, U, W**									
		Q6Q6E GG	Q6Q6V GG	Q6Q6X4 GG	Q6Q6K23 GG	Q1Q1E GG	Q1Q1X4 GG	Q1Q1K23 GG	Q1Q1V GG	Q1AE GG	Q1AV GG
		Material code: **L, R**									
		Q6Q6E MM	Q6Q6V MM	Q6Q6X4MM	Q6Q6K23MM	Q1Q1E MM	Q1Q1X4MM	Q1Q1K23 MM	Q1Q1V MM	Q1AE MM	Q1AV MM

Note: XX = 28, 38, 48, 55 or 60. XX is the internal diameter of the shaft seal.

Shaft seal

Material code: A, B, C, D, E, F, G, H, I, J, K, M, N, P, S, T, U, W

The material code can be found in the type designation on the nameplate.

NB 32 -125 .1 /104 A -F -A -BAQE

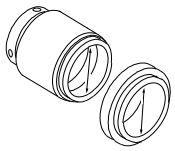

Shaft seal diameter

Pump type		Shaft seal dia.	BAQE	BAQV	BQQE	BQQV	BQQV [1]	BBQE	BBQV	BQBE	DAQF
			MG13	MG13	MG13	MG13	MG13	MG13	MG13	RMG13	HJ92N
	125.1	28	96488302	96548353	98434904	98434905	98670789	96551963	97769885	96548351	96548355
	160.1	28	96488302	96548353	98434904	98434905	98670789	96551963	97769885	96548351	96548355
	200.1	28	96488302	96548353	98434904	98434905	98670789	96551963	97769885	96548351	96548355
32 -	125	28	96488302	96548353	98434904	98434905	98670789	96551963	97769885	96548351	96548355
	160	28	96488302	96548353	98434904	98434905	98670789	96551963	97769885	96548351	96548355
	200	28	96488302	96548353	98434904	98434905	98670789	96551963	97769885	96548351	96548355
	250	28	96488302	96548353	98434904	98434905	98670789	96551963	97769885	96548351	96548355
	125	28	96488302	96548353	98434904	98434905	98670789	96551963	97769885	96548351	96548355
	160	28	96488302	96548353	98434904	98434905	98670789	96551963	97769885	96548351	96548355
40 -	200	28	96488302	96548353	98434904	98434905	98670789	96551963	97769885	96548351	96548355
	250	28	96488302	96548353	98434904	98434905	98670789	96551963	97769885	96548351	96548355
	315	38	96537605	96548357	98434906	98434908	98670790	96551928	97769887	96548356	96548359
	125	28	96488302	96548353	98434904	98434905	98670789	96551963	97769885	96548351	96548355
	160	28	96488302	96548353	98434904	98434905	98670789	96551963	97769885	96548351	96548355
50 -	200	28	96488302	96548353	98434904	98434905	98670789	96551963	97769885	96548351	96548355
	250	28	96488302	96548353	98434904	98434905	98670789	96551963	97769885	96548351	96548355
	315	38	96537605	96548357	98434906	98434908	98670790	96551928	97769887	96548356	96548359
	125	28	96488302	96548353	98434904	98434905	98670789	96551963	97769885	96548351	96548355
	160	28	96488302	96548353	98434904	98434905	98670789	96551963	97769885	96548351	96548355
65 -	200	28	96488302	96548353	98434904	98434905	98670789	96551963	97769885	96548351	96548355
	250	38	96537605	96548357	98434906	98434908	98670790	96551928	97769887	96548356	96548359
	315	38	96537605	96548357	98434906	98434908	98670790	96551928	97769887	96548356	96548359
	160	28	96488302	96548353	98434904	98434905	98670789	96551963	97769885	96548351	96548355
	200	38	96537605	96548357	98434906	98434908	98670790	96551928	97769887	96548356	96548359
	250	38	96537605	96548357	98434906	98434908	98670790	96551928	97769887	96548356	96548359
80 -	315	38	96537605	96548357	98434906	98434908	98670790	96551928	97769887	96548356	96548359
	315 [2]	48	96306472	96658791	98434909	98434941	98670801	96658794	97769889	-	96658796
	400	48	96306472	96658791	98434909	98434941	98670801	96658794	97769889	-	96658796
	160	28	96488302	96548353	98434904	98434905	98670789	96551963	97769885	96548351	96548355
	200	38	96537605	96548357	98434906	98434908	98670790	96551928	97769887	96548356	96548359
	250	38	96537605	96548357	98434906	98434908	98670790	96551928	97769887	96548356	96548359
100 -	250 [2]	48	96306472	96658791	98434909	98434941	98670801	96658794	97769889	-	96658796
	315	38	96537605	96548357	98434906	98434908	98670790	96551928	97769887	96548356	96548359
	315 [2]	48	96306472	96658791	98434909	98434941	98670801	96658794	97769889	-	96658796
	400	48	96306472	96658791	98434909	98434941	98670801	96658794	97769889	-	96658796
	200	38	96537605	96548357	98434906	98434908	98670790	96551928	97769887	96548356	96548359
	250	38	96537605	96548357	98434906	98434908	98670790	96551928	97769887	96548356	96548359
125 -	250 [2]	48	96306472	96658791	98434909	98434941	98670801	96658794	97769889	-	96658796
	315	48	96306472	96658791	98434909	98434941	98670801	96658794	97769889	-	96658796
	400	48	96306472	96658791	98434909	98434941	98670801	96658794	97769889	-	96658796
	500	60	96658812	96658815	98434945	98434947	98670803	96658818	97769893	-	96658820

Pump type		Shaft seal dia.	BAQE	BAQV	BQQE	BQQV	BQQV [1]	BBQE	BBQV	BQBE	DAQF
			MG13	MG13	MG13	MG13	MG13	MG13	MG13	RMG13	HJ92N
150 -	200	38	96537605	96548357	98434906	98434908	98670790	96551928	97769887	96548356	96548359
	250	48	96306472	96658791	98434909	98434941	98670801	96658794	97769889	-	96658796
	315.1	48	96306472	96658791	98434909	98434941	98670801	96658794	97769889	-	96658796
	315.2	48	96306472	96658791	98434909	98434941	98670801	96658794	97769889	-	96658796
	315	48	96306472	96658791	98434909	98434941	98670801	96658794	97769889	-	96658796
	400	48	96306472	96658791	98434909	98434941	98670801	96658794	97769889	-	96658796
	400 [2]	55	96306475	96658801	98434943	98434944	98670802	96658804	97769891	-	96658807
	500	60	96658812	96658815	98434945	98434947	98670803	96658818	97769893	-	96658820
200 -	400	55	96306475	96658801	98434943	98434944	98670802	96658804	97769891	-	96658807
	450	55	96306475	96658801	98434943	98434944	98670802	96658804	97769891	-	96658807
250 -	350	55	96306475	96658801	98434943	98434944	98670802	96658804	97769891	-	96658807
	400	55	96306475	96658801	98434943	98434944	98670802	96658804	97769891	-	96658807
	450	60	96658812	96658815	98434945	98434947	98670803	96658818	97769893	-	96658820
	500	60	96658812	96658815	98434945	98434947	98670803	96658818	97769893	-	96658820

1) PWIS-free shaft seal.

2) Oversize pump.

Pump type		Shaft seal dia.	DQQE	DQQK	DQQV	DQQX	AQQE	AQQK	AQQV	AQQX	AQAE	AQAV
			HJ977GN	HJ977GN	HJ977GN	HJ977GN	M7N	M7N	M7N	M7N	M7N	M7N
32 -	125.1	28	97769895	97769911	97769899	97769907	96551965	97769915	96551967	97769903	96551964	96551966
	160.1	28	97769895	97769911	97769899	97769907	96551965	97769915	96551967	97769903	96551964	96551966
	200.1	28	97769895	97769911	97769899	97769907	96551965	97769915	96551967	97769903	96551964	96551966
	125	28	97769895	97769911	97769899	97769907	96551965	97769915	96551967	97769903	96551964	96551966
	160	28	97769895	97769911	97769899	97769907	96551965	97769915	96551967	97769903	96551964	96551966
	200	28	97769895	97769911	97769899	97769907	96551965	97769915	96551967	97769903	96551964	96551966
	250	28	97769895	97769911	97769899	97769907	96551965	97769915	96551967	97769903	96551964	96551966
40 -	125	28	97769895	97769911	97769899	97769907	96551965	97769915	96551967	97769903	96551964	96551966
	160	28	97769895	97769911	97769899	97769907	96551965	97769915	96551967	97769903	96551964	96551966
	200	28	97769895	97769911	97769899	97769907	96551965	97769915	96551967	97769903	96551964	96551966
	250	28	97769895	97769911	97769899	97769907	96551965	97769915	96551967	97769903	96551964	96551966
	315	38	97769897	97769913	97769901	97769909	96551960	97769917	96551962	97769905	96551929	96551961
50 -	125	28	97769895	97769911	97769899	97769907	96551965	97769915	96551967	97769903	96551964	96551966
	160	28	97769895	97769911	97769899	97769907	96551965	97769915	96551967	97769903	96551964	96551966
	200	28	97769895	97769911	97769899	97769907	96551965	97769915	96551967	97769903	96551964	96551966
	250	28	97769895	97769911	97769899	97769907	96551965	97769915	96551967	97769903	96551964	96551966
	315	38	97769897	97769913	97769901	97769909	96551960	97769917	96551962	97769905	96551929	96551961
65 -	125	28	97769895	97769911	97769899	97769907	96551965	97769915	96551967	97769903	96551964	96551966
	160	28	97769895	97769911	97769899	97769907	96551965	97769915	96551967	97769903	96551964	96551966
	200	28	97769895	97769911	97769899	97769907	96551965	97769915	96551967	97769903	96551964	96551966
	250	38	97769897	97769913	97769901	97769909	96551960	97769917	96551962	97769905	96551929	96551961
	315	38	97769897	97769913	97769901	97769909	96551960	97769917	96551962	97769905	96551929	96551961
80 -	160	28	97769895	97769911	97769899	97769907	96551965	97769915	96551967	97769903	96551964	96551966
	200	38	97769897	97769913	97769901	97769909	96551960	97769917	96551962	97769905	96551929	96551961
	250	38	97769897	97769913	97769901	97769909	96551960	97769917	96551962	97769905	96551929	96551961
	315	38	97769897	97769913	97769901	97769909	96551960	97769917	96551962	97769905	96551929	96551961
	315 [3]	48	97685509	97685516	97685511	97685514	96658799	97685504	96658800	97685501	96658797	96658798
	400	48	97685509	97685516	97685511	97685514	96658799	97685504	96658800	97685501	96658797	96658798

Pump type		Shaft seal dia.	DQQE	DQQK	DQQV	DQQX	AQQE	AQQK	AQQV	AQQX	AQAE	AQAV
			HJ977GN	HJ977GN	HJ977GN	HJ977GN	M7N	M7N	M7N	M7N	M7N	M7N
100 -	160	28	*97769895*	*97769911*	*97769899*	*97769907*	*96551965*	*97769915*	*96551967*	*97769903*	*96551964*	*96551966*
	200	38	*97769897*	*97769913*	*97769901*	*97769909*	*96551960*	*97769917*	*96551962*	*97769905*	*96551929*	*96551961*
	250	38	*97769897*	*97769913*	*97769901*	*97769909*	*96551960*	*97769917*	*96551962*	*97769905*	*96551929*	*96551961*
	250 [3)]	48	*97685509*	*97685516*	*97685511*	*97685514*	*96658799*	*97685504*	*96658800*	*97685501*	*96658797*	*96658798*
	315	38	*97769897*	*97769913*	*97769901*	*97769909*	*96551960*	*97769917*	*96551962*	*97769905*	*96551929*	*96551961*
	315 [3)]	48	*97685509*	*97685516*	*97685511*	*97685514*	*96658799*	*97685504*	*96658800*	*97685501*	*96658797*	*96658798*
	400	48	*97685509*	*97685516*	*97685511*	*97685514*	*96658799*	*97685504*	*96658800*	*97685501*	*96658797*	*96658798*
125 -	200	38	*97769897*	*97769913*	*97769901*	*97769909*	*96551960*	*97769917*	*96551962*	*97769905*	*96551929*	*96551961*
	250	38	*97769897*	*97769913*	*97769901*	*97769909*	*96551960*	*97769917*	*96551962*	*97769905*	*96551929*	*96551961*
	250 [3)]	48	*97685509*	*97685516*	*97685511*	*97685514*	*96658799*	*97685504*	*96658800*	*97685501*	*96658797*	*96658798*
	315	48	*97685509*	*97685516*	*97685511*	*97685514*	*96658799*	*97685504*	*96658800*	*97685501*	*96658797*	*96658798*
	400	48	*97685509*	*97685516*	*97685511*	*97685514*	*96658799*	*97685504*	*96658800*	*97685501*	*96658797*	*96658798*
	500	60	*97685598*	*97685610*	*97685602*	*97685606*	*96658823*	*97685590*	*96658824*	*97685586*	*96658821*	*96658822*
150 -	200	38	*97769897*	*97769913*	*97769901*	*97769909*	*96551960*	*97769917*	*96551962*	*97769905*	*96551929*	*96551961*
	250	48	*97685509*	*97685516*	*97685511*	*97685514*	*96658799*	*97685504*	*96658800*	*97685501*	*96658797*	*96658798*
	315.1	48	*97685509*	*97685516*	*97685511*	*97685514*	*96658799*	*97685504*	*96658800*	*97685501*	*96658797*	*96658798*
	315.2	48	*97685509*	*97685516*	*97685511*	*97685514*	*96658799*	*97685504*	*96658800*	*97685501*	*96658797*	*96658798*
	315	48	*97685509*	*97685516*	*97685511*	*97685514*	*96658799*	*97685504*	*96658800*	*97685501*	*96658797*	*96658798*
	400	48	*97685509*	*97685516*	*97685511*	*97685514*	*96658799*	*97685504*	*96658800*	*97685501*	*96658797*	*96658798*
	400 [3)]	55	*97685596*	*97685608*	*97685600*	*97685604*	*96658810*	*97685588*	*96658811*	*97685584*	*96658808*	*96658809*
	500	60	*97685598*	*97685610*	*97685602*	*97685606*	*96658823*	*97685590*	*96658824*	*97685586*	*96658821*	*96658822*
200 -	400	55	*97685596*	*97685608*	*97685600*	*97685604*	*96658810*	*97685588*	*96658811*	*97685584*	*96658808*	*96658809*
	450	55	*97685596*	*97685608*	*97685600*	*97685604*	*96658810*	*97685588*	*96658811*	*97685584*	*96658808*	*96658809*
250 -	350	55	*97685596*	*97685608*	*97685600*	*97685604*	*96658810*	*97685588*	*96658811*	*97685584*	*96658808*	*96658809*
	400	55	*97685596*	*97685608*	*97685600*	*97685604*	*96658810*	*97685588*	*96658811*	*97685584*	*96658808*	*96658809*
	450	60	*97685598*	*97685610*	*97685602*	*97685606*	*96658823*	*97685590*	*96658824*	*97685586*	*96658821*	*96658822*
	500	60	*97685598*	*97685610*	*97685602*	*97685606*	*96658823*	*97685590*	*96658824*	*97685586*	*96658821*	*96658822*

3) Oversize pump.

Shaft seal

Material code: L, R

The material code can be found in the type designation on the nameplate.

NB 32-125.1/142 A-F-L-BAQE

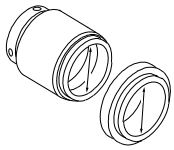

Shaft seal diameter

Pump type		Shaft seal dia.	BAQE	BAQV	BQQE	BQQV	BQQV [1]	BBQE	BBQV	BQBE	GQQE	GQQV	DAQF
			MG13	MG13	MG13	MG13	MG13	MG13	MG13	RMG13	MG13S	MG13S	HJ92N
	125.1	28	96658825	96658827	96658826	96658828	98670804	96658829	97769886	96658830	-	-	96658831
	160.1	28	96658825	96658827	96658826	96658828	98670804	96658829	97769886	96658830	-	-	96658831
	200.1	28	96658825	96658827	96658826	96658828	98670804	96658829	97769886	96658830	-	-	96658831
32 -	125	28	96658825	96658827	96658826	96658828	98670804	96658829	97769886	96658830	-	-	96658831
	160	28	96658825	96658827	96658826	96658828	98670804	96658829	97769886	96658830	-	-	96658831
	200	28	96658825	96658827	96658826	96658828	98670804	96658829	97769886	96658830	-	-	96658831
	250	28	96658825	96658827	96658826	96658828	98670804	96658829	97769886	96658830	-	-	96658831
	125	28	96658825	96658827	96658826	96658828	98670804	96658829	97769886	96658830	-	-	96658831
	160	28	96658825	96658827	96658826	96658828	98670804	96658829	97769886	96658830	-	-	96658831
40 -	200	28	96658825	96658827	96658826	96658828	98670804	96658829	97769886	96658830	-	-	96658831
	250	28	96658825	96658827	96658826	96658828	98670804	96658829	97769886	96658830	-	-	96658831
	315	38	96658836	96658838	96658837	96658839	98670805	96658850	97769888	96658851	-	-	96658852
	125	28	96658825	96658827	96658826	96658828	98670804	96658829	97769886	96658830	-	-	96658831
	160	28	96658825	96658827	96658826	96658828	98670804	96658829	97769886	96658830	-	-	96658831
50 -	200	28	96658825	96658827	96658826	96658828	98670804	96658829	97769886	96658830	-	-	96658831
	250	28	96658825	96658827	96658826	96658828	98670804	96658829	97769886	96658830	-	-	96658831
	315	38	96658836	96658838	96658837	96658839	98670805	96658850	97769888	96658851	-	-	96658852
	125	28	96658825	96658827	96658826	96658828	98670804	96658829	97769886	96658830	-	-	96658831
	160	28	96658825	96658827	96658826	96658828	98670804	96658829	97769886	96658830	-	-	96658831
65 -	200	28	96658825	96658827	96658826	96658828	98670804	96658829	97769886	96658830	-	-	96658831
	250	38	96658836	96658838	96658837	96658839	98670805	96658850	97769888	96658851	-	-	96658852
	315	38	96658836	96658838	96658837	96658839	98670805	96658850	97769888	96658851	-	-	96658852
	160	28	96658825	96658827	96658826	96658828	98670804	96658829	97769886	96658830	-	-	96658831
	200	38	96658836	96658838	96658837	96658839	98670805	96658850	97769888	96658851	-	-	96658852
	250	38	96658836	96658838	96658837	96658839	98670805	96658850	97769888	96658851	-	-	96658852
80 -	315	38	96658836	96658838	96658837	96658839	98670805	96658850	97769888	96658851	-	-	96658852
	315 [2]	48	96658857	96658860	96658858	96658861	98670806	96658862	97769890	-	-	-	96658863
	400	48	96658857	96658860	96658858	96658861	98670806	96658862	97769890	-	-	-	96658863
	160	28	96658825	96658827	96658826	96658828	98670804	96658829	97769886	96658830	-	-	96658831
	200	38	96658836	96658838	96658837	96658839	98670805	96658850	97769888	96658851	-	-	96658852
	250	38	96658836	96658838	96658837	96658839	98670805	96658850	97769888	96658851	-	-	96658852
100 -	250 [2]	48	96658857	96658860	96658858	96658861	98670806	96658862	97769890	-	-	-	96658863
	315	38	96658836	96658838	96658837	96658839	98670805	96658850	97769888	96658851	-	-	96658852
	315 [2]	48	96658857	96658860	96658858	96658861	98670806	96658862	97769890	-	-	-	96658863
	400	48	96658857	96658860	96658858	96658861	98670806	96658862	97769890	-	-	-	96658863
	200	38	96658836	96658838	96658837	96658839	98670805	96658850	97769888	96658851	-	-	96658852
	250	38	96658836	96658838	96658837	96658839	98670805	96658850	97769888	96658851	-	-	96658852
	250 [2]	48	96658857	96658860	96658858	96658861	98670806	96658862	97769890	-	-	-	96658863
125 -	315	48	96658857	96658860	96658858	96658861	98670806	96658862	97769890	-	-	-	96658863
	400	48	96658857	96658860	96658858	96658861	98670806	96658862	97769890	-	-	-	96658863
	500	60	97769920	97769922	97769928	97769930	98670808	97769932	97769894	-	-	-	97536595

Pump type		Shaft seal dia.	BAQE	BAQV	BQQE	BQQV	BQQV [1]	BBQE	BBQV	BQBE	GQQE	GQQV	DAQF
			MG13	MG13	MG13	MG13	MG13	MG13	MG13	RMG13	MG13S	MG13S	HJ92N
150 -	200	38	*96658836*	*96658838*	*96658837*	*96658839*	*98670805*	*96658850*	*97769888*	*96658851*	-	-	*96658852*
	250	48	*96658857*	*96658860*	*96658858*	*96658861*	*98670806*	*96658862*	*97769890*	-	-	-	*96658863*
	315.1	48	*96658857*	*96658860*	*96658858*	*96658861*	*98670806*	*96658862*	*97769890*	-	-	-	*96658863*
	315.2	48	*96658857*	*96658860*	*96658858*	*96658861*	*98670806*	*96658862*	*97769890*	-	-	-	*96658863*
	315	48	*96658857*	*96658860*	*96658858*	*96658861*	*98670806*	*96658862*	*97769890*	-	-	-	*96658863*
	400	48	*96658857*	*96658860*	*96658858*	*96658861*	*98670806*	*96658862*	*97769890*	-	-	-	*96658863*
	400 [2]	55	*97769919*	*97769921*	*97769927*	*97769929*	*98670807*	*97769931*	*97769892*	-	-	-	*97536552*
	500	60	*97769920*	*97769922*	*97769928*	*97769930*	*98670808*	*97769932*	*97769894*	-	-	-	*97536595*
200 -	400	55	-	-	-	-	-	-	-	-	-	-	-
	450	55	-	-	-	-	-	-	-	-	-	-	-
250 -	350	55	-	-	-	-	-	-	-	-	-	-	-
	400	55	-	-	-	-	-	-	-	-	-	-	-
	450	60	-	-	-	-	-	-	-	-	-	-	-
	500	60	-	-	-	-	-	-	-	-	-	-	-

1) PWIS-free shaft seal.

2) Oversize pump.

Pump type		Shaft seal dia.	DQQE	DQQK	DQQV	DQQX	AQQE	AQQK	AQQV	AQQX	AQAE	AQAV
			HJ977GN	HJ977GN	HJ977GN	HJ977GN	M7N	M7N	M7N	M7N	M7N	M7N
32 -	125.1	28	*97769896*	*97769912*	*97769900*	*97769908*	*96658834*	*97769916*	*96658835*	*97769904*	*96658832*	*96658833*
	160.1	28	*97769896*	*97769912*	*97769900*	*97769908*	*96658834*	*97769916*	*96658835*	*97769904*	*96658832*	*96658833*
	200.1	28	*97769896*	*97769912*	*97769900*	*97769908*	*96658834*	*97769916*	*96658835*	*97769904*	*96658832*	*96658833*
	125	28	*97769896*	*97769912*	*97769900*	*97769908*	*96658834*	*97769916*	*96658835*	*97769904*	*96658832*	*96658833*
	160	28	*97769896*	*97769912*	*97769900*	*97769908*	*96658834*	*97769916*	*96658835*	*97769904*	*96658832*	*96658833*
	200	28	*97769896*	*97769912*	*97769900*	*97769908*	*96658834*	*97769916*	*96658835*	*97769904*	*96658832*	*96658833*
	250	28	*97769896*	*97769912*	*97769900*	*97769908*	*96658834*	*97769916*	*96658835*	*97769904*	*96658832*	*96658833*
40 -	125	28	*97769896*	*97769912*	*97769900*	*97769908*	*96658834*	*97769916*	*96658835*	*97769904*	*96658832*	*96658833*
	160	28	*97769896*	*97769912*	*97769900*	*97769908*	*96658834*	*97769916*	*96658835*	*97769904*	*96658832*	*96658833*
	200	28	*97769896*	*97769912*	*97769900*	*97769908*	*96658834*	*97769916*	*96658835*	*97769904*	*96658832*	*96658833*
	250	28	*97769896*	*97769912*	*97769900*	*97769908*	*96658834*	*97769916*	*96658835*	*97769904*	*96658832*	*96658833*
	315	38	*97769898*	*97769914*	*97769902*	*97769910*	*96658855*	*97769918*	*96658856*	*97769906*	*96658853*	*96658854*
50 -	125	28	*97769896*	*97769912*	*97769900*	*97769908*	*96658834*	*97769916*	*96658835*	*97769904*	*96658832*	*96658833*
	160	28	*97769896*	*97769912*	*97769900*	*97769908*	*96658834*	*97769916*	*96658835*	*97769904*	*96658832*	*96658833*
	200	28	*97769896*	*97769912*	*97769900*	*97769908*	*96658834*	*97769916*	*96658835*	*97769904*	*96658832*	*96658833*
	250	28	*97769896*	*97769912*	*97769900*	*97769908*	*96658834*	*97769916*	*96658835*	*97769904*	*96658832*	*96658833*
	315	38	*97769898*	*97769914*	*97769902*	*97769910*	*96658855*	*97769918*	*96658856*	*97769906*	*96658853*	*96658854*
65 -	125	28	*97769896*	*97769912*	*97769900*	*97769908*	*96658834*	*97769916*	*96658835*	*97769904*	*96658832*	*96658833*
	160	28	*97769896*	*97769912*	*97769900*	*97769908*	*96658834*	*97769916*	*96658835*	*97769904*	*96658832*	*96658833*
	200	28	*97769896*	*97769912*	*97769900*	*97769908*	*96658834*	*97769916*	*96658835*	*97769904*	*96658832*	*96658833*
	250	38	*97769898*	*97769914*	*97769902*	*97769910*	*96658855*	*97769918*	*96658856*	*97769906*	*96658853*	*96658854*
	315	38	*97769898*	*97769914*	*97769902*	*97769910*	*96658855*	*97769918*	*96658856*	*97769906*	*96658853*	*96658854*
80 -	160	28	*97769896*	*97769912*	*97769900*	*97769908*	*96658834*	*97769916*	*96658835*	*97769904*	*96658832*	*96658833*
	200	38	*97769898*	*97769914*	*97769902*	*97769910*	*96658855*	*97769918*	*96658856*	*97769906*	*96658853*	*96658854*
	250	38	*97769898*	*97769914*	*97769902*	*97769910*	*96658855*	*97769918*	*96658856*	*97769906*	*96658853*	*96658854*
	315	38	*97769898*	*97769914*	*97769902*	*97769910*	*96658855*	*97769918*	*96658856*	*97769906*	*96658853*	*96658854*
	315 [3]	48	*97685510*	*97685518*	*97685513*	*97685515*	*96658866*	*97685505*	*96658867*	*97685502*	*96658864*	*96658865*
	400	48	*97685510*	*97685518*	*97685513*	*97685515*	*96658866*	*97685505*	*96658867*	*97685502*	*96658864*	*96658865*

Pump type		Shaft seal dia.	DQQE	DQQK	DQQV	DQQX	AQQE	AQQK	AQQV	AQQX	AQAE	AQAV
			HJ977GN	HJ977GN	HJ977GN	HJ977GN	M7N	M7N	M7N	M7N	M7N	M7N
100 -	160	28	*97769896*	*97769912*	*97769900*	*97769908*	*96658834*	*97769916*	*96658835*	*97769904*	*96658832*	*96658833*
	200	38	*97769898*	*97769914*	*97769902*	*97769910*	*96658855*	*97769918*	*96658856*	*97769906*	*96658853*	*96658854*
	250	38	*97769898*	*97769914*	*97769902*	*97769910*	*96658855*	*97769918*	*96658856*	*97769906*	*96658853*	*96658854*
	250 [3)]	48	*97685510*	*97685518*	*97685513*	*97685515*	*96658866*	*97685505*	*96658867*	*97685502*	*96658864*	*96658865*
	315	38	*97769898*	*97769914*	*97769902*	*97769910*	*96658855*	*97769918*	*96658856*	*97769906*	*96658853*	*96658854*
	315 [3)]	48	*97685510*	*97685518*	*97685513*	*97685515*	*96658866*	*97685505*	*96658867*	*97685502*	*96658864*	*96658865*
	400	48	*97685510*	*97685518*	*97685513*	*97685515*	*96658866*	*97685505*	*96658867*	*97685502*	*96658864*	*96658865*
125 -	200	38	*97769898*	*97769914*	*97769902*	*97769910*	*96658855*	*97769918*	*96658856*	*97769906*	*96658853*	*96658854*
	250	38	*97769898*	*97769914*	*97769902*	*97769910*	*96658855*	*97769918*	*96658856*	*97769906*	*96658853*	*96658854*
	250 [3)]	48	*97685510*	*97685518*	*97685513*	*97685515*	*96658866*	*97685505*	*96658867*	*97685502*	*96658864*	*96658865*
	315	48	*97685510*	*97685518*	*97685513*	*97685515*	*96658866*	*97685505*	*96658867*	*97685502*	*96658864*	*96658865*
	400	48	*97685510*	*97685518*	*97685513*	*97685515*	*96658866*	*97685505*	*96658867*	*97685502*	*96658864*	*96658865*
	500	60	*97685599*	*97685611*	*97685603*	*97685607*	*97536585*	*97685591*	*97536586*	*97685587*	*97769924*	*97769926*
150 -	200	38	*97769898*	*97769914*	*97769902*	*97769910*	*96658855*	*97769918*	*96658856*	*97769906*	*96658853*	*96658854*
	250	48	*97685510*	*97685518*	*97685513*	*97685515*	*96658866*	*97685505*	*96658867*	*97685502*	*96658864*	*96658865*
	315.1	48	*97685510*	*97685518*	*97685513*	*97685515*	*96658866*	*97685505*	*96658867*	*97685502*	*96658864*	*96658865*
	315.2	48	*97685510*	*97685518*	*97685513*	*97685515*	*96658866*	*97685505*	*96658867*	*97685502*	*96658864*	*96658865*
	315	48	*97685510*	*97685518*	*97685513*	*97685515*	*96658866*	*97685505*	*96658867*	*97685502*	*96658864*	*96658865*
	400	48	*97685510*	*97685518*	*97685513*	*97685515*	*96658866*	*97685505*	*96658867*	*97685502*	*96658864*	*96658865*
	400 [3)]	55	*97685597*	*97685609*	*97685601*	*97685605*	*97536543*	*97685589*	*97536544*	*97685585*	*97769923*	*97769925*
	500	60	*97685599*	*97685611*	*97685603*	*97685607*	*97536585*	*97685591*	*97536586*	*97685587*	*97769924*	*97769926*
200 -	400	55	-	-	-	-	-	-	-	-	-	-
	450	55	-	-	-	-	-	-	-	-	-	-
250 -	350	55	-	-	-	-	-	-	-	-	-	-
	400	55	-	-	-	-	-	-	-	-	-	-
	450	60	-	-	-	-	-	-	-	-	-	-
	500	60	-	-	-	-	-	-	-	-	-	-

3) Oversize pump.

Spacer ring for shaft seal

(pos. 105b and 105c)

28, 48, 55 and 60 mm	38 mm	
	Design 1	Design 2
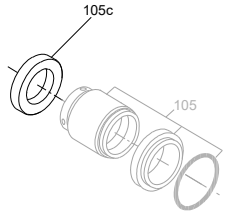	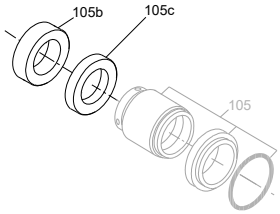	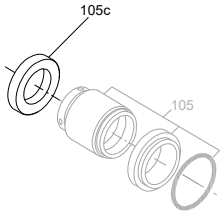
HJ92N, M7N	*HJ92N, M7N, HJ977GN*	*HJ92N, M7N, HJ977GN*
	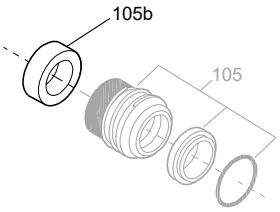	
	MG13 RMG13	

Spacer ring

Pos.	Shaft seal diameter [mm]	Description	Length [mm]	Material code	
				A, B, C, D, E, F, G, H, K, M, N, P, S	I, J, L, R, T, U, W
105b	38	Spacer ring	15.5	*96591277*	*96938601*
105c	28		7.5	*96938597*	*96938598*
	38		10	*96938599*	*96938600*
	48		15	*96938602*	*96938603*
	55		22.5	*96938604*	*96938605*
	60		17.5	*96938606*	*96938607*
105b and 105c	38		15.5	*96930797*	*96930799*
			10		

38 mm spacer ring			
Pump type		Shaft seal dia.	Design
32 -	125.1	28	-
	160.1	28	-
	200.1	28	-
	125	28	-
	160	28	-
	200	28	-
	250	28	-
40 -	125	28	-
	160	28	-
50 -	200	28	-
	250	28	-
	315	38	2
65 -	125	28	-
	160	28	-
80 -	200	28	-
	250	38	1
	315	38	1
100 -	160	28	-
	200	38	1
	250	38/48	1
	315	38/48	1
	400	48	-
125 -	200	38	-
	250	38/48	1
	315	48	-
	400	48	-
	500	60	-
150 -	200	38	1
	250	48	-
	315.1	48	-
	315.2	48	-
	315	48	-
	400	48/55	-
	500	60	-
200 -	400	55	-
	450	55	-
250 -	350	55	-
	400	55	-
	450	60	-
	500	60	-

O-ring

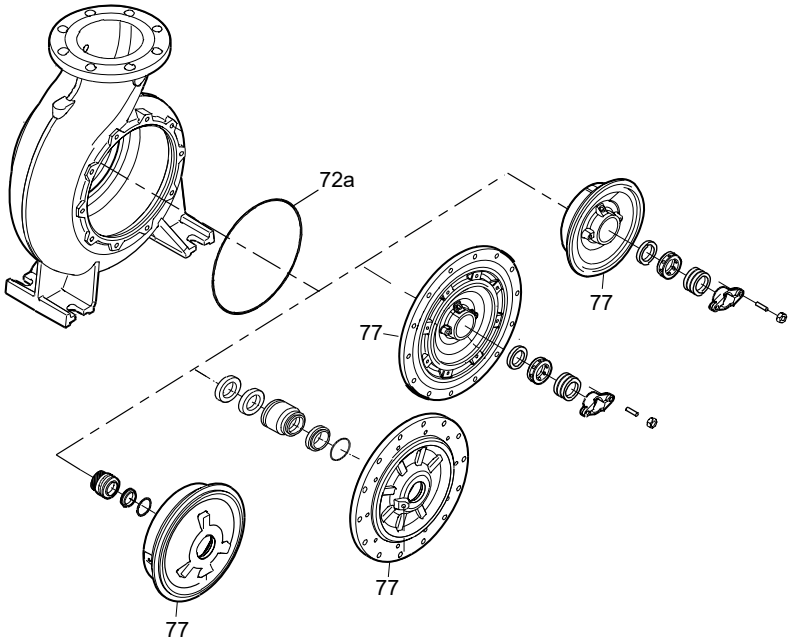

TM047046

O-ring	
Pos.	**Content**
72a	1 x O-ring

NK 32-125.1/142 A1-F-L-BAQE

The O-ring materials can be found in the type designation on the nameplate.

Code	Material
E	EPDM
M	FEPS
K	FFKM
V	FKM
F	FXM
X	HNBR

Pump type		Shaft seal dia.	O-ring kit 1 (Pos. 72a)					
			E (EPDM)	M (FEPS)	K (FFKM)	V (FKM)	F (FXM)	X (HNBR)
32 -	125.1	28	*97757659*	*97904673*	*97904674*	*97757697*	*97790022*	*97904675*
	160.1	28	*97757659*	*97904673*	*97904674*	*97757697*	*97790022*	*97904675*
	200.1	28	*97757671*	*97904679*	*97904691*	*97757698*	*97790080*	*97904692*
	125	28	*97757659*	*97904673*	*97904674*	*97757697*	*97790022*	*97904675*
	160	28	*97757659*	*97904673*	*97904674*	*97757697*	*97790022*	*97904675*
	200	28	*97757671*	*97904679*	*97904691*	*97757698*	*97790080*	*97904692*
	250	28	*97757672*	*97904676*	*97904677*	*97757699*	*97790081*	*97904678*
40 -	125	28	*97757659*	*97904673*	*97904674*	*97757697*	*97790022*	*97904675*
	160	28	*97757659*	*97904673*	*97904674*	*97757697*	*97790022*	*97904675*
	200	28	*97757671*	*97904679*	*97904691*	*97757698*	*97790080*	*97904692*
	250	28	*97757672*	*97904676*	*97904677*	*97757699*	*97790081*	*97904678*
	315	38	*97757675*	*96887770*	*96887761*	*97757705*	*96887764*	*96887767*

Pump type		Shaft seal dia.	O-ring kit 1 (Pos. 72a)					
			E (EPDM)	M (FEPS)	K (FFKM)	V (FKM)	F (FXM)	X (HNBR)
50 -	125	28	97757659	97904673	97904674	97757697	97790022	97904675
	160	28	97757659	97904673	97904674	97757697	97790022	97904675
	200	28	97757671	97904679	97904691	97757698	97790080	97904692
	250	28	97757672	97904676	97904677	97757699	97790081	97904678
	315	38	97757675	96887770	96887761	97757705	96887764	96887767
65 -	125	28	97757659	97904673	97904674	97757697	97790022	97904675
	160	28	97757659	97904673	97904674	97757697	97790022	97904675
	200	28	97757671	97904679	97904691	97757698	97790080	97904692
	250	38	97757673	96887769	96887760	97757703	96887763	96887766
	315	38	97757675	96887770	96887761	97757705	96887764	96887767
80 -	160	28	97757659	97904673	97904674	97757697	97790022	97904675
	200	38	97757671	97904679	97904691	97757698	97790080	97904692
	250	38	97757673	96887769	96887760	97757703	96887763	96887766
	315	38	97757675	96887770	96887761	97757705	96887764	96887767
	315 [1]	48	97757675	96887770	96887761	97757705	96887764	96887767
	400	48	97757676	96887771	96887762	97757707	96887765	96887768
100 -	160	28	97757659	97904673	97904674	97757697	97790022	97904675
	200	38	97757671	97904679	97904691	97757698	97790080	97904692
	250	38	97757673	96887769	96887760	97757703	96887763	96887766
	250 [1]	48	97757673	96887769	96887760	97757703	96887763	96887766
	315	38	97757675	96887770	96887761	97757705	96887764	96887767
	315 [1]	48	97757675	96887770	96887761	97757705	96887764	96887767
	400	48	97757676	96887771	96887762	97757707	96887765	96887768
125 -	200	38	97757671	97904679	97904691	97757698	97790080	97904692
	250	38	97757673	96887769	96887760	97757703	96887763	96887766
	250 [1]	48	97757673	96887769	96887760	97757703	96887763	96887766
	315	48	97757675	96887770	96887761	97757705	96887764	96887767
	400	48	97757676	96887771	96887762	97757707	96887765	96887768
	500	60	97757679	97536641	97536606	97757712	97536608	97536609
150 -	200	38	97757671	97904679	97904691	97757698	97790080	97904692
	250	48	97757673	96887769	96887760	97757703	96887763	96887766
	315.1	48	97757675	96887770	96887761	97757705	96887764	96887767
	315.2	48	97757675	96887770	96887761	97757705	96887764	96887767
	315	48	97757675	96887770	96887761	97757705	96887764	96887767
	400	48	97757676	96887771	96887762	97757707	96887765	96887768
	400 [1]	55	97757676	96887771	96887762	97757707	96887765	96887768
	500	60	97757679	97536641	97536606	97757712	97536608	97536609
200 -	400	48	97757676	-	-	97757707	96887765	-
	450	48	97757677	-	-	97757708	97790102	-
250 -	350	48	97757676	-	-	97757707	96887765	-
	400	48	97757676	-	-	97757707	96887765	-
	450	60	97757677	-	-	97757708	97790102	-
	500	60	97757679	-	-	97757712	97536608	-

1) Oversize pump.

Shaft

Stub shaft	Pump shaft	Motor bush
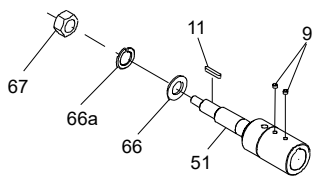 TM044732	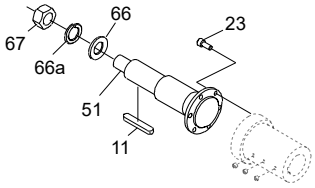 TM044733	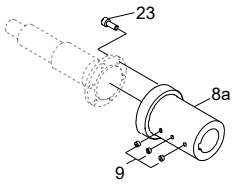 TM044734
67: 1 x nut 66a: 1 x spring washer 66:1 x washer 11:1 x key 9: 2 x fixing screws 51: 1 x shaft (stub shaft)	67: 1 x nut 66a: 1 x spring washer 66: 1 x washer 11:1 x key 23:6/8 x screws 51: 1 x shaft (split shaft)	9: 2/3 x fixing screw 23:6/8 x screws 8a:1 x motor bush

The material code can be found in the type designation on the nameplate.

NB 32 -125 .1 /104 A -F (-A) -BAQE

Pump type		Motor					Stub shaft	Split shaft			Motor bush
		Poles	Power [kW]		Frame size	Make	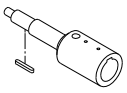	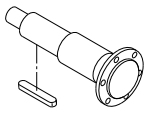			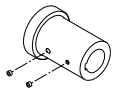
							Material code				
			50 Hz	60 Hz			A, B, C, D, E, F, G, H, S	A, B, C, D, E, F, G, H, S	K, M, N, P	I, J, L, R , T, U, W	
32	125	2	1.1	-	90S	All	96039351	-	96847108	96847110	96810018
32	125	2	1.5	1.5	90S	All	96039351	-	96847108	96847110	96810018
32	125	2	2.2	2.2	90L	All	96039351	-	96847108	96847110	96810018
32	125	2	3.0	3.0	100L	All	96039352	-	96847108	96847110	96810019
32	125	2	-	4.0	112M	All	96039352	-	96847108	96847110	96810019
32	125	2	-	5.5	132S	All	96039353	-	96847108	96847110	96810020
32	125	4	0.25	0.25	71A	All	96039349	-	96847108	96847110	96810016
32	125	4	0.37	0.37	71B	All	96039349	-	96847108	96847110	96810016
32	125	4	-	0.55	80A	All	96039350	-	96847108	96847110	96810017
32	125	4	-	0.75	80B	All	96039350	-	96847108	96847110	96810017
32	160	2	2.2	-	90L	All	96039351	-	96847108	96847110	96810018
32	160	2	3.0	3.0	100L	All	96039352	-	96847108	96847110	96810019
32	160	2	4.0	4.0	112M	All	96039352	-	96847108	96847110	96810019
32	160	2	5.5	5.5	132S	All	96039353	-	96847108	96847110	96810020
32	160	2	-	7.5	132S	All	96039353	-	96847108	96847110	96810020
32	160	2	-	11	160M	All	96039354	-	96847108	96847110	96810021
32	160	4	0.25	-	71A	All	96039349	-	96847108	96847110	96810016
32	160	4	0.37	0.37	71B	All	96039349	-	96847108	96847110	96810016
32	160	4	0.55	0.55	80A	All	96039350	-	96847108	96847110	96810017
32	160	4	0.75	0.75	80B	All	96039350	-	96847108	96847110	96810017
32	160	4	-	1.1	90S	All	96039351	-	96847108	96847110	96810018
32	200	2	4.0	-	112M	All	96039352	-	96847108	96847110	96810019
32	200	2	5.5	5.5	132S	All	96039353	-	96847108	96847110	96810020
32	200	2	7.5	7.5	132S	All	96039353	-	96847108	96847110	96810020
32	200	2	-	15	160M	All	96039354	-	96847108	96847110	96810021
32	200	2	-	18.5	160L	All	96039354	-	96847108	96847110	96810021
32	200	2	11.0	11	160M	All	96039354	-	96847108	96847110	96810021
32	200	4	0.55	-	80A	All	96039350	-	96847108	96847110	96810017

Pump type		Motor					Stub shaft	Split shaft			Motor bush
		Poles	Power [kW]		Frame size	Make	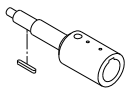	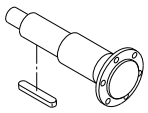			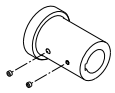
								Material code			
			50 Hz	60 Hz			A, B, C, D, E, F, G, H, S	A, B, C, D, E, F, G, H, S	K, M, N, P	I, J, L, R , T, U, W	
32	200	4	0.75	0.75	80B	All	96039350	-	96847108	96847110	96810017
32	200	4	1.1	1.1	90S	All	96039351	-	96847108	96847110	96810018
32	200	4	1.5	1.5	90L	All	96039351	-	96847108	96847110	96810018
32	200	4	-	2.2	100L	All	96039352	-	96847108	96847110	96810019
32	250	2	5.5	5.5	132S	All	-	96847108	96847108	96847110	96810020
32	250	2	7.5	7.5	132S	All	-	96847108	96847108	96847110	96810020
32	250	2	-	18.5	160L	All	-	96847108	96847108	96847110	96810021
32	250	2	11.0	11	160M	All	-	96847108	96847108	96847110	96810021
32	250	2	15.0	15	160M	All	-	96847108	96847108	96847110	96810021
32	250	4	0.75	-	80B	All	-	96847108	96847108	96847110	96810017
32	250	4	1.1	1.1	90S	All	-	96847108	96847108	96847110	96810018
32	250	4	1.5	1.5	90L	All	-	96847108	96847108	96847110	96810018
32	250	4	2.2	2.2	100L	All	-	96847108	96847108	96847110	96810019
32	125.1	2	0.75	-	80A	All	96039350	-	96847108	96847110	96810017
32	125.1	2	1.1	1.1	90S	All	96039351	-	96847108	96847110	96810018
32	125.1	2	1.5	1.5	90S	All	96039351	-	96847108	96847110	96810018
32	125.1	2	2.2	2.2	90L	All	96039351	-	96847108	96847110	96810018
32	125.1	2	-	3.0	100L	All	96039352	-	96847108	96847110	96810019
32	125.1	2	-	4.0	112M	All	96039352	-	96847108	96847110	96810019
32	125.1	4	0.25	0.25	71A	All	96039349	-	96847108	96847110	96810016
32	125.1	4	0.37	0.37	71B	All	96039349	-	96847108	96847110	96810016
32	125.1	4	-	0.55	80A	All	96039350	-	96847108	96847110	96810017
32	160.1	2	1.5	-	90S	All	96039351	-	96847108	96847110	96810018
32	160.1	2	2.2	2.2	90L	All	96039351	-	96847108	96847110	96810018
32	160.1	2	3.0	3.0	100L	All	96039352	-	96847108	96847110	96810019
32	160.1	2	4.0	4.0	112M	All	96039352	-	96847108	96847110	96810019
32	160.1	2	-	5.5	132S	All	96039353	-	96847108	96847110	96810020
32	160.1	2	-	7.5	132S	All	96039353	-	96847108	96847110	96810020
32	160.1	4	0.25	-	71A	All	96039349	-	96847108	96847110	96810016
32	160.1	4	0.37	0.37	71B	All	96039349	-	96847108	96847110	96810016
32	160.1	4	0.55	0.55	80A	All	96039350	-	96847108	96847110	96810017
32	160.1	4	-	0.75	80B	All	96039350	-	96847108	96847110	96810017
32	200.1	2	3.0	-	100L	All	96039352	-	96847108	96847110	96810019
32	200.1	2	4.0	4.0	112M	All	96039352	-	96847108	96847110	96810019
32	200.1	2	5.5	5.5	132S	All	96039353	-	96847108	96847110	96810020
32	200.1	2	7.5	7.5	132S	All	96039353	-	96847108	96847110	96810020
32	200.1	2	-	11	160M	All	96039354	-	96847108	96847110	96810021
32	200.1	4	0.37	-	71B	All	-	96847108	96847108	96847110	96810016
32	200.1	4	0.55	0.55	80A	All	96039350	-	96847108	96847110	96810017
32	200.1	4	0.75	0.75	80B	All	96039350	-	96847108	96847110	96810017
32	200.1	4	-	1.1	90S	All	96039351	-	96847108	96847110	96810018
32	200.1	4	-	1.5	90L	All	96039351	-	96847108	96847110	96810018
40	125	2	1.5	-	90S	All	96039351	-	96847108	96847110	96810018
40	125	2	2.2	-	90L	All	96039351	-	96847108	96847110	96810018
40	125	2	3.0	3.0	100L	All	96039352	-	96847108	96847110	96810019
40	125	2	4.0	4.0	112M	All	96039352	-	96847108	96847110	96810019
40	125	2	5.5	5.5	132S	All	96039353	-	96847108	96847110	96810020
40	125	2	-	7.5	132S	All	96039353	-	96847108	96847110	96810020

Pump type		Motor					Stub shaft	Split shaft			Motor bush
		Poles	Power [kW]		Frame size	Make	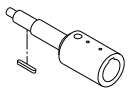	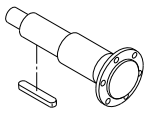			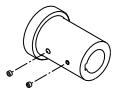
							Material code				
			50 Hz	60 Hz			A, B, C, D, E, F, G, H, S	A, B, C, D, E, F, G, H, S	K, M, N, P	I, J, L, R , T, U, W	
40	125	2	-	11	160M	All	96039354	-	96847108	96847110	96810021
40	125	4	0.25	-	71A	All	96039349	-	96847108	96847110	96810016
40	125	4	0.37	0.37	71B	All	96039349	-	96847108	96847110	96810016
40	125	4	0.55	0.55	80A	All	96039350	-	96847108	96847110	96810017
40	125	4	-	0.75	80B	All	96039350	-	96847108	96847110	96810017
40	125	4	-	1.1	90S	All	96039351	-	96847108	96847110	96810018
40	160	2	4.0	-	112M	All	96039352	-	96847108	96847110	96810019
40	160	2	5.5	5.5	132S	All	96039353	-	96847108	96847110	96810020
40	160	2	7.5	7.5	132S	All	96039353	-	96847108	96847110	96810020
40	160	2	11.0	11	160M	All	96039354	-	96847108	96847110	96810021
40	160	2	-	15	160M	All	96039354	-	96847108	96847110	96810021
40	160	4	0.37	-	71B	All	96039349	-	96847108	96847110	96810016
40	160	4	0.55	0.55	80A	All	96039350	-	96847108	96847110	96810017
40	160	4	0.75	0.75	80B	All	96039350	-	96847108	96847110	96810017
40	160	4	1.1	1.1	90S	All	96039351	-	96847108	96847110	96810018
40	160	4	-	1.5	90L	All	96039351	-	96847108	96847110	96810018
40	160	4	-	2.2	100L	All	96039352	-	96847108	96847110	96810019
40	200	2	5.5	-	132S	All	96039353	-	96847108	96847110	96810020
40	200	2	7.5	-	132S	All	96039353	-	96847108	96847110	96810020
40	200	2	11.0	11	160M	All	96039354	-	96847108	96847110	96810021
40	200	2	15.0	15	160M	All	96039354	-	96847108	96847110	96810021
40	200	2	-	18.5	160L	All	96039354	-	96847108	96847110	96810021
40	200	2	-	22	180M	All	96039355	-	96847108	96847110	96306481
40	200	2	-	30	200L	All	96039356	-	96847108	96847110	96306482
40	200	4	0.75	-	80B	All	96039350	-	96847108	96847110	96810017
40	200	4	1.1	1.1	90S	All	96039351	-	96847108	96847110	96810018
40	200	4	1.5	1.5	90L	All	96039351	-	96847108	96847110	96810018
40	200	4	2.2	2.2	100L	All	96039352	-	96847108	96847110	96810019
40	200	4	-	3.0	100L	All	96039352	-	96847108	96847110	96810019
40	250	2	11.0	-	160M	All	96039354	-	96847108	96847110	96810021
40	250	2	15.0	15	160M	All	96039354	-	96847108	96847110	96810021
40	250	2	18.5	18.5	160L	All	96039354	-	96847108	96847110	96810021
40	250	2	22	22	180M	All	96039355	-	96847108	96847110	96306481
40	250	2	30	30	200L	All	96039356	-	96847108	96847110	96306482
40	250	2	-	37	200L	All	96039356	-	96847108	96847110	96306482
40	250	4	1.5	-	90L	All	96039351	-	96847108	96847110	96810018
40	250	4	2.2	2.2	100L	All	96039352	-	96847108	96847110	96810019
40	250	4	3.0	3.0	100L	All	96039352	-	96847108	96847110	96810019
40	250	4	-	4.0	112M	All	96039352	-	96847108	96847110	96810019
40	250	4	-	5.5	132S	All	96039353	-	96847108	96847110	96810020
40	315	2	22	-	180M	All	96039360	-	96847117	96847118	96306481
40	315	2	30	-	200L	All	96039361	-	96847117	96847118	96306482
40	315	2	37	-	200L	All	96039361	-	96847117	96847118	96306482
40	315	2	45	-	225M	All	96537610	-	96847117	96847118	96810022
40	315	4	3.0	-	100L	All	-	96847117	96847117	96847118	96810019
40	315	4	4.0	-	112M	All	-	96847117	96847117	96847118	96810019
40	315	4	5.5	5.5	132S	All	96039358	-	96847121	96847123	96810020
40	315	4	7.5	7.5	132S	All	96039358	-	96847117	96847118	96810020

Pump type		Motor					Stub shaft	Split shaft		Motor bush
		Poles	Power [kW]		Frame size	Make	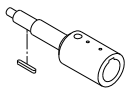	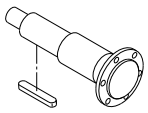		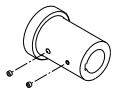
							Material code			
			50 Hz	60 Hz			A, B, C, D, E, F, G, H, S	A, B, C, D, E, F, G, H, S	K, M, N, P	I, J, L, R , T, U, W
40	315	4	-	11	160M	All	96039359	-	96847117	96847118	96810021
50	125	2	3.0	-	100L	All	96039352	-	96847108	96847110	96810019
50	125	2	4.0	4.0	112M	All	96039352	-	96847108	96847110	96810019
50	125	2	5.5	5.5	132S	All	96039353	-	96847108	96847110	96810020
50	125	2	7.5	7.5	132S	All	96039353	-	96847108	96847110	96810020
50	125	2	-	11	160M	All	96039354	-	96847108	96847110	96810021
50	125	2	-	15	160M	All	96039354	-	96847108	96847110	96810021
50	125	4	0.37	-	71B	All	96039349	-	96847108	96847110	96810016
50	125	4	0.55	0.55	80A	All	96039350	-	96847108	96847110	96810017
50	125	4	0.75	0.75	80B	All	96039350	-	96847108	96847110	96810017
50	125	4	1.1	1.1	90S	All	96039351	-	96847108	96847110	96810018
50	125	4	-	1.5	90L	All	96039351	-	96847108	96847110	96810018
50	160	2	5.5	-	132S	All	96039353	-	96847108	96847110	96810020
50	160	2	7.5	7.5	132S	All	96039353	-	96847108	96847110	96810020
50	160	2	11.0	11	160M	All	96039354	-	96847108	96847110	96810021
50	160	2	15.0	15	160M	All	96039354	-	96847108	96847110	96810021
50	160	2	-	18.5	160L	All	96039354	-	96847108	96847110	96810021
50	160	2	-	22	180M	All	-	96847108	96847108	96847110	96306481
50	160	4	0.55	-	80A	All	96039350	-	96847108	96847110	96810017
50	160	4	0.75	-	80B	All	96039350	-	96847108	96847110	96810017
50	160	4	1.1	1.1	90S	All	96039351	-	96847108	96847110	96810018
50	160	4	1.5	1.5	90L	All	96039351	-	96847108	96847110	96810018
50	160	4	2.2	2.2	100L	All	96039352	-	96847108	96847110	96810019
50	160	4	-	3.0	100L	All	96039352	-	96847108	96847110	96810019
50	200	2	11.0	-	160M	All	96039354	-	96847108	96847110	96810021
50	200	2	15.0	15	160M	All	96039354	-	96847108	96847110	96810021
50	200	2	18.5	18.5	160L	All	96039354	-	96847108	96847110	96810021
50	200	2	22	22	180M	All	96039355	-	96847108	96847110	96306481
50	200	2	-	30	200L	All	96039356	-	96847108	96847110	96306482
50	200	2	-	37	200L	All	96039356	-	96847108	96847110	96306482
50	200	4	1.1	-	90S	All	96039351	-	96847108	96847110	96810018
50	200	4	1.5	-	90L	All	96039351	-	96847108	96847110	96810018
50	200	4	2.2	2.2	100L	All	96039352	-	96847108	96847110	96810019
50	200	4	3.0	3.0	100L	All	96039352	-	96847108	96847110	96810019
50	200	4	-	4.0	112M	All	96039352	-	96847108	96847110	96810019
50	200	4	-	5.5	132S	All	96039353	-	96847108	96847110	96810020
50	250	2	15.0	-	160M	All	96039354	-	96847108	96847110	96810021
50	250	2	18.5	-	160L	All	96039354	-	96847108	96847110	96810021
50	250	2	22	-	180M	All	96039355	-	96847108	96847110	96306481
50	250	2	30	30	200L	All	96039356	-	96847108	96847110	96306482
50	250	2	37	37	200L	All	96039356	-	96847108	96847110	96306482
50	250	4	2.2	-	100L	All	96039352	-	96847108	96847110	96810019
50	250	4	3.0	-	100L	All	96039352	-	96847108	96847110	96810019
50	250	4	4.0	4.0	112M	All	96039352	-	96847108	96847110	96810019
50	250	4	-	5.5	132S	All	96039353	-	96847108	96847110	96810020
50	250	4	-	7.5	132M	All	96039353	-	96847108	96847110	96810020
50	315	2	30	-	200L	All	96039361	-	96847113	96847114	96306482
50	315	2	37	-	200L	All	96039361	-	96847113	96847114	96306482

Pump type		Motor					Stub shaft	Split shaft			Motor bush
		Poles	Power [kW]		Frame size	Make	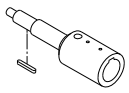	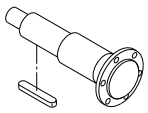			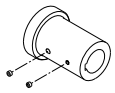
							Material code				
			50 Hz	60 Hz			A, B, C, D, E, F, G, H, S	A, B, C, D, E, F, G, H, S	K, M, N, P	I, J, L, R , T, U, W	
50	315	2	45	-	225M	All	96537610	-	96847117	96847118	96810022
50	315	2	55	-	250M	All	-	96847121	96847121	96847123	96306483
50	315	4	4.0	-	112M	All	-	96847117	96847117	96847118	96810019
50	315	4	5.5	5.5	132S	All	96039358	-	96847117	96847118	96810020
50	315	4	7.5	7.5	132M	All	96039358	-	96847117	96847118	96810020
50	315	4	11.0	11	160M	All	96039359	-	96847117	96847118	96810021
50	315	4	-	15	160L	All	96039359	-	96847117	96847118	96810021
65	125	2	4.0	-	112M	All	96039352	-	96847108	96847110	96810019
65	125	2	5.5	-	132S	All	96039353	-	96847108	96847110	96810020
65	125	2	7.5	7.5	132S	All	96039353	-	96847108	96847110	96810020
65	125	2	11.0	11	160M	All	96039354	-	96847108	96847110	96810021
65	125	2	-	15	160M	All	96039354	-	96847108	96847110	96810021
65	125	2	-	18.5	160L	All	96039354	-	96847108	96847110	96810021
65	125	4	0.55	-	80A	All	96039350	-	96847108	96847110	96810017
65	125	4	0.75	-	80B	All	96039350	-	96847108	96847110	96810017
65	125	4	1.1	1.1	90S	All	96039351	-	96847108	96847110	96810018
65	125	4	-	1.5	90L	All	96039351	-	96847108	96847110	96810018
65	125	4	-	2.2	100L	All	96039352	-	96847108	96847110	96810019
65	160	2	7.5	-	132S	All	-	96847108	96847108	96847110	96810020
65	160	2	11.0	11	160M	All	96039354	-	96847108	96847110	96810021
65	160	2	15.0	15	160M	All	96039354	-	96847108	96847110	96810021
65	160	2	18.5	18.5	160L	All	96039354	-	96847108	96847110	96810021
65	160	2	-	22	180M	All	96039355	-	96847108	96847110	96306481
65	160	2	-	30	200L	All	96039356	-	96847108	96847110	96306482
65	160	4	0.75	-	80B	All	-	96847108	96847108	96847110	96810017
65	160	4	1.1	-	90S	All	96039351	-	96847108	96847110	96810018
65	160	4	1.5	1.5	90L	All	96039351	-	96847108	96847110	96810018
65	160	4	2.2	2.2	100L	All	96039352	-	96847108	96847110	96810019
65	160	4	-	3.0	100L	All	96039352	-	96847108	96847110	96810019
65	160	4	-	4.0	112M	All	96039352	-	96847108	96847110	96810019
65	200	2	11.0	-	160M	All	96039354	-	96847108	96847110	96810021
65	200	2	15.0	-	160M	All	96039354	-	96847108	96847110	96810021
65	200	2	18.5	18.5	160L	All	96039354	-	96847108	96847110	96810021
65	200	2	22	22	180M	All	96039355	-	96847108	96847110	96306481
65	200	2	30	30	200L	All	96039356	-	96847108	96847110	96306482
65	200	2	37	37	200L	All	96039356	-	96847108	96847110	96306482
65	200	4	1.5	-	90L	All	-	96847108	96847108	96847110	96810018
65	200	4	2.2	-	100L	All	96039352	-	96847108	96847110	96810019
65	200	4	3.0	3.0	100L	All	96039352	-	96847108	96847110	96810019
65	200	4	4.0	4.0	112M	All	96039352	-	96847108	96847110	96810019
65	200	4	-	5.5	132S	All	96039353	-	96847108	96847110	96810020
65	200	4	-	7.5	132M	All	96039353	-	96847108	96847110	96810020
65	250	2	30	-	200L	All	96039361	-	96847117	96847118	96306482
65	250	2	37	-	200L	All	96039361	-	96847117	96847118	96306482
65	250	2	45	45	225M	All	96537610	-	96847117	96847118	96810022
65	250	2	55	55	250M	All	-	96847121	96847121	96847123	96306483
65	250	2	75	75	280S	All	-	96847121	96847121	96847123	96306484
65	250	2	-	90	280M	All	-	96847121	96847121	96847123	96306484

Pump type		Motor					Stub shaft	Split shaft			Motor bush
		Poles	Power [kW]		Frame size	Make	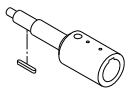	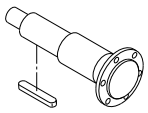			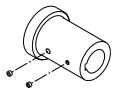
							Material code				
			50 Hz	60 Hz			A, B, C, D, E, F, G, H, S	A, B, C, D, E, F, G, H, S	K, M, N, P	I, J, L, R , T, U, W	
65	250	2	-	110	315S	All	-	96847121	96847121	96847123	96306484
65	250	4	3.0	-	100L	All	96039357	-	96847117	96847118	96810019
65	250	4	4.0	-	112M	All	96039357	-	96847117	96847118	96810019
65	250	4	5.5	5.5	132S	All	96039358	-	96847117	96847118	96810020
65	250	4	7.5	7.5	132M	All	96039358	-	96847117	96847118	96810020
65	250	4	-	11	160M	All	96039359	-	96847117	96847118	96810021
65	250	4	-	15	160L	All	96039359	-	96847117	96847118	96810021
65	315	2	55	-	250M	All	-	96847121	96847121	96847123	96306483
65	315	2	75	-	280S	All	-	96847121	96847121	96847123	96306484
65	315	2	90	-	280M	All	-	96847121	96847121	96847123	96306484
65	315	2	110	-	315S	All	-	96847121	96847121	96847123	96306484
65	315	4	5.5	-	132S	All	96039358	-	96847117	96847118	96810020
65	315	4	7.5	7.5	132M	All	96039358	-	96847117	96847118	96810020
65	315	4	-	18.5	180M	All	96039360	-	96847117	96847118	96306481
65	315	4	-	22	180L	All	96039360	-	96847117	96847118	96306481
65	315	4	11.0	11	160M	All	96039359	-	96847117	96847118	96810021
65	315	4	15.0	15	160L	All	96039359	-	96847117	96847118	96810021
80	160	2	11.0	-	160M	All	96039354	-	96847108	96847110	96810021
80	160	2	15.0	-	160M	All	96039354	-	96847108	96847110	96810021
80	160	2	18.5	-	160L	All	96039354	-	96847108	96847110	96810021
80	160	2	22	22	180M	All	96039355	-	96847108	96847110	96306481
80	160	2	30	30	200L	All	96039356	-	96847108	96847110	96306482
80	160	2	-	37	200L	All	96039356	-	96847108	96847110	96306482
80	160	4	1.5	-	90L	All	96039351	-	96847108	96847110	96810018
80	160	4	2.2	-	100L	All	96039352	-	96847108	96847110	96810019
80	160	4	3.0	3.0	100L	All	96039352	-	96847108	96847110	96810019
80	160	4	4.0	4.0	112M	All	96039352	-	96847108	96847110	96810019
80	160	4	-	5.5	132S	All	-	96847108	96847108	96847110	96810020
80	200	2	22	-	180M	All	96039360	-	96847117	96847118	96306481
80	200	2	30	-	200L	All	96039361	-	96847117	96847118	96306482
80	200	2	37	37	200L	All	96039361	-	96847117	96847118	96306482
80	200	2	45	45	225M	All	96537610	-	96847117	96847118	96810022
80	200	2	55	55	250M	All	-	96847121	96847121	96847123	96306483
80	200	2	-	75	280S	All	-	96847121	96847121	96847123	96306484
80	200	2	-	90	280M	All	-	96847121	96847121	96847123	96306484
80	200	4	2.2	-	100L	All	-	96847117	96847117	96847118	96810019
80	200	4	3.0	-	100L	All	-	96847117	96847117	96847118	96810019
80	200	4	4.0	4.0	112M	All	-	96847117	96847117	96847118	96810019
80	200	4	5.5	5.5	132S	All	96039358	-	96847117	96847118	96810020
80	200	4	7.5	7.5	132M	All	96039358	-	96847117	96847118	96810020
80	200	4	-	11	160M	All	96039359	-	96847117	96847118	96810021
80	250	2	45	-	225M	All	96537610	-	96847117	96847118	96810022
80	250	2	55	-	250M	All	-	96847121	96847121	96847123	96306483
80	250	2	75	75	280S	All	-	96847121	96847121	96847123	96306484
80	250	2	90	90	280M	All	-	96847121	96847121	96847123	96306484
80	250	2	-	110	315S	All	-	96847121	96847121	96847123	96306484
80	250	2	-	132	315M	All	-	96847121	96847121	96847123	96306484
80	250	2	-	160	315L	All	-	96847121	96847121	96847123	96306484

Pump type		Motor					Stub shaft	Split shaft			Motor bush
		Poles	Power [kW]		Frame size	Make	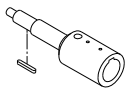	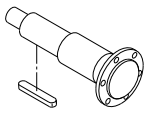			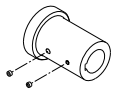
							Material code				
			50 Hz	60 Hz			A, B, C, D, E, F, G, H, S	A, B, C, D, E, F, G, H, S	K, M, N, P	I, J, L, R , T, U, W	
80	250	4	5.5	-	132S	All	96039358	-	96847117	96847118	96810020
80	250	4	7.5	7.5	132M	All	96039358	-	96847117	96847118	96810020
80	250	4	11.0	11	160M	All	96039359	-	96847117	96847118	96810021
80	250	4	-	15	160L	All	96039359	-	96847117	96847118	96810021
80	250	4	-	18.5	180M	All	96039360	-	96847117	96847118	96306481
80	315	2	90	-	280M	All	-	96847121	96847121	96847123	96306484
80	315	2	110	-	315S	All	-	96847121	96847121	96847123	96306484
80	315	2	132	-	315M	All	-	96847121	96847121	96847123	96306484
80	315	4	18.5	18.5	180M	All	96039360	-	96847117	96847118	96306481
80	315	4	22	22	180L	All	96039360	-	96847117	96847118	96306481
80	315	4	-	30	200L	All	96039361	-	96847117	96847118	96306482
80	315	4	-	37	225S	All	96537609	-	96847121	96847123	96306483
80	315	4	-	45	225M	All	96537609	-	96847121	96847123	96306483
80	315	4	11.0	-	160M	All	96039359	-	96847117	96847118	96810021
80	315	4	15.0	-	160L	All	96039359	-	96847117	96847118	96810021
80	400	4	18.5	-	180M	All	-	96306478	96306478	96847124	96306481
80	400	4	22	-	180L	All	-	96306478	96306478	96847124	96306481
80	400	4	30	30	200L	All	-	96306478	96306478	96847124	96306482
80	400	4	37	37	225S	All	-	96306479	96306479	96847125	96306483
80	400	4	45	45	225M	All	-	96306479	96306479	96847125	96306483
80	400	4	-	55	250M	Siemens, MMG-E	-	96306479	96306479	96847125	96306484
80	400	4	-	55	250SC	MMG-G, EFF1 & EFF2	-	96306479	96306479	96847125	96810023
80	400	4	-	75	280S	Siemens, MMG-E	-	96306479	96306479	96847125	96306485
80	400	4	-	75	250MC	MMG-G, EFF1 & EFF2	-	96306479	96306479	96847125	96810023
80	400	4	-	90	280M	Siemens, MMG-E	-	96306479	96306479	96847125	96306485
80	400	4	-	90	280S	MMG-G, EFF1 & EFF2	-	96306479	96306479	96847125	96306486
80	315 *	2	160	-	315L	All	-	96306479	96306479	96847125	96306484
100	160	2	22	-	180M	All	-	96847108	96847108	96847110	96306481
100	160	2	30	-	200L	All	-	96847108	96847108	96847110	96306482
100	160	2	37	37	200L	All	-	96847108	96847108	96847110	96306482
100	160	4	2.2	-	100L	All	-	96847108	96847108	96847110	96810019
100	160	4	3.0	-	100L	All	-	96847108	96847108	96847110	96810019
100	160	4	4.0	4.0	112M	All	-	96847108	96847108	96847110	96810019
100	160	4	-	5.5	132S	All	-	96847108	96847108	96847110	96810020
100	160	4	-	7.5	132M	All	-	96847108	96847108	96847110	96810020
100	160	6	0.55	-	80B	All	-	96847108	96847108	96847110	96810017
100	160	6	0.75	-	90S	All	-	96847108	96847108	96847110	96810018
100	160	6	1.1	1.1	90L	All	-	96847108	96847108	96847110	96810018
100	160	6	-	1.5	100L	All	-	96847108	96847108	96847110	96810019
100	160	6	-	2.2	112M	All	-	96847108	96847108	96847110	96810019
100	200	2	30	-	200L	All	96039361	-	96847113	96847114	96306482
100	200	2	37	-	200L	All	96039361	-	96847113	96847114	96306482
100	200	2	45	-	225M	All	96537610	-	96847117	96847118	96810022
100	200	2	55	55	250M	All	-	96847121	96847121	96847123	96306483
100	200	2	75	75	280S	All	-	96847121	96847121	96847123	96306484
100	200	2	-	90	280M	All	-	96847121	96847121	96847123	96306484
100	200	2	-	110	315S	All	-	96847121	96847121	96847123	96306484
100	200	2	-	132	315M	All	-	96847121	96847121	96847123	96306484

Pump type		Motor					Stub shaft	Split shaft		Motor bush
		Poles	Power [kW]		Frame size	Make	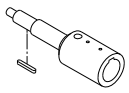	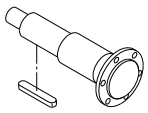		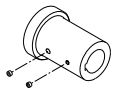
							Material code			
			50 Hz	60 Hz			A, B, C, D, E, F, G, H, S	A, B, C, D, E, F, G, H, S	K, M, N, P	I, J, L, R , T, U, W
100	200	4	4.0	-	112M	All	-	96847117	96847117	96847118	96810019
100	200	4	5.5	5.5	132S	All	96039358	-	96847117	96847118	96810020
100	200	4	7.5	7.5	132M	All	96039358	-	96847117	96847118	96810020
100	200	4	11.0	11	160M	All	96039359	-	96847117	96847118	96810021
100	200	4	-	15	160L	All	96039359	-	96847117	96847118	96810021
100	200	4	-	18.5	180M	All	96039360	-	96847117	96847118	96306481
100	200	6	1.1	-	90L	All	-	96847117	96847117	96847118	96810018
100	200	6	1.5	1.5	100L	All	-	96847117	96847117	96847118	96810019
100	200	6	2.2	2.2	112M	All	-	96847117	96847117	96847118	96810019
100	200	6	3.0	3.0	132SA	All	96039358	-	96847117	96847118	96810020
100	200	6	-	4.0	132MA	All	96039358	-	96847117	96847118	96810020
100	200	6	-	5.5	132MB	All	96039358	-	96847117	96847118	96810020
100	250	2	55	-	250M	All	-	96847121	96847121	96847123	96306483
100	250	2	75	-	280S	All	-	96306479	96306479	96847125	96306484
100	250	2	90	-	280M	All	-	96306479	96306479	96847125	96306484
100	250	2	110	110	315S	All	-	96306479	96306479	96847125	96306484
100	250	2	132	132	315M	All	-	96306479	96306479	96847125	96306484
100	250	2	-	160	315L	All	-	96306479	96306479	96847125	96306484
100	250	4	7.5	-	132M	All	96039358	-	96847117	96847118	96810020
100	250	4	11.0	-	160M	All	96039359	-	96847117	96847118	96810021
100	250	4	15.0	15	160L	All	96039359	-	96847117	96847118	96810021
100	250	4	18.5	18.5	180M	All	96039360	-	96847117	96847118	96306481
100	250	4	-	22	180L	All	96039360	-	96847117	96847118	96306481
100	250	4	-	30	200L	All	96039361	-	96847113	96847114	96306482
100	250	6	2.2	-	112M	All	-	96847117	96847117	96847118	96810019
100	250	6	3.0	-	132SA	All	96039358	-	96847117	96847118	96810020
100	250	6	4.0	4.0	132MA	All	96039358	-	96847117	96847118	96810020
100	250	6	5.5	5.5	132MB	All	96039358	-	96847117	96847118	96810020
100	250	6	-	7.5	160M	All	96039359	-	96847117	96847118	96810021
100	250	6	-	11	160L	All	96039359	-	96847117	96847118	96810021
100	315	2	110	-	315S	All	-	96847121	96847121	96847123	96306484
100	315	2	132	-	315M	All	-	96847121	96847121	96847123	96306484
100	315	4	15.0	-	160L	All	96039359	-	96847117	96847118	96810021
100	315	4	18.5	-	180M	All	96039360	-	96847117	96847118	96306481
100	315	4	22	22	180L	All	96039360	-	96847117	96847118	96306481
100	315	4	30	30	200L	All	96039361	-	96847113	96847114	96306482
100	315	4	-	37	225S	All	96537609	-	96847121	96847123	96306483
100	315	4	-	45	225M	All	96537609	-	96847121	96847123	96306483
100	315	4	-	55	250M	Siemens, MMG-E	-	96847121	96847121	96847123	96306484
100	315	4	-	55	250SC	MMG-G, EFF1 & EFF2	-	96847121	96847121	96847123	96810023
100	315	6	4.0	-	132MA	All	96039358	-	96847117	96847118	96810020
100	315	6	5.5	-	132MB	All	96039358	-	96847117	96847118	96810020
100	315	6	7.5	7.5	160M	All	96039359	-	96847117	96847118	96810021
100	315	6	11.0	11	160L	All	96039359	-	96847117	96847118	96810021
100	315	6	-	15	180L	All	96039360	-	96847117	96847118	96306481
100	400	4	22	-	180L	All	-	96306478	96306478	96847124	96306481
100	400	4	30	-	200L	All	-	96306478	96306478	96847124	96306482
100	400	4	37	37	225S	All	-	96306479	96306479	96847125	96306483

Pump type		Motor					Stub shaft	Split shaft		Motor bush
		Poles	Power [kW]		Frame size	Make	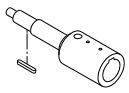	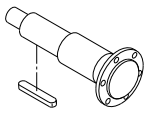		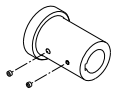
							Material code			
			50 Hz	60 Hz			A, B, C, D, E, F, G, H, S	A, B, C, D, E, F, G, H, S	K, M, N, P	I, J, L, R , T, U, W
100	400	4	45	45	225M	All	-	96306479	96306479	96847125	96306483
100	400	4	55	55	250M	Siemens, MMG-E	-	96306479	96306479	96847125	96306484
100	400	4	55	55	250SC	MMG-G, EFF1 & EFF2	-	96306479	96306479	96847125	96810023
100	400	4	-	75	280S	Siemens, MMG-E	-	96306479	96306479	96847125	96306485
100	400	4	-	75	250MC	MMG-G, EFF1 & EFF2	-	96306479	96306479	96847125	96810023
100	400	4	-	90	280M	Siemens, MMG-E	-	96306479	96306479	96847125	96306485
100	400	4	-	90	280S	MMG-G, EFF1 & EFF2	-	96306479	96306479	96847125	96306486
100	400	6	7.5	-	160M	All	-	96306478	96306478	96847124	96810021
100	400	6	11.0	11	160L	All	-	96306478	96306478	96847124	96810021
100	400	6	15.0	15	180L	All	-	96306478	96306478	96847124	96306481
100	400	6	18.5	18.5	200LA	All	-	96306478	96306478	96847124	96306482
100	400	6	-	22	200LB	All	-	96306478	96306478	96847124	96306482
100	400	6	-	30	225M	All	-	96306479	96306479	96847125	96306483
100	250 *	2	-	200	315L	All	-	96306479	96306479	96847125	96306484
100	315 *	2	160	-	315L	All	-	96306479	96306479	96847125	96306484
100	315 *	2	200	-	315L	All	-	96306479	96306479	96847125	96306484
125	200	2	45	-	225M	All	96537610	-	96847117	96847118	96810022
125	200	2	55	-	250M	All	-	96847121	96847121	96847123	96306483
125	200	2	75	75	280S	All	-	96847121	96847121	96847123	96306484
125	200	2	90	90	280M	All	-	96847121	96847121	96847123	96306484
125	200	2	110	110	315S	All	-	96847121	96847121	96847123	96306484
125	200	2	-	132	315M	All	-	96847121	96847121	96847123	96306484
125	200	2	-	160	315L	All	-	96847121	96847121	96847123	96306484
125	200	2	-	200	315L	All	-	96847121	96847121	96847123	96306484
125	200	4	5.5	-	132S	All	96039358	-	96847117	96847118	96810020
125	200	4	7.5	-	132M	All	96039358	-	96847117	96847118	96810020
125	200	4	11.0	11	160M	All	96039359	-	96847117	96847118	96810021
125	200	4	15.0	15	160L	All	96039359	-	96847117	96847118	96810021
125	200	4	-	18.5	180M	All	96039360	-	96847117	96847118	96306481
125	200	4	-	22	180L	All	96039360	-	96847117	96847118	96306481
125	200	6	1.5	-	100L	All	-	96847117	96847117	96847118	96810019
125	200	6	2.2	-	112M	All	-	96847117	96847117	96847118	96810019
125	200	6	3.0	3.0	132SA	All	96039358	-	96847117	96847118	96810020
125	200	6	4.0	4.0	132MA	All	96039358	-	96847117	96847118	96810020
125	200	6	-	5.5	132MB	All	96039358	-	96847117	96847118	96810020
125	200	6	-	7.5	160M	All	96039359	-	96847117	96847118	96810021
125	250	4	18.5	18.5	180M	All	96039360	-	96847117	96847118	96306481
125	250	4	22	22	180L	All	96039360	-	96847117	96847118	96306481
125	250	4	30	30	200L	All	96039361	-	96847113	96847114	96306482
125	250	4	-	37	225S	All	96537609	-	96847121	96847123	96306483
125	250	4	-	45	225M	All	96537609	-	96847121	96847123	96306483
125	250	4	11.0	-	160M	All	96039359	-	96847117	96847118	96810021
125	250	4	15.0	-	160L	All	96039359	-	96847117	96847118	96810021
125	250	6	3.0	-	132SA	All	96039358	-	96847117	96847118	96810020
125	250	6	4.0	-	132MA	All	96039358	-	96847117	96847118	96810020
125	250	6	5.5	5.5	132MB	All	96039358	-	96847117	96847118	96810020
125	250	6	7.5	7.5	160M	All	96039359	-	96847117	96847118	96810021
125	250	6	-	11	160L	All	96039359	-	96847117	96847118	96810021

Pump type		Motor					Stub shaft	Split shaft		Motor bush
		Poles	Power [kW]		Frame size	Make	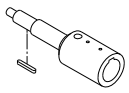	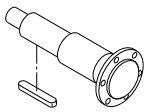		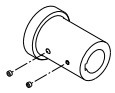
							Material code			
			50 Hz	60 Hz			A, B, C, D, E, F, G, H, S	A, B, C, D, E, F, G, H, S	K, M, N, P	I, J, L, R , T, U, W
125	250	6	-	15	180L	All	96039360	-	96847117	96847118	96306481
125	315	2	132	-	315M	All	-	96306479	96306479	96847125	96306484
125	315	2	160	-	315L	All	-	96306479	96306479	96847125	96306484
125	315	2	200	-	315L	All	-	96306479	96306479	96847125	96306484
125	315	4	18.5	-	180M	All	-	96306478	96306478	96847124	96306481
125	315	4	22	-	180L	All	-	96306478	96306478	96847124	96306481
125	315	4	30	30	200L	All	-	96306478	96306478	96847124	96306482
125	315	4	37	37	225S	All	-	96306479	96306479	96847125	96306483
125	315	4	45	45	225M	All	-	96306479	96306479	96847125	96306483
125	315	4	-	55	250M	Siemens, MMG-E	-	96306479	96306479	96847125	96306484
125	315	4	-	55	250SC	MMG-G, EFF1 & EFF2	-	96306479	96306479	96847125	96810023
125	315	4	-	75	280S	Siemens, MMG-E	-	96306479	96306479	96847125	96306485
125	315	4	-	75	250MC	MMG-G, EFF1 & EFF2	-	96306479	96306479	96847125	96810023
125	315	6	5.5	-	132MB	All	-	96306478	96306478	96847124	96810020
125	315	6	7.5	7.5	160M	All	-	96306478	96306478	96847124	96810021
125	315	6	-	18.5	200LA	All	-	96306478	96306478	96847124	96306482
125	315	6	-	22	200LB	All	-	96306478	96306478	96847124	96306482
125	315	6	11.0	11	160L	All	-	96306478	96306478	96847124	96810021
125	315	6	15.0	15	180L	All	-	96306478	96306478	96847124	96306481
125	400	4	37	-	225S	All	-	96306479	96306479	96847125	96306483
125	400	4	45	-	225M	All	-	96306479	96306479	96847125	96306483
125	400	4	55	55	250M	Siemens, MMG-E	-	96306479	96306479	96847125	96306484
125	400	4	55	55	250SC	MMG-G, EFF1 & EFF2	-	96306479	96306479	96847125	96810023
125	400	4	75	75	280S	Siemens, MMG-E	-	96306479	96306479	96847125	96306485
125	400	4	75	75	250MC	MMG-G, EFF1 & EFF2	-	96306479	96306479	96847125	96810023
125	400	4	90	90	280M	Siemens, MMG-E	-	96306479	96306479	96847125	96306485
125	400	4	90	90	280S	MMG-G, EFF1 & EFF2	-	96306479	96306479	96847125	96306486
125	400	4	-	110	315S	Siemens, MMG-E	-	96306479	96306479	96847125	96306486
125	400	4	-	110	280M	MMG-G, EFF1 & EFF2	-	96306479	96306479	96847125	96306486
125	400	4	-	132	315M	Siemens, MMG-E	-	96306479	96306479	96847125	96306486
125	400	4	-	132	315S	MMG-G, EFF1 & EFF2	-	96306479	96306479	96847125	96306487
125	400	6	18.5	18.5	200LA	Siemens	-	96306478	96306478	96847124	96306482
125	400	6	22	22	200LB	Siemens	-	96306478	96306478	96847124	96306482
125	400	6	30	30	225M	Siemens	-	96306479	96306479	96847125	96306483
125	400	6	-	37	250M	Siemens	-	96306479	96306479	96847125	96306484
125	400	6	-	37	250S	MMG-G, EFF1 & EFF2	-	96306479	96306479	96847125	96810023
125	400	6	-	45	280S	Siemens, MMG-E	-	96306479	96306479	96847125	96306485
125	400	6	-	45	250M	MMG-G, EFF1 & EFF2	-	96306479	96306479	96847125	96810023
125	400	6	11.0	-	160L	All	-	96306478	96306478	96847124	96810021
125	400	6	15.0	-	180L	All	-	96306478	96306478	96847124	96306481
125	500	4	55	-	250M	Siemens, MMG-E	-	96847130	96847130	96847131	96306484
125	500	4	55	-	250SC	MMG-G, EFF1 & EFF2	-	96847130	96847130	96847131	96810023
125	500	4	75	-	280S	Siemens, MMG-E	-	96847130	96847130	96847131	96306485
125	500	4	75	-	250MC	MMG-G, EFF1 & EFF2	-	96847130	96847130	96847131	96810023
125	500	4	90	-	280M	Siemens, MMG-E	-	96847130	96847130	96847131	96306485
125	500	4	90	-	280S	MMG-G, EFF1 & EFF2	-	96847130	96847130	96847131	96306486
125	500	4	110	110	315S	Siemens, MMG-E	-	96847130	96847130	96847131	96306486
125	500	4	110	110	280M	MMG-G, EFF1 & EFF2	-	96847130	96847130	96847131	96306486

Pump type		Motor					Stub shaft	Split shaft			Motor bush
		Poles	Power [kW]		Frame size	Make	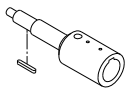	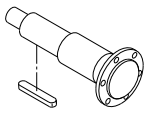			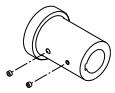
							Material code				
			50 Hz	60 Hz			A, B, C, D, E, F, G, H, S	A, B, C, D, E, F, G, H, S	K, M, N, P	I, J, L, R , T, U, W	
125	500	4	132	132	315M	Siemens, MMG-E	-	96847130	96847130	96847131	96306486
125	500	4	132	132	315S	MMG-G, EFF1 & EFF2	-	96847130	96847130	96847131	96306487
125	500	4	160	160	315M	Siemens, MMG-E	-	96847130	96847130	96847131	96306486
125	500	4	160	160	315M	MMG-G, EFF1 & EFF2	-	96847130	96847130	96847131	96306487
125	500	4	-	200	315L	Siemens, MMG-E	-	96847130	96847130	96847131	96306486
125	500	4	-	200	315M	MMG-G, EFF1 & EFF2	-	96847130	96847130	96847131	96306487
125	500	6	18.5	-	200LA	Siemens	-	96847128	96847128	96847129	96306482
125	500	6	22	-	200LB	Siemens	-	96847128	96847128	96847129	96306482
125	500	6	30	-	225M	Siemens	-	96847130	96847130	96847131	96306483
125	500	6	37	37	250M	Siemens, MMG-E	-	96847130	96847130	96847131	96306484
125	500	6	37	37	250S	MMG-G, EFF1 & EFF2	-	96847130	96847130	96847131	96810023
125	500	6	45	45	280S	Siemens, MMG-E	-	96847130	96847130	96847131	96306485
125	500	6	45	45	250M	MMG-G, EFF1 & EFF2	-	96847130	96847130	96847131	96810023
125	500	6	55	55	280M	Siemens, MMG-E	-	96847130	96847130	96847131	96306485
125	500	6	55	55	280S	MMG-G, EFF1 & EFF2	-	96847130	96847130	96847131	96306486
125	500	6	-	75	315S	Siemens, MMG-E	-	96847130	96847130	96847131	96306486
125	500	6	-	75	280M	MMG-G, EFF1 & EFF2	-	96847130	96847130	96847131	96306486
125	500	6	-	90	315M	Siemens, MMG-E	-	96847130	96847130	96847131	96306486
125	500	6	-	90	315S	MMG-G, EFF1 & EFF2	-	96847130	96847130	96847131	96306487
125	250*	2	90	-	280M	All	-	96306479	96306479	96847125	96306484
125	250*	2	110	-	315S	All	-	96306479	96306479	96847125	96306484
125	250*	2	132	-	315M	All	-	96306479	96306479	96847125	96306484
125	250*	2	160	160	315L	All	-	96306479	96306479	96847125	96306484
125	250*	2	200	200	315L	All	-	96306479	96306479	96847125	96306484
150	200	2	75	-	280S	All	-	96847121	96847121	96847123	96306484
150	200	2	90	-	280M	All	-	96847121	96847121	96847123	96306484
150	200	2	110	110	315S	All	-	96847121	96847121	96847123	96306484
150	200	2	-	132	315M	All	-	96847121	96847121	96847123	96306484
150	200	2	-	160	315L	All	-	96847121	96847121	96847123	96306484
150	200	2	-	200	315L	All	-	96847121	96847121	96847123	96306484
150	200	4	7.5	-	132M	All	96039358	-	96847117	96847118	96810020
150	200	4	11.0	-	160M	All	96039359	-	96847117	96847118	96810021
150	200	4	15.0	15	160L	All	96039359	-	96847117	96847118	96810021
150	200	4	-	18.5	180M	All	96039360	-	96847117	96847118	96306481
150	200	4	-	22	180L	All	96039360	-	96847117	96847118	96306481
150	200	6	2.2	-	112M	All	-	96847117	96847117	96847118	96810019
150	200	6	3.0	-	132SA	All	96039358	-	96847117	96847118	96810020
150	200	6	4.0	4.0	132MA	All	96039358	-	96847117	96847118	96810020
150	200	6	-	5.5	132MB	All	96039358	-	96847117	96847118	96810020
150	200	6	-	7.5	160M	All	96039359	-	96847117	96847118	96810021
150	250	2	132	-	315M	All	-	96306479	96306479	96847125	96306484
150	250	2	160	-	315L	All	-	96306479	96306479	96847125	96306484
150	250	2	200	-	315L	All	-	96306479	96306479	96847125	96306484
150	250	4	18.5	-	180M	All	-	96306478	96306478	96847124	96306481
150	250	4	22	-	180L	All	-	96306478	96306478	96847124	96306481
150	250	4	30	30	200L	All	-	96306478	96306478	96847124	96306482
150	250	4	37	37	225S	All	-	96306479	96306479	96847125	96306483
150	250	4	45	45	225M	All	-	96306479	96306479	96847125	96306483

Pump type		Motor					Stub shaft	Split shaft		Motor bush
		Poles	Power [kW]		Frame size	Make	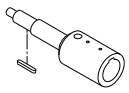	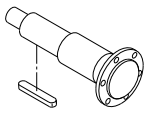		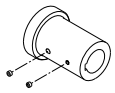
							Material code			
			50 Hz	60 Hz			A, B, C, D, E, F, G, H, S	A, B, C, D, E, F, G, H, S	K, M, N, P	I, J, L, R , T, U, W
150	250	4	-	55	250M	Siemens, MMG-E	-	96306479	96306479	96847125	96306484
150	250	4	-	55	250SC	MMG-G, EFF1 & EFF2	-	96306479	96306479	96847125	96810023
150	250	4	-	75	280S	Siemens, MMG-E	-	96306479	96306479	96847125	96306485
150	250	4	-	75	250MC	MMG-G, EFF1 & EFF2	-	96306479	96306479	96847125	96810023
150	250	4	15.0	-	160L	All	-	96306478	96306478	96847124	96810021
150	250	6	5.5	-	132MB	All	-	96306478	96306478	96847124	96810020
150	250	6	7.5	-	160M	All	-	96306478	96306478	96847124	96810021
150	250	6	-	15	180L	All	-	96306478	96306478	96847124	96306481
150	250	6	-	18.5	200LA	All	-	96306478	96306478	96847124	96306482
150	250	6	11.0	11	160L	All	-	96306478	96306478	96847124	96810021
150	315	4	37	-	225S	All	-	96306479	96306479	96847125	96306483
150	315	4	45	-	225M	All	-	96306479	96306479	96847125	96306483
150	315	4	55	55	250M	Siemens, MMG-E	-	96306479	96306479	96847125	96306484
150	315	4	55	55	250SC	MMG-G, EFF1 & EFF2	-	96306479	96306479	96847125	96810023
150	315	4	75	75	280S	Siemens, MMG-E	-	96306479	96306479	96847125	96306485
150	315	4	75	75	250MC	MMG-G, EFF1 & EFF2	-	96306479	96306479	96847125	96810023
150	315	4	90	90	280M	Siemens, MMG-E	-	96306479	96306479	96847125	96306485
150	315	4	90	90	280S	MMG-G, EFF1 & EFF2	-	96306479	96306479	96847125	96306486
150	315	4	-	110	315S	Siemens, MMG-E	-	96306479	96306479	96847125	96306486
150	315	4	-	110	280M	MMG-G, EFF1 & EFF2	-	96306479	96306479	96847125	96306486
150	315	4	-	132	315M	Siemens, MMG-E	-	96306479	96306479	96847125	96306486
150	315	4	-	132	315S	MMG-G, EFF1 & EFF2	-	96306479	96306479	96847125	96306487
150	315	6	11.0	-	160L	All	-	96306478	96306478	96847124	96810021
150	315	6	15.0	-	180L	All	-	96306478	96306478	96847124	96306481
150	315	6	18.5	18.5	200LA	Siemens	-	96306478	96306478	96847124	96306482
150	315	6	22	22	200LB	Siemens	-	96306478	96306478	96847124	96306482
150	315	6	30	30	225M	Siemens	-	96306479	96306479	96847125	96306483
150	315	6	-	37	250M	Siemens	-	96306479	96306479	96847125	96306484
150	315	6	-	37	250S	MMG-G, EFF1 & EFF2	-	96306479	96306479	96847125	96810023
150	315.1	2	200	-	315L		-	96306479	96306479	96847125	96306484
150	315.1	2	160	-	315L		-	96306479	96306479	96847125	96306484
150	315.1	4	-	75	280S		-	96306479	96306479	96847125	96306485
150	315.1	4	-	55	250M		-	96306479	96306479	96847125	96306484
150	315.1	4	45	45	225M		-	96306479	96306479	96847125	96306483
150	315.1	4	37	37	225S		-	96306479	96306479	96847125	96306483
150	315.1	4	30	30	200L		-	96306478	96306478	96847124	96306482
150	315.1	4	22	-	180L		-	96306478	96306478	96847124	96306481
150	315.1	4	18.5	-	180M		-	96306478	96306478	96847124	96306481
150	315.1	6	-	22	200L		-	96306478	96306478	96847124	96306482
150	315.1	6	-	18.5	200L		-	96306478	96306478	96847124	96306482
150	315.1	6	15	15	180L		-	96306478	96306478	96847124	96306481
150	315.1	6	11	11	160L		-	96306478	96306478	96847124	96306481
150	315.1	6	7.5	7.5	160M		-	96306478	96306478	96847124	96810021
150	315.1	6	5.5	-	132M		-	96306478	96306478	96847124	96810020
150	315.2	2	200	-	315L		-	96306479	96306479	96847125	96306484
150	315.2	2	160	-	315L		-	96306479	96306479	96847125	96306484
150	315.2	4	75	75	280S		-	96306479	96306479	96847125	96306485
150	315.2	4	55	55	250M		-	96306479	96306479	96847125	96306484

Pump type		Motor					Stub shaft	Split shaft			Motor bush
		Poles	Power [kW]		Frame size	Make	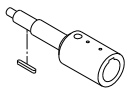	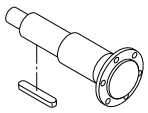			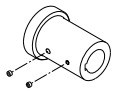
							Material code				
			50 Hz	60 Hz			A, B, C, D, E, F, G, H, S	A, B, C, D, E, F, G, H, S	K, M, N, P	I, J, L, R , T, U, W	
150	315.2	4	45	45	225M		-	96306479	96306479	96847125	96306483
150	315.2	4	37	37	225S		-	96306479	96306479	96847125	96306483
150	315.2	4	30	-	200L		-	96306478	96306478	96847124	96306482
150	315.2	4	22	-	180L		-	96306478	96306478	96847124	96306481
150	315.2	6	-	22	200L		-	96306478	96306478	96847124	96306482
150	315.2	6	18.5	18.5	200L		-	96306478	96306478	96847124	96306482
150	315.2	6	15	15	180L		-	96306478	96306478	96847124	96306481
150	315.2	6	11	11	160L		-	96306478	96306478	96847124	96306481
150	315.2	6	7.5	-	160M		-	96306478	96306478	96847124	96810021
150	400	4	55	-	250M	Siemens, MMG-E	-	96306480	96306480	96847127	96306484
150	400	4	55	-	250SC	MMG-G, EFF1 & EFF2	-	96306480	96306480	96847127	96810023
150	400	4	75	-	280S	Siemens, MMG-E	-	96306480	96306480	96847127	96306485
150	400	4	75	-	250MC	MMG-G, EFF1 & EFF2	-	96306480	96306480	96847127	96810023
150	400	4	90	90	280M	Siemens, MMG-E	-	96306480	96306480	96847127	96306485
150	400	4	90	90	280S	MMG-G, EFF1 & EFF2	-	96306480	96306480	96847127	96306486
150	400	4	110	110	315S	Siemens, MMG-E	-	96306480	96306480	96847127	96306486
150	400	4	110	110	280M	MMG-G, EFF1 & EFF2	-	96306480	96306480	96847127	96306486
150	400	4	132	132	315M	Siemens, MMG-E	-	96306480	96306480	96847127	96306486
150	400	4	132	132	315S	MMG-G, EFF1 & EFF2	-	96306480	96306480	96847127	96306487
150	400	4	160	160	315M	Siemens, MMG-E	-	96306480	96306480	96847127	96306486
150	400	4	160	160	315M	MMG-G, EFF1 & EFF2	-	96306480	96306480	96847127	96306487
150	400	4	-	200	315L	Siemens, MMG-E	-	96306480	96306480	96847127	96306486
150	400	4	-	200	315M	MMG-G, EFF1 & EFF2	-	96306480	96306480	96847127	96306487
150	400	6	18.5	-	200LA	Siemens	-	96306488	96306488	96847126	96306482
150	400	6	22	22	200LB	Siemens	-	96306488	96306488	96847126	96306482
150	400	6	30	30	225M	Siemens	-	96306480	96306480	96847127	96306483
150	400	6	37	37	250M	Siemens, MMG-E	-	96306480	96306480	96847127	96306484
150	400	6	37	37	250S	MMG-G, EFF1 & EFF2	-	96306480	96306480	96847127	96810023
150	400	6	45	45	280S	Siemens, MMG-E	-	96306480	96306480	96847127	96306485
150	400	6	45	45	250M	MMG-G, EFF1 & EFF2	-	96306480	96306480	96847127	96810023
150	400	6	-	55	280M	Siemens, MMG-E	-	96306480	96306480	96847127	96306485
150	400	6	-	55	280S	MMG-G, EFF1 & EFF2	-	96306480	96306480	96847127	96306486
150	400	6	-	75	315S	Siemens, MMG-E	-	96306480	96306480	96847127	96306486
150	400	6	-	75	280M	MMG-G, EFF1 & EFF2	-	96306480	96306480	96847127	96306486
150	500	4	132	-	315M	Siemens, MMG-E	-	96847130	96847130	96847131	96306486
150	500	4	132	-	315S	MMG-G, EFF1 & EFF2	-	96847130	96847130	96847131	96306487
150	500	4	160	-	315M	Siemens, MMG-E	-	96847130	96847130	96847131	96306486
150	500	4	160	-	315M	MMG-G, EFF1 & EFF2	-	96847130	96847130	96847131	96306487
150	500	4	200	-	315L	Siemens, MMG-E	-	96847130	96847130	96847131	96306486
150	500	4	200	-	315M	MMG-G, EFF1 & EFF2	-	96847130	96847130	96847131	96306487
150	500	6	37	-	250M	Siemens, MMG-E	-	96847130	96847130	96847131	96306484
150	500	6	37	-	250S	MMG-G, EFF1 & EFF2	-	96847130	96847130	96847131	96810023
150	500	6	45	-	280S	Siemens, MMG-E	-	96847130	96847130	96847131	96306485
150	500	6	45	-	250M	MMG-G, EFF1 & EFF2	-	96847130	96847130	96847131	96810023
150	500	6	55	55	280M	Siemens, MMG-E	-	96847130	96847130	96847131	96306485
150	500	6	55	55	280S	MMG-G, EFF1 & EFF2	-	96847130	96847130	96847131	96306486
150	500	6	75	75	315S	Siemens, MMG-E	-	96847130	96847130	96847131	96306486
150	500	6	75	75	280M	MMG-G, EFF1 & EFF2	-	96847130	96847130	96847131	96306486

Pump type		Motor					Stub shaft	Split shaft		Motor bush
		Poles	Power [kW]		Frame size	Make	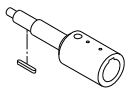	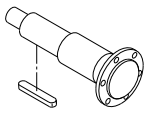		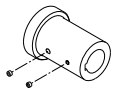
							Material code			
			50 Hz	60 Hz			A, B, C, D, E, F, G, H, S	A, B, C, D, E, F, G, H, S	K, M, N, P	I, J, L, R , T, U, W
150	500	6	-	90	315M	Siemens, MMG-E	-	96847130	96847130	96847131	96306486
150	500	6	-	90	315S	MMG-G, EFF1 & EFF2	-	96847130	96847130	96847131	96306487
150	500	6	-	110	315	Siemens, MMG-E	-	96847130	96847130	96847131	96306486
150	500	6	-	110	315M	MMG-G, EFF1 & EFF2	-	96847130	96847130	96847131	96306487
150	500	6	-	132	315L	MMG-G, EFF1 & EFF2	-	96847130	96847130	96847131	96306487
150	500	6	-	132	315L	MMG-G, EFF1 & EFF2	-	96847130	96847130	96847131	96306487
200	400	4	37	-	225S		-	96306480	-	-	96306483
200	400	4	45	-	225M		-	96306480	-	-	96306483
200	400	4	55	55	250M	Siemens, MMG-E	-	96306480	-	-	96306484
200	400	4	55	55	250SC	MMG-G, EFF1 & EFF2	-	96306480	-	-	96810023
200	400	4	75	75	280S	Siemens, MMG-E	-	96306480	-	-	96306485
200	400	4	75	75	250MC	MMG-G, EFF1 & EFF2	-	96306480	-	-	96810023
200	400	4	90	90	280M	Siemens, MMG-E	-	96306480	-	-	96306485
200	400	4	90	90	280S	MMG-G, EFF1 & EFF2	-	96306480	-	-	96306486
200	400	4	110	110	315S	Siemens, MMG-E	-	96306480	-	-	96306486
200	400	4	110	110	280M	MMG-G, EFF1 & EFF2	-	96306480	-	-	96306487
200	400	4	132	132	315M	Siemens, MMG-E	-	96306480	-	-	96306486
200	400	4	132	132	315S	MMG-G, EFF1 & EFF2	-	96306480	-	-	96306487
200	400	4	-	160	315L	Siemens, MMG-E	-	96306480	-	-	96306486
200	400	4	-	160	315M	MMG-G, EFF1 & EFF2	-	96306480	-	-	96306487
200	400	4	-	200	315L	Siemens, MMG-E	-	96306480	-	-	96306486
200	400	4	-	200	315M	MMG-G, EFF1 & EFF2	-	96306480	-	-	96306487
200	400	6	15	-	180L		-	96306488	-	-	96306481
200	400	6	18.5	-	200L		-	96306488	-	-	96306482
200	400	6	22	22	200L		-	96306488	-	-	96306482
200	400	6	30	30	225M		-	96306480	-	-	96306483
200	400	6	37	37	250M		-	96306480	-	-	96306484
200	400	6	37	37	250S		-	96306480	-	-	96810023
200	400	6	-	45	280S	Siemens, MMG-E	-	96306480	-	-	96306485
200	400	6	-	45	250M	MMG-G, EFF1 & EFF2	-	96306480	-	-	96810023
200	400	6	-	55	280M	Siemens, MMG-E	-	96306480	-	-	96306485
200	400	6	-	55	280S	MMG-G, EFF1 & EFF2	-	96306480	-	-	96306486
200	450	4	75	75	280S	Siemens, MMG-E	-	96306480	-	-	96306485
200	450	4	75	75	250MC	MMG-G, EFF1 & EFF2	-	96306480	-	-	96810023
200	450	4	90	90	280M	Siemens, MMG-E	-	96306480	-	-	96306485
200	450	4	90	90	280S	MMG-G, EFF1 & EFF2	-	96306480	-	-	96306486
200	450	4	110	110	315S	Siemens, MMG-E	-	96306480	-	-	96306486
200	450	4	110	110	280M	MMG-G, EFF1 & EFF2	-	96306480	-	-	96306486
200	450	4	132	132	315M	Siemens, MMG-E	-	96306480	-	-	96306486
200	450	4	132	132	315S	MMG-G, EFF1 & EFF2	-	96306480	-	-	96306487
200	450	4	160	160	315L	Siemens, MMG-E	-	96306480	-	-	96306486
200	450	4	160	160	315M	MMG-G, EFF1 & EFF2	-	96306480	-	-	96306487
200	450	4	-	200	315L	Siemens, MMG-E	-	96306480	-	-	96306486
200	450	4	-	200	315M	MMG-G, EFF1 & EFF2	-	96306480	-	-	96306487
200	450	4	-	288	315L	Siemens	-	96306480	-	-	96306487
200	450	4	-	250	355M	MMG-E	-	96306480	-	-	96810026
200	450	4	-	250	315C	MMG-G, EFF1 & EFF2	-	96306480	-	-	96810026
200	450	6	18.5	-	200L		-	96306488	-	-	96306482

Pump type		Motor					Stub shaft	Split shaft			Motor bush
		Poles	Power [kW]		Frame size	Make	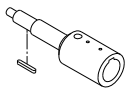	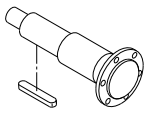			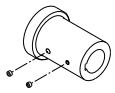
							Material code				
			50 Hz	60 Hz			A, B, C, D, E, F, G, H, S	A, B, C, D, E, F, G, H, S	K, M, N, P	I, J, L, R , T, U, W	
200	450	6	22	-	200L		-	96306488	-	-	96306482
200	450	6	30	-	225M		-	96306480	-	-	96306483
200	450	6	37	37	250M	Siemens, MMG-E	-	96306480	-	-	96306484
200	450	6	37	37	250S	MMG-G, EFF1 & EFF2	-	96306480	-	-	96810023
200	450	6	45	45	280S	Siemens, MMG-E	-	96306480	-	-	96306485
200	450	6	45	45	250M	MMG-G, EFF1 & EFF2	-	96306480	-	-	96810023
200	450	6	-	55	280M	Siemens, MMG-E	-	96306480	-	-	96306485
200	450	6	-	55	280S	MMG-G, EFF1 & EFF2	-	96306480	-	-	96306486
200	450	6	-	75	315S	Siemens, MMG-E	-	96306480	-	-	96306486
200	450	6	-	75	280M	MMG-G, EFF1 & EFF2	-	96306480	-	-	96306486
200	450	6	-	90	315M	Siemens, MMG-E	-	96306480	-	-	96306486
200	450	6	-	90	315S	MMG-G, EFF1 & EFF2	-	96306480	-	-	96306487
250	350	4	37	-	225S		-	96306480	-	-	96306483
250	350	4	45	-	225M		-	96306480	-	-	96306483
250	350	4	55	-	250M		-	96306480	-	-	96306484
250	350	4	55	-	250SC		-	96306480	-	-	96810023
250	350	4	75	75	280S	Siemens, MMG-E	-	96306480	-	-	96306485
250	350	4	75	75	250MC	MMG-G, EFF1 & EFF2	-	96306480	-	-	96810023
250	350	4	90	90	280M	Siemens, MMG-E	-	96306480	-	-	96306485
250	350	4	90	90	280S	MMG-G, EFF1 & EFF2	-	96306480	-	-	96306486
250	350	4	-	110	315S	Siemens, MMG-E	-	96306480	-	-	96306486
250	350	4	-	110	280M	MMG-G, EFF1 & EFF2	-	96306480	-	-	96306486
250	350	4	-	132	315M	Siemens, MMG-E	-	96306480	-	-	96306486
250	350	4	-	132	315S	MMG-G, EFF1 & EFF2	-	96306480	-	-	96306487
250	350	6	11	-	160L		-	96306488	-	-	96810021
250	350	6	15	-	180L		-	96306488	-	-	96306481
250	350	6	18.5	-	200L		-	96306488	-	-	96306482
250	350	6	22	22	200L		-	96306488	-	-	96306482
250	350	6	-	30	225M		-	96306480	-	-	96306483
250	350	6	-	37	250M	Siemens, MMG-E	-	96306480	-	-	96306484
250	350	6	-	37	250S	MMG-G, EFF1 & EFF2	-	96306480	-	-	96810023
250	350	6	-	45	280S	Siemens, MMG-E	-	96306480	-	-	96306485
250	350	6	-	45	250M	MMG-G, EFF1 & EFF2	-	96306480	-	-	96810023
250	400	4	45	-	225M		-	96306480	-	-	96306483
250	400	4	55	-	250M	Siemens, MMG-E	-	96306480	-	-	96306484
250	400	4	55	-	250SC	MMG-G, EFF1 & EFF2	-	96306480	-	-	96810023
250	400	4	75	75	280S	Siemens, MMG-E	-	96306480	-	-	96306485
250	400	4	75	75	250MC	MMG-G, EFF1 & EFF2	-	96306480	-	-	96810023
250	400	4	90	90	280M	Siemens, MMG-E	-	96306480	-	-	96306485
250	400	4	90	90	280S	MMG-G, EFF1 & EFF2	-	96306480	-	-	96306486
250	400	4	110	110	315S	Siemens, MMG-E	-	96306480	-	-	96306486
250	400	4	110	110	280M	MMG-G, EFF1 & EFF2	-	96306480	-	-	96306486
250	400	4	132	132	315M	Siemens, MMG-E	-	96306480	-	-	96306486
250	400	4	132	132	315S	MMG-G, EFF1 & EFF2	-	96306480	-	-	96306487
250	400	4	160	160	315L	Siemens, MMG-E	-	96306480	-	-	96306486
250	400	4	160	160	315M	MMG-G, EFF1 & EFF2	-	96306480	-	-	96306487
250	400	4	-	200	315L	Siemens, MMG-E	-	96306480	-	-	96306486
250	400	4	-	200	315M	MMG-G, EFF1 & EFF2	-	96306480	-	-	96306487

Pump type		Motor					Stub shaft	Split shaft			Motor bush
		Poles	Power [kW]		Frame size	Make	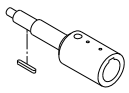	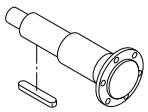			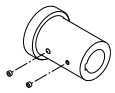
							Material code				
			50 Hz	60 Hz			A, B, C, D, E, F, G, H, S	A, B, C, D, E, F, G, H, S	K, M, N, P	I, J, L, R , T, U, W	
250	400	4	-	288	315L	Siemens	-	96306480	-	-	96306487
250	400	4	-	250	355M	MMG-E	-	96306480	-	-	96810026
250	400	4	-	250	315C	MMG-G, EFF1 & EFF2	-	96306480	-	-	96810026
250	400	6	15	-	180L		-	96306488	-	-	96306481
250	400	6	18.5	-	200L		-	96306488	-	-	96306482
250	400	6	22	-	200L		-	96306488	-	-	96306482
250	400	6	30	30	225M		-	96306480	-	-	96306483
250	400	6	37	37	250M	Siemens, MMG-E	-	96306480	-	-	96306484
250	400	6	37	37	250S	MMG-G, EFF1 & EFF2	-	96306480	-	-	96810023
250	400	6	45	45	280S	Siemens, MMG-E	-	96306480	-	-	96306485
250	400	6	45	45	250M	MMG-G, EFF1 & EFF2	-	96306480	-	-	96810023
250	400	6	-	55	280M	Siemens, MMG-E	-	96306480	-	-	96306485
250	400	6	-	55	280S	MMG-G, EFF1 & EFF2	-	96306480	-	-	96306486
250	400	6	-	75	315S	Siemens, MMG-E	-	96306480	-	-	96306486
250	400	6	-	75	280M	MMG-G, EFF1 & EFF2	-	96306480	-	-	96306486
250	400	6	-	90	315M	Siemens, MMG-E	-	96306480	-	-	96306486
250	400	6	-	90	315S	MMG-G, EFF1 & EFF2	-	96306480	-	-	96306487
250	450	4	75	-	280S	Siemens, MMG-E	-	96847130	-	-	96306485
250	450	4	75	-	250M	MMG-G, EFF1 & EFF2	-	96847130	-	-	96810023
250	450	4	90	-	280M	Siemens, MMG-E	-	96847130	-	-	96306485
250	450	4	90	-	280S	MMG-G, EFF1 & EFF2	-	96847130	-	-	96306486
250	450	4	110	110	315S	Siemens, MMG-E	-	96847130	-	-	96306486
250	450	4	110	110	280M	MMG-G, EFF1 & EFF2	-	96847130	-	-	96306486
250	450	4	132	132	315M	Siemens, MMG-E	-	96847130	-	-	96306486
250	450	4	132	132	315S	MMG-G, EFF1 & EFF2	-	96847130	-	-	96306487
250	450	4	160	160	315L	Siemens, MMG-E	-	96847130	-	-	96306486
250	450	4	160	160	315M	MMG-G, EFF1 & EFF2	-	96847130	-	-	96306487
250	450	4	200	200	315L	Siemens, MMG-E	-	96847130	-	-	96306486
250	450	4	200	200	315M	MMG-G, EFF1 & EFF2	-	96847130	-	-	96306487
250	450	4	-	288	315L	Siemens	-	96306480	-	-	96306487
250	450	4	-	250	355M	MMG-E	-	96306480	-	-	96810026
250	450	4	-	250	315C	MMG-G, EFF1 & EFF2	-	96306480	-	-	96810026
250	450	4	-	362	315L	Siemens	-	96847130	-	-	96306487
250	450	4	-	315	355L	MMG-E	-	96847130	-	-	96810026
250	450	4	-	315	315D	MMG-G, EFF1 & EFF2	-	96847130	-	-	96810026
250	450	6	18.5	-	200L		-	96847130	-	-	96306482
250	450	6	22	-	200L		-	96847130	-	-	96306482
250	450	6	30	-	225M		-	96847130	-	-	96306483
250	450	6	37	37	250M	Siemens, MMG-E	-	96847130	-	-	96306484
250	450	6	37	37	250S	MMG-G, EFF1 & EFF2	-	96847130	-	-	96810023
250	450	6	45	45	280S	Siemens, MMG-E	-	96847130	-	-	96306485
250	450	6	45	45	250M	MMG-G, EFF1 & EFF2	-	96847130	-	-	96810023
250	450	6	55	55	280M	Siemens, MMG-E	-	96847130	-	-	96306485
250	450	6	55	55	280S	MMG-G, EFF1 & EFF2	-	96847130	-	-	96306486
250	450	6	-	75	315S	Siemens, MMG-E	-	96847130	-	-	96306486
250	450	6	-	75	280M	MMG-G, EFF1 & EFF2	-	96847130	-	-	96306486
250	450	6	-	90	315M	Siemens, MMG-E	-	96847130	-	-	96306486
250	450	6	-	90	315S	MMG-G, EFF1 & EFF2	-	96847130	-	-	96306487

Pump type		Motor					Stub shaft	Split shaft			Motor bush
		Poles	Power [kW]		Frame size	Make	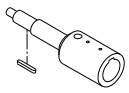	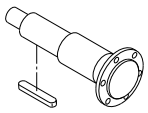			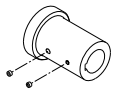
							Material code				
			50 Hz	60 Hz			A, B, C, D, E, F, G, H, S	A, B, C, D, E, F, G, H, S	K, M, N, P	I, J, L, R , T, U, W	
250	450	6	-	110	315L	Siemens, MMG-E	-	96847130	-	-	96306486
250	450	6	-	110	315M	MMG-G, EFF1 & EFF2	-	96847130	-	-	96306487
250	500	4	160	-	315L	Siemens, MMG-E	-	96847130	-	-	96306486
250	500	4	160	-	315M	MMG-G, EFF1 & EFF2	-	96847130	-	-	96306487
250	500	4	200	-	315L	Siemens, MMG-E	-	96847130	-	-	96306486
250	500	4	200	-	315M	MMG-G, EFF1 & EFF2	-	96847130	-	-	96306487
250	500	4	-	288	315	Siemens	-	96847130	-	-	96306487
250	500	4	-	250	355M	MMG-E	-	96847130	-	-	96810026
250	500	4	-	250	315C	MMG-G, EFF1 & EFF2	-	96847130	-	-	96810026
250	500	4	-	362	315	Siemens	-	96847130	-	-	96306487
250	500	4	-	315	355L	MMG-E	-	96847130	-	-	96810026
250	500	4	-	408	355	Siemens	-	96847130	-	-	96810026
250	500	4	-	460	355	Siemens	-	96847130	-	-	96810026
250	500	6	45	-	280S	Siemens, MMG-E	-	96847130	-	-	96306485
250	500	6	45	-	250M	MMG-G, EFF1 & EFF2	-	96847130	-	-	96810023
250	500	6	55	-	280M	Siemens, MMG-E	-	96847130	-	-	96306485
250	500	6	55	-	280S	MMG-G, EFF1 & EFF2	-	96847130	-	-	96306486
250	500	6	75	75	315S	Siemens, MMG-E	-	96847130	-	-	96306486
250	500	6	75	75	280M	MMG-G, EFF1 & EFF2	-	96847130	-	-	96306486
250	500	6	90	90	315M	Siemens, MMG-E	-	96847130	-	-	96306486
250	500	6	90	90	315S	MMG-G, EFF1 & EFF2	-	96847130	-	-	96306487
250	500	6	-	110	315L	Siemens, MMG-E	-	96847130	-	-	96306486
250	500	6	-	110	315M	MMG-G, EFF1 & EFF2	-	96847130	-	-	96306487
250	500	6	-	132	315L	Siemens, MMG-E	-	96847130	-	-	96306486
250	500	6	-	132	315M	MMG-G, EFF1 & EFF2	-	96847130	-	-	96306487
250	500	6	-	160	315L	Siemens	-	96847130	-	-	96306486
250	500	6	-	160	355M	MMG-E	-	96847130	-	-	96306486
250	500	6	-	160	315C	MMG-G, EFF1 & EFF2	-	96847130	-	-	96810026

Wear ring

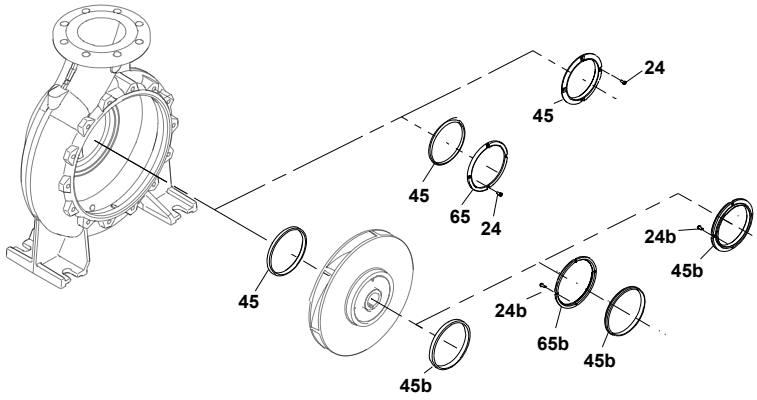

TM044731

Material code: A, B, C, D, E, F, G, H, S, T		Material code: J, N, P, R, W		Material code: I, K, L, M, U	
Pos. 45	**Pos. 45b**	**Pos. 45**	**Pos. 45b**	**Pos. 45**	**Pos. 45b**
45: 1 x wear ring	45b: 1 x wear ring	45: 1 x wear ring 65: 1 x wear ring retainer 24: 4 x screw	45b: 1 x wear ring 65b: 1 x wear ring retainer 24b: 4 x screw	45: 1 x wear ring 24: 4 x screw	45b: 1 x wear ring 24b: 4 x screw

Material code: A, B, C, D, E, F, G, H, S, T (pump housing material cast iron)

The material code can be found in the type designation on the nameplate.

NB 32 -125 .1 /104 A -F -A -BAQE

Pump type		Wear ring inner diameter [mm]		Wear ring material			
				Bronze/brass		GG	
				A, B, C, D, E, F, G, H, S, T		A, B, C, D, E, F, G, H, S, T	
		Pos. 45	Pos. 45b	Pos. 45	Pos. 45b	Pos. 45	Pos. 45b
32 -	125.1			*96810099*	-	-	-
	160.1			*96810098*	-	-	-
	200.1			*96810098*	-	-	-
	125			*96810099*	-	-	-
	160			*96810099*	*96810102*	-	-
	200			*96810099*	*96810102*	-	-
	250			*96810099*	*96810103*	-	-
40 -	125			*96810100*	*96810102*	-	-
	160			*96810100*	*96810102*	-	-
	200			*96810100*	*96810102*	-	-
	250			*96810100*	*96810103*	-	-
	315			*96810102*	*96797628*	-	-
50 -	125			*96810102*	*96810102*	-	-
	160			*96810102*	*96810102*	-	-
	200			*96810102*	*96810102*	-	-
	250			*96810102*	*96810103*	-	-
	315			*96810103*	*96797628*	-	-

Pump type		Wear ring inner diameter [mm]		Wear ring material			
				Bronze/brass		GG	
				A, B, C, D, E, F, G, H, S, T		A, B, C, D, E, F, G, H, S, T	
		Pos. 45	Pos. 45b	Pos. 45	Pos. 45b	Pos. 45	Pos. 45b
65 -	125			*96810103*	*96810102*	-	-
	160			*96810103*	*96810104*	-	-
	200			*96810104*	*96810104*	-	-
	250			*96810104*	*96797628*	-	-
	315			*96810104*	*96797628*	-	-
80 -	160			*96810106*	*96810104*	-	-
	200			*96810106*	*96797628*	-	-
	250			*96810106*	*96797628*	-	-
	315			*96810106*	*96797628*	-	-
	400			*96797628*	*96810109*	-	-
100 -	160			*96810107*	*96810104*	-	-
	200	174	154	*96810108*	*96797628*	-	-
	200	154	154	*96797628*	*96797628*	-	-
	250			*96797628*	*96797628*	-	-
	315			*96797628*	*96797628*	-	-
	400			*96810109*	*96810109*	-	-
125 -	200			*96810108*	*96797628*	-	-
	250			*96810109*	*96810109*	-	-
	315			*96810109*	*96797628*	-	-
	400			*96810109*	*96810109*	-	-
	500			*96810109*	*96810112*	-	-
150 -	200			*96810110*	*96810109*	-	-
	250	210	185	*96810111*	*96810109*	-	-
	250	185	185	*96810109*	*96810109*	-	-
	315.1			*96810111*	*96810112*	-	-
	315.2			*96810111*	*96810112*	-	-
	315			*96810111*	*96810112*	-	-
	400			*96810112*	*96810112*	-	-
	500			*96810112*	*96810112*	-	-
200 -	400			*96939611*	*96939611*	*96939606*	*96939609*
	450			*96939612*	*96939612*	*96939607*	*96939607*
250 -	350			*96939613*	*96939615*	*96939608*	*96939607*
	400			*96939615*	*96939615*	*96939607*	*96939607*
	450			*96939614*	*96939614*	*96939607*	*96939607*
	500			*96939615*	*96939615*	*96939610*	*96939610*

Note: Oversize pump use the same wear ring as standard pump.

Material code: I, J, K, L, M, N, P, R, W, U (pump housing materials 1.4408 or 1.4517)

Pump type		Wear ring inner diameter [mm]		Material code	J, N, P, R, W				I, K, L, M, U			
				ACS approval	-		-		-		Yes	
				Wear ring	Carbon-graphite-filled PTFE		Carbon-graphite-filled PTFE		1.4517		1.4517	
				Screw	1.4539		1.4401		1.4539		1.4401	
		Pos. 45	Pos. 45b		Pos. 45	Pos. 45b	Pos. 45	Pos. 45b	Pos. 45	Pos. 45b	Pos. 45	Pos. 45b
	125.1				96810113	96774200	96810114	96810117	96810134	96810138	96810135	96810139
	160.1				97939262	96774200	97939263	96810117	97939264	96810138	97939265	96810139
	200.1				97939262	96774200	97939263	96810117	97939264	96810138	97939265	96810139
32 -	125				96810113	96774200	96810114	96810117	96810134	96810138	96810135	96810139
	160				96810113	96774200	96810114	96810117	96810134	96810138	96810135	96810139
	200				96810113	96774200	96810114	96810117	96810134	96810138	96810135	96810139
	250				96810113	96810120	96810114	96810121	96810134	96810142	96810135	96810143
	125				96810115	96774200	96810116	96810117	96810136	96810138	96810137	96810139
	160				96810115	96774200	96810116	96810117	96810136	96810138	96810137	96810139
40 -	200				96810115	96774200	96810116	96810117	96810136	96810138	96810137	96810139
	250				96810115	96810120	96810116	96810121	96810136	96810142	96810137	96810143
	315				96774200	96810130	96810117	96810131	96810138	96810152	96810139	96810153
	125				96774200	96774200	96810117	96810117	96810138	96810138	96810139	96810139
	160				96774200	96774200	96810117	96810117	96810138	96810138	96810139	96810139
50 -	200				96774200	96774200	96810117	96810117	96810138	96810138	96810139	96810139
	250				96774200	96810120	96810117	96810121	96810138	96810142	96810139	96810143
	315				96810120	96810130	96810121	96810131	96810142	96810152	96810143	96810153
	125				96810120	96774200	96810121	96810117	96810142	96810138	96810143	96810139
	160				96810120	96810124	96810121	96810125	96810142	96810146	96810143	96810147
65 -	200				96810124	96810124	96810125	96810125	96810142	96810146	96810147	96810147
	250				96810124	96810130	96810125	96810131	96810146	96810152	96810147	96810153
	315				96810124	96810130	96810125	96810131	96810146	96810152	96810147	96810153
	160				96810128	96810124	96810129	96810125	96810150	96810146	96810151	96810147
	200				96810128	96810130	96810129	96810131	96810150	96810152	96810151	96810153
	250				96810128	96810130	96810129	96810131	96810150	96810152	96810151	96810153
80 -	315				96810128	96810130	96810129	96810131	96810150	96810152	96810151	96810153
	315 [1)]				96810128	96810130	96810129	96810131	96810150	96810152	96810151	96810153
	400				96810130	96810132	96810131	96810133	96810152	96810154	96810153	96810155
	160				96810118	96810124	96810119	96810125	96810148	96810146	96810149	96810147
	200				96810130	96810130	96810131	96810131	96810152	96810152	96810153	96810153
	250				96810130	96810130	96810131	96810131	96810152	96810152	96810153	96810153
100 -	250 [1)]				96810130	96810130	96810131	96810131	96810152	96810152	96810153	96810153
	315				96810130	96810130	96810131	96810131	96810152	96810152	96810153	96810153
	315 [1)]				96810130	96810130	96810131	96810131	96810152	96810152	96810153	96810153
	400				96810132	96810132	96810133	96810133	96810154	96810154	96810155	96810155
	200	174	154		97939252	96810130	97939253	96810131	97939254	96810152	97939255	96810153
	200	154	154		96810130	96810130	96810131	96810131	96810152	96810152	96810153	96810153
	250				96810132	96810132	96810133	96810133	96810154	96810154	96810155	96810155
125 -	250 [1)]				96810132	96810132	96810133	96810133	96810154	96810154	96810155	96810155
	315				96810132	96810130	96810133	96810131	96810154	96810152	96810155	96810153
	400				96810132	96810132	96810133	96810133	96810154	96810154	96810155	96810155
	500				96810132	96810132	96810133	96810133	96810154	96810154	96810155	96810155

Pump type		Wear ring inner diameter [mm]		Material code	J, N, P, R, W				I, K, L, M, U			
				ACS approval	-		-		-		Yes	
				Wear ring	Carbon-graphite-filled PTFE		Carbon-graphite-filled PTFE		1.4517		1.4517	
				Screw	1.4539		1.4401		1.4539		1.4401	
		Pos. 45	Pos. 45b		Pos. 45	Pos. 45b	Pos. 45	Pos. 45b	Pos. 45	Pos. 45b	Pos. 45	Pos. 45b
150 -	200				*97939256*	*96810132*	*97939257*	*96810133*	*97939258*	*96810154*	*97939259*	*96810155*
	250	210	185		*96887266*	*96810132*	*96887264*	*96810133*	*96887262*	*96810154*	*96887255*	*96810155*
	250	185	185		*96810132*	*96810132*	*96810133*	*96810133*	*96810154*	*96810154*	*96810155*	*96810155*
	315.1				*97739720*	*96887266*	*97739719*	*96887264*	*97739717*	*96887262*	*97739700*	*96887255*
	315.2				*97739720*	*96887266*	*97739719*	*96887264*	*97739717*	*96887262*	*97739700*	*96887255*
	315				*97739720*	*96887266*	*97739719*	*96887264*	*97739717*	*96887262*	*97739700*	*96887255*
	400				*97739720*	*97739720*	*97739719*	*97739719*	*97739717*	*97739717*	*97739700*	*97739700*
	400 [1]				*97739720*	*97739720*	*97739719*	*97739719*	*97739717*	*97739717*	*97739700*	*97739700*
	500				*97739720*	*97739720*	*97739719*	*97739719*	*97739717*	*97739717*	*97739700*	*97739700*
200 -	400				-	-	-	-	-	-	-	-
	450				-	-	-	-	-	-	-	-
250 -	350				-	-	-	-	-	-	-	-
	400				-	-	-	-	-	-	-	-
	450				-	-	-	-	-	-	-	-
	500				-	-	-	-	-	-	-	-

1) Oversize pump.

Note: Oversize pump use the same wear ring as standard pump.

Impeller

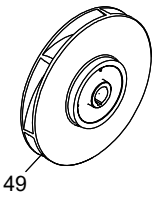

TM044729

Find the impeller in Grundfos Product Center and contact your local sales company.

Nut, washer and key for impeller

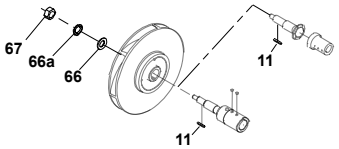

TM044730

Material code: A, B, C, D, E, F, G, H, K, M, N, P, S	Material code: I, J, L, R, T, U, W
11:1 x key	11:1 x key
67:1 x nut	67:1 x nut
66a:1 x lock washer	66a:1 x lock washer
66:1 x washer	66:1 x washer

The material code can be found in the type designation on the nameplate.

NB 32 -125 .1 /104 A -F -A -BAQE

Pump type		Shaft seal dia.	Material code	
			A, B, C, D, E, F, G, H, K, M, N, P, S	I, J, L, R, T, U, W
32 -	125.1	28	*96939128*	*96939129*
	160.1	28	*96939128*	*96939129*
	200.1	28	*96939128*	*96939129*
	125	28	*96939128*	*96939129*
	160	28	*96939128*	*96939129*
	200	28	*96939128*	*96939129*
	250	28	*96939128*	*96939129*
40 -	125	28	*96939128*	*96939129*
	160	28	*96939128*	*96939129*
	200	28	*96939128*	*96939129*
	250	28	*96939128*	*96939129*
	315	38	*96939130*	*96939131*
50 -	125	28	*96939128*	*96939129*
	160	28	*96939128*	*96939129*
	200	28	*96939128*	*96939129*
	250	28	*96939128*	*96939129*
	315	38	*96939130*	*96939131*
65 -	125	28	*96939128*	*96939129*
	160	28	*96939128*	*96939129*
	200	28	*96939128*	*96939129*
	250	38	*96939130*	*96939131*
	315	38	*96939130*	*96939131*
80 -	160	28	*96939128*	*96939129*
	200	38	*96939130*	*96939131*
	250	38	*96939130*	*96939131*
	315	38	*96939130*	*96939131*
	315 [1]	48	*96939132*	*96939133*
	400	48	*96939132*	*96939133*
100 -	160	28	*96939128*	*96939129*
	200	38	*96939130*	*96939131*
	250	38	*96939130*	*96939131*
	250 [1]	48	*96939132*	*96939133*
	315	38	*96939130*	*96939131*
	315 [1]	48	*96939132*	*96939133*
	400	48	*96939132*	*96939133*
125 -	200	38	*96939130*	*96939131*
	250	38	*96939130*	*96939131*
	250 [1]	48	*96939132*	*96939133*
	315	48	*96939132*	*96939133*
	400	48	*96939132*	*96939133*
	500	60	*96939137*	*96939138*
150 -	200	38	*96939130*	*96939131*
	250	48	*96939132*	*96939133*
	315.1	48	*96939132*	*96939133*
	315.2	48	*96939132*	*96939133*
	315	48	*96939132*	*96939133*
	400	48	*96939132*	*96939133*
	400 [1]	55	*96939134*	*96939135*
	500	60	*96939137*	*96939138*
200 -	400	55	*96939134*	*96939135*
	450	55	*96939134*	*96939135*
250 -	350	55	*96939134*	*96939135*
	400	55	*96939134*	*96939135*
	450	60	*96939137*	*96939138*
	500	60	*96939137*	*96939138*

1) Oversize pump.

Sensor for NBE Series 2000

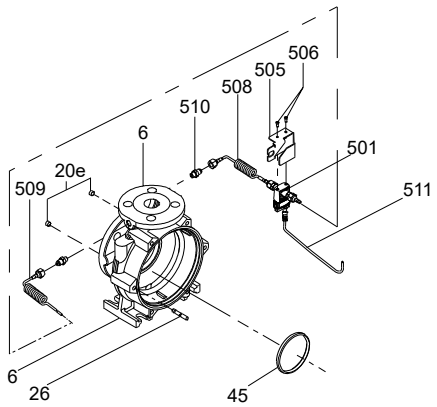

Kit, pump housing
6: 1 x pump housing
20: hexagon socket head plug (can be 2/3/4 pcs)
26:staybolt (can be 6/8/12 pcs)
45:1 x wear ring
Kit, differential-pressure sensor
501: 1 x sensor
506: 2 x screw
511: 1 x cable (including connector to sensor)
Kit, sensor bracket
505: 1 x sensor bracket
Kit, capillary tube
508: 1 x capillary tube
509: 1 x capillary tube
5102 x adapter plug
Kit, cable
511: 1 x cable (including connector to sensor)

Kit, pump housing

Pump type		Pump housing	
		With feet	Without feet
32-	125.1	*99563387*	-
	125	*99563388*	-
	160.1	*99563385*	-
	160	*99563386*	-
	200.1	*99563383*	-
	200	*99563384*	-
	250	*99492504*	-
40-	125	*99563382*	-
	160	*99563381*	-
	200	*99563379*	*99563380*
	250	*99563377*	*99563378*
	315	*99492511*	-
50-	125	*99563376*	-
	160	*99563374*	*99563375*
	200	*99563372*	*99563373*
	250	*99563370*	*99563371*
	315	*99492519*	-
65-	125	*99563366*	-
	160	*99563364*	*99563365*
	200	*99563362*	*99563363*
	250	*99563359*	-
	315	*99563358*	-
80-	160	*99563340*	*99563341*
	200	*99563339*	-
	250	*99563338*	-
100-	160	*99492535*	-
	200	*99492537*	-
125-	200	*99492538*	-
150-	200	*99563389*	-

Kit, differential-pressure sensor

0-4 bar	0-6 bar	0-10 bar
99562724	*99562725*	*99562726*

Kit, bracket for sensor

99562727

Kit, capillary tube

99184237

Kit, cable

99562728

56. NBG

Model B

50/60 Hz

Contents of this chapter

Kit type
Shaft seal
Spacer ring for shaft seal (pos. 105b and 105c)
O-ring
Shaft
Wear ring
Impeller
Nut, washer and key for impeller

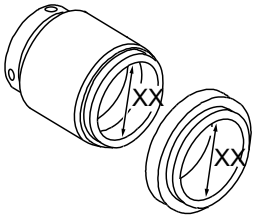

Shaft seal		
MG13/RMG13	M7N	HJ92N / HJ977





Shaft seal designs

Content

Pos.	Description	BAQE	BAQV	BQQE	BQQV	BBQE	BBQV	GQQE	GQQV	DAQF
105	Shaft seal	1	1	1	1	1	1	1	1	1
Burgmann specification	Type	MG13/ XX-G6	MG13/ XX-G6	MG13/ XX-G6	MG13/ XX-G6	MG13/ XX-G6	MG13/ XX-G6	MG13S50/ XX-G6	MG13S50/ XX-G6	HJ92N/ XX-00
	Material	Material code: **A, B, C, D, E, F, G, H, I, J, K, M, N, P, S, T, U, W**								
		AQ1E GG	AQ1V GG	Q7Q7E GG	Q7Q7V GG	BQ1E GG	BQ1V GG	Q1Q1E GG	Q1Q1V GG	AQ1V9 GG
		Material code: **L, R**								
		AQ1E MM	AQ1V MM	Q1Q1E MM	Q1Q1V MM	BQ1E MM	BQ1V MM	Q1Q1E MM	Q1Q1V MM	AQ1V9 MM

Pos.	Description	DQQE	DQQV	DQQX	DQQK	AQQE	AQQX	AQQK	AQQV	AQAE	AQAV
105	Shaft seal	1	1	1	1	1	1	1	1	1	1
Burgmann specification	Type	HJ92N/ XX-00	HJ92N/ XX-00	HJ92N/ XX-00	HJ92N/ XX-00	M7N/ XX-00	M7N/ XX-00	M7N/ XX-00	M7N/ XX-00	M7N/ XX-00	M7N/ XX-00
	Material	Material code: **A, B, C, D, E, F, G, H, I, J, K, M, N, P, S, T, U, W**									
		Q6Q6E GG	Q6Q6V GG	Q6Q6X4 GG	Q6Q6K23 GG	Q1Q1E GG	Q1Q1X4 GG	Q1Q1K23 GG	Q1Q1V GG	Q1AE GG	Q1AV GG
		Material code: **L, R**									
		Q6Q6E MM	Q6Q6V MM	Q6Q6X4MM	Q6Q6K23MM	Q1Q1E MM	Q1Q1X4MM	Q1Q1K23 MM	Q1Q1V MM	Q1AE MM	Q1AV MM

Note: XX = 28, 38, 48, 55 or 60. XX is the internal diameter of the shaft seal.

Shaft seal

Material code: A, B, C, D, E, F, G, H, I, J, K, M, N, P, S, T, U, W

The material code can be found in the type designation on the nameplate.

NBG 50-32 -125 .1 /142 A -F -A -BAQE

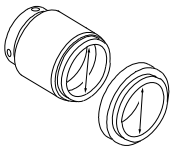

Shaft seal diameter

Pump type		Shaft seal dia.	BAQE	BAQV	BQQE	BQQV	BQQV [1]	BBQE	BBQV	BQBE
			MG13	MG13	MG13	MG13	MG13	MG13	MG13	RMG13
50-32-	125.1	28	96488302	96548353	98434904	98434905	98670789	96551963	97769885	96548351
	160.1	28	96488302	96548353	98434904	98434905	98670789	96551963	97769885	96548351
	200.1	28	96488302	96548353	98434904	98434905	98670789	96551963	97769885	96548351
	125	28	96488302	96548353	98434904	98434905	98670789	96551963	97769885	96548351
	160	28	96488302	96548353	98434904	98434905	98670789	96551963	97769885	96548351
	200	28	96488302	96548353	98434904	98434905	98670789	96551963	97769885	96548351
	250	38	96537605	96548357	98434906	98434908	98670790	96551928	97769887	96548356
65-50-	125	28	96488302	96548353	98434904	98434905	98670789	96551963	97769885	96548351
	160	28	96488302	96548353	98434904	98434905	98670789	96551963	97769885	96548351
65-40-	200	28	96488302	96548353	98434904	98434905	98670789	96551963	97769885	96548351
	250	38	96537605	96548357	98434906	98434908	98670790	96551928	97769887	96548356
	315	38	96537605	96548357	98434906	98434908	98670790	96551928	97769887	96548356
80-65-	125	28	96488302	96548353	98434904	98434905	98670789	96551963	97769885	96548351
	160	28	96488302	96548353	98434904	98434905	98670789	96551963	97769885	96548351
80-50-	200	28	96488302	96548353	98434904	98434905	98670789	96551963	97769885	96548351
	250	38	96537605	96548357	98434906	98434908	98670790	96551928	97769887	96548356
	315	38	96537605	96548357	98434906	98434908	98670790	96551928	97769887	96548356
100-80-	125	28	96488302	96548353	98434904	98434905	98670789	96551963	97769885	96548351
	160	38	96537605	96548357	98434906	98434908	98670790	96551928	97769887	96548356
100-65-	200	38	96537605	96548357	98434906	98434908	98670790	96551928	97769887	96548356
	250	38	96537605	96548357	98434906	98434908	98670790	96551928	97769887	96548356
	315	48	96306472	96658791	98434909	98434941	98670801	96658794	97769889	-
125-80-	160	38	96537605	96548357	98434906	98434908	98670790	96551928	97769887	96548356
	200	38	96537605	96548357	98434906	98434908	98670790	96551928	97769887	96548356
	250	38	96537605	96548357	98434906	98434908	98670790	96551928	97769887	96548356
	315	48	96306472	96658791	98434909	98434941	98670801	96658794	97769889	-
	400.1	48	96306472	96658791	98434909	98434941	98670801	96658794	97769889	-
	400	48	96306472	96658791	98434909	98434941	98670801	96658794	97769889	-
	400 [2]	55	96306475	96658801	98434943	98434944	98670802	96658804	97769891	-
125-100-	160	38	96537605	96548357	98434906	98434908	98670790	96551928	97769887	96548356
	200	38	96537605	96548357	98434906	98434908	98670790	96551928	97769887	96548356
	250	48	96306472	96658791	98434909	98434941	98670801	96658794	97769889	-
	315	48	96306472	96658791	98434909	98434941	98670801	96658794	97769889	-
	400	48	96306472	96658791	98434909	98434941	98670801	96658794	97769889	-
150-125-	200	38	96537605	96548357	98434906	98434908	98670790	96551928	97769887	96548356
	250	48	96306472	96658791	98434909	98434941	98670801	96658794	97769889	-
	315	48	96306472	96658791	98434909	98434941	98670801	96658794	97769889	-
	400	48	96306472	96658791	98434909	98434941	98670801	96658794	97769889	-
	500	60	96658812	96658815	98434945	98434947	98670803	96658818	97769893	-

Pump type		Shaft seal dia.	BAQE	BAQV	BQQE	BQQV	BQQV [1]	BBQE	BBQV	BQBE
			MG13	MG13	MG13	MG13	MG13	MG13	MG13	RMG13
200-150-	200	38	96537605	96548357	98434906	98434908	98670790	96551928	97769887	96548356
	250	48	96306472	96658791	98434909	98434941	98670801	96658794	97769889	-
	315.1	55	96306475	96658801	98434943	98434944	98670802	96658804	97769891	-
	315.2	55	96306475	96658801	98434943	98434944	98670802	96658804	97769891	-
	315	55	96306475	96658801	98434943	98434944	98670802	96658804	97769891	-
	400	55	96306475	96658801	98434943	98434944	98670802	96658804	97769891	-
	500	60	96658812	96658815	98434945	98434947	98670803	96658818	97769893	-
250-200-	400	55	96306475	96658801	98434943	98434944	98670802	96658804	97769891	-
	450	55	96306475	96658801	98434943	98434944	98670802	96658804	97769891	-
300-250-	350	55	96306475	96658801	98434943	98434944	98670802	96658804	97769891	-
	400	55	96306475	96658801	98434943	98434944	98670802	96658804	97769891	-
	450	60	96658812	96658815	98434945	98434947	98670803	96658818	97769893	-
	500	60	96658812	96658815	98434945	98434947	98670803	96658818	97769893	-

1) PWIS-free shaft seal.

2) For 2-pole model only.

Pump type		Shaft seal dia.	GQQE	GQQV	DAQF	DQQE	DQQK	DQQV	DQQX
			MG13S	MG13S	HJ92N	HJ977GN	HJ977GN	HJ977GN	HJ977GN
50-32-	125.1	28	96488303	96504870	96548355	97769895	97769911	97769899	97769907
	160.1	28	96488303	96504870	96548355	97769895	97769911	97769899	97769907
	200.1	28	96488303	96504870	96548355	97769895	97769911	97769899	97769907
	125	28	96488303	96504870	96548355	97769895	97769911	97769899	97769907
	160	28	96488303	96504870	96548355	97769895	97769911	97769899	97769907
	200	28	96488303	96504870	96548355	97769895	97769911	97769899	97769907
	250	38	96537606	96537608	96548359	97769897	97769913	97769901	97769909
65-50-	125	28	96488303	96504870	96548355	97769895	97769911	97769899	97769907
	160	28	96488303	96504870	96548355	97769895	97769911	97769899	97769907
65-40-	200	28	96488303	96504870	96548355	97769895	97769911	97769899	97769907
	250	38	96537606	96537608	96548359	97769897	97769913	97769901	97769909
	315	38	96537606	96537608	96548359	97769897	97769913	97769901	97769909
80-65-	125	28	96488303	96504870	96548355	97769895	97769911	97769899	97769907
	160	28	96488303	96504870	96548355	97769895	97769911	97769899	97769907
80-50-	200	28	96488303	96504870	96548355	97769895	97769911	97769899	97769907
	250	38	96537606	96537608	96548359	97769897	97769913	97769901	97769909
	315	38	96537606	96537608	96548359	97769897	97769913	97769901	97769909
100-80-	125	28	96488303	96504870	96548355	97769895	97769911	97769899	97769907
	160	38	96537606	96537608	96548359	97769897	97769913	97769901	97769909
100-65-	200	38	96537606	96537608	96548359	97769897	97769913	97769901	97769909
	250	38	96537606	96537608	96548359	97769897	97769913	97769901	97769909
	315	48	96306474	96658793	96658796	97685509	97685516	97685511	97685514
125-80-	160	38	96537606	96537608	96548359	97769897	97769913	97769901	97769909
	200	38	96537606	96537608	96548359	97769897	97769913	97769901	97769909
	250	38	96537606	96537608	96548359	97769897	97769913	97769901	97769909
	315	48	96306474	96658793	96658796	97685509	97685516	97685511	97685514
	400.1	48	96306474	96658793	96658796	97685509	97685516	97685511	97685514
	400	48	96306474	96658793	96658796	97685509	97685516	97685511	97685514
	400 [3]	55	96306477	96658803	96658807	97685596	97685608	97685600	97685604
125-100-	160	38	96537606	96537608	96548359	97769897	97769913	97769901	97769909
	200	38	96537606	96537608	96548359	97769897	97769913	97769901	97769909
	250	48	96306474	96658793	96658796	97685509	97685516	97685511	97685514
	315	48	96306474	96658793	96658796	97685509	97685516	97685511	97685514
	400	48	96306474	96658793	96658796	97685509	97685516	97685511	97685514

Pump type		Shaft seal dia.	GQQE	GQQV	DAQF	DQQE	DQQK	DQQV	DQQX
			MG13S	MG13S	HJ92N	HJ977GN	HJ977GN	HJ977GN	HJ977GN
150-125-	200	38	96537606	96537608	96548359	97769897	97769913	97769901	97769909
	250	48	96306474	96658793	96658796	97685509	97685516	97685511	97685514
	315	48	96306474	96658793	96658796	97685509	97685516	97685511	97685514
	400	48	96306474	96658793	96658796	97685509	97685516	97685511	97685514
	500	60	96658814	96658817	96658820	97685598	97685610	97685602	97685606
200-150-	200	38	96537606	96537608	96548359	97769897	97769913	97769901	97769909
	250	48	96306474	96658793	96658796	97685509	97685516	97685511	97685514
	315.1	55	96306477	96658803	96658807	97685596	97685608	97685600	97685604
	315.2	55	96306477	96658803	96658807	97685596	97685608	97685600	97685604
	315	55	96306477	96658803	96658807	97685596	97685608	97685600	97685604
	400	55	96306477	96658803	96658807	97685596	97685608	97685600	97685604
	500	60	96658814	96658817	96658820	97685598	97685610	97685602	97685606
250-200-	400	55	96306477	96658803	96658807	97685596	97685608	97685600	97685604
	450	55	96306477	96658803	96658807	97685596	97685608	97685600	97685604
300-250-	350	55	96306477	96658803	96658807	97685596	97685608	97685600	97685604
	400	55	96306477	96658803	96658807	97685596	97685608	97685600	97685604
	450	60	96658814	96658817	96658820	97685598	97685610	97685602	97685606
	500	60	96658814	96658817	96658820	97685598	97685610	97685602	97685606

3) For 2-pole model only.

Pump type		Shaft seal dia.	AQQE	AQQK	AQQV	AQQX	AQAE	AQAV
			M7N	M7N	M7N	M7N	M7N	M7N
50-32-	125.1	28	96551965	97769915	96551967	97769903	96551964	96551966
	160.1	28	96551965	97769915	96551967	97769903	96551964	96551966
	200.1	28	96551965	97769915	96551967	97769903	96551964	96551966
	125	28	96551965	97769915	96551967	97769903	96551964	96551966
	160	28	96551965	97769915	96551967	97769903	96551964	96551966
	200	28	96551965	97769915	96551967	97769903	96551964	96551966
	250	38	96551960	97769917	96551962	97769905	96551929	96551961
65-50-	125	28	96551965	97769915	96551967	97769903	96551964	96551966
	160	28	96551965	97769915	96551967	97769903	96551964	96551966
65-40-	200	28	96551965	97769915	96551967	97769903	96551964	96551966
	250	38	96551960	97769917	96551962	97769905	96551929	96551961
	315	38	96551960	97769917	96551962	97769905	96551929	96551961
80-65-	125	28	96551965	97769915	96551967	97769903	96551964	96551966
	160	28	96551965	97769915	96551967	97769903	96551964	96551966
80-50-	200	28	96551965	97769915	96551967	97769903	96551964	96551966
	250	38	96551960	97769917	96551962	97769905	96551929	96551961
	315	38	96551960	97769917	96551962	97769905	96551929	96551961
100-80-	125	28	96551965	97769915	96551967	97769903	96551964	96551966
	160	38	96551960	97769917	96551962	97769905	96551929	96551961
100-65-	200	38	96551960	97769917	96551962	97769905	96551929	96551961
	250	38	96551960	97769917	96551962	97769905	96551929	96551961
	315	48	96658799	97685504	96658800	97685501	96658797	96658798
125-80-	160	38	96551960	97769917	96551962	97769905	96551929	96551961
	200	38	96551960	97769917	96551962	97769905	96551929	96551961
	250	38	96551960	97769917	96551962	97769905	96551929	96551961
	315	48	96658799	97685504	96658800	97685501	96658797	96658798
	400.1	48	96658799	97685504	96658800	97685501	96658797	96658798
	400	48	96658799	97685504	96658800	97685501	96658797	96658798
	400 4)	55	96658810	97685588	96658811	97685584	96658808	96658809

Pump type		Shaft seal dia.	AQQE	AQQK	AQQV	AQQX	AQAE	AQAV
			M7N	M7N	M7N	M7N	M7N	M7N
125-100-	160	38	*96551960*	*97769917*	*96551962*	*97769905*	*96551929*	*96551961*
	200	38	*96551960*	*97769917*	*96551962*	*97769905*	*96551929*	*96551961*
	250	48	*96658799*	*97685504*	*96658800*	*97685501*	*96658797*	*96658798*
	315	48	*96658799*	*97685504*	*96658800*	*97685501*	*96658797*	*96658798*
	400	48	*96658799*	*97685504*	*96658800*	*97685501*	*96658797*	*96658798*
150-125-	200	38	*96551960*	*97769917*	*96551962*	*97769905*	*96551929*	*96551961*
	250	48	*96658799*	*97685504*	*96658800*	*97685501*	*96658797*	*96658798*
	315	48	*96658799*	*97685504*	*96658800*	*97685501*	*96658797*	*96658798*
	400	48	*96658799*	*97685504*	*96658800*	*97685501*	*96658797*	*96658798*
	500	60	*96658823*	*97685590*	*96658824*	*97685586*	*96658821*	*96658822*
200-150-	200	38	*96551960*	*97769917*	*96551962*	*97769905*	*96551929*	*96551961*
	250	48	*96658799*	*97685504*	*96658800*	*97685501*	*96658797*	*96658798*
	315.1	55	*96658810*	*97685588*	*96658811*	*97685584*	*96658808*	*96658809*
	315.2	55	*96658810*	*97685588*	*96658811*	*97685584*	*96658808*	*96658809*
	315	55	*96658810*	*97685588*	*96658811*	*97685584*	*96658808*	*96658809*
	400	55	*96658810*	*97685588*	*96658811*	*97685584*	*96658808*	*96658809*
	500	60	*96658823*	*97685590*	*96658824*	*97685586*	*96658821*	*96658822*
250-200-	400	55	*96658810*	*97685588*	*96658811*	*97685584*	*96658808*	*96658809*
	450	55	*96658810*	*97685588*	*96658811*	*97685584*	*96658808*	*96658809*
300-250-	350	55	*96658810*	*97685588*	*96658811*	*97685584*	*96658808*	*96658809*
	400	55	*96658810*	*97685588*	*96658811*	*97685584*	*96658808*	*96658809*
	450	60	*96658823*	*97685590*	*96658824*	*97685586*	*96658821*	*96658822*
	500	60	*96658823*	*97685590*	*96658824*	*97685586*	*96658821*	*96658822*

4) For 2-pole model only.

Shaft seal

Material code: L, R

The material code can be found in the type designation on the nameplate

NBG 50-32-125.1/140 A-F-L-BAQE

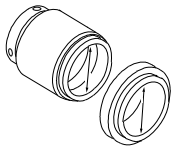

Shaft seal diameter

Pump type		Shaft seal dia.	BAQE	BAQV	BQQE	BQQV	BQQV [1]	BBQE	BBQV	BQBE
			MG13	MG13	MG13	MG13	MG13	MG13	MG13	RMG13
50-32-	125.1	28	96658825	96658827	96658826	96658828	98670804	96658829	97769886	96658830
	160.1	28	96658825	96658827	96658826	96658828	98670804	96658829	97769886	96658830
	200.1	28	96658825	96658827	96658826	96658828	98670804	96658829	97769886	96658830
	125	28	96658825	96658827	96658826	96658828	98670804	96658829	97769886	96658830
	160	28	96658825	96658827	96658826	96658828	98670804	96658829	97769886	96658830
	200	28	96658825	96658827	96658826	96658828	98670804	96658829	97769886	96658830
	250	38	96658836	96658838	96658837	96658839	98670805	96658850	97769888	96658851
65-50-	125	28	96658825	96658827	96658826	96658828	98670804	96658829	97769886	96658830
	160	28	96658825	96658827	96658826	96658828	98670804	96658829	97769886	96658830
65-40-	200	28	96658825	96658827	96658826	96658828	98670804	96658829	97769886	96658830
	250	38	96658836	96658838	96658837	96658839	98670805	96658850	97769888	96658851
	315	38	96658836	96658838	96658837	96658839	98670805	96658850	97769888	96658851
80-65-	125	28	96658825	96658827	96658826	96658828	98670804	96658829	97769886	96658830
	160	28	96658825	96658827	96658826	96658828	98670804	96658829	97769886	96658830
80-50-	200	28	96658825	96658827	96658826	96658828	98670804	96658829	97769886	96658830
	250	38	96658836	96658838	96658837	96658839	98670805	96658850	97769888	96658851
	315	38	96658836	96658838	96658837	96658839	98670805	96658850	97769888	96658851
100-80-	125	28	96658825	96658827	96658826	96658828	98670804	96658829	97769886	96658830
	160	38	96658836	96658838	96658837	96658839	98670805	96658850	97769888	96658851
100-65-	200	38	96658836	96658838	96658837	96658839	98670805	96658850	97769888	96658851
	250	38	96658836	96658838	96658837	96658839	98670805	96658850	97769888	96658851
	315	48	96658857	96658860	96658858	96658861	98670806	96658862	97769890	-
125-80-	160	38	96658836	96658838	96658837	96658839	98670805	96658850	97769888	96658851
	200	38	96658836	96658838	96658837	96658839	98670805	96658850	97769888	96658851
	250	38	96658836	96658838	96658837	96658839	98670805	96658850	97769888	96658851
	315	48	96658857	96658860	96658858	96658861	98670806	96658862	97769890	-
	400.1	48	96658857	96658860	96658858	96658861	98670806	96658862	97769890	-
	400	48	96658857	96658860	96658858	96658861	98670806	96658862	97769890	-
	400 [2]	55	97769919	97769921	97769927	97769929	98670807	97769931	97769892	-
125-100-	160	38	96658836	96658838	96658837	96658839	98670805	96658850	97769888	96658851
	200	38	96658836	96658838	96658837	96658839	98670805	96658850	97769888	96658851
	250	48	96658857	96658860	96658858	96658861	98670806	96658862	97769890	-
	315	48	96658857	96658860	96658858	96658861	98670806	96658862	97769890	-
	400	48	96658857	96658860	96658858	96658861	98670806	96658862	97769890	-
150-125-	200	38	96658836	96658838	96658837	96658839	98670805	96658850	97769888	96658851
	250	48	96658857	96658860	96658858	96658861	98670806	96658862	97769890	-
	315	48	96658857	96658860	96658858	96658861	98670806	96658862	97769890	-
	400	48	96658857	96658860	96658858	96658861	98670806	96658862	97769890	-
	500	60	97769920	97769922	97769928	97769930	98670808	97769932	97769894	-

Pump type		Shaft seal dia.	BAQE	BAQV	BQQE	BQQV	BQQV[1]	BBQE	BBQV	BQBE
			MG13	MG13	MG13	MG13	MG13	MG13	MG13	RMG13
200-150-	200	38	*96658836*	*96658838*	*96658837*	*96658839*	*98670805*	*96658850*	*97769888*	*96658851*
	250	48	*96658857*	*96658860*	*96658858*	*96658861*	*98670806*	*96658862*	*97769890*	-
	315.1	55	*97769919*	*97769921*	*97769927*	*97769929*	*98670807*	*97769931*	*97769892*	-
	315.2	55	*97769919*	*97769921*	*97769927*	*97769929*	*98670807*	*97769931*	*97769892*	-
	315	55	*97769919*	*97769921*	*97769927*	*97769929*	*98670807*	*97769931*	*97769892*	-
	400	55	*97769919*	*97769921*	*97769927*	*97769929*	*98670807*	*97769931*	*97769892*	-
	500	60	*97769920*	*97769922*	*97769928*	*97769930*	*98670808*	*97769932*	*97769894*	-
250-200-	400	55	-	-	-	-	-	-	-	-
	450	55	-	-	-	-	-	-	-	-
300-250-	350	55	-	-	-	-	-	-	-	-
	400	55	-	-	-	-	-	-	-	-
	450	60	-	-	-	-	-	-	-	-
	500	60	-	-	-	-	-	-	-	-

1) PWIS-free shaft seal.

2) For 2-pole model only.

Pump type		Shaft seal dia.	GQQE	GQQV	DAQF	DQQE	DQQK	DQQV	DQQX
			MG13S	MG13S	HJ92N	HJ977GN	HJ977GN	HJ977GN	HJ977GN
50-32-	125.1	28	-	-	*96658831*	*97769896*	*97769912*	*97769900*	*97769908*
	160.1	28	-	-	*96658831*	*97769896*	*97769912*	*97769900*	*97769908*
	200.1	28	-	-	*96658831*	*97769896*	*97769912*	*97769900*	*97769908*
	125	28	-	-	*96658831*	*97769896*	*97769912*	*97769900*	*97769908*
	160	28	-	-	*96658831*	*97769896*	*97769912*	*97769900*	*97769908*
	200	28	-	-	*96658831*	*97769896*	*97769912*	*97769900*	*97769908*
	250	38	-	-	*96658852*	*97769898*	*97769914*	*97769902*	*97769910*
65-50-	125	28	-	-	*96658831*	*97769896*	*97769912*	*97769900*	*97769908*
	160	28	-	-	*96658831*	*97769896*	*97769912*	*97769900*	*97769908*
65-40-	200	28	-	-	*96658831*	*97769896*	*97769912*	*97769900*	*97769908*
	250	38	-	-	*96658852*	*97769898*	*97769914*	*97769902*	*97769910*
	315	38	-	-	*96658852*	*97769898*	*97769914*	*97769902*	*97769910*
80-65-	125	28	-	-	*96658831*	*97769896*	*97769912*	*97769900*	*97769908*
	160	28	-	-	*96658831*	*97769896*	*97769912*	*97769900*	*97769908*
80-50-	200	28	-	-	*96658831*	*97769896*	*97769912*	*97769900*	*97769908*
	250	38	-	-	*96658852*	*97769898*	*97769914*	*97769902*	*97769910*
	315	38	-	-	*96658852*	*97769898*	*97769914*	*97769902*	*97769910*
100-80-	125	28	-	-	*96658831*	*97769896*	*97769912*	*97769900*	*97769908*
	160	38	-	-	*96658852*	*97769898*	*97769914*	*97769902*	*97769910*
100-65-	200	38	-	-	*96658852*	*97769898*	*97769914*	*97769902*	*97769910*
	250	38	-	-	*96658852*	*97769898*	*97769914*	*97769902*	*97769910*
	315	48	-	-	*96658863*	*97685510*	*97685518*	*97685513*	*97685515*
125-80-	160	38	-	-	*96658852*	*97769898*	*97769914*	*97769902*	*97769910*
	200	38	-	-	*96658852*	*97769898*	*97769914*	*97769902*	*97769910*
	250	38	-	-	*96658852*	*97769898*	*97769914*	*97769902*	*97769910*
	315	48	-	-	*96658863*	*97685510*	*97685518*	*97685513*	*97685515*
	400.1	48	-	-	*96658863*	*97685510*	*97685518*	*97685513*	*97685515*
	400	48	-	-	*96658863*	*97685510*	*97685518*	*97685513*	*97685515*
	400[3]	55	-	-	*97536552*	*97685597*	*97685609*	*97685601*	*97685605*
125-100-	160	38	-	-	*96658852*	*97769898*	*97769914*	*97769902*	*97769910*
	200	38	-	-	*96658852*	*97769898*	*97769914*	*97769902*	*97769910*
	250	48	-	-	*96658863*	*97685510*	*97685518*	*97685513*	*97685515*
	315	48	-	-	*96658863*	*97685510*	*97685518*	*97685513*	*97685515*
	400	48	-	-	*96658863*	*97685510*	*97685518*	*97685513*	*97685515*

Pump type		Shaft seal dia.	GQQE	GQQV	DAQF	DQQE	DQQK	DQQV	DQQX
			MG13S	MG13S	HJ92N	HJ977GN	HJ977GN	HJ977GN	HJ977GN
150-125-	200	38	-	-	96658852	97769898	97769914	97769902	97769910
	250	48	-	-	96658863	97685510	97685518	97685513	97685515
	315	48	-	-	96658863	97685510	97685518	97685513	97685515
	400	48	-	-	96658863	97685510	97685518	97685513	97685515
	500	60	-	-	97536595	97685599	97685611	97685603	97685607
200-150-	200	38	-	-	96658852	97769898	97769914	97769902	97769910
	250	48	-	-	96658863	97685510	97685518	97685513	97685515
	315.1	55	-	-	97536552	97685597	97685609	97685601	97685605
	315.2	55	-	-	97536552	97685597	97685609	97685601	97685605
	315	55	-	-	97536552	97685597	97685609	97685601	97685605
	400	55	-	-	97536552	97685597	97685609	97685601	97685605
	500	60	-	-	97536595	97685599	97685611	97685603	97685607
250-200-	400	55	-	-	-	-	-	-	-
	450	55	-	-	-	-	-	-	-
300-250-	350	55	-	-	-	-	-	-	-
	400	55	-	-	-	-	-	-	-
	450	60	-	-	-	-	-	-	-
	500	60	-	-	-	-	-	-	-

3) For 2-pole model only.

Pump type		Shaft seal dia.	AQQE	AQQK	AQQV	AQQX	AQAE	AQAV
			M7N	M7N	M7N	M7N	M7N	M7N
50-32-	125.1	28	96658834	97769916	96658835	97769904	96658832	96658833
	160.1	28	96658834	97769916	96658835	97769904	96658832	96658833
	200.1	28	96658834	97769916	96658835	97769904	96658832	96658833
	125	28	96658834	97769916	96658835	97769904	96658832	96658833
	160	28	96658834	97769916	96658835	97769904	96658832	96658833
	200	28	96658834	97769916	96658835	97769904	96658832	96658833
	250	38	96658855	97769918	96658856	97769906	96658853	96658854
65-50-	125	28	96658834	97769916	96658835	97769904	96658832	96658833
	160	28	96658834	97769916	96658835	97769904	96658832	96658833
65-40-	200	28	96658834	97769916	96658835	97769904	96658832	96658833
	250	38	96658855	97769918	96658856	97769906	96658853	96658854
	315	38	96658855	97769918	96658856	97769906	96658853	96658854
80-65-	125	28	96658834	97769916	96658835	97769904	96658832	96658833
	160	28	96658834	97769916	96658835	97769904	96658832	96658833
80-50-	200	28	96658834	97769916	96658835	97769904	96658832	96658833
	250	38	96658855	97769918	96658856	97769906	96658853	96658854
	315	38	96658855	97769918	96658856	97769906	96658853	96658854
100-80-	125	28	96658834	97769916	96658835	97769904	96658832	96658833
	160	38	96658855	97769918	96658856	97769906	96658853	96658854
100-65-	200	38	96658855	97769918	96658856	97769906	96658853	96658854
	250	38	96658855	97769918	96658856	97769906	96658853	96658854
	315	48	96658866	97685505	96658867	97685502	96658864	96658865
125-80-	160	38	96658855	97769918	96658856	97769906	96658853	96658854
	200	38	96658855	97769918	96658856	97769906	96658853	96658854
	250	38	96658855	97769918	96658856	97769906	96658853	96658854
	315	48	96658866	97685505	96658867	97685502	96658864	96658865
	400.1	48	96658866	97685505	96658867	97685502	96658864	96658865
	400	48	96658866	97685505	96658867	97685502	96658864	96658865
	400 4)	55	97536543	97685589	97536544	97685585	97769923	97769925

Pump type		Shaft seal dia.	AQQE	AQQK	AQQV	AQQX	AQAE	AQAV
			M7N	M7N	M7N	M7N	M7N	M7N
125-100-	160	38	*96658855*	*97769918*	*96658856*	*97769906*	*96658853*	*96658854*
	200	38	*96658855*	*97769918*	*96658856*	*97769906*	*96658853*	*96658854*
	250	48	*96658866*	*97685505*	*96658867*	*97685502*	*96658864*	*96658865*
	315	48	*96658866*	*97685505*	*96658867*	*97685502*	*96658864*	*96658865*
	400	48	*96658866*	*97685505*	*96658867*	*97685502*	*96658864*	*96658865*
150-125-	200	38	*96658855*	*97769918*	*96658856*	*97769906*	*96658853*	*96658854*
	250	48	*96658866*	*97685505*	*96658867*	*97685502*	*96658864*	*96658865*
	315	48	*96658866*	*97685505*	*96658867*	*97685502*	*96658864*	*96658865*
	400	48	*96658866*	*97685505*	*96658867*	*97685502*	*96658864*	*96658865*
	500	60	*97536585*	*97685591*	*97536586*	*97685587*	*97769924*	*97769926*
200-150-	200	38	*96658855*	*97769918*	*96658856*	*97769906*	*96658853*	*96658854*
	250	48	*96658866*	*97685505*	*96658867*	*97685502*	*96658864*	*96658865*
	315.1	55	*97536543*	*97685589*	*97536544*	*97685585*	*97769923*	*97769925*
	315.2	55	*97536543*	*97685589*	*97536544*	*97685585*	*97769923*	*97769925*
	315	55	*97536543*	*97685589*	*97536544*	*97685585*	*97769923*	*97769925*
	400	55	*97536543*	*97685589*	*97536544*	*97685585*	*97769923*	*97769925*
	500	60	*97536585*	*97685591*	*97536586*	*97685587*	*97769924*	*97769926*
250-200-	400	55	-	-	-	-	-	-
	450	55	-	-	-	-	-	-
300-250-	350	55	-	-	-	-	-	-
	400	55	-	-	-	-	-	-
	450	60	-	-	-	-	-	-
	500	60	-	-	-	-	-	-

4) For 2-pole model only.

Spacer ring for shaft seal (pos. 105b and 105c)

28, 48, 55 and 60 mm	38 mm	
	Design 1	Design 2
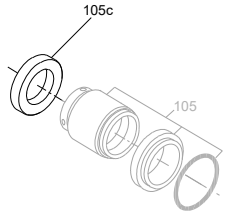	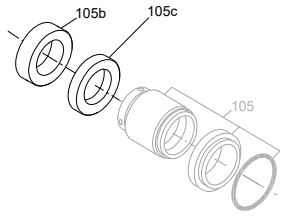	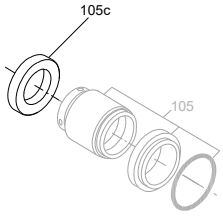
HJ92N, M7N	*HJ92N, M7N, HJ977GN*	*HJ92N, M7N, HJ977GN*
	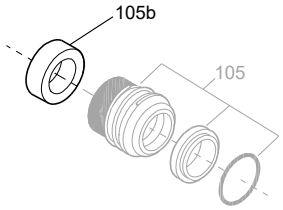	
	MG13 RMG13	

Spacer ring

Pos.	Shaft seal diameter [mm]	Description	Length [mm]	Material code	
				A, B, C, D, E, F, G, H, K, M, N, P, S	I, J, L, R, T, U, W
105b	38	Spacer ring	15.5	*96591277*	*96938601*
105c	28		7.5	*96938597*	*96938598*
	38		10	*96938599*	*96938600*
	48		15	*96938602*	*96938603*
	55		22.5	*96938604*	*96938605*
	60		17.5	*96938606*	*96938607*
105b and 1050c	38		15.5	*96930797*	*96930799*
			10		

38 mm spacer ring			
Pump type		Shaft seal dia.	Design
50-32-	125.1	28	-
	160.1	28	-
	200.1	28	-
	125	28	-
	160	28	-
	200	28	-
	250	38	2
65-50-	125	28	-
	160	28	-
65-40-	200	28	-
	250	38	2
	315	38	2
80-65-	125	28	-
	160	28	-
80-50-	200	28	-
	250	38	2
	315	38	1
100-80-	125	28	-
	160	38	2
100-65-	200	38	2
	250	38	1
	315	48	-
125-80-	160	38	2
	200	38	1
	250	38	1
	315	48	-
	400	48	-
125-100-	160	38	2
	200	38	1
	250	48	-
	315	48	-
	400	48	-
150-125-	200	38	1
	250	48	-
	315	48	-
	400	48	-
	500	60	-
200-150-	200	38	1
	250	48	-
	315.1	48/55	-
	315.2	48/55	-
	315	55	-
	400	55	-
	500	60	-
250-200-	400	48	-
	450	48	-
300-250-	350	48	-
	400	48	-
	450	60	-
	500	60	-

O-ring

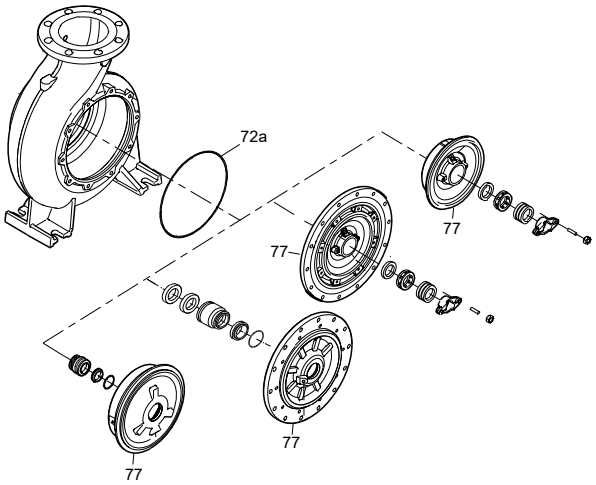

TM047046

O-ring	
Pos.	**Content**
72a	1 x O-ring

NK 32-125.1/142 A1-F-L-BAQE

The O-ring materials can be found in the type designation on the nameplate.

Code	Material
E	EPDM
M	FEPS
K	FFKM
V	FKM
F	FXM
X	HNBR

Pump type		O-ring kit 1 (pos. 72a)					
		E (EPDM)	M (FEPS)	K (FFKM)	V (FKM)	F (FXM)	X (HNBR)
50-32-	125.1	97757659	97904673	97904674	97757697	97790022	97904675
	160.1	97757659	97904673	97904674	97757697	97790022	97904675
	200.1	97757671	97904679	97904691	97757698	97790080	97904692
	125	97757659	97904673	97904674	97757697	97790022	97904675
	160	97757659	97904673	97904674	97757697	97790022	97904675
	200	97757671	97904679	97904691	97757698	97790080	97904692
	250	97757672	97904676	97904677	97757699	97790081	97904678
65-50-	125	97757659	97904673	97904674	97757697	97790022	97904675
	160	97757659	97904673	97904674	97757697	97790022	97904675
65-40-	200	97757671	97904679	97904691	97757698	97790080	97904692
	250	97757672	97904676	97904677	97757699	97790081	97904678
	315	97757675	96887770	96887761	97757705	96887764	96887767
80-65-	125	97757659	97904673	97904674	97757697	97790022	97904675
	160	97757659	97904673	97904674	97757697	97790022	97904675
80-50-	200	97757671	97904679	97904691	97757698	97790080	97904692
	250	97757672	97904676	97904677	97757699	97790081	97904678
	315	97757675	96887770	96887761	97757705	96887764	96887767
100-80-	125	97757659	97904673	97904674	97757697	97790022	97904675
	160	97757659	97904673	97904674	97757697	97790022	97904675
100-65-	200	97757671	97904679	97904691	97757698	97790080	97904692
	250	97757673	96887769	96887760	97757703	96887763	96887766
	315	97757675	96887770	96887761	97757705	96887764	96887767
125-80-	160	97757659	97904673	97904674	97757697	97790022	97904675
	200	97757671	97904679	97904691	97757698	97790080	97904692
	250	97757673	96887769	96887760	97757703	96887763	96887766
	315	97757675	96887770	96887761	97757705	96887764	96887767
	400	97757676	96887771	96887762	97757707	96887765	96887768
125-100-	160	97757659	97904673	97904674	97757697	97790022	97904675
	200	97757671	97904679	97904691	97757698	97790080	97904692
	250	97757673	96887769	96887760	97757703	96887763	96887766
	315	97757675	96887770	96887761	97757705	96887764	96887767
	400	97757676	96887771	96887762	97757707	96887765	96887768
150-125-	200	97757671	97904679	97904691	97757698	97790080	97904692
	250	97757673	96887769	96887760	97757703	96887763	96887766
	315	97757675	96887770	96887761	97757705	96887764	96887767
	400	97757676	96887771	96887762	97757707	96887765	96887768
	500	97757679	97536641	97536606	97757712	97536608	97536609
200-150-	200	97757671	97904679	97904691	97757698	97790080	97904692
	250	97757673	96887769	96887760	97757703	96887763	96887766
	315.1	97757675	96887770	96887761	97757705	96887764	96887767
	315.2	97757675	96887770	96887761	97757705	96887764	96887767
	315	97757675	96887770	96887761	97757705	96887764	96887767
	400	97757676	96887771	96887762	97757707	96887765	96887768
	500	97757679	97536641	97536606	97757712	97536608	97536609
250-200-	400	97757676	-	-	97757707	96887765	-
	450	97757677	-	-	97757708	97790102	-
300-250-	350	97757676	-	-	97757707	96887765	-
	400	97757676	-	-	97757707	96887765	-
	450	97757677	-	-	97757708	97790102	-
	500	97757679	-	-	97757712	97536608	-

Shaft

Stub shaft	Pump shaft	Motor bush
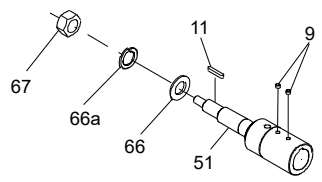	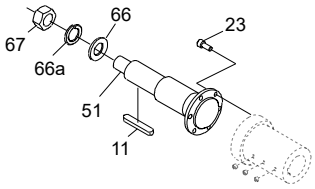	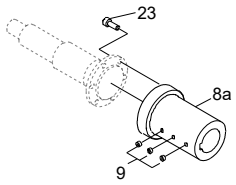
67: 1 x nut 66a: 1 x spring washer 66:1 x washer 11:1 x key 9: 2 x fixing screws 51: 1 x shaft (stub shaft)	67: 1 x nut 66a: 1 x spring washer 66: 1 x washer 11:1 x key 23:6/8 x screws 51: 1 x shaft (split shaft)	9: 2/3 x fixing screw 23:6/8 x screws 8a:1 x motor bush

The material code can be found in the type designation on the nameplate.

NBG 50-32 -125 .1 /142 A -F -A -BAQE

Pump type			Motor					Stub shaft	Split shaft			Motor bush
			Poles	Power [kW]		Frame size	Make	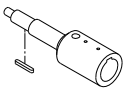	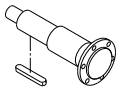			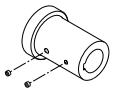
								Material code				
				50 Hz	60 Hz			A, B, C, D, E, F, G, H, S	A, B, C, D, E, F, G, H, S	K, M, N, P	I, J, L, R , T, U, W	
50	32	125	2	1.1	-	90S		96039351	-	96847108	96847110	96810018
50	32	125	2	1.5	1.5	90S		96039351	-	96847108	96847110	96810018
50	32	125	2	2.2	2.2	90L		96039351	-	96847108	96847110	96810018
50	32	125	2	3.0	3.0	100L		96039352	-	96847108	96847110	96810019
50	32	125	2	-	4.0	112M		96039352	-	96847108	96847110	96810019
50	32	125	2	-	5.5	132S		96039353	-	96847108	96847110	96810020
50	32	125	4	0.25	0.25	71A		96039349	-	96847108	96847110	96810016
50	32	125	4	0.37	0.37	71B		96039349	-	96847108	96847110	96810016
50	32	125	4	-	0.55	80A		96039350	-	96847108	96847110	96810017
50	32	125	4	-	0.75	80B		96039350	-	96847108	96847110	96810017
50	32	160	2	2.2	-	90L		96039351	-	96847108	96847110	96810018
50	32	160	2	3.0	3.0	100L		96039352	-	96847108	96847110	96810019
50	32	160	2	4.0	4.0	112M		96039352	-	96847108	96847110	96810019
50	32	160	2	5.5	5.5	132S		96039353	-	96847108	96847110	96810020
50	32	160	2	-	7.5	132S		96039353	-	96847108	96847110	96810020
50	32	160	2	-	11	160M		96039354	-	96847108	96847110	96810021
50	32	160	4	0.25	-	71A		96039349	-	96847108	96847110	96810016
50	32	160	4	0.37	0.37	71B		96039349	-	96847108	96847110	96810016
50	32	160	4	0.55	0.55	80A		96039350	-	96847108	96847110	96810017
50	32	160	4	0.75	0.75	80B		96039350	-	96847108	96847110	96810017
50	32	160	4	-	1.1	90S		96039351	-	96847108	96847110	96810018
50	32	200	2	4.0	-	112M		96039352	-	96847108	96847110	96810019
50	32	200	2	5.5	5.5	132S		96039353	-	96847108	96847110	96810020
50	32	200	2	7.5	7.5	132S		96039353	-	96847108	96847110	96810020
50	32	200	2	-	15	160M		96039354	-	96847108	96847110	96810021
50	32	200	2	-	18.5	160L		96039354	-	96847108	96847110	96810021
50	32	200	2	11	11	160M		96039354	-	96847108	96847110	96810021
50	32	200	4	0.55	-	80A		96039350	-	96847108	96847110	96810017
50	32	200	4	0.75	0.75	80B		96039350	-	96847108	96847110	96810017

Pump type			Motor					Stub shaft	Split shaft			Motor bush
			Poles	Power [kW]		Frame size	Make	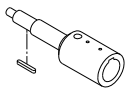	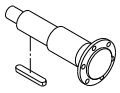			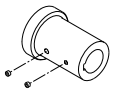
								Material code				
				50 Hz	60 Hz			A, B, C, D, E, F, G, H, S	A, B, C, D, E, F, G, H, S	K, M, N, P	I, J, L, R , T, U, W	
50	32	200	4	1.1	1.1	90S		96039351	-	96847108	96847110	96810018
50	32	200	4	1.5	1.5	90L		96039351	-	96847108	96847110	96810018
50	32	200	4	-	2.2	100L		96039352	-	96847108	96847110	96810019
50	32	250	2	5.5	5.5	132S		-	96847113	96847113	96847114	96810020
50	32	250	2	7.5	7.5	132S		-	96847113	96847113	96847114	96810020
50	32	250	2	-	18.5	160L		-	96847113	96847113	96847114	96810021
50	32	250	2	11.0	11	160M		-	96847113	96847113	96847114	96810021
50	32	250	2	15.0	15	160M		-	96847113	96847113	96847114	96810021
50	32	250	2	-	22	180M		-	96847113	96847113	96847114	96306481
50	32	250	2	-	30	200L		-	96847113	96847113	96847114	96306482
50	32	250	4	0.75	-	80B		-	96847113	96847113	96847114	96810017
50	32	250	4	1.1	1.1	90S		-	96847113	96847113	96847114	96810018
50	32	250	4	1.5	1.5	90L		-	96847113	96847113	96847114	96810018
50	32	250	4	2.2	2.2	100L		-	96847113	96847113	96847114	96810019
50	32	250	4	-	3.0	100L		-	96847113	96847113	96847114	96810019
50	32	125.1	2	0.75	-	80A		96039350	-	96847108	96847110	96810017
50	32	125.1	2	1.1	1.1	90S		96039351	-	96847108	96847110	96810018
50	32	125.1	2	1.5	1.5	90S		96039351	-	96847108	96847110	96810018
50	32	125.1	2	2.2	2.2	90L		96039351	-	96847108	96847110	96810018
50	32	125.1	2	-	3.0	100L		96039352	-	96847108	96847110	96810019
50	32	125.1	2	-	4.0	112M		96039352	-	96847108	96847110	96810019
50	32	125.1	4	0.25	0.25	71A		96039349	-	96847108	96847110	96810016
50	32	125.1	4	0.37	0.37	71B		96039349	-	96847108	96847110	96810016
50	32	125.1	4	-	0.55	80A		96039350	-	96847108	96847110	96810017
50	32	160.1	2	1.5	-	90S		96039351	-	96847108	96847110	96810018
50	32	160.1	2	2.2	2.2	90L		96039351	-	96847108	96847110	96810018
50	32	160.1	2	3.0	3.0	100L		96039352	-	96847108	96847110	96810019
50	32	160.1	2	4.0	4.0	112M		96039352	-	96847108	96847110	96810019
50	32	160.1	2	-	5.5	132S		96039353	-	96847108	96847110	96810020
50	32	160.1	2	-	7.5	132S		96039353	-	96847108	96847110	96810020
50	32	160.1	4	0.25	-	71A		96039349	-	96847108	96847110	96810016
50	32	160.1	4	0.37	0.37	71B		96039349	-	96847108	96847110	96810016
50	32	160.1	4	0.55	0.55	80A		96039350	-	96847108	96847110	96810017
50	32	160.1	4	-	0.75	80B		96039350	-	96847108	96847110	96810017
50	32	200.1	2	3.0	-	100L		96039352	-	96847108	96847110	96810019
50	32	200.1	2	4.0	4.0	112M		96039352	-	96847108	96847110	96810019
50	32	200.1	2	5.5	5.5	132S		96039353	-	96847108	96847110	96810020
50	32	200.1	2	7.5	7.5	132S		96039353	-	96847108	96847110	96810020
50	32	200.1	2	-	11	160M		96039354	-	96847108	96847110	96810021
50	32	200.1	4	0.37	-	71B		-	96847108	96847108	96847110	96810016
50	32	200.1	4	0.55	0.55	80A		96039350	-	96847108	96847110	96810017
50	32	200.1	4	0.75	0.75	80B		96039350	-	96847108	96847110	96810017
50	32	200.1	4	-	1.1	90S		96039351	-	96847108	96847110	96810018
50	32	200.1	4	-	1.5	90L		96039351	-	96847108	96847110	96810018
65	40	200	2	5.5	-	132S		96039353	-	96847108	96847110	96810020
65	40	200	2	7.5	-	132S		96039353	-	96847108	96847110	96810020
65	40	200	2	11.0	11	160M		96039354	-	96847108	96847110	96810021
65	40	200	2	15.0	15	160M		96039354	-	96847108	96847110	96810021
65	40	200	2	-	18.5	160L		96039354	-	96847108	96847110	96810021

Pump type			Motor					Stub shaft	Split shaft			Motor bush
			Poles	Power [kW]		Frame size	Make	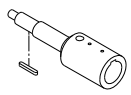	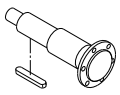			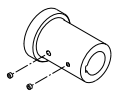
								Material code				
				50 Hz	60 Hz			A, B, C, D, E, F, G, H, S	A, B, C, D, E, F, G, H, S	K, M, N, P	I, J, L, R , T, U, W	
65	40	200	2	-	22	180M		96039355	-	96847108	96847110	96306481
65	40	200	2	-	30	200L		96039356	-	96847108	96847110	96306482
65	40	200	4	0.75	-	80B		96039350	-	96847108	96847110	96810017
65	40	200	4	1.1	1.1	90S		96039351	-	96847108	96847110	96810018
65	40	200	4	1.5	1.5	90L		96039351	-	96847108	96847110	96810018
65	40	200	4	2.2	2.2	100L		96039352	-	96847108	96847110	96810019
65	40	200	4	-	3.0	100L		96039352	-	96847108	96847110	96810019
65	40	250	2	11.0	-	160M		-	96847113	96847113	96847114	96810021
65	40	250	2	15.0	15	160M		-	96847113	96847113	96847114	96810021
65	40	250	2	18.5	18.5	160L		-	96847113	96847113	96847114	96810021
65	40	250	2	22	22	180M		-	96847113	96847113	96847114	96306481
65	40	250	2	30	30	200L		-	96847113	96847113	96847114	96306482
65	40	250	2	-	37	200L		-	96847113	96847113	96847114	96306482
65	40	250	4	1.5	-	90L		-	96847113	96847113	96847114	96810018
65	40	250	4	2.2	2.2	100L		-	96847113	96847113	96847114	96810019
65	40	250	4	3.0	3.0	100L		-	96847113	96847113	96847114	96810019
65	40	250	4	-	4.0	112M		-	96847113	96847113	96847114	96810019
65	40	250	4	-	5.5	132S		-	96847113	96847113	96847114	96810020
65	40	315	2	22	-	180M		96039360	-	96847117	96847118	96306481
65	40	315	2	30	-	200L		96039361	-	96847117	96847118	96306482
65	40	315	2	37	37	200L		96039361	-	96847117	96847118	96306482
65	40	315	2	45	45	225M		96537610	-	96847117	96847118	96810022
65	40	315	2	-	55	250M		-	-	96847117	96847118	96306483
65	40	315	2	-	75	280S		-	-	96847117	96847118	96306484
65	40	315	2	-	90	280M		-	-	96847117	96847118	96306484
65	40	315	4	3.0	-	100L		-	96847117	96847117	96847118	96810019
65	40	315	4	4.0	-	112M		-	96847117	96847117	96847118	96810019
65	40	315	4	5.5	5.5	132S		96039358	-	96847117	96847118	96810020
65	40	315	4	7.5	7.5	132S		96039358	-	96847117	96847118	96810020
65	40	315	4	-	11	160M		96039359	-	96847117	96847118	96810021
65	50	125	2	1.5	-	90S		96039351	-	96847108	96847110	96810018
65	50	125	2	2.2	-	90L		96039351	-	96847108	96847110	96810018
65	50	125	2	3.0	3.0	100L		96039352	-	96847108	96847110	96810019
65	50	125	2	4.0	4.0	112M		96039352	-	96847108	96847110	96810019
65	50	125	2	5.5	5.5	132S		96039353	-	96847108	96847110	96810020
65	50	125	2	-	7.5	132S		96039353	-	96847108	96847110	96810020
65	50	125	2	-	11	160M		96039354	-	96847108	96847110	96810021
65	50	125	4	0.25	-	71A		96039349	-	96847108	96847110	96810016
65	50	125	4	0.37	0.37	71B		96039349	-	96847108	96847110	96810016
65	50	125	4	0.55	0.55	80A		96039350	-	96847108	96847110	96810017
65	50	125	4	-	0.75	80B		96039350	-	96847108	96847110	96810017
65	50	125	4	-	1.1	90S		96039351	-	96847108	96847110	96810018
65	50	160	2	4.0	-	112M		96039352	-	96847108	96847110	96810019
65	50	160	2	5.5	5.5	132S		96039353	-	96847108	96847110	96810020
65	50	160	2	7.5	7.5	132S		96039353	-	96847108	96847110	96810020
65	50	160	2	11.0	11	160M		96039354	-	96847108	96847110	96810021
65	50	160	2	-	15	160M		96039354	-	96847108	96847110	96810021
65	50	160	4	0.37		71B		96039349	-	96847108	96847110	96810016
65	50	160	4	0.55	0.55	80A		96039350	-	96847108	96847110	96810017

Pump type			Motor				Stub shaft	Split shaft			Motor bush
			Poles	Power [kW]		Frame size	Make	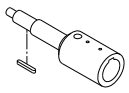	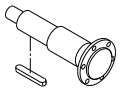		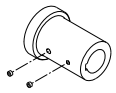
								Material code			
				50 Hz	60 Hz			A, B, C, D, E, F, G, H, S	A, B, C, D, E, F, G, H, S	K, M, N, P	I, J, L, R , T, U, W
65	50	160	4	0.75	0.75	80B	96039350	-	96847108	96847110	96810017
65	50	160	4	1.1	1.1	90S	96039351	-	96847108	96847110	96810018
65	50	160	4	-	1.5	90L	96039351	-	96847108	96847110	96810018
65	50	160	4	-	2.2	100L	96039352	-	96847108	96847110	96810019
80	50	200	2	11.0	-	160M	96039354	-	96847108	96847110	96810021
80	50	200	2	15.0	15	160M	96039354	-	96847108	96847110	96810021
80	50	200	2	18.5	18.5	160L	96039354	-	96847108	96847110	96810021
80	50	200	2	22	22	180M	96039355	-	96847108	96847110	96306481
80	50	200	2	-	30	200L	96039356	-	96847108	96847110	96306482
80	50	200	2	-	37	200L	96039356	-	96847108	96847110	96306482
80	50	200	4	1.1	-	90S	96039351	-	96847108	96847110	96810018
80	50	200	4	1.5	-	90L	96039351	-	96847108	96847110	96810018
80	50	200	4	2.2	2.2	100L	96039352	-	96847108	96847110	96810019
80	50	200	4	3.0	3.0	100L	96039352	-	96847108	96847110	96810019
80	50	200	4	-	4.0	112M	96039352	-	96847108	96847110	96810019
80	50	200	4	-	5.5	132S	96039353	-	96847108	96847110	96810020
80	50	250	2	15.0	-	160M	-	96847113	96847113	96847114	96810021
80	50	250	2	18.5	-	160L	-	96847113	96847113	96847114	96810021
80	50	250	2	22	-	180M	-	96847113	96847113	96847114	96306481
80	50	250	2	30	30	200L	-	96847113	96847113	96847114	96306482
80	50	250	2	37	37	200L	-	96847113	96847113	96847114	96306482
80	50	250	4	2.2	-	100L	-	96847113	96847113	96847114	96810019
80	50	250	4	3.0	-	100L	-	96847113	96847113	96847114	96810019
80	50	250	4	4.0	4.0	112M	-	96847113	96847113	96847114	96810019
80	50	250	4	-	5.5	132S	-	96847113	96847113	96847114	96810020
80	50	250	4	-	7.5	132M	-	96847113	96847113	96847114	96810020
80	50	315	2	30	-	200L	96039361	-	96847117	96847118	96306482
80	50	315	2	37	-	200L	96039361	-	96847117	96847118	96306482
80	50	315	2	45	-	225M	96537610	-	96847117	96847118	96810022
80	50	315	2	55	-	250M	-	96847121	96847121	96847123	96306483
80	50	315	2	75	75	280S	-	-	96847121	96847123	96306484
80	50	315	2	-	90	280M	-	-	96847121	96847123	96306484
80	50	315	2	-	110	315S	-	-	96847121	96847123	96306484
80	50	315	4	4.0	-	112M	-	96847117	96847117	96847118	96810019
80	50	315	4	5.5	5.5	132S	96039358	-	96847117	96847118	96810020
80	50	315	4	7.5	7.5	132M	96039358	-	96847117	96847118	96810020
80	50	315	4	11	11	160M	96039359	-	96847117	96847118	96810021
80	50	315	4	-	15	160L	96039359	-	96847117	96847118	96810021
80	65	125	2	3.0	-	100L	96039352	-	96847108	96847110	96810019
80	65	125	2	4.0	4.0	112M	96039352	-	96847108	96847110	96810019
80	65	125	2	5.5	5.5	132S	96039353	-	96847108	96847110	96810020
80	65	125	2	7.5	7.5	132S	96039353	-	96847108	96847110	96810020
80	65	125	2	-	11	160M	96039354	-	96847108	96847110	96810021
80	65	125	2	-	15	160M	96039354	-	96847108	96847110	96810021
80	65	125	4	0.37		71B	96039349	-	96847108	96847110	96810016
80	65	125	4	0.55	0.55	80A	96039350	-	96847108	96847110	96810017
80	65	125	4	0.75	0.75	80B	96039350	-	96847108	96847110	96810017
80	65	125	4	1.1	1.1	90S	96039351	-	96847108	96847110	96810018
80	65	125	4	-	1.5	90L	96039351	-	96847108	96847110	96810018

Pump type			Motor					Stub shaft	Split shaft			Motor bush
			Poles	Power [kW]		Frame size	Make	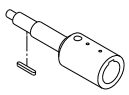	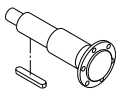			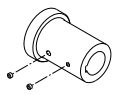
								Material code				
				50 Hz	60 Hz			A, B, C, D, E, F, G, H, S	A, B, C, D, E, F, G, H, S	K, M, N, P	I, J, L, R , T, U, W	
80	65	160	2	5.5	-	132S		96039353	-	96847108	96847110	96810020
80	65	160	2	7.5	7.5	132S		96039353	-	96847108	96847110	96810020
80	65	160	2	11.0	11	160M		96039354	-	96847108	96847110	96810021
80	65	160	2	15.0	15	160M		96039354	-	96847108	96847110	96810021
80	65	160	2	-	18.5	160L		96039354	-	96847108	96847110	96810021
80	65	160	2	-	22	180M		-	96847108	96847108	96847110	96306481
80	65	160	4	0.55	-	80A		96039350	-	96847108	96847110	96810017
80	65	160	4	0.75	-	80B		96039350	-	96847108	96847110	96810017
80	65	160	4	1.1	1.1	90S		96039351	-	96847108	96847110	96810018
80	65	160	4	1.5	1.5	90L		96039351	-	96847108	96847110	96810018
80	65	160	4	2.2	2.2	100L		96039352	-	96847108	96847110	96810019
80	65	160	4	-	3.0	100L		96039352	-	96847108	96847110	96810019
100	65	200	2	11.0	-	160M		-	96847113	96847113	96847114	96810021
100	65	200	2	15.0	-	160M		-	96847113	96847113	96847114	96810021
100	65	200	2	18.5	18.5	160L		-	96847113	96847113	96847114	96810021
100	65	200	2	22	22	180M		-	96847113	96847113	96847114	96306481
100	65	200	2	30	30	200L		-	96847113	96847113	96847114	96306482
100	65	200	2	37	37	200L		-	96847113	96847113	96847114	96306482
100	65	200	4	1.5	-	90L		-	96847113	96847113	96847114	96810018
100	65	200	4	2.2	-	100L		-	96847113	96847113	96847114	96810019
100	65	200	4	3.0	3.0	100L		-	96847113	96847113	96847114	96810019
100	65	200	4	4.0	4.0	112M		-	96847113	96847113	96847114	96810019
100	65	200	4	-	5.5	132S		-	96847113	96847113	96847114	96810020
100	65	200	4	-	7.5	132M		-	96847113	96847113	96847114	96810020
100	65	250	2	30	-	200L		96039361	-	96847117	96847118	96306482
100	65	250	2	37	-	200L		96039361	-	96847117	96847118	96306482
100	65	250	2	45	45	225M		96537610	-	96847117	96847118	96810022
100	65	250	2	55	55	250M		-	96847121	96847121	96847123	96306483
100	65	250	2	75	75	280S		-	96847121	96847121	96847123	96306484
100	65	250	2	-	90	280M		-	96847121	96847121	96847123	96306484
100	65	250	2	-	110	315S		-	96847121	96847121	96847123	96306484
100	65	250	4	3.0	-	100L		96039357	-	96847117	96847118	96810019
100	65	250	4	4.0	-	112M		96039357	-	96847117	96847118	96810019
100	65	250	4	5.5	5.5	132S		96039358	-	96847117	96847118	96810020
100	65	250	4	7.5	7.5	132M		96039358	-	96847117	96847118	96810020
100	65	250	4	-	11	160M		96039359	-	96847117	96847118	96810021
100	65	250	4	-	15	160L		96039359	-	96847117	96847118	96810021
100	65	315	2	55	-	250M		-	96306479	96306479	96847125	96306483
100	65	315	2	75	-	280S		-	96306479	96306479	96847125	96306484
100	65	315	2	90	-	280M		-	96306479	96306479	96847125	96306484
100	65	315	2	110	-	315S		-	96306479	96306479	96847125	96306484
100	65	315	2		132	315M		-	-	96306479	96847125	96306484
100	65	315	2		160	315L		-	-	96306479	96847125	96306484
100	65	315	2		200	315L		-	-	96306479	96847125	96306484
100	65	315	4	5.5	-	132S		-	96306478	96306478	96847124	96810020
100	65	315	4	7.5	7.5	132M		-	96306478	96306478	96847124	96810020
100	65	315	4	11.0	11	160M		-	96306478	96306478	96847124	96810021
100	65	315	4	15.0	15	160L		-	96306478	96306478	96847124	96810021
100	65	315	4	-	18.5	180M		-	96306478	96306478	96847124	96306481

Pump type			Motor					Stub shaft	Split shaft			Motor bush
			Poles	Power [kW]		Frame size	Make	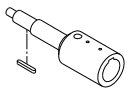	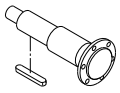			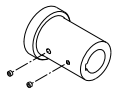
									Material code			
				50 Hz	60 Hz			A, B, C, D, E, F, G, H, S	A, B, C, D, E, F, G, H, S	K, M, N, P	I, J, L, R , T, U, W	
100	65	315	4	-	22	180L		-	96306478	96306478	96847124	96306481
100	80	125	2	4.0	-	112M		96039352	-	96847108	96847110	96810019
100	80	125	2	5.5	-	132S		96039353	-	96847108	96847110	96810020
100	80	125	2	7.5	7.5	132S		96039353	-	96847108	96847110	96810020
100	80	125	2	11	11	160M		96039354	-	96847108	96847110	96810021
100	80	125	2	-	15	160M		96039354	-	96847108	96847110	96810021
100	80	125	2	-	18.5	160L		96039354	-	96847108	96847110	96810021
100	80	125	4	0.55	-	80A		96039350	-	96847108	96847110	96810017
100	80	125	4	0.75	-	80B		96039350	-	96847108	96847110	96810017
100	80	125	4	1.1	1.1	90S		96039351	-	96847108	96847110	96810018
100	80	125	4	-	1.5	90L		96039351	-	96847108	96847110	96810018
100	80	125	4	-	2.2	100L		96039352	-	96847108	96847110	96810019
100	80	160	2	7.5	-	132S		-	96847113	96847113	96847114	96810020
100	80	160	2	11.0	11.0	160M		-	96847113	96847113	96847114	96810021
100	80	160	2	15.0	15.0	160M		-	96847113	96847113	96847114	96810021
100	80	160	2	18.5	18.5	160L		-	96847113	96847113	96847114	96810021
100	80	160	2	-	22	180M		-	96847113	96847113	96847114	96306481
100	80	160	2	-	30	200L		-	96847113	96847113	96847114	96306482
100	80	160	4	0.75		80B		-	96847113	96847113	96847114	96810017
100	80	160	4	1.1	1.1	90S		-	96847113	96847113	96847114	96810018
100	80	160	4	1.5	1.5	90L		-	96847113	96847113	96847114	96810018
100	80	160	4	2.2	2.2	100L		-	96847113	96847113	96847114	96810019
100	80	160	4	-	3.0	100L		-	96847113	96847113	96847114	96810019
100	80	160	4	-	4.0	112M		-	96847113	96847113	96847114	96810019
125	80	160	2	11	-	160M		-	96847113	96847113	96847114	96810021
125	80	160	2	15	-	160M		-	96847113	96847113	96847114	96810021
125	80	160	2	18.5	-	160L		-	96847113	96847113	96847114	96810021
125	80	160	2	22	22	180M		-	96847113	96847113	96847114	96306481
125	80	160	2	30	30	200L		-	96847113	96847113	96847114	96306482
125	80	160	2	-	37	200L		-	96847113	96847113	96847114	96306482
125	80	160	4	1.5	-	90L		-	96847113	96847113	96847114	96810018
125	80	160	4	2.2	-	100L		-	96847113	96847113	96847114	96810019
125	80	160	4	3.0	3.0	100L		-	96847113	96847113	96847114	96810019
125	80	160	4	4.0	4.0	112M		-	96847113	96847113	96847114	96810019
125	80	160	4	-	5.5	132S		-	96847113	96847113	96847114	96810020
125	80	200	2	22	-	180M		96039360	-	96847117	96847118	96306481
125	80	200	2	30	-	200L		96039361	-	96847117	96847118	96306482
125	80	200	2	37	37	200L		96039361	-	96847117	96847118	96306482
125	80	200	2	45	45	225M		96537610	-	96847117	96847118	96810022
125	80	200	2	55	55	250M		-	96847121	96847121	96847123	96306483
125	80	200	2	-	75	280S		-	96847121	96847121	96847123	96306484
125	80	200	2	-	90	280M		-	96847121	96847121	96847123	96306484
125	80	200	4	2.2	-	100L		-	96847117	96847117	96847118	96810019
125	80	200	4	3.0	-	100L		-	96847117	96847117	96847118	96810019
125	80	200	4	4.0	4.0	112M		-	96847117	96847117	96847118	96810019
125	80	200	4	5.5	5.5	132S		96039358	-	96847117	96847118	96810020
125	80	200	4	7.5	7.5	132M		96039358	-	96847117	96847118	96810020
125	80	200	4	-	11	160M		96039359	-	96847117	96847118	96810021
125	80	250	2	45	-	225M		96537610	-	96847117	96847118	96810022

Pump type			Motor					Stub shaft	Split shaft			Motor bush
			Poles	Power [kW]		Frame size	Make	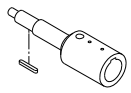	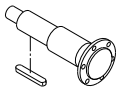			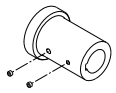
								Material code				
				50 Hz	60 Hz			A, B, C, D, E, F, G, H, S	A, B, C, D, E, F, G, H, S	K, M, N, P	I, J, L, R , T, U, W	
125	80	250	2	55	-	250M		-	96847121	96847121	96847123	96306483
125	80	250	2	75	75	280S		-	96847121	96847121	96847123	96306484
125	80	250	2	90	90	280M		-	96847121	96847121	96847123	96306484
125	80	250	2	-	110	315S		-	96847121	96847121	96847123	96306484
125	80	250	2	-	132	315M		-	96847121	96847121	96847123	96306484
125	80	250	2	-	160	315L		-	96847121	96847121	96847123	96306484
125	80	250	4	5.5	-	132S		96039358	-	96847117	96847118	96810020
125	80	250	4	7.5	7.5	132M		96039358	-	96847117	96847118	96810020
125	80	250	4	11.0	11	160M		96039359	-	96847117	96847118	96810021
125	80	250	4	-	15	160L		96039359	-	96847117	96847118	96810021
125	80	250	4	-	18.5	180M		96039360	-	96847117	96847118	96306481
125	80	315	2	90	-	280M		-	96306479	96306479	96847125	96306484
125	80	315	2	110	-	315S		-	96306479	96306479	96847125	96306484
125	80	315	2	132	132	315M		-	96306479	96306479	96847125	96306484
125	80	315	2	160	160	315L		-	96306479	96306479	96847125	96306484
125	80	315	2	200	200	315L		-	-	96306479	96847125	96306484
125	80	315	4	11.0	-	160M		-	96306478	96306478	96847124	96810021
125	80	315	4	15.0	-	160L		-	96306478	96306478	96847124	96810021
125	80	315	4	18.5	18.5	180M		-	96306478	96306478	96847124	96306481
125	80	315	4	22	22	180L		-	96306478	96306478	96847124	96306481
125	80	315	4	-	30	200L		-	96306478	96306478	96847124	96306482
125	80	315	4	-	37	225S		-	96306479	96306479	96847125	96306483
125	80	315	4	-	45	225M		-	96306479	96306479	96847125	96306483
125	80	400	4	18.5	-	180M		-	96306478	96306478	96847124	96306481
125	80	400	4	22	-	180L		-	96306478	96306478	96847124	96306481
125	80	400	4	30	30	200L		-	96306478	96306478	96847124	96306482
125	80	400	4	37	37	225S		-	96306479	96306479	96847125	96306483
125	80	400	4	45	45	225M		-	96306479	96306479	96847125	96306483
125	80	400	4	-	55	250M	Siemens, MMG-E	-	96306479	96306479	96847125	96306484
125	80	400	4	-	55	250M	MMG-G, EFF1 & EFF2	-	96306479	96306479	96847125	96810023
125	80	400	4	-	75	280S	Siemens, MMG-E	-	96306479	96306479	96847125	96306485
125	80	400	4	-	75	280S	MMG-G, EFF1 & EFF2	-	96306479	96306479	96847125	96810023
125	80	400	4	-	90	280M	Siemens, MMG-E	-	96306479	96306479	96847125	96306485
125	80	400	4	-	90	280M	MMG-G, EFF1 & EFF2	-	96306479	96306479	96847125	96306486
125	80	400.1	2	132	-	315M		-	-	96306479	96847125	96306484
125	80	400.1	2	160	-	315L		-	-	96306479	96847125	96306484
125	80	400.1	2	200	-	315L		-	-	96306479	96847125	96306484
125	100	160	2	22	-	180M		-	96847113	96847113	96847114	96306481
125	100	160	2	30	-	200L		-	96847113	96847113	96847114	96306482
125	100	160	2	37	37	200L		-	96847113	96847113	96847114	96306482
125	100	160	4	2.2	-	100L		-	96847113	96847113	96847114	96810019
125	100	160	4	3.0	-	100L		-	96847113	96847113	96847114	96810019
125	100	160	4	4.0	4.0	112M		-	96847113	96847113	96847114	96810019
125	100	160	4	-	5.5	132S		-	96847113	96847113	96847114	96810020
125	100	160	4	-	7.5	132M		-	96847113	96847113	96847114	96810020
125	100	160	6	0.55	-	80B		-	96847113	96847113	96847114	96810017
125	100	160	6	0.75	-	90S		-	96847113	96847113	96847114	96810018
125	100	160	6	1.1	1.1	90L		-	96847113	96847113	96847114	96810018
125	100	160	6	-	1.5	100L		-	96847113	96847113	96847114	96810019

Pump type			Motor					Stub shaft	Split shaft			Motor bush
			Poles	Power [kW]		Frame size	Make	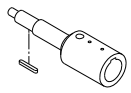	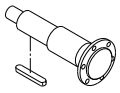			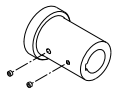
								Material code				
				50 Hz	60 Hz			A, B, C, D, E, F, G, H, S	A, B, C, D, E, F, G, H, S	K, M, N, P	I, J, L, R , T, U, W	
125	100	160	6	-	2.2	112M		-	96847113	96847113	96847114	96810019
125	100	200	2	30	-	200L		96039361	-	96847117	96847118	96306482
125	100	200	2	37	-	200L		96039361	-	96847117	96847118	96306482
125	100	200	2	45	-	225M		96537610	-	96847117	96847118	96810022
125	100	200	2	55	55	250M		-	96847121	96847121	96847123	96306483
125	100	200	2	75	75	280S		-	96847121	96847121	96847123	96306484
125	100	200	2	-	90	280M		-	96847121	96847121	96847123	96306484
125	100	200	2	-	110	315S		-	96847121	96847121	96847123	96306484
125	100	200	2	-	132	315M		-	96847121	96847121	96847123	96306484
125	100	200	4	4.0	-	112M		-	96847117	96847117	96847118	96810019
125	100	200	4	5.5	5.5	132S		96039358	-	96847117	96847118	96810020
125	100	200	4	7.5	7.5	132M		96039358	-	96847117	96847118	96810020
125	100	200	4	11.0	11	160M		96039359	-	96847117	96847118	96810021
125	100	200	4	-	15	160L		96039359	-	96847117	96847118	96810021
125	100	200	4	-	18.5	180M		96039360	-	96847117	96847118	96306481
125	100	200	6	1.1	-	90L		-	96847117	96847117	96847118	96810018
125	100	200	6	1.5	1.5	100L		-	96847117	96847117	96847118	96810019
125	100	200	6	2.2	2.2	112M		-	96847117	96847117	96847118	96810019
125	100	200	6	3.0	3.0	132SA		96039358	-	96847117	96847118	96810020
125	100	200	6	-	4.0	132MA		96039358	-	96847117	96847118	96810020
125	100	200	6	-	5.5	132MB		96039358	-	96847117	96847118	96810020
125	100	250	2	55	-	250M		-	96306479	96306479	96847125	96306483
125	100	250	2	75	-	280S		-	96306479	96306479	96847125	96306484
125	100	250	2	90	-	280M		-	96306479	96306479	96847125	96306484
125	100	250	2	110	110	315S		-	96306479	96306479	96847125	96306484
125	100	250	2	132	132	315M		-	96306479	96306479	96847125	96306484
125	100	250	2	-	160	315L		-	96306479	96306479	96847125	96306484
125	100	250	2	-	200	315L		-	96306479	96306479	96847125	96306484
125	100	250	4	7.5	-	132M		-	96306478	96306478	96847124	96810020
125	100	250	4	18.5	18.5	180M		-	96306478	96306478	96847124	96306481
125	100	250	4	-	22	180L		-	96306478	96306478	96847124	96306481
125	100	250	4	-	30	200L		-	96306478	96306478	96847124	96306482
125	100	250	4	11.0	-	160M		-	96306478	96306478	96847124	96810021
125	100	250	4	15.0	15	160L		-	96306478	96306478	96847124	96810021
125	100	250	6	2.2	-	112M		-	96306478	96306478	96847124	96810019
125	100	250	6	3.0	-	132SA		-	96306478	96306478	96847124	96810020
125	100	250	6	4.0	4.0	132MA		-	96306478	96306478	96847124	96810020
125	100	250	6	5.5	5.5	132MB		-	96306478	96306478	96847124	96810020
125	100	250	6	-	7.5	160M		-	96306478	96306478	96847124	96810021
125	100	250	6	-	11	160L		-	96306478	96306478	96847124	96810021
125	100	315	2	110	-	315S		-	96306479	96306479	96847125	96306484
125	100	315	2	132	-	315M		-	96306479	96306479	96847125	96306484
125	100	315	2	160	-	315L		-	96306479	96306479	96847125	96306484
125	100	315	2	200	-	315L		-	96306479	96306479	96847125	96306484
125	100	315	4	18.5	-	180M		-	96306478	96306478	96847124	96306481
125	100	315	4	22	22	180L		-	96306478	96306478	96847124	96306481
125	100	315	4	30	30	200L		-	96306478	96306478	96847124	96306482
125	100	315	4	-	37	225S		-	96306479	96306479	96847125	96306483
125	100	315	4	-	45	225M		-	96306479	96306479	96847125	96306483

Pump type			Motor					Stub shaft	Split shaft			Motor bush
			Poles	Power [kW]		Frame size	Make	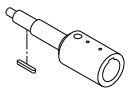	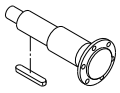			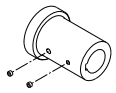
								Material code				
				50 Hz	60 Hz			A, B, C, D, E, F, G, H, S	A, B, C, D, E, F, G, H, S	K, M, N, P	I, J, L, R , T, U, W	
125	100	315	4	-	55	250M	Siemens, MMG-E	-	96306479	96306479	96847125	96306484
125	100	315	4	-	55	250M	MMG-G, EFF1 & EFF2	-	96306479	96306479	96847125	96810023
125	100	315	4	15.0	-	160L		-	96306478	96306478	96847124	96810021
125	100	315	6	4.0	-	132MA		-	96306478	96306478	96847124	96810020
125	100	315	6	5.5	-	132MB		-	96306478	96306478	96847124	96810020
125	100	315	6	7.5	7.5	160M		-	96306478	96306478	96847124	96810021
125	100	315	6	-	15	180L		-	96306478	96306478	96847124	96306481
125	100	315	6	11.0	11	160L		-	96306478	96306478	96847124	96810021
125	100	400	4	22	-	180L		-	96306478	96306478	96847124	96306481
125	100	400	4	30	-	200L		-	96306478	96306478	96847124	96306482
125	100	400	4	37	37	225S		-	96306479	96306479	96847125	96306483
125	100	400	4	45	45	225M		-	96306479	96306479	96847125	96306483
125	100	400	4	55	55	250M		-	96306479	96306479	96847125	96306484
125	100	400	4	55	55	250M		-	96306479	96306479	96847125	96810023
125	100	400	4	-	75	280S		-	96306479	96306479	96847125	96306485
125	100	400	4	-	75	280S		-	96306479	96306479	96847125	96306486
125	100	400	4	-	90	280M		-	96306479	96306479	96847125	96306485
125	100	400	4	-	90	280M		-	96306479	96306479	96847125	96306486
125	100	400	6	7.5	-	160M		-	96306478	96306478	96847124	96810021
125	100	400	6	11.0	11	160L		-	96306478	96306478	96847124	96810021
125	100	400	6	15.0	15	180L		-	96306478	96306478	96847124	96306481
125	100	400	6	18.5	18.5	200LA		-	96306478	96306478	96847124	96306482
125	100	400	6	-	22	200LB		-	96306478	96306478	96847124	96306482
125	100	400	6	-	30	225M		-	96306479	96306479	96847125	96306483
150	125	200	2	45	-	225M		96537610	-	96847117	96847118	96810022
150	125	200	2	55	-	250M		-	96847121	96847121	96847123	96306483
150	125	200	2	75	75	280S		-	96847121	96847121	96847123	96306484
150	125	200	2	90	90	280S		-	96847121	96847121	96847123	96306484
150	125	200	2	110	110	315S		-	96847121	96847121	96847123	96306484
150	125	200	2	-	132	315M		-	96847121	96847121	96847123	96306484
150	125	200	2	-	160	315L		-	96847121	96847121	96847123	96306484
150	125	200	2	-	200	315L		-	96847121	96847121	96847123	96306484
150	125	200	4	5.5	-	132S		96039358	-	96847117	96847118	96810020
150	125	200	4	7.5	-	132M		96039358	-	96847117	96847118	96810020
150	125	200	4	11.0	11	160M		96039359	-	96847117	96847118	96810021
150	125	200	4	15.0	15	160L		96039359	-	96847117	96847118	96810021
150	125	200	4	-	18.5	180M		96039360	-	96847117	96847118	96306481
150	125	200	4	-	22	180L		96039360	-	96847117	96847118	96306481
150	125	200	6	1.5	-	100L		-	96847117	96847117	96847118	96810019
150	125	200	6	2.2	-	112M		-	96847117	96847117	96847118	96810019
150	125	200	6	3.0	3.0	132SA		96039358	-	96847117	96847118	96810020
150	125	200	6	4.0	4.0	132MA		96039358	-	96847117	96847118	96810020
150	125	200	6	-	5.5	132MB		96039358	-	96847117	96847118	96810020
150	125	200	6	-	7.5	160M		96039359	-	96847117	96847118	96810021
150	125	250	2	90	-	280S		-	96306479	96306479	96847125	96306484
150	125	250	2	110	-	315S		-	96306479	96306479	96847125	96306484
150	125	250	2	132	-	315M		-	96306479	96306479	96847125	96306484
150	125	250	2	160	160	315L		-	96306479	96306479	96847125	96306484
150	125	250	2	200	200	315L		-	96306479	96306479	96847125	96306484

Pump type			Motor					Stub shaft	Split shaft			Motor bush
			Poles	Power [kW]		Frame size	Make	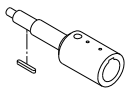	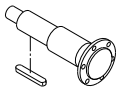			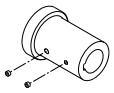
								Material code				
				50 Hz	60 Hz			A, B, C, D, E, F, G, H, S	A, B, C, D, E, F, G, H, S	K, M, N, P	I, J, L, R , T, U, W	
150	125	250	4	18.5	18.5	180M		-	96306478	96306478	96847124	96306481
150	125	250	4	22	22	180L		-	96306478	96306478	96847124	96306481
150	125	250	4	30	30	200L		-	96306478	96306478	96847124	96306482
150	125	250	4	-	37	225S		-	96306479	96306479	96847125	96306483
150	125	250	4	-	45	225M		-	96306479	96306479	96847125	96306483
150	125	250	4	11.0	-	160M		-	96306478	96306478	96847124	96810021
150	125	250	4	15.0	-	160L		-	96306478	96306478	96847124	96810021
150	125	250	6	3.0	-	132SA		-	96306478	96306478	96847124	96810020
150	125	250	6	4.0	-	132MA		-	96306478	96306478	96847124	96810020
150	125	250	6	5.5	5.5	132MB		-	96306478	96306478	96847124	96810020
150	125	250	6	7.5	7.5	160M		-	96306478	96306478	96847124	96810021
150	125	250	6	-	11	160L		-	96306478	96306478	96847124	96810021
150	125	250	6	-	15	180L		-	96306478	96306478	96847124	96306481
150	125	315	2	132	-	315M		-	96306479	96306479	96847125	96306484
150	125	315	2	160	-	315L		-	96306479	96306479	96847125	96306484
150	125	315	2	200	-	315L		-	96306479	96306479	96847125	96306484
150	125	315	4	18.5	-	180M		-	96306478	96306478	96847124	96306481
150	125	315	4	22	-	180L		-	96306478	96306478	96847124	96306481
150	125	315	4	30	30	200L		-	96306478	96306478	96847124	96306482
150	125	315	4	37	37	225S		-	96306479	96306479	96847125	96306483
150	125	315	4	45	45	225M		-	96306479	96306479	96847125	96306483
150	125	315	4	-	55	250M	Siemens, MMG-E	-	96306479	96306479	96847125	96306484
150	125	315	4	-	55	250M	MMG-G, EFF1 & EFF2	-	96306479	96306479	96847125	96810023
150	125	315	4	-	75	280S	Siemens, MMG-E	-	96306479	96306479	96847125	96306485
150	125	315	4	-	75	280S	MMG-G, EFF1 & EFF2	-	96306479	96306479	96847125	96810023
150	125	315	6	5.5	-	132MB		-	96306478	96306478	96847124	96810020
150	125	315	6	7.5	7.5	160M		-	96306478	96306478	96847124	96810021
150	125	315	6	-	18.5	200LA	Siemens	-	96306478	96306478	96847124	96306482
150	125	315	6	-	22	200LB	Siemens	-	96306478	96306478	96847124	96306482
150	125	315	6	11.0	11	160L		-	96306478	96306478	96847124	96810021
150	125	315	6	15.0	15	180L		-	96306478	96306478	96847124	96306481
150	125	400	4	37	-	225S		-	96306479	96306479	96847125	96306483
150	125	400	4	45	-	225M		-	96306479	96306479	96847125	96306483
150	125	400	4	55	55	250M	Siemens, MMG-E	-	96306479	96306479	96847125	96306484
150	125	400	4	55	55	250M	MMG-G, EFF1 & EFF2	-	96306479	96306479	96847125	96810023
150	125	400	4	75	75	280S	Siemens, MMG-E	-	96306479	96306479	96847125	96306485
150	125	400	4	75	75	280S	MMG-G, EFF1 & EFF2	-	96306479	96306479	96847125	96810023
150	125	400	4	90	90	280M	Siemens, MMG-E	-	96306479	96306479	96847125	96306485
150	125	400	4	90	90	280M	MMG-G, EFF1 & EFF2	-	96306479	96306479	96847125	96306486
150	125	400	4	-	110	315S	Siemens, MMG-E	-	96306479	96306479	96847125	96306486
150	125	400	4	-	110	315S	MMG-G, EFF1 & EFF2	-	96306479	96306479	96847125	96306486
150	125	400	4	-	132	315M	Siemens, MMG-E	-	96306479	96306479	96847125	96306486
150	125	400	4	-	132	315M	MMG-G, EFF1 & EFF2	-	96306479	96306479	96847125	96306487
150	125	400	6	18.5	18.5	200LA	Siemens	-	96306478	96306478	96847124	96306482
150	125	400	6	22	22	200LB	Siemens	-	96306478	96306478	96847124	96306482
150	125	400	6	30	30	225M	Siemens	-	96306479	96306479	96847125	96306483
150	125	400	6	-	37	250M	Siemens	-	96306479	96306479	96847125	96306484
150	125	400	6	-	37	250M	MMG-G, EFF1 & EFF2	-	96306479	96306479	96847125	96810023
150	125	400	6	-	45	280S	Siemens, MMG-E	-	96306479	96306479	96847125	96306485

Pump type			Motor					Stub shaft	Split shaft			Motor bush
			Poles	Power [kW]		Frame size	Make	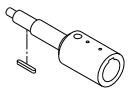	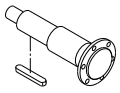			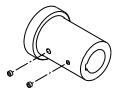
								Material code				
				50 Hz	60 Hz			A, B, C, D, E, F, G, H, S	A, B, C, D, E, F, G, H, S	K, M, N, P	I, J, L, R , T, U, W	
150	125	400	6	-	45	280S	MMG-G, EFF1 & EFF2	-	96306479	96306479	96847125	96306486
150	125	400	6	11.0	-	160L		-	96306478	96306478	96847124	96810021
150	125	400	6	15.0	-	180L		-	96306478	96306478	96847124	96306481
150	125	500	4	55	-	250M	Siemens, MMG-E	-	96847130	96847130	96847130	96306484
150	125	500	4	55	-	250M	MMG-G, EFF1 & EFF2	-	96847130	96847130	96847130	96810023
150	125	500	4	75	-	280S	Siemens, MMG-E	-	96847130	96847130	96847130	96306485
150	125	500	4	75	-	280S	MMG-G, EFF1 & EFF2	-	96847130	96847130	96847130	96810023
150	125	500	4	90	-	280M	Siemens, MMG-E	-	96847130	96847130	96847130	96306485
150	125	500	4	90	-	280M	MMG-G, EFF1 & EFF2	-	96847130	96847130	96847130	96306486
150	125	500	4	110	110	315S	Siemens, MMG-E	-	96847130	96847130	96847130	96306486
150	125	500	4	110	110	315S	MMG-G, EFF1 & EFF2	-	96847130	96847130	96847130	96306486
150	125	500	4	132	132	315M	Siemens, MMG-E	-	96847130	96847130	96847130	96306486
150	125	500	4	132	132	315M	MMG-G, EFF1 & EFF2	-	96847130	96847130	96847130	96306487
150	125	500	4	160	160	315M	Siemens, MMG-E	-	96847130	96847130	96847130	96306486
150	125	500	4	160	160	315M	MMG-G, EFF1 & EFF2	-	96847130	96847130	96847130	96306487
150	125	500	4	-	200	315L	Siemens, MMG-E	-	96847130	96847130	96847130	96306486
150	125	500	4	-	200	315L	MMG-G, EFF1 & EFF2	-	96847130	96847130	96847130	96306487
150	125	500	6	18.5	-	200LA	Siemens	-	96847128	96847128	96847128	96306482
150	125	500	6	22	-	200LB	Siemens	-	96847128	96847128	96847128	96306482
150	125	500	6	30	-	225M	Siemens	-	96847130	96847130	96847130	96306483
150	125	500	6	37	37	250M	Siemens	-	96847130	96847130	96847130	96306484
150	125	500	6	37	37	250M	MMG-G, EFF1 & EFF2	-	96847130	96847130	96847130	96810023
150	125	500	6	45	45	280S	Siemens, MMG-E	-	96847130	96847130	96847130	96306485
150	125	500	6	45	45	280S	MMG-G, EFF1 & EFF2	-	96847130	96847130	96847130	96306486
150	125	500	6	55	55	280M	Siemens, MMG-E	-	96847130	96847130	96847130	96306485
150	125	500	6	55	55	280M	MMG-G (TECO)	-	96847130	96847130	96847130	96306486
150	125	500	6	-	75	315S	Siemens, MMG-E	-	96847130	96847130	96847130	96306487
150	125	500	6	-	75	280M	MMG-G (TECO)	-	96847130	96847130	96847130	96306487
150	125	500	6	-	75	280M	MMG-G (TECO)	-	96847130	96847130	96847130	96306487
150	125	500	6	-	90	315MA	Siemens, MMG-E	-	96847130	96847130	96847130	96306486
150	125	500	6	-	90	315MA	MMG-G, EFF1 & EFF2	-	96847130	96847130	96847130	96306487
200	150	200	2	75	-	280S		-	96847121	96847121	96847123	96306484
200	150	200	2	90	-	280M		-	96847121	96847121	96847123	96306484
200	150	200	2	110	110	315S		-	96847121	96847121	96847123	96306484
200	150	200	2	-	132	315M		-	96847121	96847121	96847123	96306484
200	150	200	2	-	160	315L		-	96847121	96847121	96847123	96306484
200	150	200	2	-	200	315L		-	96847121	96847121	96847123	96306484
200	150	200	4	7.5	-	132M		96039358	-	96847117	96847118	96810020
200	150	200	4	11.0	-	160M		96039359	-	96847117	96847118	96810021
200	150	200	4	15.0	15	160L		96039359	-	96847117	96847118	96810021
200	150	200	4	-	18.5	180M		96039360	-	96847117	96847118	96306481
200	150	200	4	-	22	180L		96039360	-	96847117	96847118	96306481
200	150	200	6	2.2	-	112M		-	96847117	96847117	96847118	96810019
200	150	200	6	3.0	-	132SA		96039358	-	96847117	96847118	96810020
200	150	200	6	4.0	4.0	132MA		96039358	-	96847117	96847118	96810020
200	150	200	6	-	5.5	132MB		96039358	-	96847117	96847118	96810020
200	150	200	6	-	7.5	160M		96039359	-	96847117	96847118	96810021
200	150	250	2	132	-	315M		-	96306479	96306479	96847125	96306484
200	150	250	2	160	-	315L		-	96306479	96306479	96847125	96306484

Pump type			Motor					Stub shaft	Split shaft			Motor bush
			Poles	Power [kW]		Frame size	Make	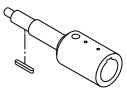	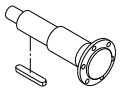			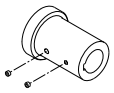
									Material code			
				50 Hz	60 Hz			A, B, C, D, E, F, G, H, S	A, B, C, D, E, F, G, H, S	K, M, N, P	I, J, L, R , T, U, W	
200	150	250	2	200	-	315L		-	96306479	96306479	96847125	96306484
200	150	250	4	18.5	-	180M		-	96306478	96306478	96847124	96306481
200	150	250	4	22	-	180L		-	96306478	96306478	96847124	96306481
200	150	250	4	30	30	200L		-	96306478	96306478	96847124	96306482
200	150	250	4	37	37	225S		-	96306479	96306479	96847125	96306483
200	150	250	4	45	45	225M		-	96306479	96306479	96847125	96306483
200	150	250	4	-	55	250M	Siemens, MMG-E	-	96306479	96306479	96847125	96306484
200	150	250	4	-	55	250M	MMG-G, EFF1 & EFF2	-	96306479	96306479	96847125	96810023
200	150	250	4	-	75	280S	Siemens, MMG-E	-	96306479	96306479	96847125	96306485
200	150	250	4	-	75	280S	MMG-G, EFF1 & EFF2	-	96306479	96306479	96847125	96810023
200	150	250	4	15.0	-	160L		-	96306478	96306478	96847124	96810021
200	150	250	6	5.5	-	132MB		-	96306478	96306478	96847124	96810020
200	150	250	6	7.5	-	160M		-	96306478	96306478	96847124	96810021
200	150	250	6	-	15	180L		-	96306478	96306478	96847124	96306481
200	150	250	6	-	18.5	200LA	Siemens	-	96306478	96306478	96847124	96306482
200	150	250	6	11.0	11	160L		-	96306478	96306478	96847124	96810021
200	150	315	4	37	-	225S		-	96306480	96306480	96847127	96306483
200	150	315	4	45	-	225M		-	96306480	96306480	96847127	96306483
200	150	315	4	55	55	250M	Siemens, MMG-E	-	96306480	96306480	96847127	96306484
200	150	315	4	55	55	250M	MMG-G, EFF1 & EFF2	-	96306480	96306480	96847127	96810023
200	150	315	4	75	75	280S	Siemens, MMG-E	-	96306480	96306480	96847127	96306485
200	150	315	4	75	75	280S	MMG-G, EFF1 & EFF2	-	96306480	96306480	96847127	96810023
200	150	315	4	90	90	280M	Siemens, MMG-E	-	96306480	96306480	96847127	96306485
200	150	315	4	90	90	280M	MMG-G, EFF1 & EFF2	-	96306480	96306480	96847127	96306486
200	150	315	4	-	110	315S	Siemens, MMG-E	-	96306480	96306480	96847127	96306486
200	150	315	4	-	110	315S	MMG-G, EFF1 & EFF2	-	96306480	96306480	96847127	96306486
200	150	315	4	-	132	315M	Siemens, MMG-E	-	96306480	96306480	96847127	96306486
200	150	315	4	-	132	315M	MMG-G, EFF1 & EFF2	-	96306480	96306480	96847127	96306487
200	150	315	6	18.5	18.5	200LA	Siemens	-	96306488	96306488	96847126	96306482
200	150	315	6	22	22	200LB	Siemens	-	96306488	96306488	96847126	96306482
200	150	315	6	30	30	225M	Siemens	-	96306480	96306480	96847127	96306483
200	150	315	6	-	37	250M	Siemens	-	96306480	96306480	96847127	96306484
200	150	315	6	-	37	250M	MMG-G, EFF1 & EFF2	-	96306480	96306480	96847127	96810023
200	150	315	6	11.0	-	160L		-	96306488	96306488	96847126	96810021
200	150	315	6	15.0	-	180L		-	96306488	96306488	96847126	96306481
200	150	315.1	2	200	-	315L		-	96306480	96306480	96847127	96306484
200	150	315.1	2	160	-	315L		-	96306480	96306480	96847127	96306484
200	150	315.1	4	-	75	280S		-	96306480	96306480	96847127	96306485
200	150	315.1	4	-	55	250M		-	96306480	96306480	96847127	96306484
200	150	315.1	4	45	45	225M		-	96306480	96306480	96847127	96306483
200	150	315.1	4	37	37	225S		-	96306480	96306480	96847127	96306483
200	150	315.1	4	30	30	200L		-	96306488	96306488	96847126	96306482
200	150	315.1	4	22	-	180L		-	96306488	96306488	96847126	96306481
200	150	315.1	4	18.5	-	180M		-	96306488	96306488	96847126	96306481
200	150	315.1	6	-	22	200L		-	96306488	96306488	96847126	96306482
200	150	315.1	6	-	18.5	200L		-	96306488	96306488	96847126	96306482
200	150	315.1	6	15	15	180L		-	96306488	96306488	96847126	96306481
200	150	315.1	6	11	11	160L		-	96306488	96306488	96847126	96810021
200	150	315.1	6	7.5	7.5	160M		-	96306488	96306488	96847126	96810021

Pump type			Motor					Stub shaft	Split shaft			Motor bush
			Poles	Power [kW]		Frame size	Make	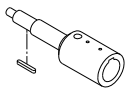	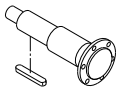			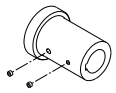
								Material code				
				50 Hz	60 Hz			A, B, C, D, E, F, G, H, S	A, B, C, D, E, F, G, H, S	K, M, N, P	I, J, L, R , T, U, W	
200	150	315.1	6	5.5	-	132M		-	96306478	96306478	96847124	96810020
200	150	315.2	2	200	200	315L		-	96306480	96306480	96847127	96306484
200	150	315.2	2	160	160	315L		-	96306480	96306480	96847127	96306484
200	150	315.2	4	75	75	280S		-	96306480	96306480	96847127	96306485
200	150	315.2	4	55	55	250M		-	96306480	96306480	96847127	96306484
200	150	315.2	4	45	45	225M		-	96306480	96306480	96847127	96306483
200	150	315.2	4	37	37	225S		-	96306480	96306480	96847127	96306483
200	150	315.2	4	30	-	200L		-	96306488	96306488	96847126	96306482
200	150	315.2	4	22	-	180L		-	96306488	96306488	96847126	96306481
200	150	315.2	6	-	22	200L		-	96306488	96306488	96847126	96306482
200	150	315.2	6	18.5	18.5	200L		-	96306488	96306488	96847126	96306482
200	150	315.2	6	15	15	180L		-	96306488	96306488	96847126	96306481
200	150	315.2	6	11	11	160L		-	96306488	96306488	96847126	96810021
200	150	315.2	6	7.5	-	160M		-	96306488	96306488	96847126	96810021
200	150	400	4	55	-	250M	Siemens, MMG-E	-	96306480	96306480	96847127	96306484
200	150	400	4	55	-	250M	MMG-G, EFF1 & EFF2	-	96306480	96306480	96847127	96810023
200	150	400	4	75	-	280S	Siemens, MMG-E	-	96306480	96306480	96847127	96306485
200	150	400	4	75	-	280S	MMG-G, EFF1 & EFF2	-	96306480	96306480	96847127	96810023
200	150	400	4	90	90	280M	Siemens, MMG-E	-	96306480	96306480	96847127	96306485
200	150	400	4	90	90	280M	MMG-G, EFF1 & EFF2	-	96306480	96306480	96847127	96306486
200	150	400	4	110	110	315S	Siemens, MMG-E	-	96306480	96306480	96847127	96306486
200	150	400	4	110	110	315S	MMG-G, EFF1 & EFF2	-	96306480	96306480	96847127	96306486
200	150	400	4	132	132	315M	Siemens, MMG-E	-	96306480	96306480	96847127	96306486
200	150	400	4	132	132	315M	MMG-G, EFF1 & EFF2	-	96306480	96306480	96847127	96306487
200	150	400	4	160	160	315M	Siemens, MMG-E	-	96306480	96306480	96847127	96306486
200	150	400	4	160	160	315M	MMG-G, EFF1 & EFF2	-	96306480	96306480	96847127	96306487
200	150	400	4	-	200	315L	Siemens, MMG-E	-	96306480	96306480	96847127	96306486
200	150	400	4	-	200	315L	MMG-G, EFF1 & EFF2	-	96306480	96306480	96847127	96306487
200	150	400	6	18.5	-	200LA	Siemens	-	96306488	96306488	96847126	96306482
200	150	400	6	22	22	200LB	Siemens	-	96306488	96306488	96847126	96306482
200	150	400	6	30	30	225M	Siemens	-	96306480	96306480	96847127	96306483
200	150	400	6	37	37	250M	Siemens	-	96306480	96306480	96847127	96306484
200	150	400	6	37	37	250M	MMG-G, EFF1 & EFF2	-	96306480	96306480	96847127	96810023
200	150	400	6	45	45	280S	Siemens, MMG-E	-	96306480	96306480	96847127	96306485
200	150	400	6	45	45	280S	MMG-G, EFF1 & EFF2	-	96306480	96306480	96847127	96306486
200	150	400	6	-	55	280M	Siemens, MMG-E	-	96306480	96306480	96847127	96306485
200	150	400	6	-	55	280M	MMG-G (TECO)	-	96306480	96306480	96847127	96306486
200	150	400	6	-	75	315S	Siemens, MMG-E	-	96847130	96847130	96847130	96306487
200	150	400	6	-	75	280M	MMG-G (TECO)	-	96306480	96306480	96847127	96306487
200	150	400	6	-	75	280M	MMG-G (TECO)	-	96306480	96306480	96847127	96306487
200	150	500	4	132	-	315M	Siemens, MMG-E	-	96847130	96847130	96847130	96306486
200	150	500	4	132	-	315M	MMG-G, EFF1 & EFF2	-	96847130	96847130	96847130	96306487
200	150	500	4	160	-	315M	Siemens, MMG-E	-	96847130	96847130	96847130	96306486
200	150	500	4	160	-	315M	MMG-G, EFF1 & EFF2	-	96847130	96847130	96847130	96306487
200	150	500	4	200	200	315L	Siemens, MMG-E	-	96847130	96847130	96847130	96306486
200	150	500	4	200	200	315L	MMG-G, EFF1 & EFF2	-	96847130	96847130	96847130	96306487
200	150	500	6	37	-	250M	Siemens	-	96847130	96847130	96847130	96306484
200	150	500	6	37	-	250M	MMG-G, EFF1 & EFF2	-	96847130	96847130	96847130	96810023
200	150	500	6	45	-	280S	Siemens, MMG-E	-	96847130	96847130	96847130	96306485

Pump type			Motor					Stub shaft	Split shaft			Motor bush
			Poles	Power [kW]		Frame size	Make	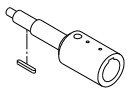	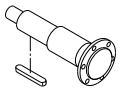			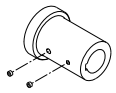
									Material code			
				50 Hz	60 Hz			A, B, C, D, E, F, G, H, S	A, B, C, D, E, F, G, H, S	K, M, N, P	I, J, L, R , T, U, W	
200	150	500	6	45	-	280S	MMG-G, EFF1 & EFF2	-	96847130	96847130	96847130	96306486
200	150	500	6	55	55	280M	Siemens, MMG-E	-	96847130	96847130	96847130	96306485
200	150	500	6	55	55	280M	MMG-G (TECO)	-	96847130	96847130	96847130	96306486
200	150	500	6	75	75	280M	MMG-G (TECO)	-	96847130	96847130	96847130	96306487
200	150	500	6	75	75	280M	MMG-G (TECO)	-	96847130	96847130	96847130	96306487
200	150	500	6	-	90	315MA	Siemens, MMG-E	-	96847130	96847130	96847130	96306486
200	150	500	6	-	90	315MA	MMG-G, EFF1 & EFF2	-	96847130	96847130	96847130	96306487
200	150	500	6	-	110	315MB	Siemens, MMG-E	-	96847130	96847130	96847130	96306486
200	150	500	6	-	110	315MB	MMG-G, EFF1 & EFF2	-	96847130	96847130	96847130	96306487
200	150	500	6	-	132	315L	Siemens, MMG-E	-	96847130	96847130	96847130	96306486
200	150	500	6	-	132	315L	MMG-G, EFF1 & EFF2	-	96847130	96847130	96847130	96306487
250	200	400	4	37	-	225S		-	96306480	-	-	96306483
250	200	400	4	45	-	225M		-	96306480	-	-	96306483
250	200	400	4	55	55	250M	Siemens, MMG-E	-	96306480	-	-	96306484
250	200	400	4	55	55	250SC	MMG-G, EFF1 & EFF2	-	96306480	-	-	96810023
250	200	400	4	75	75	280S	Siemens, MMG-E	-	96306480	-	-	96306485
250	200	400	4	75	75	250MC	MMG-G, EFF1 & EFF2	-	96306480	-	-	96810023
250	200	400	4	90	90	280M	Siemens, MMG-E	-	96306480	-	-	96306485
250	200	400	4	90	90	280S	MMG-G, EFF1 & EFF2	-	96306480	-	-	96306486
250	200	400	4	110	110	315S	Siemens, MMG-E	-	96306480	-	-	96306486
250	200	400	4	110	110	280M	MMG-G, EFF1 & EFF2	-	96306480	-	-	96306487
250	200	400	4	132	132	315M	Siemens, MMG-E	-	96306480	-	-	96306486
250	200	400	4	132	132	315S	MMG-G, EFF1 & EFF2	-	96306480	-	-	96306487
250	200	400	4	-	160	315L	Siemens, MMG-E	-	96306480	-	-	96306486
250	200	400	4	-	160	315M	MMG-G, EFF1 & EFF2	-	96306480	-	-	96306487
250	200	400	4	-	200	315L	Siemens, MMG-E	-	96306480	-	-	96306486
250	200	400	4	-	200	315M	MMG-G, EFF1 & EFF2	-	96306480	-	-	96306487
250	200	400	6	15	-	180L		-	96306488	-	-	96306481
250	200	400	6	18.5	-	200L		-	96306488	-	-	96306482
250	200	400	6	22	22	200L		-	96306488	-	-	96306482
250	200	400	6	30	30	225M		-	96306480	-	-	96306483
250	200	400	6	37	37	250M		-	96306480	-	-	96306484
250	200	400	6	37	37	250S		-	96306480	-	-	96810023
250	200	400	6	-	45	280S	Siemens, MMG-E	-	96306480	-	-	96306485
250	200	400	6	-	45	250M	MMG-G, EFF1 & EFF2	-	96306480	-	-	96810023
250	200	400	6	-	55	280M	Siemens, MMG-E	-	96306480	-	-	96306485
250	200	400	6	-	55	280S	MMG-G, EFF1 & EFF2	-	96306480	-	-	96306486
250	200	450	4	75	75	280S	Siemens, MMG-E	-	96306480	-	-	96306485
250	200	450	4	75	75	250MC	MMG-G, EFF1 & EFF2	-	96306480	-	-	96810023
250	200	450	4	90	90	280M	Siemens, MMG-E	-	96306480	-	-	96306485
250	200	450	4	90	90	280S	MMG-G, EFF1 & EFF2	-	96306480	-	-	96306486
250	200	450	4	110	110	315S	Siemens, MMG-E	-	96306480	-	-	96306486
250	200	450	4	110	110	280M	MMG-G, EFF1 & EFF2	-	96306480	-	-	96306486
250	200	450	4	132	132	315M	Siemens, MMG-E	-	96306480	-	-	96306486
250	200	450	4	132	132	315S	MMG-G, EFF1 & EFF2	-	96306480	-	-	96306487
250	200	450	4	160	160	315L	Siemens, MMG-E	-	96306480	-	-	96306486
250	200	450	4	160	160	315M	MMG-G, EFF1 & EFF2	-	96306480	-	-	96306487
250	200	450	4	-	200	315L	Siemens, MMG-E	-	96306480	-	-	96306486
250	200	450	4	-	200	315M	MMG-G, EFF1 & EFF2	-	96306480	-	-	96306487

Pump type			Motor					Stub shaft	Split shaft			Motor bush
			Poles	Power [kW]		Frame size	Make	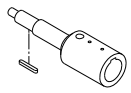	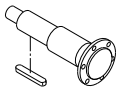			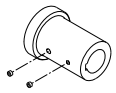
								Material code				
				50 Hz	60 Hz			A, B, C, D, E, F, G, H, S	A, B, C, D, E, F, G, H, S	K, M, N, P	I, J, L, R , T, U, W	
250	200	450	4	-	288	315L	Siemens	-	96306480	-	-	96306487
250	200	450	4	-	250	355M	MMG-E	-	96306480	-	-	96810026
250	200	450	4	-	250	315C	MMG-G, EFF1 & EFF2	-	96306480	-	-	96810026
250	200	450	6	18.5	-	200L		-	96306488	-	-	96306482
250	200	450	6	22	-	200L		-	96306488	-	-	96306482
250	200	450	6	30	-	225M		-	96306480	-	-	96306483
250	200	450	6	37	37	250M	Siemens, MMG-E	-	96306480	-	-	96306484
250	200	450	6	37	37	250S	MMG-G, EFF1 & EFF2	-	96306480	-	-	96810023
250	200	450	6	45	45	280S	Siemens, MMG-E	-	96306480	-	-	96306485
250	200	450	6	45	45	250M	MMG-G, EFF1 & EFF2	-	96306480	-	-	96810023
250	200	450	6	-	55	280M	Siemens, MMG-E	-	96306480	-	-	96306485
250	200	450	6	-	55	280S	MMG-G, EFF1 & EFF2	-	96306480	-	-	96306486
250	200	450	6	-	75	315S	Siemens, MMG-E	-	96306480	-	-	96306486
250	200	450	6	-	75	280M	MMG-G, EFF1 & EFF2	-	96306480	-	-	96306486
250	200	450	6	-	90	315M	Siemens, MMG-E	-	96306480	-	-	96306486
250	200	450	6	-	90	315S	MMG-G, EFF1 & EFF2	-	96306480	-	-	96306487
300	250	350	4	37	-	225S		-	96306480	-	-	96306483
300	250	350	4	45	-	225M		-	96306480	-	-	96306483
300	250	350	4	55	-	250M		-	96306480	-	-	96306484
300	250	350	4	55	-	250SC		-	96306480	-	-	96810023
300	250	350	4	75	75	280S	Siemens, MMG-E	-	96306480	-	-	96306485
300	250	350	4	75	75	250MC	MMG-G, EFF1 & EFF2	-	96306480	-	-	96810023
300	250	350	4	90	90	280M	Siemens, MMG-E	-	96306480	-	-	96306485
300	250	350	4	90	90	280S	MMG-G, EFF1 & EFF2	-	96306480	-	-	96306486
300	250	350	4	-	110	315S	Siemens, MMG-E	-	96306480	-	-	96306486
300	250	350	4	-	110	280M	MMG-G, EFF1 & EFF2	-	96306480	-	-	96306486
300	250	350	4	-	132	315M	Siemens, MMG-E	-	96306480	-	-	96306486
300	250	350	4	-	132	315S	MMG-G, EFF1 & EFF2	-	96306480	-	-	96306487
300	250	350	6	11	-	160L		-	96306488	-	-	96810021
300	250	350	6	15	-	180L		-	96306488	-	-	96306481
300	250	350	6	18.5	-	200L		-	96306488	-	-	96306482
300	250	350	6	22	22	200L		-	96306488	-	-	96306482
300	250	350	6	-	30	225M		-	96306480	-	-	96306483
300	250	350	6	-	37	250M	Siemens, MMG-E	-	96306480	-	-	96306484
300	250	350	6	-	37	250S	MMG-G, EFF1 & EFF2	-	96306480	-	-	96810023
300	250	350	6	-	45	280S	Siemens, MMG-E	-	96306480	-	-	96306485
300	250	350	6	-	45	250M	MMG-G, EFF1 & EFF2	-	96306480	-	-	96810023
300	250	400	4	45	-	225M		-	96306480	-	-	96306483
300	250	400	4	55	-	250M	Siemens, MMG-E	-	96306480	-	-	96306484
300	250	400	4	55	-	250SC	MMG-G, EFF1 & EFF2	-	96306480	-	-	96810023
300	250	400	4	75	75	280S	Siemens, MMG-E	-	96306480	-	-	96306485
300	250	400	4	75	75	250MC	MMG-G, EFF1 & EFF2	-	96306480	-	-	96810023
300	250	400	4	90	90	280M	Siemens, MMG-E	-	96306480	-	-	96306485
300	250	400	4	90	90	280S	MMG-G, EFF1 & EFF2	-	96306480	-	-	96306486
300	250	400	4	110	110	315S	Siemens, MMG-E	-	96306480	-	-	96306486
300	250	400	4	110	110	280M	MMG-G, EFF1 & EFF2	-	96306480	-	-	96306486
300	250	400	4	132	132	315M	Siemens, MMG-E	-	96306480	-	-	96306486
300	250	400	4	132	132	315S	MMG-G, EFF1 & EFF2	-	96306480	-	-	96306487
300	250	400	4	160	160	315L	Siemens, MMG-E	-	96306480	-	-	96306486

Pump type			Motor					Stub shaft	Split shaft			Motor bush
			Poles	Power [kW]		Frame size	Make	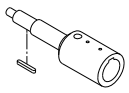	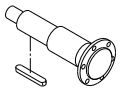			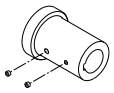
								Material code				
				50 Hz	60 Hz			A, B, C, D, E, F, G, H, S	A, B, C, D, E, F, G, H, S	K, M, N, P	I, J, L, R , T, U, W	
300	250	400	4	160	160	315M	MMG-G, EFF1 & EFF2	-	96306480	-	-	96306487
300	250	400	4	-	200	315L	Siemens, MMG-E	-	96306480	-	-	96306486
300	250	400	4	-	200	315M	MMG-G, EFF1 & EFF2	-	96306480	-	-	96306487
300	250	400	4	-	288	315L	Siemens	-	96306480	-	-	96306487
300	250	400	4	-	250	355M	MMG-E	-	96306480	-	-	96810026
300	250	400	4	-	250	315C	MMG-G, EFF1 & EFF2	-	96306480	-	-	96810026
300	250	400	6	15	-	180L		-	96306488	-	-	96306481
300	250	400	6	18.5	-	200L		-	96306488	-	-	96306482
300	250	400	6	22	-	200L		-	96306488	-	-	96306482
300	250	400	6	30	30	225M		-	96306480	-	-	96306483
300	250	400	6	37	37	250M	Siemens, MMG-E	-	96306480	-	-	96306484
300	250	400	6	37	37	250S	MMG-G, EFF1 & EFF2	-	96306480	-	-	96810023
300	250	400	6	45	45	280S	Siemens, MMG-E	-	96306480	-	-	96306485
300	250	400	6	45	45	250M	MMG-G, EFF1 & EFF2	-	96306480	-	-	96810023
300	250	400	6	-	55	280M	Siemens, MMG-E	-	96306480	-	-	96306485
300	250	400	6	-	55	280S	MMG-G, EFF1 & EFF2	-	96306480	-	-	96306486
300	250	400	6	-	75	315S	Siemens, MMG-E	-	96306480	-	-	96306486
300	250	400	6	-	75	280M	MMG-G, EFF1 & EFF2	-	96306480	-	-	96306486
300	250	400	6	-	90	315M	Siemens, MMG-E	-	96306480	-	-	96306486
300	250	400	6	-	90	315S	MMG-G, EFF1 & EFF2	-	96306480	-	-	96306487
300	250	450	4	75	-	280S	Siemens, MMG-E	-	96847130	-	-	96306485
300	250	450	4	75	-	250M	MMG-G, EFF1 & EFF2	-	96847130	-	-	96810023
300	250	450	4	90	-	280M	Siemens, MMG-E	-	96847130	-	-	96306485
300	250	450	4	90	-	280S	MMG-G, EFF1 & EFF2	-	96847130	-	-	96306486
300	250	450	4	110	110	315S	Siemens, MMG-E	-	96847130	-	-	96306486
300	250	450	4	110	110	280M	MMG-G, EFF1 & EFF2	-	96847130	-	-	96306486
300	250	450	4	132	132	315M	Siemens, MMG-E	-	96847130	-	-	96306486
300	250	450	4	132	132	315S	MMG-G, EFF1 & EFF2	-	96847130	-	-	96306487
300	250	450	4	160	160	315L	Siemens, MMG-E	-	96847130	-	-	96306486
300	250	450	4	160	160	315M	MMG-G, EFF1 & EFF2	-	96847130	-	-	96306487
300	250	450	4	200	200	315L	Siemens, MMG-E	-	96847130	-	-	96306486
300	250	450	4	200	200	315M	MMG-G, EFF1 & EFF2	-	96847130	-	-	96306487
300	250	450	4	-	288	315L	Siemens	-	96306480	-	-	96306487
300	250	450	4	-	250	355M	MMG-E	-	96306480	-	-	96810026
300	250	450	4	-	250	315C	MMG-G, EFF1 & EFF2	-	96306480	-	-	96810026
300	250	450	4	-	362	315L	Siemens	-	96847130	-	-	96306487
300	250	450	4	-	315	355L	MMG-E	-	96847130	-	-	96810026
300	250	450	4	-	315	315D	MMG-G, EFF1 & EFF2	-	96847130	-	-	96810026
300	250	450	6	18.5	-	200L		-	96847130	-	-	96306482
300	250	450	6	22	-	200L		-	96847130	-	-	96306482
300	250	450	6	30	-	225M		-	96847130	-	-	96306483
300	250	450	6	37	37	250M	Siemens, MMG-E	-	96847130	-	-	96306484
300	250	450	6	37	37	250S	MMG-G, EFF1 & EFF2	-	96847130	-	-	96810023
300	250	450	6	45	45	280S	Siemens, MMG-E	-	96847130	-	-	96306485
300	250	450	6	45	45	250M	MMG-G, EFF1 & EFF2	-	96847130	-	-	96810023
300	250	450	6	55	55	280M	Siemens, MMG-E	-	96847130	-	-	96306485
300	250	450	6	55	55	280S	MMG-G, EFF1 & EFF2	-	96847130	-	-	96306486
300	250	450	6	-	75	315S	Siemens, MMG-E	-	96847130	-	-	96306486
300	250	450	6	-	75	280M	MMG-G, EFF1 & EFF2	-	96847130	-	-	96306486

Pump type			Motor					Stub shaft	Split shaft			Motor bush
			Poles	Power [kW]		Frame size	Make	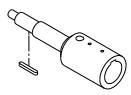	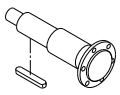			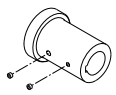
								Material code				
				50 Hz	60 Hz			A, B, C, D, E, F, G, H, S	A, B, C, D, E, F, G, H, S	K, M, N, P	I, J, L, R , T, U, W	
300	250	450	6	-	90	315M	Siemens, MMG-E	-	96847130	-	-	96306486
300	250	450	6	-	90	315S	MMG-G, EFF1 & EFF2	-	96847130	-	-	96306487
300	250	450	6	-	110	315L	Siemens, MMG-E	-	96847130	-	-	96306486
300	250	450	6	-	110	315M	MMG-G, EFF1 & EFF2	-	96847130	-	-	96306487
300	250	500	4	160	-	315L	Siemens, MMG-E	-	96847130	-	-	96306486
300	250	500	4	160	-	315M	MMG-G, EFF1 & EFF2	-	96847130	-	-	96306487
300	250	500	4	200	-	315L	Siemens, MMG-E	-	96847130	-	-	96306486
300	250	500	4	200	-	315M	MMG-G, EFF1 & EFF2	-	96847130	-	-	96306487
300	250	500	4	-	288	315	Siemens	-	96847130	-	-	96306487
300	250	500	4	-	250	355M	MMG-E	-	96847130	-	-	96810026
300	250	500	4	-	250	315C	MMG-G, EFF1 & EFF2	-	96847130	-	-	96810026
300	250	500	4	-	362	315	Siemens	-	96847130	-	-	96306487
300	250	500	4	-	315	355L	MMG-E	-	96847130	-	-	96810026
300	250	500	4	-	408	355	Siemens	-	96847130	-	-	96810026
300	250	500	4	-	460	355	Siemens	-	96847130	-	-	96810026
300	250	500	6	45	-	280S	Siemens, MMG-E	-	96847130	-	-	96306485
300	250	500	6	45	-	250M	MMG-G, EFF1 & EFF2	-	96847130	-	-	96810023
300	250	500	6	55	-	280M	Siemens, MMG-E	-	96847130	-	-	96306485
300	250	500	6	55	-	280S	MMG-G, EFF1 & EFF2	-	96847130	-	-	96306486
300	250	500	6	75	75	315S	Siemens, MMG-E	-	96847130	-	-	96306486
300	250	500	6	75	75	280M	MMG-G, EFF1 & EFF2	-	96847130	-	-	96306486
300	250	500	6	90	90	315M	Siemens, MMG-E	-	96847130	-	-	96306486
300	250	500	6	90	90	315S	MMG-G, EFF1 & EFF2	-	96847130	-	-	96306487
300	250	500	6	-	110	315L	Siemens, MMG-E	-	96847130	-	-	96306486
300	250	500	6	-	110	315M	MMG-G, EFF1 & EFF2	-	96847130	-	-	96306487
300	250	500	6	-	132	315L	Siemens, MMG-E	-	96847130	-	-	96306486
300	250	500	6	-	132	315M	MMG-G, EFF1 & EFF2	-	96847130	-	-	96306487
300	250	500	6	-	160	315L	Siemens	-	96847130	-	-	96306486
300	250	500	6	-	160	355M	MMG-E	-	96847130	-	-	96306486
300	250	500	6	-	160	315C	MMG-G, EFF1 & EFF2	-	96847130	-	-	96810026

Wear ring

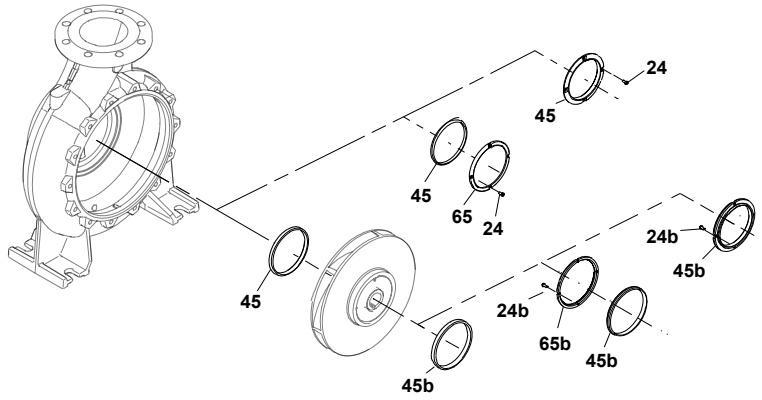

TM044731

Material code: A, B, C, D, E, F, G, H, S, T		Material code: J, N, P, R, W		Material code: I, K, L, M, U	
Pos. 45	**Pos. 45b**	**Pos. 45**	**Pos. 45b**	**Pos. 45**	**Pos. 45b**
45: 1 x wear ring	45b: 1 x wear ring	45: 1 x wear ring 65: 1 x wear ring retainer 24: 4 x screw	45b: 1 x wear ring 65b: 1 x wear ring retainer 24b: 4 x screw	45: 1 x wear ring 24: 4 x screw	45b: 1 x wear ring 24b: 4 x screw

Material code A, B, C, D, E, F, G, H, S, T (pump housing material cast iron)

The material code can be found in the type designation on the nameplate.

NBG 50-32 -125 .1 /142 A -F -A -BAQE

Pump type		Wear ring inner diameter [mm]		Wear ring material			
				Bronze/Brass		GG	
				A, B, C, D, E, F, G, H, S, T		A, B, C, D, E, F, G, H, S, T	
		Pos. 45	Pos. 45b	Pos. 45	Pos. 45b	Pos. 45	Pos. 45b
50-32-	125.1			96810099	-	-	-
	160.1			96810098	-	-	-
	200.1			96810099	-	-	-
	125			96810099	-	-	-
	160			96810099	96810102	-	-
	200			96810099	96810102	-	-
	250			96810099	96810103	-	-
65-50-	125			96810100	96810102	-	-
	160			96810100	96810102	-	-
65-40-	200			96810100	96810102	-	-
	250			96810100	96810103	-	-
	315			96810102	96797628	-	-
80-65-	125			96810102	96810102	-	-
	160			96810102	96810102	-	-
80-50-	200			96810102	96810102	-	-
	250			96810102	96810103	-	-
	315			96810103	96797628	-	-
100-80-	125			96810103	96810102	-	-
	160			96810103	96810104	-	-

Pump type		Wear ring inner diameter [mm]		Wear ring material			
				Bronze/Brass		GG	
				A, B, C, D, E, F, G, H, S, T		A, B, C, D, E, F, G, H, S, T	
		Pos. 45	Pos. 45b	Pos. 45	Pos. 45b	Pos. 45	Pos. 45b
100-65-	200			*96810103*	*96810104*	-	-
	250			*96810105*	*96797628*	-	-
	315			*96810105*	*96797628*	-	-
125-80-	160			*96810106*	*96810104*	-	-
	200			*96797626*	*96797628*	-	-
	250			*96797626*	*96797628*	-	-
	315			*96797626*	*96797628*	-	-
	400			*96797628*	*96810109*	-	-
125-100-	160			*96810107*	*96810104*	-	-
	200	174	154	*96810108*	*96797628*	-	-
	200	154	154	*96797628*	*96797628*	-	-
	250			*96797628*	*96797628*	-	-
	315			*96797628*	*96797628*	-	-
	400			*96810109*	*96810109*	-	-
150-125-	200			*96810108*	*96797628*	-	-
	250			*96810109*	*96810109*	-	-
	315			*96810109*	*96797628*	-	-
	400			*96810109*	*96810109*	-	-
	500			*96810109*	*96810112*	-	-
200-150-	200			*96810110*	*96810109*	-	-
	250	210	185	*96810111*	*96810109*	-	-
	250	185	185	*96810109*	*96810109*	-	-
	315.1			*96810111*	*96810112*	-	-
	315.2			*96810111*	*96810112*	-	-
	315			*96810111*	*96810112*	-	-
	400			*96810112*	*96810112*	-	-
	500			*96810112*	*96810112*	-	-
250-200-	400			*96939611*	*96939611*	*96939606*	*96939609*
	450			*96939612*	*96939612*	*96939607*	*96939607*
300-250-	350			*96939613*	*96939615*	*96939608*	*96939607*
	400			*96939615*	*96939615*	*96939607*	*96939607*
	450			*96939614*	*96939614*	*96939607*	*96939607*
	500			*96939615*	*96939615*	*96939610*	*96939610*

Note: Oversize pumps use the same wear ring as standard pumps.

Material code I, J, K, L, M, N, P, R, W, U (pump housing material 1.4517 and 1.4408)

Pump type		Wear ring inner diameter [mm]		Material code	J, N, P, R, W				I, K, L, M, U			
				ACS approval	-		-		-		Yes	
				Wear ring material	Carbon-graphite-filled PTFE		Carbon-graphite-filled PTFE		1.4517		1.4517	
				Screw	1.4539		1.4401		1.4539		1.4401	
		Pos. 45	Pos. 45b		Pos. 45	Pos. 45b	Pos. 45	Pos. 45b	Pos. 45	Pos. 45b	Pos. 45	Pos. 45b
	125.1				96810113	96774200	96810114	96810117	96810134	96810138	96810135	96810139
	160.1				97939262	96774200	97939263	96810117	97939264	96810138	97939265	96810139
	200.1				97939262	96774200	97939263	96810117	97939264	96810138	97939265	96810139
50-32 -	125				96810113	96774200	96810114	96810117	96810134	96810138	96810135	96810139
	160				96810113	96774200	96810114	96810117	96810134	96810138	96810135	96810139
	200				96810113	96774200	96810114	96810117	96810134	96810138	96810135	96810139
	250				96810113	96810120	96810114	96810121	96810134	96810142	96810135	96810143
65-50-	125				96774200	96774200	96810117	96810117	96810138	96810138	96810139	96810139
	160				96810115	96774200	96810116	96810117	96810136	96810138	96810137	96810139
	200				96810115	96774200	96810116	96810117	96810136	96810138	96810137	96810139
65-40-	250				96810115	96810120	96810116	96810121	96810136	96810142	96810137	96810143
	315				96774200	96810130	96810117	96810131	96810138	96810152	96810139	96810153
80-65-	125				96810120	96774200	96810121	96810117	96810142	96810138	96810143	96810139
	160				96774200	96774200	96810117	96810117	96810138	96810138	96810139	96810139
	200				96774200	96774200	96810117	96810117	96810138	96810138	96810139	96810139
80-50-	250				96774200	96810120	96810117	96810121	96810138	96810142	96810139	96810143
	315				96810120	96810130	96810121	96810131	96810142	96810152	96810143	96810153
100-80-	125				96810120	96774200	96810121	96810117	96810142	96810138	96810143	96810139
	160				96810120	96810124	96810121	96810125	96810142	96810146	96810143	96810147
	200				96810113	96810120	96810114	96810121	96810134	96810142	96810135	96810143
100-65-	250				96810124	96810130	96810125	96810131	96810146	96810152	96810147	96810153
	315				96810124	96810130	96810125	96810131	96810146	96810152	96810147	96810153
	160				96810124	96810128	96810125	96810129	96810146	96810150	96810147	96810151
	200				96810113	96810130	96810114	96810121	96810134	96810142	96810135	96810143
125-80-	250				96810124	96810130	96810125	96810131	96810146	96810152	96810147	96810153
	315				96810128	96810130	96810129	96810131	96810150	96810152	96810151	96810153
	400.1				96810128	96810132	96810129	96810133	96810150	96810154	96810151	96810155
	400				96810128	96810132	96810129	96810133	96810150	96810154	96810151	96810155
	160				96810118	96810124	96810119	96810125	96810148	96810146	96810149	96810147
	200				96810130	96810130	96810131	96810131	96810152	96810152	96810153	96810153
125-100-	250				96810130	96810130	96810131	96810131	96810152	96810152	96810153	96810153
	315				96810130	96810130	96810131	96810131	96810152	96810152	96810153	96810153
	400				96810132	96810132	96810133	96810133	96810154	96810154	96810155	96810155
	200	174	154		97939252	96810130	97939253	96810131	97939254	96810152	97939255	96810153
	200	154	154		96810130	96810130	96810131	96810131	96810152	96810152	96810153	96810153
	250				96810132	96810132	96810133	96810133	96810154	96810154	96810155	96810155
150-125-	315				96810132	96810130	96810133	96810131	96810154	96810152	96810155	96810153
	400				96810132	96810132	96810133	96810133	96810154	96810154	96810155	96810155
	500				96810132	96810132	96810133	96810133	96810154	96810154	96810155	96810155
	200				97939256	96810132	97939257	96810133	97939258	96810154	97939259	96810155
	250	210	185		96887266	96810132	96887264	96810133	96887262	96810154	96887255	96810155
	250	185	185		96810132	96810132	96810133	96810133	96810154	96810154	96810155	96810155
	315.1				97739720	96887266	97739719	96887264	97739717	96887262	97739700	96887255
200-150-	315.2				97739720	96887266	97739719	96887264	97739717	96887262	97739700	96887255
	315				97739720	96887266	97739719	96887264	97739717	96887262	97739700	96887255
	400				97739720	97739720	97739719	97739719	97739717	97739717	97739700	97739700
	500				97739720	97739720	97739719	97739719	97739717	97739717	97739700	97739700

Pump type		Wear ring inner diameter [mm]		Material code	J, N, P, R, W				I, K, L, M, U			
				ACS approval	-		-		-		Yes	
				Wear ring material	Carbon-graphite-filled PTFE		Carbon-graphite-filled PTFE		1.4517		1.4517	
				Screw	1.4539		1.4401		1.4539		1.4401	
		Pos. 45	Pos. 45b		Pos. 45	Pos. 45b	Pos. 45	Pos. 45b	Pos. 45	Pos. 45b	Pos. 45	Pos. 45b
250-200-	400				-	-	-	-	-	-	-	-
	450				-	-	-	-	-	-	-	-
300-250-	350				-	-	-	-	-	-	-	-
	400				-	-	-	-	-	-	-	-
	450				-	-	-	-	-	-	-	-
	500				-	-	-	-	-	-	-	-

Impeller

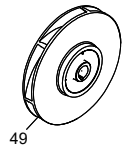

Find the impeller in Grundfos Product Center, and contact your local sales company.

Nut, washer and key for impeller

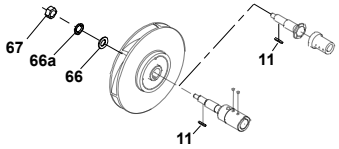

TM044730

Material code: A, B, C, D, E, F, G, H, K, M, N, P, S	Material code: I, J, L, R, T, U, W
11:1 x key	11:1 x key
67:1 x nut	67:1 x nut
66a:1 x lock washer	66a:1 x lock washer
66:1 x washer	66:1 x washer

The material code can be found in the type designation on the nameplate.

NBG 50-32 -125 .1 /142 A -F -A -BAQE

Pump type		Shaft seal dia.	Material code	
			A, B, C, D, E, F, G, H, K, M, N, P, S	I, J, L, R, T, U, W
50-32-	125.1	28	96939128	96939129
	160.1	28	96939128	96939129
	200.1	28	96939128	96939129
	125	28	96939128	96939129
	160	28	96939128	96939129
	200	28	96939128	96939129
	250	38	96939130	96939131
65-50-	125	28	96939128	96939129
	160	28	96939128	96939129
65-40-	200	28	96939128	96939129
	250	38	96939130	96939131
	315	38	96939130	96939131
80-65-	125	28	96939128	96939129
	160	28	96939128	96939129
80-50-	200	28	96939128	96939129
	250	38	96939130	96939131
	315	38	96939130	96939131
100-80-	125	28	96939128	96939129
	160	38	96939130	96939131
100-65-	200	38	96939130	96939131
	250	38	96939130	96939131
	315	48	96939132	96939133
125-80-	160	38	96939130	96939131
	200	38	96939130	96939131
	250	38	96939130	96939131
	315	48	96939132	96939133
	400.1	48	96939132	96939133
	400	48	96939132	96939133
	400 [1)]	55	96939134	96939135
125-100-	160	38	96939130	96939131
	200	38	96939130	96939131
	250	48	96939132	96939133
	315	48	96939132	96939133
	400	48	96939132	96939133
150-125-	200	38	96939130	96939131
	250	48	96939132	96939133
	315	48	96939132	96939133
	400	48	96939132	96939133
	500	60	96939137	96939138
200-150-	200	38	96939130	96939131
	250	48	96939132	96939133
	315.1	55	96939134	96939135
	315.2	55	96939134	96939135
	315	55	96939134	96939135
	400	55	96939134	96939135
	500	60	96939137	96939138
250-200-	400	55	96939134	96939135
	450	55	96939134	96939135
300-250-	350	55	96939134	96939135
	400	55	96939134	96939135
	450	60	96939137	96939138
	500	60	96939137	96939138

1) For 2-pole model only.

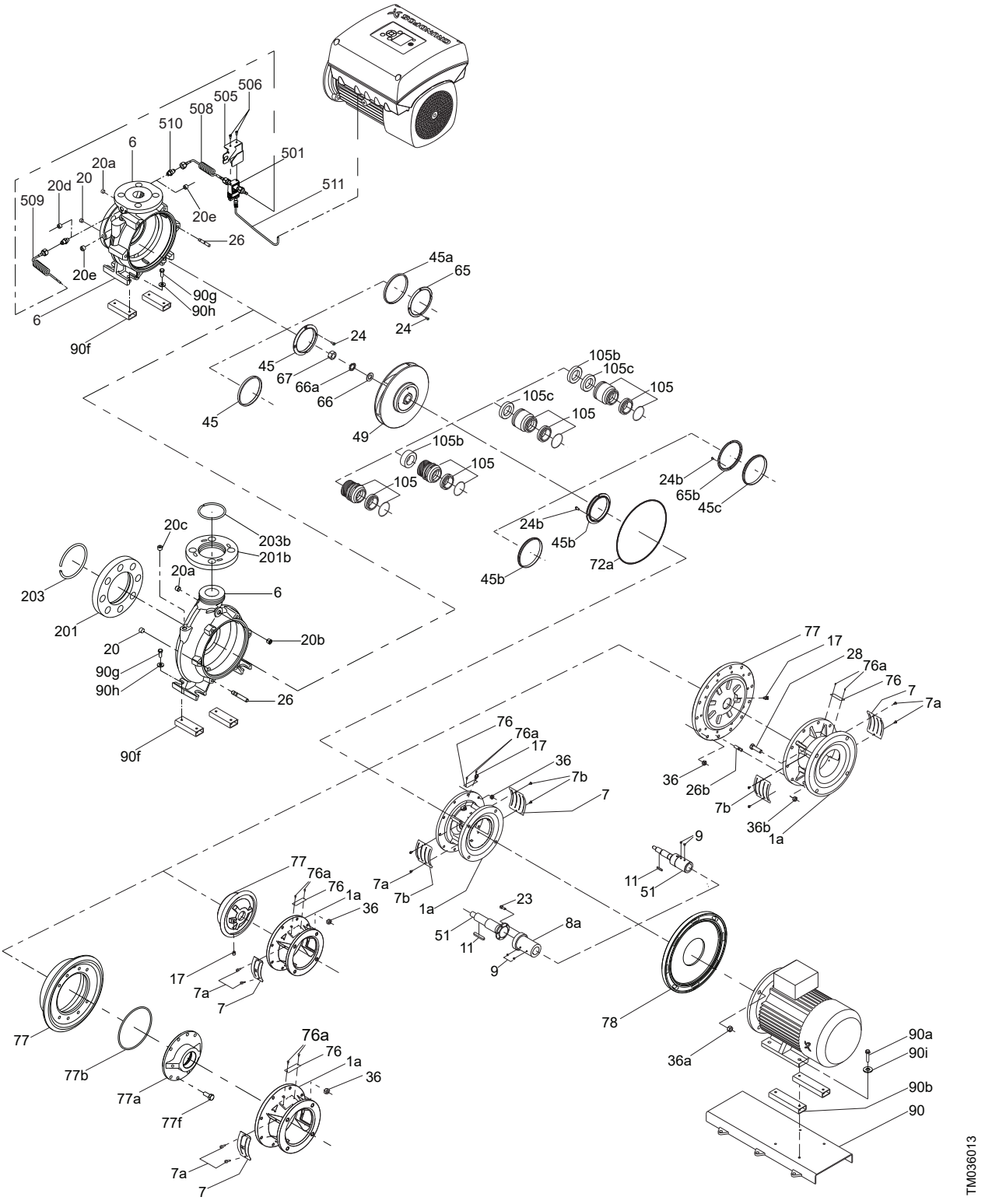

Exploded view

57. NBS, NBSE (60 Hz)

Overview of service kits and spares

Description	Chapter
Kit - Pump housing	*58.1 Kit - Pump housing*
Kit/spare - Wear ring	*58.2 Kit/spare - Wear ring*
Kit - Nut, washer and key for impeller	*58.3 Kit - Nut, washer and key for impeller*
Spare - Impeller	*58.4 Spare - Impeller*
Spare/bulk - Shaft seal and spacer	*58.5 Spare/bulk - Shaft seal and spacer*
Spare/bulk - O-ring for cover and seal cover	*58.6 Spare/bulk - O-ring for cover and seal cover*
Kit/spare - Cover	*58.7 Kit/spare - Cover*
Kit - Seal cover	*58.8 Kit - Seal cover*
Kit - Flushing line	*58.9 Kit - Flushing line*
Spare - Flow control adapter	*58.10 Spare - Flow control adapter*
Kit - Shaft	*58.11 Kit - Shaft*
Spare - Key, coupling (pump side)	*58.12 Spare - Key, coupling (pump side)*
Kit - Split coupling	*58.13 Kit - Split coupling*
Kit - Motor stool	*58.14 Kit - Motor stool*
Kit - Coupling guard	*58.15 Kit - Coupling guards*
Pump nameplate	*58.16 Pump nameplate*
Kit - Plugs for seal cover and motor stool	*58.17 Kit - Plugs for seal cover and motor stool*
Kit - Fork tool (positioning tool for shaft)	*58.18 Kit - Fork tool (positioning tool for pump shaft)*
Kit - Loose flange	*58.19 Kit - Loose flange*
Kit - Support rails under pump	*58.20 Kit - Support rails under pump*
Kit - Support rails under motor	*58.21 Kit - Support rails under motor*
Kit - Differential pressure sensor	*58.22 Kit - Sensor for NBSE Series 2000*
Spare - Bracket for sensor	
Kit - Sensor capillary tube	
Spare - Sensor cable	

Nameplate

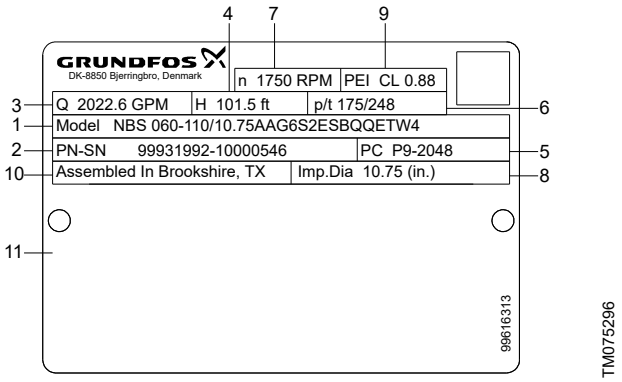

Example of NBS nameplate

Pos.	Description
1	Type designation
2	Product number and production serial number
3	Flow
4	Head
5	Production code
6	Pressure and temperature
7	Pump speed
8	Impeller diameter
9	PEI CL: Pump Energy Index, constant load
	PEI VL: Pump Energy Index, variable load
10	Place of production
11	Field for approval marks and associated texts

Type key

Example 1: NBS 025-095/08.43AAEG6S3ESBQQETX2
Example 2: NBS 040-150/16.77AFEG7TBESDQQE1X4
Example 3: NBS 060-135/1291-1276AAEG7TBESDQQEWX4
Example 4: NBSE 025-110/11.02ASFEG6S2ESBQQENDA
Example 5: NBSE 030-110/1094-1063ACAEG7S7FSDAQFODA

Pos.	1	2	3	4	5	6	7	8	9	10	11	12	13	14	15	16	17
Example 1	NBS	025	-095	/8.43		A		AE	G	6	S3	E	S	BQQE	T	X	2
Example 2	NBS	040	-150	/16.77		A		FE	G	7	TB	E	S	DQQE	1	X	4
Example 3	NBS	060	-135	/1291-1276		A		AE	G	7	TB	E	S	DQQE	W	X	4
Example 4	NBSE	025	-110	/11.02		A	S	FE	G	6	S2	E	S	BQQE	N	D	A
Example 5	NBSE	030	-110	/1094-1063		A	C	AE	G	7	S7	F	S	DAQF	O	D	A

Pos.	Explanation
1	Type range
2	Nominal diameter of outlet port (DN)
3	Nominal impeller diameter [inch]
4	Actual impeller diameter [inch]
5	**Impeller type** 'blank': Closed impeller, cylindrical trim. If one dimension is shown, the impeller has a cylindrical trim, for example 11.02 'blank': Closed impeller, conical trim. If two dimensions are shown, the impeller has a conical trim, for example 1094-1063 S: Special open impeller V: Super vortex impeller
6	**Hydraulic version** A: 1st version B: 2nd version C: 3rd version D: 4th version
7	**Sensor version** 'blank': Pump without sensor C: Without built-in sensor, one cable and one pressure sensor are supplied with the pump S: Pump with built-in differential-pressure sensor, Series 2000
8	**Code for pump version; the codes may be combined** A: Basic version B: Oversize motor C: Without motor (+E): With ATEX approval, certificate or test report, the second character of the code for pump version is an E F: Design with base frame (+S): With support rails, the second character of the pump version code is an S X: Special version; used in case of further customisation than already listed
9	**Pipe connection** G: ANSI flange
10	**Flange pressure rating (PN - rated pressure)** 5: Other pressure rating 6: Class 125, 175 PSI 7: Class 300, 363 PSI

Pos.	Explanation				
	Code for materials				
	Code	Pump housing	Impeller	Wear ring	Shaft
	S2	A48 Class 35	304	No wear ring	420
	S3	A48 Class 35	304	No wear ring	304
	S4	A48 Class 35	304	No wear ring	316
	S5	A48 Class 35	304	No wear ring	SAF 2205
	S6	A48 Class 35	316	No wear ring	420
	S7	A48 Class 35	316	No wear ring	304
	S8	A48 Class 35	316	No wear ring	316
	S9	A48 Class 35	316	No wear ring	SAF 2205
11	SA	70-50-05	304	No wear ring	420
	SB	70-50-05	304	No wear ring	304
	SC	70-50-05	304	No wear ring	316
	SD	70-50-05	304	No wear ring	SAF 2205
	SE	70-50-05	316	No wear ring	420
	SF	70-50-05	316	No wear ring	304
	SG	70-50-05	316	No wear ring	316
	SH	70-50-05	316	No wear ring	SAF 2205
	T2	A48 Class 35	CD4MCuN/A890	No wear ring	SAF 2205
	TA	70-50-05	CD4MCuN/A890	No wear ring	SAF 2205
	X	Special version			
12	**Rubber parts in pump** E: EPDM F: FXM (Fluoraz®) K: FFKM (Kalrez®) M: FEPS (PTFE-sheathed silicone O-ring) O: HNBR V: FKM (Viton®)				
13	**Shaft seal arrangement** S: Single seal				
14	**Shaft seal in pump** Letter code for mechanical shaft seal and shaft seal rubber parts. See section Letter codes for shaft seals.				
15	Code for rated motor power [kW]. See section Codes for rated motor power.				
16	Code for phase and voltage [V] or other information. See section Codes for phase and voltage or other information.				
17	Code for speed variant [rpm]. See section Codes for speed variant.				

Related information

Letter codes for shaft seals
Codes for rated motor power
Codes for phase and voltage or other information
Codes for speed variant

Letter codes for shaft seals

Pos. 14 in NBS type key example.

Code example	Description	Code explanation
B	Shaft seal type	A: O-ring seal with fixed driver B: Rubber bellows seal D: O-ring seal, balanced H: Cartridge seal, balanced
Q	Material of rotating seal face	A: Carbon, metal-impregnated with antimony which is not approved for potable water B: Carbon, resin-impregnated Q: Silicon carbide
Q	Material of stationary seal	A: Carbon, metal-impregnated with antimony which is not approved for potable water Q: Silicon carbide
E	Material of secondary seal and other rubber and composite parts, except the wear ring	E: EPDM V: FKM (Viton®) F: FXM (Fluoraz®) K: FFKM (Kalrez®) X: HNBR U: Dynamic O-rings in FFKM and static O-rings in PTFE

Codes for rated motor power

Pos. 15 in NBSE, NBS type key example.

Code	Description	
	[hp]	[kW]
A	0.16	0.12
B	0.25	0.18
C	0.33	0.25
D	0.5	0.37
E	0.75	0.55
F	1	0.75
G	1.5	1.1
H	2	1.5
I	3	2.2
J	4	3
K	5 (5.5 [1)])	3.7 (4 [1)])
L	7.5	5.5
M	10	7.5
N	15	11
O	20	15
P	25	18.5
Q	30	22
R	40	30
S	50	37
T	60	45
U	75	55
V	100	75
W	125	90
X	Bare pump	
Y	> 200 [2)]	> 150 [2)]
1	150	110
2	175	132
3	200	150
4	215 [3)]	160
5	250 [3)]	185

1) Value in bracket is for the standard IEC motor size. Value outside bracket is for the motor size according to NEMA standards.

2) Used for pumps where the pump shaft input power exceeds 200 hp (150 kW) and is not regulated under the DOE pump rule.

3) Special cases with power sizes above 200 hp (150 kW) which are still regulated under the DOE pump rule. For example: Pump has a P2 value of 198 hp (147.6 kW) in its duty point (in DOE scope) but customer wants the 215 hp (160 kW) motor instead of the 200 hp (150 kW). The pump is in scope of the DOE regulation and requires a PEI value and a motor code.

Codes for phase and voltage or other information

Pos. 17 in NB, NBG type key example.
Pos. 17 in NK, NKG type key example.
Pos. 17 in NBG, NBGE, NKG, NKGE type key example.
Pos. 13 in TP, TPD type key example.
Pos. 16 in NBS, NBSE type key example.
Pos. 16 in NK type key example.
Pos. 16 in NB, NBE, NK, NKE type key example.

Code	Description
A	E-motor (ECM [1]), 1 x 200-240 V
B	E-motor (ECM [1]), 3 x 200-240 V
C	E-motor (ECM [1]), 3 x 440-480 V
D	E-motor (ECM [1]), 3 x 380-500 V
W	Not for sale in North America
X	No motor or US DOE regulated motor (CC marked motor)
Y	Out of DOE scope
Z	E-motor, asynchronous motor

1 ECM: Electronically Commutated Motor.

Codes for speed variant

Pos. 17 in NBSE, NBS type key example.

Code	Description
A	1450-2200 RPM, E-motor (ECM [1)])
B	2900-4000 RPM, E-motor (ECM [1)])
C	4000-5900 RPM, E-motor (ECM [1)])
1	2-pole, 50 Hz (Asynchronous motor)
2	2-pole, 60 Hz (Asynchronous motor)
3	4-pole, 50 Hz (Asynchronous motor)
4	4-pole, 60 Hz (Asynchronous motor)
5	6-pole, 50 Hz (Asynchronous motor)
6	6-pole, 60 Hz (Asynchronous motor)
7	8-pole, 50 Hz (Asynchronous motor)
8	8-pole, 60 Hz (Asynchronous motor)

1) ECM: Electronically Commutated Motor.

58. Service kits and spares

Kit - Pump housing

Cast iron, low pressure (Class 125)

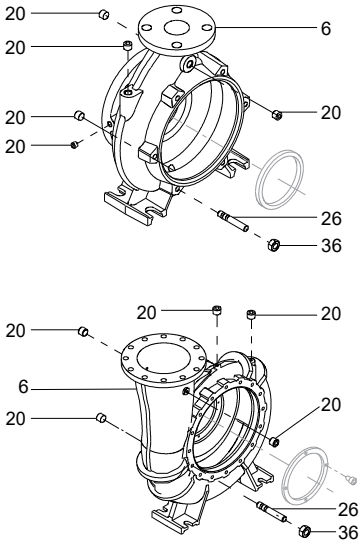

TM078535

Kit, pump housing, cast iron low pressure (Class 125)
6: 1 x pump housing
26: Needed number of stay bolts
36: Nuts for stay bolts
20e: Plugs (for filling, draining, flushing, and pressure outtake)

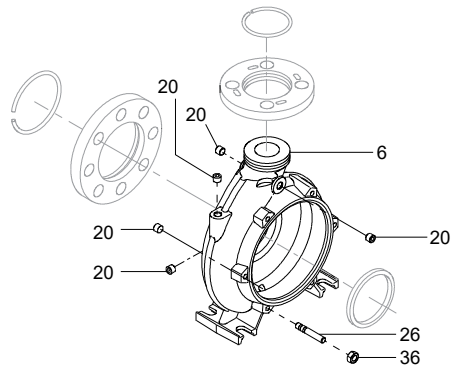

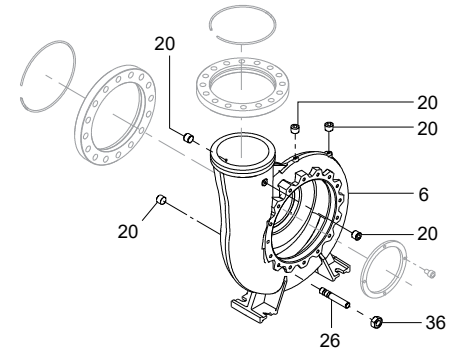

TM078536

Cast iron, high pressure (Class 300)

Kit, pump housing, cast iron low pressure (Class 300)
6: 1 x pump housing
26: Needed number of stay bolts
36: Nuts for stay bolts
20e: Plugs (for filling, draining, flushing, and pressure outtake)

1. Check pressure code	Pump rated pressure, see pos.10 in type key								
	Low pressure (Class 125) = code 6					High pressure (Class 300) = code 7			
2. Check original surface color of wetted parts	Brownish-red primer		Sand blasted metal	Green coating		Brownish-red primer		Sand blasted metal	Green coating	
3. Check approval mark on pump nameplate	No approval mark		NSF compli-ant	NSF compliant		No approval mark		NSF compli-ant	NSF compliant	
Pump size	Without wear ring	With wear ring [1]	Without wear ring		With wear ring	Without wear ring	With wear ring [1]	Without wear ring		With wear ring
NBS 012-070	92521491	92521490	92521493	92521492	On request, please contact Grundfos	92521495	92521494	92521497	92521496	On request, please contact Grundfos
NBS 015-070	92521249	92521248	92521251	92521250		92521254	92521252	92521256	92521255	
NBS 015-090	92521299	92521298	92521301	92521300		92521303	92521302	92521305	92521304	
NBS 015-095	92521291	92521290	92521293	92521292		92521295	92521294	92521297	92521296	
NBS 020-095	92521307	92521306	92521309	92521308		92521311	92521310	92521313	92521312	
NBS 020-110	92521355	92521354	92521357	92521356		92521359	92521358	92521361	92521360	
NBS 020-135	92521403	92521402	92521405	92521404		92521407	92521406	92521409	92521408	
NBS 025-070	92521267	92521266	92521269	92521268		92521271	92521270	92521273	92521272	
NBS 025-095	92521315	92521314	92521317	92521316		92521319	92521318	92521321	92521320	
NBS 025-110	92521363	92521362	92521365	92521364		92521367	92521366	92521369	92521368	
NBS 030-070	92521275	92521274	92521277	92521276		92521279	92521278	92521281	92521280	
NBS 030-095	92521323	92521322	92521325	92521324		92521327	92521326	92521329	92521328	
NBS 030-110	92521371	92521370	92521373	92521372		92521375	92521374	92521377	92521376	
NBS 030-135	92521411	92521410	92521413	92521412		92521415	92521414	92521417	92521416	
NBS 040-070	92521283	92521282	92521285	92521284		92521287	92521286	92521289	92521288	
NBS 040-095	92521331	92521330	92521333	92521332		92521335	92521334	92521337	92521336	
NBS 040-110	92521379	92521378	92521381	92521380		92521383	92521382	92521385	92521384	
NBS 040-135	92521419	92521418	92521421	92521420		92521423	92521422	92521425	92521424	
NBS 040-150	92521451	92521450	92521453	92521452		92521455	92521454	92521457	92521456	
NBS 050-070	92521258	92521257	92521261	92521260		92521263	92521262	92521265	92521264	
NBS 050-095	92521339	92521338	92521341	92521340		92521343	92521342	92521345	92521344	
NBS 050-110	92521387	92521386	92521389	92521388		92521391	92521390	92521393	92521392	
NBS 050-135	92521427	92521426	92521429	92521428		92521431	92521430	92521433	92521432	
NBS 050-150	92521459	92521458	92521461	92521460		92521463	92521462	92521465	92521464	
NBS 060-095	92521347	92521346	92521349	92521348		92521351	92521350	92521353	92521352	
NBS 060-110	92521395	92521394	92521397	92521396		92521399	92521398	92521401	92521400	
NBS 060-135	92521435	92521434	92521437	92521436		92521439	92521438	92521441	92521440	
NBS 060-150	92521467	92521466	92521469	92521468		92521471	92521470	92521473	92521472	
NBS 080-135	92521443	92521442	92521445	92521444		92521447	92521446	92521449	92521448	
NBS 080-150	92521475	92521474	92521477	92521476		92521479	92521478	92521481	92521480	
NBS 100-150	92521483	92521482	92521485	92521484		92521487	92521486	92521489	92521488	

[1] The kit pump housing is machined and prepared for mounting a wear ring. The wear ring should be ordered separately, see kit/spare wear ring section.

Kit/spare - Wear ring

Press fitted

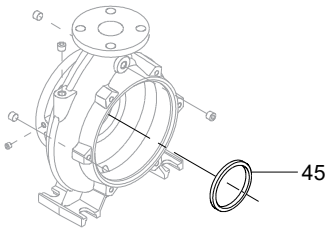

TM078537

Spare, wear ring

45: 1 x wear ring

Screw fitted

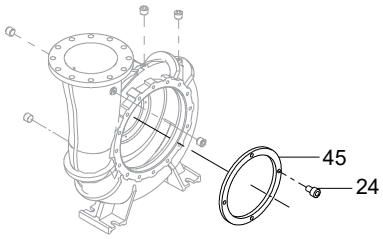

TM080477

Kit, wear ring

45: 1 x wear ring

24: 4 x socket head cap screw

Pump size	Pole			Wear ring dimensions [mm]	Pump material code					
					x		x		x	
					Wear ring material					
					Brass		Bronze		Cast iron	
	2	4	6		Spare	Kit	Spare	Kit	Spare	Kit
NBS 012-070	•			D63/D77x10	99208775	-	96810098	-	96810122	-
		•		D63/D77x10	99208775	-	96810098	-	96810122	-
NBS 015-070	•			D90/D104x10	99208821	-	96810100	-	96810126	-
		•		D90/D104x10	99208821	-	96810100	-	96810126	-
NBS 015-090	•			D76/D90x10	99208825	-	96810099	-	96810123	-
		•		D76/D90x10	99208825	-	96810099	-	96810123	-
NBS 015-095	•			D76/D90x10	99208825	-	96810099	-	96810123	-
		•		D76/D90x10	99208825	-	96810099	-	96810123	-
NBS 020-095	•			D112/D126x10	99208818	-	96810103	-	96810141	-
		•		D112/D126x10	99208818	-	96810103	-	96810141	-
NBS 020-110		•		D95/D109x10	99850309	-	99850307	-	99850308	-
NBS 020-135		•		D95/D109x10	99850309	-	99850307	-	99850308	-
NBS 025-070	•			D90/D104x10	99208821	-	96810100	-	96810126	-
		•		D90/D104x10	99208821	-	96810100	-	96810126	-
NBS 025-095	•			D100/D114x10	99208819	-	96810102	-	96810140	-
		•	•	D100/D114x10	99208819	-	96810102	-	96810140	-
NBS 025-110		•	•	D100/D114x10	99208819	-	96810102	-	96810140	-
NBS 030-070	•			D112/D126x10	99208818	-	96810103	-	96810141	-
		•		D112/D126x10	99208818	-	96810103	-	96810141	-
NBS 030-095	•			D112/D126x10	99208818	-	96810103	-	96810141	-
		•	•	D112/D126x10	99208818	-	96810103	-	96810141	-
NBS 030-110		•	•	D112/D126x10	99208818	-	96810103	-	96810141	-
NBS 030-135		•	•	D122/D138x13	99208813	-	96810105	-	96939586	-
NBS 040-070	•			D122/D136x10	99208817	-	96810104	-	96939585	-
		•	•	D122/D136x10	99208817	-	96810104	-	96939585	-
NBS 040-095	•			D130/D144x10	99208815	-	96810106	-	96939587	-
		•	•	D130/D144x10	99208815	-	96810106	-	96939587	-
NBS 040-110		•	•	D130/D146x13	99208810	-	96797626	-	96939588	-
NBS 040-135		•	•	D144/D158x15	99208748	-	96810107	-	96939589	-
NBS 040-150		•	•	D174/D188x15	99208745	-	96810108	-	96939591	-
NBS 050-070	•			D144/D158x15	99208748	-	96810107	-	96939589	-
		•	•	D144/D158x15	99208748	-	96810107	-	96939589	-
NBS 050-095		•	•	D174/D188x15	99208745	-	96810108	-	96939591	-
NBS 050-110		•	•	D154/D168x15	99208807	-	96797628	-	96939590	-
NBS 050-135		•	•	D154/D168x15	99208807	-	96797628	-	96939590	-
NBS 050-150		•	•	D185/D199x15	99208792	-	96810109	-	96939602	-
NBS 060-095		•	•	D185/D199x15	99208792	-	96810109	-	96939602	-
NBS 060-110		•	•	D185/D199x15	99208792	-	96810109	-	96939602	-

Pump size	Pole			Wear ring dimensions [mm]	Pump material code					
					x		x		x	
					Wear ring material					
					Brass		Bronze		Cast iron	
	2	4	6		Spare	Kit	Spare	Kit	Spare	Kit
NBS 060-135		•	•	D200/D214x15	*99208786*	-	*96810110*	-	*96939603*	-
NBS 060-150		•	•	D210/D224x15	*99208749*	-	*96810111*	-	*96939604*	-
NBS 080-135		•	•	D224/D238x15	*99208743*	-	*96810112*	-	*96939605*	-
NBS 080-150		•	•	D222/D272x15	-	*96939611*	-	-	-	*96939606*
NBS 100-150		•	•	D240/D290x15	-	*96939613*	-	*92526540*	-	*96939608*

Kit - Nut, washer and key for impeller

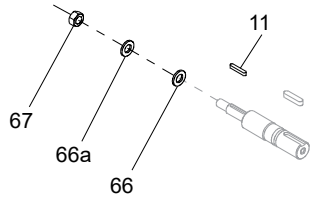

TM078538

Kit, nut, washer and key for impeller
11: 1 x key
67: 1 x hex nut
66a: 1 x lock washer
66: 1 x washer

Pump size	Pole			Pump material code		
				S2, S3, S6, S7, SA, SB, SE, SF	S4, S8, SC, SG	S5, S9, SD, SH
				Nut, washer and key material		
	2	4	6	304 (1.4301)	316 (1.4401)	904 (1.4462)
NBS 012-070	•			92521562	92521567	92521572
		•		92521562	92521567	92521572
NBS 015-070	•			92521559	96939128	96939129
		•		92521562	92521567	92521572
NBS 015-090	•			92521559	96939128	96939129
		•		92521559	96939128	96939129
NBS 015-095	•			92521559	96939128	96939129
		•		92521559	96939128	96939129
NBS 020-095	•			95046322	92521565	96939131
		•		92521559	96939128	96939129
NBS 020-110		•		92521559	96939128	96939129
NBS 020-135		•		95046322	92521565	96939131
NBS 025-070	•			92521559	96939128	96939129
		•		92521562	92521567	92521572
NBS 025-095	•			95046322	92521565	96939131
		•	•	92521559	96939128	96939129
NBS 025-110		•	•	95046322	92521565	96939131
NBS 030-070	•			92521559	96939128	96939129
		•		92521562	92521567	92521572
NBS 030-095	•			95046322	92521565	96939131
		•	•	92521559	96939128	96939129
NBS 030-110		•	•	95046322	92521565	96939131
NBS 030-135		•	•	95046322	92521565	96939131
NBS 040-070	•			92521559	96939128	96939129
		•	•	92521559	96939128	96939129
NBS 040-095	•			95046322	92521565	96939131
		•	•	92521559	96939128	96939129
NBS 040-110		•	•	95046322	92521565	96939131
NBS 040-135		•	•	95046322	92521565	96939131
NBS 040-150		•	•	95046323	96939132	96939133
NBS 050-070	•			92521559	96939128	96939129
		•	•	92521559	96939128	96939129
NBS 050-095		•	•	95046322	92521565	96939131
NBS 050-110		•	•	95046322	92521565	96939131
NBS 050-135		•	•	95046323	96939132	96939133
NBS 050-150		•	•	95046323	96939132	96939133
NBS 060-095		•	•	95046322	92521565	96939131

Pump size	Pole			Pump material code		
				S2, S3, S6, S7, SA, SB, SE, SF	S4, S8, SC, SG	S5, S9, SD, SH
				Nut, washer and key material		
	2	4	6	304 (1.4301)	316 (1.4401)	904 (1.4462)
NBS 060-110		•	•	*95046323*	*96939132*	*96939133*
NBS 060-135		•	•	*95046323*	*96939132*	*96939133*
NBS 060-150		•	•	*92521563*	*96939134*	*96939135*
NBS 080-135		•	•	*95046323*	*96939132*	*96939133*
NBS 080-150		•	•	*92521563*	*96939134*	*96939135*
NBS 100-150		•	•	*92521563*	*96939134*	*96939135*

Spare - Impeller

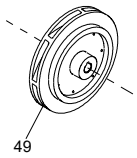

TM078777

Spare, impeller
49: 1 x impeller

When ordering a spare impeller and the required trim falls between one of those mentioned in the overview, please inform Grundfos about the following nameplate data:

- pump type and size (pos.1)
- actual impeller trim, as indicated after the pump size (pos.2)
- product number and production serial number (PN-SN) (pos.3).

See the nameplate and impeller examples below.

This enables Grundfos to produce an exact match of the installed impeller.

Cylindrical trim impeller

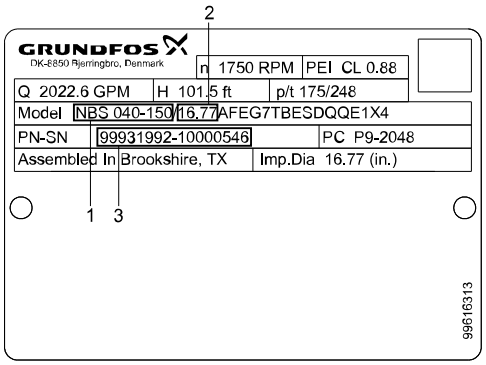

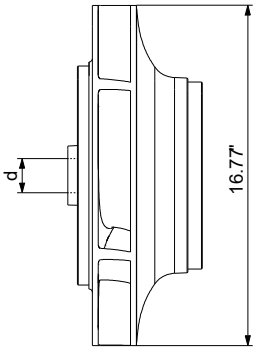

TM078938

TM078940

Angle trim impeller

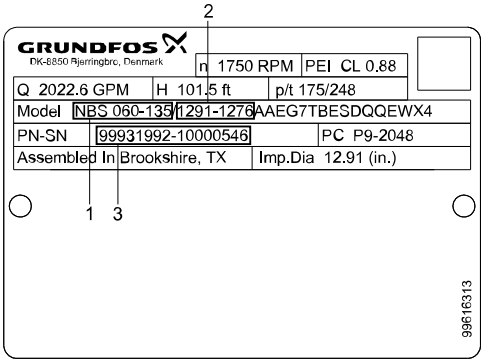

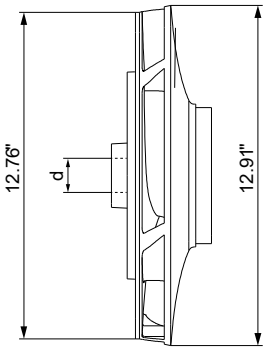

TM078939

TM078941

Pump size	Pole	Actual impeller trim [inch]	P2 [hp]	Pump material code			Impeller bore, d [mm]
				S2, S3, S4, S5, SA, SB, SC, SD	S6, S7, S8, S9, SE, SF, SG, SH	T2, TA	
				Impeller material			
				304 (1.4308)	316 (1.4408)	904 (1.4517)	
NBS 012-070	2	6.97	15	*92526547*	*92526564*	*92553810*	16
	2	6.65	15	*92526548*	*92526565*	*92553811*	16
	2	6.42	10	*92600196*	*92600198*	*92600200*	16
	2	6.10	7.5	*92526549*	*92526566*	*92553812*	16
	2	5.47	7.5	*92526560*	*92526567*	*92553813*	16
	2	5.00	5	*92600195*	*92600197*	*92600199*	16
	2	4.69	3	*92526561*	*92526568*	*92553814*	16
	4	6.97	1.5	*92526547*	*92526564*	*92553810*	16
	4	6.10	1	*92526549*	*92526566*	*92553812*	16
	4	5.71	1	*92526562*	*92526570*	*92553815*	16
	4	5.16	1	*92526563*	*92526571*	*92553816*	16

Pump size	Pole	Actual impeller trim [inch]	P2 [hp]	Pump material code			Impeller bore, d [mm]
				S2, S3, S4, S5, SA, SB, SC, SD	S6, S7, S8, S9, SE, SF, SG, SH	T2, TA	
				Impeller material			
				304 (1.4308)	316 (1.4408)	904 (1.4517)	
NBS 015-070	2	6.93	20	92526572	92526584	92553817	24
	2	6.30	15	92526573	92526585	92553818	24
	2	5.59	10	92526574	92526586	92553819	24
	2	5.04	7.5	92526576	92526587	92553820	24
	2	4.49	5	92526577	92526588	92553821	24
	4	6.93	3	92526578	92526590	92553822	16
	4	6.54	2	92526579	92526591	92553823	16
	4	5.91	1.5	92526580	92526592	92553824	16
	4	5.12	1	92526581	92526593	92553825	16
	4	4.65	1	92526582	92526594	92553826	16
NBS 015-090	2	9.84	40	92526596	92526606	92553827	24
	2	8.82	30	92526597	92526608	92553828	24
	2	8.27	25	92526598	92526609	92553829	24
	2	7.80	20	92526599	92526610	92553830	24
	2	7.09	15	92526600	92526611	92553831	24
	4	9.84	5	92526602	92526612	92553832	24
	4	8.11	3	92526603	92526613	92553833	24
	4	7.24	2	92526604	92526614	92553834	24
	4	6.69	1.5	92526605	92526615	92553835	24
NBS 015-095	2	9.69	50	92526616	92526626	92553836	24
	2	8.82	40	92526617	92526627	92553837	24
	2	7.87	30	92526618	92526628	92553838	24
	2	7.48	25	92526619	92526629	92553839	24
	2	7.01	20	92526620	92526630	92553840	24
	2	6.46	15	92526621	92526631	92553841	24
	4	9.84	7.5	92526622	92526632	92553842	24
	4	8.82	5	92526623	92526633	92553843	24
	4	7.32	3	92526624	92526634	92553844	24
	4	6.54	2	92526625	92526635	92553845	24
NBS 020-095	2	9.45	75	92526636	92526648	92553846	32
	2	8.90	60	92526637	92526649	92553847	32
	2	8.58	50	92526638	92526650	92553848	32
	2	8.03	40	92526639	92526651	92553849	32
	2	7.17	30	92526640	92526652	92553850	32
	2	6.77	25	92526641	92526653	92553851	32
	2	6.30	20	92526642	92526654	92553852	32
	2	5.75	15	92526643	92526655	92553853	32
	4	9.45	7.5	92526644	92526656	92553854	24
	4	8.11	5	92526645	92526657	92553855	24
	4	6.61	3	92526646	92526658	92553856	24
	4	5.83	2	92526647	92526659	92553857	24
NBS 020-110	4	10.31	15	92526660	92526664	92553858	24
	4	9.92	10	92526661	92526665	92553859	24
	4	8.98	7.5	92526662	92526666	92553860	24
	4	8.11	5	92526663	92526667	92553861	24
NBS 020-135	4	13.39-13.23	25	92526668	92526673	92553884	32
	4	12.52	20	92526669	92526674	92553885	32
	4	11.42	15	92526670	92526675	92553886	32
	4	10.16	10	92526671	92526676	92553887	32
	4	9.29	7.5	92526672	92526677	92553888	32

Pump size	Pole	Actual impeller trim [inch]	P2 [hp]	Pump material code			Impeller bore, d [mm]
				S2, S3, S4, S5, SA, SB, SC, SD	S6, S7, S8, S9, SE, SF, SG, SH	T2, TA	
				Impeller material			
				304 (1.4308)	316 (1.4408)	904 (1.4517)	
NBS 025-070	2	6.77	30	92526678	92526689	92553889	24
	2	6.61	25	92526679	92526690	92553890	24
	2	6.30	20	92526680	92526691	92553891	24
	2	5.67	15	92526681	92526692	92553892	24
	2	4.96	10	92526682	92526693	92553893	24
	2	4.57	7.5	92526683	92526694	92553895	24
	4	6.77	5	92526684	92526695	92553896	16
	4	6.61	3	92526685	92526696	92553897	16
	4	5.83	2	92526686	92526697	92553898	16
	4	5.28	1.5	92526687	92526698	92553899	16
	4	4.65	1	92526688	92526699	92553900	16
NBS 025-095	2	9.53	75	92526700	92526714	92553901	32
	2	9.37	75	92526701	92526715	92553902	32
	2	8.43	60	92526702	92526716	92553903	32
	2	7.80	50	92526703	92526717	92553904	32
	2	7.17	40	92526704	92526718	92553905	32
	2	6.30	30	92526705	92526719	92553906	32
	2	5.98	25	92526706	92526720	92553907	32
	4	9.53	10	92526707	92526721	92553908	24
	4	8.43	7.5	92526708	92526722	92553909	24
	4	7.17	5	92526709	92526723	92553910	24
	4	5.98	3	92526710	92526724	92553911	24
	6	9.53	3	92526707	92526721	92553908	24
	6	8.19	2	92526711	92526725	92553912	24
	6	7.17	1.5	92526709	92526723	92553913	24
	6	6.06	1	92526713	92526727	92553914	24
NBS 025-110	4	11.02	15	92526728	92526733	92553915	32
	4	9.45	10	92526729	92526734	92553916	32
	4	8.58	7.5	92526730	92526735	92553917	32
	6	11.02	5	92526728	92526733	92553915	32
	6	9.61	3	92526731	92526736	92553918	32
	6	8.43	2	92526732	92526737	92553919	32
NBS 030-070	2	6.85	40	92526738	92526747	92553920	24
	2	6.30	30	92526739	92526748	92553921	24
	2	5.83	25	92526740	92526749	92553922	24
	2	5.59	20	92526741	92526750	92553923	24
	2	5.04	15	92526742	92526751	92553925	24
	4	6.85	5	92526743	92526752	92553926	16
	4	5.83	3	92526744	92526753	92553927	16
	4	5.20	2	92526745	92526754	92553928	16
	4	4.72	1.5	92526746	92526755	92553929	16

Pump size	Pole	Actual impeller trim [inch]	P2 [hp]	Pump material code			Impeller bore, d [mm]
				S2, S3, S4, S5, SA, SB, SC, SD	S6, S7, S8, S9, SE, SF, SG, SH	T2, TA	
				Impeller material			
				304 (1.4308)	316 (1.4408)	904 (1.4517)	
NBS 030-095	2	8.86	125	92526756	92526768	92553930	32
	2	8.07	100	92526757	92526769	92553931	32
	2	7.36	75	92526758	92526770	92553932	32
	2	6.89	60	92526759	92526771	92553933	32
	2	6.50	50	92526760	92526772	92553934	32
	2	6.10	40	92526761	92526773	92553935	32
	4	8.86	15	92526762	92526774	92553936	24
	4	7.52	10	92526763	92526775	92553937	24
	4	6.73	7.5	92526764	92526776	92553938	24
	4	6.10	5	92526765	92526777	92553939	24
	6	8.86	5	92526762	92526774	92553936	24
	6	7.52	3	92526763	92526775	92553937	24
	6	6.57	2	92526766	92526778	92553940	24
	6	6.02	1.5	92526767	92526779	92553941	24
NBS 030-110	4	10.94-10.63	20	92526780	92526785	92553942	32
	4	9.76-9.45	15	92526781	92526786	92553943	32
	4	8.5-8.19	10	92526782	92526787	92553944	32
	6	10.94-10.63	7.5	92526780	92526785	92553942	32
	6	10.47-10.16	5	92526783	92526788	92553945	32
	6	8.58-8.27	3	92526784	92526789	92553946	32
NBS 030-135	4	12.91	40	92526800	92526807	92553947	32
	4	11.26	30	92526801	92526808	92553948	32
	4	10.63	25	92526802	92526809	92553949	32
	4	9.92	20	92526803	92526810	92553950	32
	4	8.98	15	92526804	92526811	92553951	32
	6	12.91	15	92526800	92526807	92553947	32
	6	11.73	10	92526805	92526812	92553952	32
	6	10.55	7.5	92526806	92526813	92553953	32
	6	8.98	5	92526804	92526811	92553951	32
NBS 040-070	2	6.77	50	92526814	92526827	92553954	24
	2	6.30	40	92526816	92526828	92553955	24
	2	5.75	30	92526817	92526829	92553956	24
	2	5.51	25	92526818	92526830	92553957	24
	2	5.12	20	92526819	92526831	92553958	24
	4	6.85	7.5	92526820	92526832	92553959	24
	4	6.30	5	92526821	92526833	92553960	24
	4	5.43	3	92526822	92526834	92553961	24
	4	5.12-4.33	2	92526823	92526835	92553962	24
	6	6.85	2	92526820	92526832	92553959	24
	6	6.14	1.5	92526824	92526836	92553963	24
	6	5.51	1	92526825	92526837	92553964	24
	6	5.12-4.8	1	92526826	92526838	92553965	24

Pump size	Pole	Actual impeller trim [inch]	P2 [hp]	Pump material code			Impeller bore, d [mm]
				S2, S3, S4, S5, SA, SB, SC, SD	S6, S7, S8, S9, SE, SF, SG, SH	T2, TA	
				Impeller material			
				304 (1.4308)	316 (1.4408)	904 (1.4517)	
NBS 040-095	2	8.35	125	92526839	92526849	92553966	32
	2	7.72	100	92526840	92526860	92553967	32
	2	6.93	75	92526841	92526861	92553968	32
	2	6.46	60	92526842	92526862	92553969	32
	4	9.37	20	92526843	92526863	92553980	24
	4	8.35	15	92526844	92526864	92553981	24
	4	7.09	10	92526845	92526865	92553982	24
	4	6.38	7.5	92526846	92526866	92553983	24
	6	9.37	7.5	92526843	92526863	92553980	24
	6	8.98	5	92526847	92526867	92553984	24
	6	7.09	3	92526845	92526865	92553982	24
	6	6.30	2	92526848	92526868	92553985	24
NBS 040-110	4	10.08	30	92526869	92526876	92553986	32
	4	9.45	25	92526870	92526877	92553987	32
	4	8.74	20	92526871	92526878	92553988	32
	4	8.11	15	92526872	92526879	92553989	32
	6	10.08	10	92526869	92526876	92553986	32
	6	9.37	7.5	92526873	92526880	92553990	32
	6	8.35	5	92526874	92526881	92553991	32
	6	7.17	3	92526875	92526882	92553992	32
NBS 040-135	4	12.83	50	92526883	92526892	92553993	32
	4	11.81	40	92526884	92526893	92553994	32
	4	10.94	30	92526885	92526894	92553996	32
	4	10.24	25	92526886	92526895	92553997	32
	4	9.29	20	92526887	92526896	92553998	32
	6	12.60	15	92526888	92526897	92553999	32
	6	11.18	10	92526889	92526898	92554000	32
	6	10.16	7.5	92526890	92526900	92554001	32
	6	8.74	5	92526891	92526901	92554002	32
NBS 040-150	4	16.77	150	92526902	92526913	92554003	42
	4	16.14	125	92526903	92526914	92554004	42
	4	15.28	100	92526904	92526915	92554005	42
	4	14.02	75	92526905	92526916	92554006	42
	4	13.07	60	92526906	92526917	92554007	42
	4	12.36	50	92526907	92526918	92554008	42
	6	16.69	40	92526908	92526919	92554009	42
	6	15.35	30	92526909	92526920	92554010	42
	6	14.57	25	92526910	92526921	92554011	42
	6	13.46	20	92526911	92526922	92554012	42
	6	12.36	15	92526907	92526918	92554013	42

Pump size	Pole	Actual impeller trim [inch]	P2 [hp]	Pump material code			Impeller bore, d [mm]
				S2, S3, S4, S5, SA, SB, SC, SD	S6, S7, S8, S9, SE, SF, SG, SH	T2, TA	
				Impeller material			
				304 (1.4308)	316 (1.4408)	904 (1.4517)	
NBS 050-070	2	6.93	75	92526924	92526937	92554014	24
	2	6.77	60	92526925	92526938	92554015	24
	2	6.46	50	92526926	92526939	92554016	24
	2	6.06	40	92526927	92526940	92554017	24
	2	5.98-4.88	30	92526928	92526941	92554018	24
	2	5.59-4.49	25	92526929	92526942	92554019	24
	4	6.93	10	92526931	92526944	92554021	24
	4	6.61	7.5	92526932	92526945	92554022	24
	4	6.06	5	92526933	92526946	92554023	24
	4	5.43-4.33	3	92526934	92526947	92554024	24
	6	6.93	3	92526931	92526944	92554021	24
	6	6.61	2	92526932	92526945	92554022	24
	6	6.06	1.5	92526933	92526946	92554023	24
	6	5.91-4.17	1	92526935	92526948	92554025	24
	6	5.28-4.17	1	92526936	92526949	92554026	24
NBS 050-095	4	9.13	30	92526950	92542914	92554027	32
	4	8.74	25	92526951	92542915	92554028	32
	4	8.19	20	92526952	92542916	92554029	32
	4	7.40	15	92526953	92542917	92554030	32
	4	6.85-6.06	10	92542912	92542918	92554031	32
	6	9.13	10	92526950	92542914	92554027	32
	6	8.74	7.5	92526951	92542915	92554028	32
	6	7.72	5	92542913	92542919	92554032	32
	6	6.85-6.06	3	92542912	92542918	92554031	32
NBS 050-110	4	10.63	40	92542920	92542927	92554033	32
	4	9.61	30	92542921	92542928	92554034	32
	4	9.06	25	92542922	92542929	92554036	32
	4	8.35	20	92542923	92542930	92554037	32
	6	10.63	15	92542920	92542927	92554033	32
	6	10.00	10	92542924	92542931	92554038	32
	6	8.90	7.5	92542925	92542932	92554039	32
	6	8.11	5	92542926	92542933	92554040	32
NBS 050-135	4	13.11-12.95	75	92542934	92542943	92554041	42
	4	12.01	60	92542935	92542944	92554042	42
	4	11.30	50	92542936	92542945	92554043	42
	4	10.59	40	92542937	92542946	92554044	42
	4	9.49	30	92542938	92542947	92554045	42
	4	8.86	25	92542939	92542948	92554046	42
	6	12.48	20	92542940	92542949	92554047	42
	6	11.30	15	92542936	92542945	92554048	42
	6	9.80	10	92542942	92542951	92554049	42
NBS 050-150	4	14.96	150	92542952	92542961	92554050	42
	4	14.09	125	92542953	92542962	92554051	42
	4	12.99	100	92542954	92542963	92554052	42
	4	11.73	75	92542955	92542964	92554053	42
	6	16.14	60	92542956	92542965	92554054	42
	6	15.59	50	92542957	92542966	92554055	42
	6	14.49	40	92542958	92542967	92554056	42
	6	13.15	30	92542959	92542968	92554057	42
	6	12.28	25	92542960	92542969	92554058	42

Pump size	Pole	Actual impeller trim [inch]	P2 [hp]	Pump material code			Impeller bore, d [mm]
				S2, S3, S4, S5, SA, SB, SC, SD	S6, S7, S8, S9, SE, SF, SG, SH	T2, TA	
				Impeller material			
				304 (1.4308)	316 (1.4408)	904 (1.4517)	
NBS 060-095	4	9.53	40	92542970	92542978	92554059	32
	4	8.90	30	92542971	92542979	92554060	32
	4	8.43	25	92542972	92542980	92554061	32
	4	7.95	20	92542973	92542981	92554062	32
	4	7.32	15	92542974	92542982	92554063	32
	6	9.53	15	92542970	92542978	92554059	32
	6	9.21	10	92542975	92542983	92554064	32
	6	8.50	7.5	92542976	92542984	92554065	32
	6	7.56	5	92542977	92542985	92554066	32
NBS 060-110	4	10.75	60	92542986	92542992	92554067	42
	4	10.20	50	92542987	92542993	92554068	42
	4	9.57	40	92542988	92542994	92554069	42
	4	8.78	30	92542989	92542995	92554070	42
	6	10.75	20	92542986	92542992	92554067	42
	6	10.20	15	92542987	92542993	92554068	42
	6	9.17	10	92542990	92542996	92554071	42
	6	8.39	7.5	92542991	92542997	92554072	42
NBS 060-135	4	12.91-12.76	125	92542998	92543009	92554073	42
	4	12.24	100	92542999	92543010	92554074	42
	4	11.22	75	92543000	92543011	92554075	42
	4	10.35	60	92543001	92543012	92554076	42
	4	9.96	50	92543002	92543013	92554077	42
	4	9.25	40	92543003	92543014	92554078	42
	6	12.48-12.32	30	92543004	92543015	92554079	42
	6	11.54	25	92543005	92543016	92554080	42
	6	10.75	20	92543006	92543017	92554081	42
	6	9.80	15	92543007	92543018	92554082	42
	6	8.70	10	92543008	92543019	92554083	42
NBS 060-150	4	15.83	250	92543020	92543028	92554084	48
	4	14.80	200	92543021	92543029	92554085	48
	4	12.83	150	92543022	92543030	92554086	48
	4	11.97	125	92543023	92543031	92554087	48
	6	16.93	100	92543024	92543032	92554088	48
	6	16.06	75	92557190	92557191	92557192	48
	6	14.88	60	92543025	92543033	92554089	48
	6	13.70	50	92543026	92543034	92554090	48
	6	12.44	40	92543027	92543035	92554091	48
NBS 080-135	4	12.60	150	92543036	92543046	92554092	42
	4	11.89	125	92543037	92543047	92554093	42
	4	11.26	100	92543038	92543048	92554094	42
	4	10.31	75	92543039	92543049	92554095	42
	4	9.84	60	92543040	92543050	92554096	42
	6	13.15	50	92543041	92543051	92554097	42
	6	12.28	40	92543042	92543052	92554098	42
	6	11.26	30	92543038	92543048	92554094	42
	6	10.79	25	92543043	92543053	92554099	42
	6	10.16	20	92543044	92543054	92554100	42
	6	9.29	15	92543045	92543055	92554101	42

Pump size	Pole	Actual impeller trim [inch]	P2 [hp]	Pump material code			Impeller bore, d [mm]
				S2, S3, S4, S5, SA, SB, SC, SD	S6, S7, S8, S9, SE, SF, SG, SH	T2, TA	
				Impeller material			
				304 (1.4308)	316 (1.4408)	904 (1.4517)	
NBS 080-150	4	15.59	250	*92543056*	*92543062*	*92554102*	48
	4	14.25	200	*92543057*	*92543063*	*92554103*	48
	4	12.99	150	*92543058*	*92543064*	*92554104*	48
	4	12.20	125	*92543059*	*92543065*	*92554105*	48
	6	15.59	75	*92543056*	*92543062*	*92554102*	48
	6	14.25	60	*92543057*	*92543063*	*92554103*	48
	6	13.46	50	*92543060*	*92543066*	*92554106*	48
	6	12.60	40	*92543061*	*92543067*	*92554107*	48
NBS 100-150	4	14.76	250	*92543068*	*92543075*	*92554108*	48
	4	13.66	200	*92543069*	*92543076*	*92554109*	48
	4	12.48	150	*92543070*	*92543077*	*92554110*	48
	6	16.34	100	*92543071*	*92543078*	*92554111*	48
	6	14.92	75	*92543072*	*92543079*	*92554112*	48
	6	13.82	60	*92543073*	*92543080*	*92554113*	48
	6	12.95	50	*92543074*	*92543081*	*92554114*	48

Spare/bulk - Shaft seal and spacer

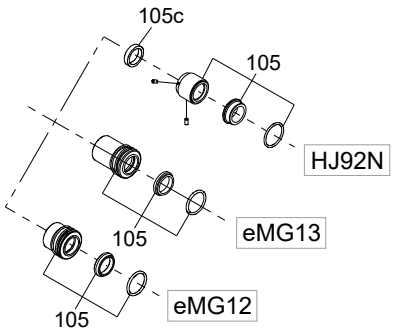

TM078775

Spare, shaft seal
105: 1 x shaft seal
Bulk, shaft seal
105: 5 x shaft seal
Spare, spacer
105c 1 x spacer

NBS/ NBSE pump size	Pole			Seal inner dia. [mm]	Pump rated pressure, see pos.10 in type key					
					Low pressure (Class 125) = code 6					
					Installed type	Shaft seal (pos. 105)				
						BQQE		BQQV	BAQE	
	2	4	6			Spare (1 pcs)	38	eMG13	Bulk (5 pcs)	Spare (1 pcs)	Bulk (5 pcs)
012-070	•			28	eMG13	99884645	99380916	98434905	92514269	96488302	99380919
		•		28	eMG13	99884645	99380916	98434905	92514269	96488302	99380919
015-070	•			28	eMG13	99884645	99380916	98434905	92514269	96488302	99380919
		•		28	eMG13	99884645	99380916	98434905	92514269	96488302	99380919
015-090	•			38	eMG13	98434906	92514302	98434908	92514301	96537605	99615415
		•		28	eMG13	99884645	99380916	98434905	92514269	96488302	99380919
015-095	•			38	eMG13	98434906	92514302	98434908	92514301	96537605	99615415
		•		28	eMG13	99884645	99380916	98434905	92514269	96488302	99380919
020-095	•			38	eMG12	97904623	92526480	92526462	92526481	92526463	92526482
		•		28	eMG13	99884645	99380916	98434905	92514269	96488302	99380919
020-110		•		28	eMG13	99884645	99380916	98434905	92514269	96488302	99380919
020-135		•		38	eMG13	98434906	92514302	98434908	92514301	96537605	99615415
025-070	•			28	eMG13	99884645	99380916	98434905	92514269	96488302	99380919
		•		28	eMG13	99884645	99380916	98434905	92514269	96488302	99380919
025-095	•			38	eMG12	97904623	92526480	92526462	92526481	92526463	92526482
		•	•	28	eMG13	99884645	99380916	98434905	92514269	96488302	99380919
025-110		•	•	38	eMG13	98434906	92514302	98434908	92514301	96537605	99615415
030-070	•			28	eMG13	99884645	99380916	98434905	92514269	96488302	99380919
		•		28	eMG13	99884645	99380916	98434905	92514269	96488302	99380919
030-095	•			38	eMG13	98434906	92514302	98434908	92514301	96537605	99615415
		•	•	28	eMG13	99884645	99380916	98434905	92514269	96488302	99380919
030-110		•	•	38	eMG13	98434906	92514302	98434908	92514301	96537605	99615415
030-135		•	•	38	eMG13	98434906	92514302	98434908	92514301	96537605	99615415
040-070	•			38	eMG13	98434906	92514302	98434908	92514301	96537605	99615415
		•	•	28	eMG13	99884645	99380916	98434905	92514269	96488302	99380919
040-095	•			38	eMG13	98434906	92514302	98434908	92514301	96537605	99615415
		•	•	28	eMG13	99884645	99380916	98434905	92514269	96488302	99380919
040-110		•	•	38	eMG13	98434906	92514302	98434908	92514301	96537605	99615415
040-135		•	•	38	eMG13	98434906	92514302	98434908	92514301	96537605	99615415
040-150		•	•	48	eMG13	98434909	92514334	98434941	92514333	96306472	99615417

NBS/ NBSE pump size	Pole			Seal inner dia. [mm]	Pump rated pressure, see pos.10 in type key					
					Low pressure (Class 125) = code 6					
					Installed type	Shaft seal (pos. 105)				
						BQQE		BQQV	BAQE	
	2	4	6			Spare (1 pcs)	38	eMG13	Bulk (5 pcs)	Spare (1 pcs)	Bulk (5 pcs)
050-070	•			38	eMG13	98434906	92514302	98434908	92514301	96537605	99615415
		•	•	28	eMG13	99884645	99380916	98434905	92514269	96488302	99380919
050-095		•	•	48	eMG13	98434909	92514334	98434941	92514333	96306472	99615417
050-110		•	•	38	eMG13	98434906	92514302	98434908	92514301	96537605	99615415
050-135		•	•	48	eMG13	98434909	92514334	98434941	92514333	96306472	99615417
050-150		•	•	48	eMG13	98434909	92514334	98434941	92514333	96306472	99615417
060-095		•	•	48	eMG13	98434909	92514334	98434941	92514333	96306472	99615417
060-110		•	•	48	eMG13	98434909	92514334	98434941	92514333	96306472	99615417
060-135		•	•	48	eMG13	98434909	92514334	98434941	92514333	96306472	99615417
060-150		•	•	55	eMG13	98434943	92514388	98434944	92514387	96306475	99707259
080-135		•	•	48	eMG13	98434909	92514334	98434941	92514333	96306472	99615417
080-150		•	•	55	eMG13	98434943	92514388	98434944	92514387	96306475	99707259
100-150		•	•	55	eMG13	98434943	92514388	98434944	92514387	96306475	99707259

Pump size	Pole			Seal inner dia. [mm]	Pump rated pressure, see pos.10 in type key							
					High pressure (Class 300) = code 7							
					Installed type	Shaft seal (pos. 105)					Spacer (pos. 105c)	
						DQQE		DAQF		DQQE-NSF	1.4401	1.4462
	2	4	6			Spare (1 pcs)	Bulk co (5 pcs)	Spare (1 pcs)	Bulk (5 pcs)	Spare (1 pcs)	Bulk (5 pcs)	Spare	Spare
NBS 012-070	•			28	HJ92N	97769895	92514258	96548355	92514233	92526474	92526491	96938597	96938598
		•		28	HJ92N	97769895	92514258	96548355	92514233	92526474	92526491	96938597	96938598
NBS 015-070	•			28	HJ92N	97769895	92514258	96548355	92514233	92526474	92526491	96938597	96938598
		•		28	HJ92N	97769895	92514258	96548355	92514233	92526474	92526491	96938597	96938598
NBS 015-090	•			38	HJ92N	97769897	92514291	96548359	92514274	92526475	92526492	96938599	96938600
		•		28	HJ92N	97769895	92514258	96548355	92514233	92526474	92526491	96938597	96938598
NBS 015-095	•			38	HJ92N	97769897	92514291	96548359	92514274	92526475	92526492	96938599	96938600
		•		28	HJ92N	97769895	92514258	96548355	92514233	92526474	92526491	96938597	96938598
NBS 020-095	•			38	HJ92N	97769897	92514291	96548359	92514274	92526476	92526493	1)	1)
		•		28	HJ92N	97769895	92514258	96548355	92514233	92526474	92526491	96938597	96938598
NBS 020-110		•		28	HJ92N	97769895	92514258	96548355	92514233	92526474	92526491	96938597	96938598
NBS 020-135		•		38	HJ92N	97769897	92514291	96548359	92514274	92526475	92526492	96938599	96938600
NBS 025-070	•			28	HJ92N	97769895	92514258	96548355	92514233	92526474	92526491	96938597	96938598
		•		28	HJ92N	97769895	92514258	96548355	92514233	92526474	92526491	96938597	96938598
NBS 025-095	•			38	HJ92N	97769897	92514291	96548359	92514274	92526476	92526493	1)	1)
		•	•	28	HJ92N	97769895	92514258	96548355	92514233	92526474	92526491	96938597	96938598
NBS 025-110		•	•	38	HJ92N	97769897	92514291	96548359	92514274	92526475	92526492	96938599	96938600
NBS 030-070	•			28	HJ92N	97769895	92514258	96548355	92514233	92526474	92526491	96938597	96938598
		•		28	HJ92N	97769895	92514258	96548355	92514233	92526474	92526491	96938597	96938598
NBS 030-095	•			38	HJ92N	97769897	92514291	96548359	92514274	92526475	92526492	96938599	96938600
		•	•	28	HJ92N	97769895	92514258	96548355	92514233	92526474	92526491	96938597	96938598
NBS 030-110		•	•	38	HJ92N	97769897	92514291	96548359	92514274	92526475	92526492	96938599	96938600
NBS 030-135		•	•	38	HJ92N	97769897	92514291	96548359	92514274	92526475	92526492	96938599	96938600
NBS 040-070	•			38	HJ92N	97769897	92514291	96548359	92514274	92526475	92526492	96938599	96938600
		•	•	28	HJ92N	97769895	92514258	96548355	92514233	92526474	92526491	96938597	96938598
NBS 040-095	•			38	HJ92N	97769897	92514291	96548359	92514274	92526475	92526492	96938599	96938600
		•	•	28	HJ92N	97769895	92514258	96548355	92514233	92526474	92526491	96938597	96938598
NBS 040-110		•	•	38	HJ92N	97769897	92514291	96548359	92514274	92526475	92526492	96938599	96938600
NBS 040-135		•	•	38	HJ92N	97769897	92514291	96548359	92514274	92526475	92526492	96938599	96938600

Pump size	Pole			Seal inner dia. [mm]	Installed type	Pump rated pressure, see pos.10 in type key							
						High pressure (Class 300) = code 7							
						Shaft seal (pos. 105)						Spacer (pos. 105c)	
						DQQE		DAQF		DQQE-NSF		1.4401	1.4462
	2	4	6			Spare (1 pcs)	Bulk co (5 pcs)	Spare (1 pcs)	Bulk (5 pcs)	Spare (1 pcs)	Bulk (5 pcs)	Spare	Spare
NBS 040-150		•	•	48	HJ92N	*97685509*	*92514323*	*96658796*	*92514307*	*92526477*	*92526494*	*96938602*	*96938603*
NBS 050-070	•			38	HJ92N	*97769897*	*92514291*	*96548359*	*92514274*	*92526475*	*92526492*	*96938599*	*96938600*
		•	•	28	HJ92N	*97769895*	*92514258*	*96548355*	*92514233*	*92526474*	*92526491*	*96938597*	*96938598*
NBS 050-095		•	•	48	HJ92N	*97685509*	*92514323*	*96658796*	*92514307*	*92526477*	*92526494*	*96938602*	*96938603*
NBS 050-110		•	•	38	HJ92N	*97769897*	*92514291*	*96548359*	*92514274*	*92526475*	*92526492*	*96938599*	*96938600*
NBS 050-135		•	•	48	HJ92N	*97685509*	*92514323*	*96658796*	*92514307*	*92526477*	*92526494*	*96938602*	*96938603*
NBS 050-150		•	•	48	HJ92N	*97685509*	*92514323*	*96658796*	*92514307*	*92526477*	*92526494*	*96938602*	*96938603*
NBS 060-095		•	•	48	HJ92N	*97685509*	*92514323*	*96658796*	*92514307*	*92526477*	*92526494*	*96938602*	*96938603*
NBS 060-110		•	•	48	HJ92N	*97685509*	*92514323*	*96658796*	*92514307*	*92526477*	*92526494*	*96938602*	*96938603*
NBS 060-135		•	•	48	HJ92N	*97685509*	*92514323*	*96658796*	*92514307*	*92526477*	*92526494*	*96938602*	*96938603*
NBS 060-150		•	•	55	HJ92N	*97685596*	*92514356*	*96658807*	*92514335*	*92526479*	*92526495*	*96938604*	*96938605*
NBS 080-135		•	•	48	HJ92N	*97685509*	*92514323*	*96658796*	*92514307*	*92526477*	*92526494*	*96938602*	*96938603*
NBS 080-150		•	•	55	HJ92N	*97685596*	*92514356*	*96658807*	*92514335*	*92526479*	*92526495*	*96938604*	*96938605*
NBS 100-150		•	•	55	HJ92N	*97685596*	*92514356*	*96658807*	*92514335*	*92526479*	*92526495*	*96938604*	*96938605*

1) The spacer is not required for this pump size.

Spare/bulk - O-ring for cover and seal cover

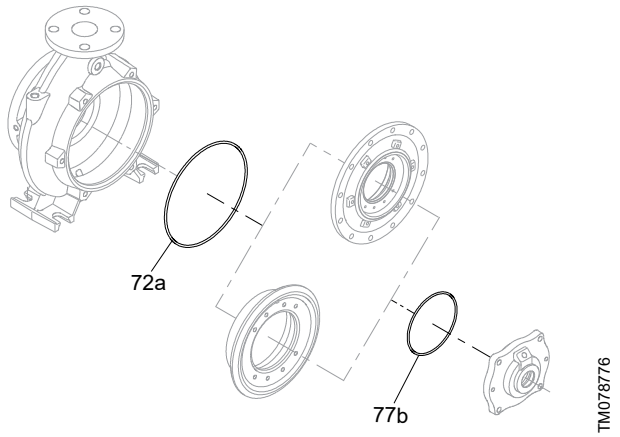

Spare, O-ring (connection between cover and pump housing)
72a: 1 x O-ring
Spare, O-ring (connection between seal cover and cover)
77b: 1 x O-ring

Pump size	Pole			O-ring (pos. 72a)					
				Spare (1 pcs)			Bulk (5 pcs)		
				Material			Material		
	2	4	6	EPDM	FKM (Viton)	EPDM-NSF	EPDM	FKM (Viton)	EPDM-NSF
NBS 012-070	•			97757659	92526498	92526500	92526508	92526514	92526520
		•		97757659	92526498	92526500	92526508	92526514	92526520
NBS 015-070	•			97757659	92526498	92526500	92526508	92526514	92526520
		•		97757659	92526498	92526500	92526508	92526514	92526520
NBS 015-090	•			97757672	97757699	92526501	92526509	92526515	92526521
		•		97757672	97757699	92526501	92526509	92526515	92526521
NBS 015-095	•			97757672	97757699	92526501	92526509	92526515	92526521
		•		97757672	97757699	92526501	92526509	92526515	92526521
NBS 020-095	•			97757672	97757699	92526501	92526509	92526515	92526521
		•		97757672	97757699	92526501	92526509	92526515	92526521
NBS 020-110		•		97757672	97757699	92526501	92526509	92526515	92526521
NBS 020-135		•		97757675	97757705	92526503	92526511	92526517	92526523
NBS 025-070	•			97757659	92526498	92526500	92526508	92526514	92526520
		•		97757659	92526498	92526500	92526508	92526514	92526520
NBS 025-095	•			92526496	92526497	92526499	92526507	92526513	92526519
		•	•	92526496	92526497	92526499	92526507	92526513	92526519
NBS 025-110		•	•	97757673	97757703	92526502	92526510	92526516	92526522
NBS 030-070	•			97757659	92526498	92526500	92526508	92526514	92526520
		•		97757659	92526498	92526500	92526508	92526514	92526520
NBS 030-095	•			92526496	92526497	92526499	92526507	92526513	92526519
		•	•	92526496	92526497	92526499	92526507	92526513	92526519
NBS 030-110		•	•	97757673	97757703	92526502	92526510	92526516	92526522
NBS 030-135		•	•	97757675	97757705	92526503	92526511	92526517	92526523
NBS 040-070	•			97757659	92526498	92526500	92526508	92526514	92526520
		•	•	97757659	92526498	92526500	92526508	92526514	92526520
NBS 040-095	•			92526496	92526497	92526499	92526507	92526513	92526519
		•	•	92526496	92526497	92526499	92526507	92526513	92526519
NBS 040-110		•	•	97757673	97757703	92526502	92526510	92526516	92526522
NBS 040-135		•	•	97757675	97757705	92526503	92526511	92526517	92526523
NBS 040-150		•	•	97757676	97757707	92526504	92526512	92526518	92526524

Pump size	Pole			O-ring (pos. 72a)					
				Spare (1 pcs)			Bulk (5 pcs)		
				Material			Material		
	2	4	6	EPDM	FKM (Viton)	EPDM-NSF	EPDM	FKM (Viton)	EPDM-NSF
NBS 050-070	•			97757659	92526498	92526500	92526508	92526514	92526520
		•	•	97757659	92526498	92526500	92526508	92526514	92526520
NBS 050-095		•	•	92526496	92526497	92526499	92526507	92526513	92526519
NBS 050-110		•	•	97757673	97757703	92526502	92526510	92526516	92526522
NBS 050-135		•	•	97757675	97757705	92526503	92526511	92526517	92526523
NBS 050-150		•	•	97757676	97757707	92526504	92526512	92526518	92526524
NBS 060-095		•	•	92526496	92526497	92526499	92526507	92526513	92526519
NBS 060-110		•	•	97757673	97757703	92526502	92526510	92526516	92526522
NBS 060-135		•	•	97757675	97757705	92526503	92526511	92526517	92526523
NBS 060-150		•	•	97757676	97757707	92526504	92526512	92526518	92526524
NBS 080-135		•	•	97757675	97757705	92526503	92526511	92526517	92526523
NBS 080-150		•	•	97757676	97757707	92526504	92526512	92526518	92526524
NBS 100-150		•	•	97757676	97757707	92526504	92526512	92526518	92526524

Pump size	Pole			O-ring (pos. 77b)					
				Spare (1 pcs)			Bulk (5 pcs)		
				Material			Material		
	2	4	6	EPDM	FKM (Viton)	EPDM-NSF	EPDM	FKM (Viton)	EPDM-NSF
NBS 012-070	•			97761203	97761204	92526505	92526525	92526527	92526529
		•		97761203	97761204	92526505	92526525	92526527	92526529
NBS 015-070	•			97761203	97761204	92526505	92526525	92526527	92526529
		•		97761203	97761204	92526505	92526525	92526527	92526529
NBS 015-090	•			97761203	97761204	92526505	92526525	92526527	92526529
		•		97761203	97761204	92526505	92526525	92526527	92526529
NBS 015-095	•			97761203	97761204	92526505	92526525	92526527	92526529
		•		97761203	97761204	92526505	92526525	92526527	92526529
NBS 020-095	•			97761203	97761204	92526505	92526525	92526527	92526529
		•		97761203	97761204	92526505	92526525	92526527	92526529
NBS 020-110		•		97761203	97761204	92526505	92526525	92526527	92526529
NBS 020-135		•		97761203	97761204	92526505	92526525	92526527	92526529
NBS 025-070	•			97761203	97761204	92526505	92526525	92526527	92526529
		•		97761203	97761204	92526505	92526525	92526527	92526529
NBS 025-095	•			97761203	97761204	92526505	92526525	92526527	92526529
		•	•	97761203	97761204	92526505	92526525	92526527	92526529
NBS 025-110		•	•	97761203	97761204	92526505	92526525	92526527	92526529
NBS 030-070	•			97761203	97761204	92526505	92526525	92526527	92526529
		•		97761203	97761204	92526505	92526525	92526527	92526529
NBS 030-095	•			97761203	97761204	92526505	92526525	92526527	92526529
		•	•	97761203	97761204	92526505	92526525	92526527	92526529
NBS 030-110		•	•	97761203	97761204	92526505	92526525	92526527	92526529
NBS 030-135		•	•	97761203	97761204	92526505	92526525	92526527	92526529
NBS 040-070	•			97761203	97761204	92526505	92526525	92526527	92526529
		•	•	97761203	97761204	92526505	92526525	92526527	92526529
NBS 040-095	•			97761203	97761204	92526505	92526525	92526527	92526529
		•	•	97761203	97761204	92526505	92526525	92526527	92526529
NBS 040-110		•	•	97761203	97761204	92526505	92526525	92526527	92526529
NBS 040-135		•	•	97761203	97761204	92526505	92526525	92526527	92526529
NBS 040-150		•	•	97757693	97757714	92526506	92526526	92526528	92526530
NBS 050-070	•			97761203	97761204	92526505	92526525	92526527	92526529
		•	•	97761203	97761204	92526505	92526525	92526527	92526529
NBS 050-095		•	•	97761203	97761204	92526505	92526525	92526527	92526529

Pump size	Pole			O-ring (pos. 77b)					
				Spare (1 pcs)			Bulk (5 pcs)		
				Material			Material		
	2	4	6	EPDM	FKM (Viton)	EPDM-NSF	EPDM	FKM (Viton)	EPDM-NSF
NBS 050-110		•	•	*97761203*	*97761204*	*92526505*	*92526525*	*92526527*	*92526529*
NBS 050-135		•	•	*97757693*	*97757714*	*92526506*	*92526526*	*92526528*	*92526530*
NBS 050-150		•	•	*97757693*	*97757714*	*92526506*	*92526526*	*92526528*	*92526530*
NBS 060-095		•	•	*97761203*	*97761204*	*92526505*	*92526525*	*92526527*	*92526529*
NBS 060-110		•	•	*97757693*	*97757714*	*92526506*	*92526526*	*92526528*	*92526530*
NBS 060-135		•	•	*97757693*	*97757714*	*92526506*	*92526526*	*92526528*	*92526530*
NBS 060-150		•	•	*97757693*	*97757714*	*92526506*	*92526526*	*92526528*	*92526530*
NBS 080-135		•	•	*97757693*	*97757714*	*92526506*	*92526526*	*92526528*	*92526530*
NBS 080-150		•	•	*97757693*	*97757714*	*92526506*	*92526526*	*92526528*	*92526530*
NBS 100-150		•	•	*97757693*	*97757714*	*92526506*	*92526526*	*92526528*	*92526530*

Kit/spare - Cover

Insert cover

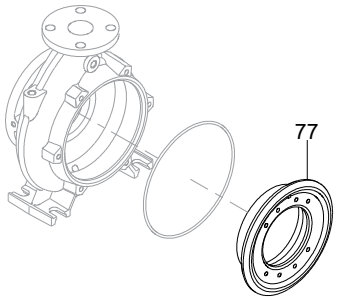

TM078539

Spare, insert cover
77: 1 x cover

When ordering the kit or spare for cover, please check the original surface color of wetted parts and approval mark on the pump nameplate, to identify the correct service kit or spare.

Bolt-in cover

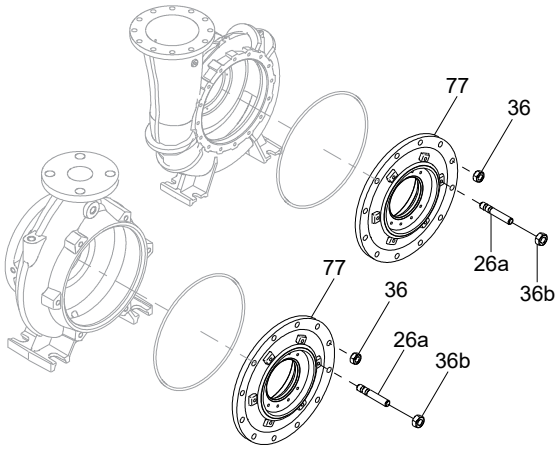

TM1040597

Kit, bolt-in cover
77: 1 x cover
26a: Needed number of stay bolts
36: Needed number of hex nuts
36b: Needed number of hex nuts

Check original surface color of wetted parts and approval mark				Black primer No approval mark		Sand blasted metal NSF compliant		Green coating NSF compliant	
Pump size	Pole			Spare	Kit	Spare	Kit	Spare	Kit
	2	4	6	Insert	Bolt-in type	Insert	Bolt-in	Insert	Bolt-in
NBS 012-070	•			92521768	-	92521768	-	92526445	-
		•		92521768	-	92521768	-	92526445	-
NBS 015-070	•			92521768	-	92521768	-	92526445	-
		•		92521768	-	92521768	-	92526445	-
NBS 015-090	•			-	92521585	-	92521585	-	92526460
		•		-	92521585	-	92521585	-	92526460
NBS 015-095	•			-	92521585	-	92521585	-	92526460
		•		-	92521585	-	92521585	-	92526460
NBS 020-095	•			-	92521584	-	92521584	-	92526458
		•		-	92521585	-	92521585	-	92526460
NBS 020-110		•		-	92521585	-	92521585	-	92526460
NBS 020-135		•		-	92521586	-	92521586	-	92526461
NBS 025-070	•			92521768	-	92521768	-	92526445	-
		•		92521768	-	92521768	-	92526445	-
NBS 025-095	•			-	92521579	-	92521579	-	92526452
		•	•	-	92521580	-	92521580	-	92526454
NBS 025-110		•	•	-	92521582	-	92521582	-	92526456
NBS 030-070	•			92521768	-	92521768	-	92526445	-
		•		92521768	-	92521768	-	92526445	-
NBS 030-095	•			-	92521579	-	92521579	-	92526452
		•	•	-	92521580	-	92521580	-	92526454
NBS 030-110		•	•	-	92521582	-	92521582	-	92526456
NBS 030-135		•	•	-	92521583	-	92521583	-	92526457
NBS 040-070	•			92521768	-	92521768	-	92526445	-
		•	•	92521768	-	92521768	-	92526445	-
NBS 040-095	•			-	92521579	-	92521579	-	92526452
		•	•	-	92521580	-	92521580	-	92526454
NBS 040-110		•	•	-	92521582	-	92521582	-	92526456
NBS 040-135		•	•	-	92521583	-	92521583	-	92526457
NBS 040-150		•	•	-	92521576	-	92521576	-	92526449

Check original surface color of wetted parts and approval mark				Black primer No approval mark		Sand blasted metal NSF compliant		Green coating NSF compliant	
Pump size	Pole			Spare	Kit	Spare	Kit	Spare	Kit
	2	4	6	Insert	Bolt-in type	Insert	Bolt-in	Insert	Bolt-in
NBS 050-070	•			*92521768*	-	*92521768*	-	*92526445*	-
		•	•	*92521768*	-	*92521768*	-	*92526445*	-
NBS 050-095		•	•	-	*92521581*	-	*92521581*	-	*92526455*
NBS 050-110		•	•	-	*92521582*	-	*92521582*	-	*92526456*
NBS 050-135		•	•	-	*92521574*	-	*92521574*	-	*92526446*
NBS 050-150		•	•	-	*92521576*	-	*92521576*	-	*92526449*
NBS 060-095		•	•	-	*92521581*	-	*92521581*	-	*92526455*
NBS 060-110		•	•	*92521769*	-	*92521769*	-	*92526444*	-
NBS 060-135		•	•	-	*92521575*	-	*92521575*	-	*92526448*
NBS 060-150		•	•	-	*92521577*	-	*92521577*	-	*92526450*
NBS 080-135		•	•	-	*92521575*	-	*92521575*	-	*92526448*
NBS 080-150		•	•	-	*92521578*	-	*92521578*	-	*92526451*
NBS 100-150		•	•	-	*92521578*	-	*92521578*	-	*92526451*

Kit - Seal cover

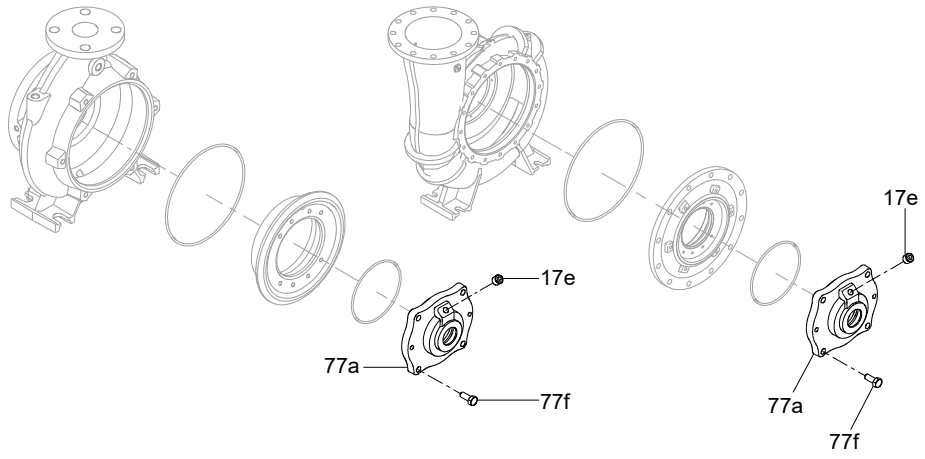

Kit, seal cover
77a: 1 x seal cover 20b: 1 x plug 77f: 4 x hex head screw

Check original surface color of wetted parts and approval mark				Black primer No approval mark	Sand blasted metal NSF compliant	Green coating NSF compliant
Pump size	Pole					
	2	4	6			
NBS 012-070	•			92521659	92521665	92521662
		•		92521659	92521665	92521662
NBS 015-070	•			92521668	92521674	92521671
		•		92521659	92521665	92521662
NBS 015-090	•			92521704	92521710	92521707
		•		92521668	92521674	92521671
NBS 015-095	•			92521704	92521710	92521707
		•		92521668	92521674	92521671
NBS 020-095	•			92521686	92521692	92521689
		•		92521668	92521674	92521671
NBS 020-110		•		92521668	92521674	92521671
NBS 020-135		•		92521695	92521701	92521698
NBS 025-070	•			92521668	92521674	92521671
		•		92521659	92521665	92521662
NBS 025-095	•			92521686	92521692	92521689
		•	•	92521668	92521674	92521671
NBS 025-110		•	•	92521695	92521701	92521698
NBS 030-070	•			92521668	92521674	92521671
		•		92521659	92521665	92521662
NBS 030-095	•			92521677	92521683	92521680
		•	•	92521668	92521674	92521671
NBS 030-110		•	•	92521695	92521701	92521698
NBS 030-135		•	•	92521695	92521701	92521698
NBS 040-070	•			92521704	92521710	92521707
		•	•	92521668	92521674	92521671
NBS 040-095	•			92521677	92521683	92521680
		•	•	92521668	92521674	92521671
NBS 040-110		•	•	92521695	92521701	92521698
NBS 040-135		•	•	92521695	92521701	92521698
NBS 040-150		•	•	92521713	92521719	92521716
NBS 050-070	•			92521704	92521710	92521707
		•	•	92521668	92521674	92521671

Check original surface color of wetted parts and approval mark				Black primer No approval mark	Sand blasted metal NSF compliant	Green coating NSF compliant
Pump size	Pole					
	2	4	6			
NBS 050-095		•	•	*92521722*	*92521728*	*92521725*
NBS 050-110		•	•	*92521695*	*92521701*	*92521698*
NBS 050-135		•	•	*92521713*	*92521719*	*92521716*
NBS 050-150		•	•	*92521713*	*92521719*	*92521716*
NBS 060-095		•	•	*92521722*	*92521728*	*92521725*
NBS 060-110		•	•	*92521713*	*92521719*	*92521716*
NBS 060-135		•	•	*92521713*	*92521719*	*92521716*
NBS 060-150		•	•	*92521731*	*92521737*	*92521734*
NBS 080-135		•	•	*92521713*	*92521719*	*92521716*
NBS 080-150		•	•	*92521731*	*92521737*	*92521734*
NBS 100-150		•	•	*92521731*	*92521737*	*92521734*

Kit - Flushing line

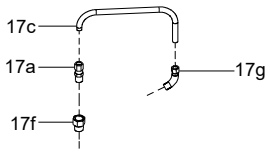

TM078549

Kit, flushing line
17c: 1 x tube
17a: 1 x connector, 1/4" tube x 1/4" NPT
17f: 1 x flow control adapter
17g: 1 x connector, elbow, 45, 1/4" tube x 1/8" NPT

Kit number	Size and tubing type	Tube length
92521740	Kit, small - nylon	24 Inch
92521741	Kit, large - nylon	36 Inch
92521742	Kit, small - copper	24 Inch
92521743	Kit, large - copper	36 Inch
92521744	Kit, small - stainless steel	24 Inch
92521745	Kit, large - stainless steel	36 Inch

Spare - Flow control adapter

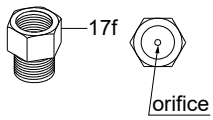

TM079087

Kit, flushing line
17f: 1 x flow control adapter

Spare number: 99857726

Kit - Shaft

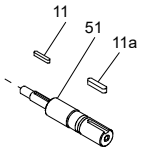

TM078543

Kit, shaft
51: 1 x pump shaft
11: 1 x key (impeller)
11a: 1 x key (coupling)

Pump size	Pole			Material code in type key			
				S2, S6, SA, SE	S3, S7, SB, SF	S4, S8, SC, SG	S5, S9, SD, SH
				Shaft material			
	2	4	6	1.4021/1.4034	1.4301	1.4401	1.4462
NBS 012-070	•			92521607	92521605	92521606	92521608
		•		92521607	92521605	92521606	92521608
NBS 015-070	•			92521612	92521609	92521610	92521611
		•		92521607	92521605	92521606	92521608
NBS 015-090	•			92521615	92521613	92521614	92521616
		•		92521612	92521609	92521610	92521611
NBS 015-095	•			92521615	92521613	92521614	92521616
		•		92521612	92521609	92521610	92521611
NBS 020-095	•			92521619	92521617	92521618	92521620
		•		92521612	92521609	92521610	92521611
NBS 020-110		•		92521612	92521609	92521610	92521611
NBS 020-135		•		92521623	92521621	92521622	92521624
NBS 025-070	•			92521612	92521609	92521610	92521611
		•		92521607	92521605	92521606	92521608
NBS 025-095	•			92521619	92521617	92521618	92521620
		•	•	92521612	92521609	92521610	92521611
NBS 025-110		•	•	92521623	92521621	92521622	92521624
NBS 030-070	•			92521612	92521609	92521610	92521611
		•		92521607	92521605	92521606	92521608
NBS 030-095	•			92521623	92521621	92521622	92521624
		•	•	92521612	92521609	92521610	92521611
NBS 030-110		•	•	92521623	92521621	92521622	92521624
NBS 030-135		•	•	92521623	92521621	92521622	92521624
NBS 040-070	•			92521615	92521613	92521614	92521616
		•	•	92521612	92521609	92521610	92521611
NBS 040-095	•			92521623	92521621	92521622	92521624
		•	•	92521612	92521609	92521610	92521611
NBS 040-110		•	•	92521623	92521621	92521622	92521624
NBS 040-135		•	•	92521623	92521621	92521622	92521624
NBS 040-150		•	•	92521631	92521629	92521630	92521632
NBS 050-070	•			92521615	92521613	92521614	92521616
		•	•	92521612	92521609	92521610	92521611
NBS 050-095		•	•	92521627	92521625	92521626	92521628
NBS 050-110		•	•	92521623	92521621	92521622	92521624
NBS 050-135		•	•	92521631	92521629	92521630	92521632
NBS 050-150		•	•	92521631	92521629	92521630	92521632
NBS 060-095		•	•	92521627	92521625	92521626	92521628
NBS 060-110		•	•	92521631	92521629	92521630	92521632
NBS 060-135		•	•	92521631	92521629	92521630	92521632

Pump size	Pole			Material code in type key			
				S2, S6, SA, SE	S3, S7, SB, SF	S4, S8, SC, SG	S5, S9, SD, SH
				Shaft material			
	2	4	6	1.4021/1.4034	1.4301	1.4401	1.4462
NBS 060-150		•	•	*92521635*	*92521633*	*92521634*	*92521636*
NBS 080-135		•	•	*92521631*	*92521629*	*92521630*	*92521632*
NBS 080-150		•	•	*92521635*	*92521633*	*92521634*	*92521636*
NBS 100-150		•	•	*92521635*	*92521633*	*92521634*	*92521636*

Spare - Key, coupling (pump side)

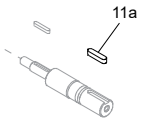

TM078810

Spare, key
11a: 1 x key

Pump size	Pole			Spare number
	2	4	6	
NBS 012-070	•			92521498
		•		92521498
NBS 015-070	•			92521498
		•		92521498
NBS 015-090	•			92521499
		•		92521498
NBS 015-095	•			92521499
		•		92521498
NBS 020-095	•			92521499
		•		92521498
NBS 020-110		•		92521498
NBS 020-135		•		92521499
NBS 025-070	•			92521498
		•		92521498
NBS 025-095	•			92521499
		•	•	92521498
NBS 025-110		•	•	92521499
NBS 030-070	•			92521498
		•		92521498
NBS 030-095	•			92521499
		•	•	92521498
NBS 030-110		•	•	92521499
NBS 030-135		•	•	92521499
NBS 040-070	•			92521499
		•	•	92521498
NBS 040-095	•			92521499
		•	•	92521498
NBS 040-110		•	•	92521499
NBS 040-135		•	•	92521499
NBS 040-150		•	•	92521500
NBS 050-070	•			92521499
		•	•	92521498
NBS 050-095		•	•	92521500
NBS 050-110		•	•	92521499
NBS 050-135		•	•	92521500
NBS 050-150		•	•	92521500
NBS 060-095		•	•	92521500
NBS 060-110		•	•	92521500
NBS 060-135		•	•	92521500
NBS 060-150		•	•	92521500
NBS 080-135		•	•	92521500
NBS 080-150		•	•	92521500
NBS 100-150		•	•	92521500

Kit - Split coupling

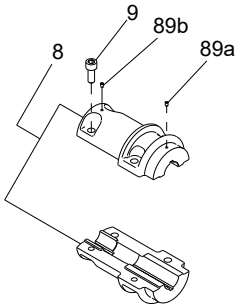

TM078544

Kit, split coupling
8: 2 x coupling half
9: 4 or 6 x coupling screw
89a: 1 x set screw
89b: 1 x set screw

Code for split coupling	Kit number
1	92521637
2	92521638
3	92521639
4 or 5	92521640
6	92521641
7	92521642
8	92521643
9	92521644
10	92521645
11 or 12	92521646
13	92521647
14	92521648
15	92521649
16	92521650
17	92521651
18	92521652
19	92521653
20	92521654
21	92521655
22	92521656
23	92521657
24	92521658

| Pole | Baldor Motor frame size | | |

Pump size	Pole			Motor frame size																										
	2	4	6	143TC	145TC	182TC	184TC	213TC	215TC	254TC	256TC	284TC	284TSC	286TC	286TSC	324TC	324TSC	326TC	326TSC	364TC	364TSC	365TC	365TSC	404TC	404TSC	405TC	405TSC	444TC	444TSC	445TC	445TSC	447TC
NBS 060-150		•	•																	21		21		22		22		24		24		24
NBS 080-135		•	•									18		18		19		19		20		20		22		22		23		23		
NBS 080-150		•	•																	21		21		22		22		24		24		24
NBS 100-150		•	•																			21		22		22		24		24		24

Kit - Motor stool

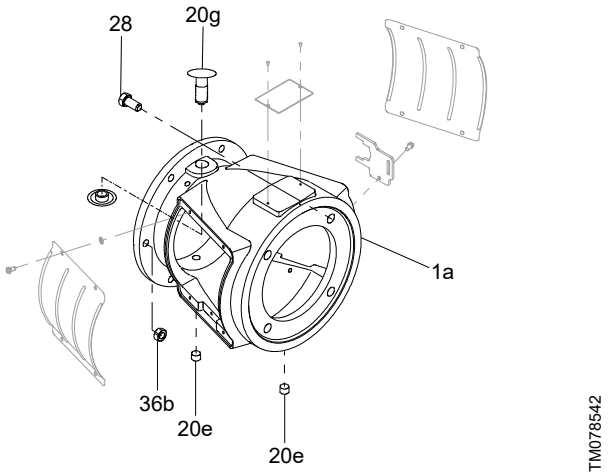

Kit, motor stool
1a: 1 x motor stool
36b: Needed number of nuts for mounting the pump and cover
28: Needed number of bolts for mounting the motor
20 (e, g): Needed number of plugs

Kit - Coupling guards

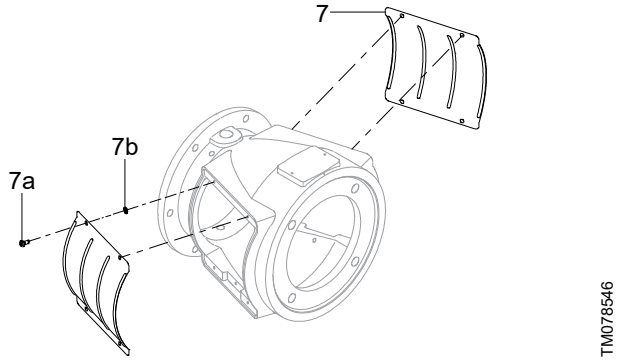

Kit, coupling guard
7: 2 x coupling guard
7a: 8 x hex socket head cap screw
7b: 8 x lock washer M5

Code for motor stool + coupling	Kit number for motor stool	Kit number for coupling guard
A	*92521587*	*92521760*
B	*92521588*	*92521762*
C	*92521589*	*92521761*
D	*92521590*	*92521767*
E	*92521591*	*92521763*
F	*92521592*	*92521765*
G	*92521593*	*92521746*
H	*92521594*	*92521763*
J	*92521595*	*92521764*
K	*92521596*	*92521763*
L	*92521597*	*92521748*
M	*92521598*	*92521747*
N	*92521599*	*92521748*
O	*92521600*	*92521766*
P	*92521601*	*92521765*
Q	*92521602*	*92521749*
R	*92521603*	*92521766*
S	*92521604*	*92521749*

Pole	Baldor Motor frame size																														
	143TC	145TC	182TC	184TC	213TC	215TC	254TC	256TC	284TC	284TSC	286TC	286TSC	324TC	324TSC	326TC	326TSC	364TC	364TSC	365TC	365TSC	404TC	404TSC	405TC	405TSC	444TC	444TSC	445TC	445TSC	447TC
	Motor power size [hp]																														
2	1.5	2 3	3 5	5 7.5	7.5 10	7.5 10 15	15 20	20 25		25 30		30 40		40 50		50 60		60 75		75 100		125		100 150		125 200		150	
4	1	1.5 2	3 5	5 7.5	10	15	20	25		30		40		50		60		75		100		100 125			125 150		150 200		200
6	1		1.5	2	3	5	7.5	10	15		20		25		30		40		50		60	75		100			125	150		150

Pump size	Pole		Baldor Motor frame size																												
	2	4 6	143TC	145TC	182TC	184TC	213TC	215TC	254TC	256TC	284TC	284TSC	286TC	286TSC	324TC	324TSC	326TC	326TSC	364TC	364TSC	365TC	365TSC	404TC	404TSC	405TC	405TSC	444TC	444TSC	445TC	445TSC	447TC
NBS 012-070	•			A	C	C	C	C	C																						
		•	A	A																											
NBS 015-070	•				C	C	C	C	C	C																					
		•	A	A	C																										

Pump size	Pole			Baldor Motor frame size																													
	2	4	6	143TC	145TC	182TC	184TC	213TC	215TC	254TC	256TC	284TC	284TSC	286TC	286TSC	324TC	324TSC	326TC	326TSC	364TC	364TSC	365TC	365TSC	404TC	404TSC	405TC	405TSC	444TC	444TSC	445TC	445TSC	447TC
NBS 015-090	•								C	B	B		E		E		G															
		•			A	C	C																									
NBS 015-095	•								C	B	B		E		E		G		G													
		•			A	C	C	C																								
NBS 020-095	•								C	B	B		E		E		G		G		G											
		•			A	C	C	C																								
NBS 020-110		•				C	C	C	C	C																						
NBS 020-135		•						J	J	J	J	K																				
NBS 025-070	•						C	C	C	C	C		E		E																	
		•		A	A	C	C																									
NBS 025-095	•										B		E		E		G		G		G		G									
		•	•	A		C	C	C	C																							
NBS 025-110		•	•				J	J	J	J																						
NBS 030-070	•								C	C	C		E		E		G															
		•			A	C	C																									
NBS 030-095	•														E		G		G		G		G		G		G		H			
		•	•			C	C	C	C	C																						
NBS 030-110		•	•					J	J	J	J																					
NBS 030-135		•	•						J	J	J	K		K		L																
NBS 040-070	•									B	B		E		E		G		G													
		•	•	A	A	C	C	C																								
NBS 040-095	•																		G		G		G		G		G		H			
		•	•				C	C	C	C	C																					
NBS 040-110		•	•					J	J	J	J	K		K																		
NBS 040-135		•	•						J	J	J	K		K		L		L														
NBS 040-150		•	•									N		N		P		P		P		P		O		O		Q		Q		
NBS 050-070	•									B	B		E		E		G		G		G		G									
		•	•	A		C	C	C	C																							
NBS 050-095		•	•					B	B	B	B	D		D																		
NBS 050-110		•	•						J	J	J	K		K		L																
NBS 050-135		•	•								M	N		N		P		P		P		P										
NBS 050-150		•	•													P		P		P		P		O		O		Q		Q		
NBS 060-095		•	•						B	B	B	D		D		F																
NBS 060-110		•	•							M	M	N		N		P		P		P												
NBS 060-135		•	•								M	N		N		P		P		P		P		O		O		Q				
NBS 060-150		•	•																	R		R		R		R		S		S		S
NBS 080-135		•	•									N		N		P		P		P		P		O		O		Q		Q		
NBS 080-150		•	•																	R		R		R		R		S		S		S
NBS 100-150		•	•																			R		R		R		S		S		S

Pump nameplate

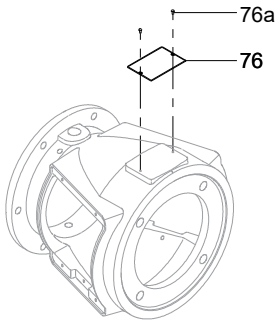

Nameplate
76: 1 x nameplate (72 x 50 mm), see section Nameplate for nameplate example
76a: 2 x rivet

When you require to replace a nameplate, take a picture of the existing one and send this to Grundfos.

Based on this, it is normally possible to print a new copy.

If the pump holds certain approvals, it may be a mandatory requirement to ship the complete unit back to Grundfos to check the pump, and to print and install a new nameplate in Grundfos facilities. This is to maintain the approval. Therefore, information of the installed pump is needed.

Related information

Nameplate

Kit - Plugs for seal cover and motor stool

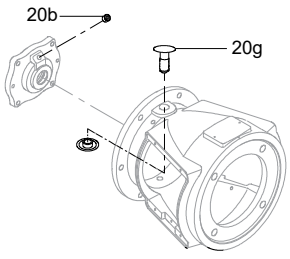

Kit, plugs for seal cover and motor stool
20b: 1 x plug
20g: 1 x 2-part push-fit composite plug

Kit number: 99857724

Kit - Fork tool (positioning tool for pump shaft)

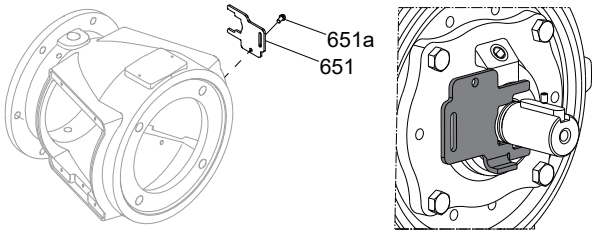

Kit, fork tool
651: 1 x fork tool
651a: 1 x position screw

Pump size	Pole			Kit number
	2	4	6	
NBS 012-070	•			92521501
		•		92521501
NBS 015-070 / NBS 015-090 / NBS 015-095	•			92521501
		•		92521501
NBS 020-095	•			92521501
		•		92521501
NBS 020-110		•		92521501
NBS 020-135		•		92521501
NBS 025-070	•			92521501
		•		92521501
NBS 025-095	•			92521501
		•	•	92521501
NBS 025-110		•	•	92521501
NBS 030-070	•			92521501
		•		92521501
NBS 030-095	•			92521501
		•	•	92521501
NBS 030-110		•	•	92521501
NBS 030-135		•	•	92521501
NBS 040-070 / NBS 040-095	•			92521501
		•	•	92521501
NBS 040-110		•	•	92521501
NBS 040-135		•	•	92521501
NBS 040-150		•	•	92521502
NBS 050-070	•			92521501
		•	•	92521501
NBS 050-095		•	•	92521502
NBS 050-110		•	•	92521501
NBS 050-135		•	•	92521502
NBS 050-150		•	•	92521502
NBS 060-095		•	•	92521502
NBS 060-110		•	•	92521502
NBS 060-135		•	•	92521502
NBS 060-150		•	•	92521502
NBS 080-135		•	•	92521502
NBS 080-150		•	•	92521502
NBS 100-150		•	•	92521502

Kit - Loose flange

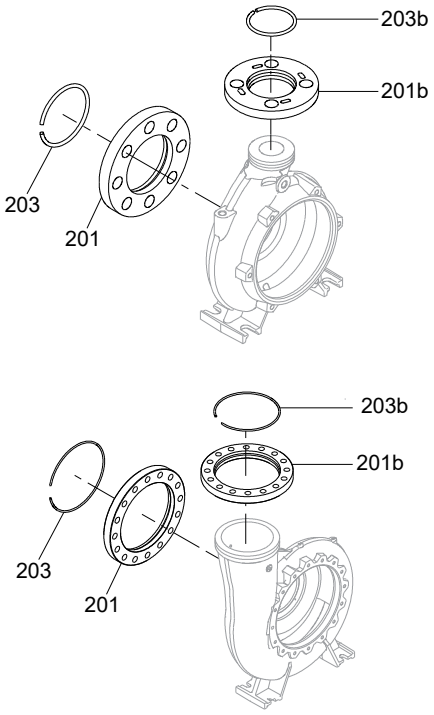

TM078770

Kit, flange for inlet
201: 1 x flange
203: 1 x lock ring
Kit, flange for outlet
201b: 1 x flange
203b: 1 x lock ring

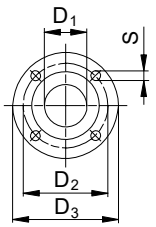

TM027720

Kit number	D1 [inch]	D2 [inch]	D3 [inch]	S
98329969	1.5	4.5	6 1/8	4 x ∅7/8
98329970	2	5	6 1/2	8 x ∅3/4
92526537	2.5	5 7/8	7 1/2	8 x ∅7/8
98254163	3	6 5/8	8 1/4	8 x ∅7/8
98254164	4	7 7/8	10	8 x ∅7/8
98254165	5	9 1/4	11	8 x ∅7/8
98254166	6	10 5/8	12 1/2	12 x ∅7/8
98254167	8	13	15	12 x ∅1
92526538	10	15 1/4	17 1/2	16 x ∅1 1/8
92526539	12	17 3/4	20 1/2	16 x ∅1 1/4

Kit - Support rails under pump

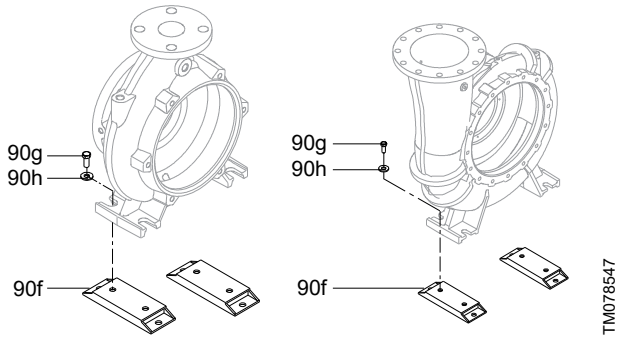

Kit, support rails under pump
90f: 2 x support rail
90g: 4 x hex screw
90h: 4 x washer

Code for support rails under pump	Kit number
0	No support rail required
1	*92521546*
2	*92521547*
3	*92521548*
4	*92521549*
5	*92521550*
6	*92521551*
7	*92521552*
8	*92521553*
9	*92521554*
A	*92521555*
B	*92521556*
C	*92521557*
D	*92521558*

Pole	Baldor Motor frame size																																							
	143TC	145TC		182TC		184TC		213TC		215TC			254TC		256TC		284TC	284TSC		286TC	286TSC		324TC	324TSC		326TC	326TSC		364TC	364TSC		365TSC		404TC	404TSC	405TC	405TSC		444TC	444TSC		445TC	445TSC	447TC
	Motor power size [hp]																																											
2	1.5	2	3	3	5	5	7.5	7.5	10	7.5	10	15	15	20	20	25		25	30	30	40		40	50		50	60		60	75		75	100		125		100	150			125	200			150	
4	1	1.5	2	3	5	5		7.5		10			15		20		25			30			40			50			60			75			100		100	125			125	150		150	200		200
6	1			1.5		2		3		5			7.5		10		15			20			25			30			40			50			60		75				100			125	150		150

Pump size	Pole			Motor frame size																																				
	2	4	6	143TC	145TC	182TC	184TC	213TC	215TC	254TC	256TC	284TC	284TSC	286TC	286TSC	324TC	324TSC	326TC	326TSC	364TC	364TSC	365TC	365TSC	404TC	404TSC	405TC	405TSC	444TC	444TSC	445TC	445TSC	447TC
NBS 012-070	•			8	8	9	9	9	9	9																														
		•		8	8																																			
NBS 015-070	•					9	9	9	9	9	9																													
		•		8	8	9																																		
NBS 015-090	•								0	5	5		5		5		6																							
		•			0	0	0																																	
NBS 015-095	•								0	5	5		5		5		6		6																					
		•			0	0	0	0																																
NBS 020-095	•								0	5	5		5		5		6		6		C																			
		•			0	0	0	0																																

Pump size	Pole			Motor frame size																													
	2	4	6	143TC	145TC	182TC	184TC	213TC	215TC	254TC	256TC	284TC	284TSC	286TC	286TSC	324TC	324TSC	326TC	326TSC	364TC	364TSC	365TC	365TSC	404TC	404TSC	405TC	405TSC	444TC	444TSC	445TC	445TSC	447TC
NBS 020-110		•				0	0	0	0	0																						
NBS 020-135		•						0	0	0	0	0																				
NBS 025-070	•						1	1	1	1	1		7		7																	
		•		0	0	1	1																									
NBS 025-095	•										0		0		0		2		2		3		3								
		•	•	0		0	0	0	0																							
NBS 025-110		•	•				0	0	0	0																						
NBS 030-070	•								1	1	1		7		7		D															
		•			0	1	1																									
NBS 030-095	•														0		2		2		3		3		4		4		B			
		•	•			0	0	0	0	0																						
NBS 030-110		•	•					0	0	0	0																					
NBS 030-135		•	•						0	0	0	0		0		0																
NBS 040-070	•									5	5		5		5		6		6													
		•	•	0	0	0	0	0																								
NBS 040-095	•																		0		2		2		3		3		4			
		•	•				0	0	0	0	0																					
NBS 040-110		•	•					0	0	0	0	0		0																		
NBS 040-135		•	•						0	0	0	0		0		0		0														
NBS 040-150		•	•									0		0		0		0		0		0		0		0		A		A		
NBS 050-070	•									0	0		0		0		2		2		3		3									
		•	•	0		0	0	0	0																							
NBS 050-095		•	•					0	0	0	0	0		0																		
NBS 050-110		•	•						0	0	0	0		0		0																
NBS 050-135		•	•								0	0		0		0		0		0		0										
NBS 050-150		•	•													0		0		0		0		0		0		0		0		
NBS 060-095		•	•						0	0	0	0		0		0																
NBS 060-110		•	•							0	0	0		0		0		0		0												
NBS 060-135		•	•								0	0		0		0		0		0		0		0		0		A				
NBS 060-150		•	•																	0		0		0		0		0		0		0
NBS 080-135		•	•									0		0		0		0		0		0		0		0		0		0		
NBS 080-150		•	•																	0		0		0		0		0		0		0
NBS 100-150		•	•																			0		0		0		0		0		0

Kit - Support rails under motor

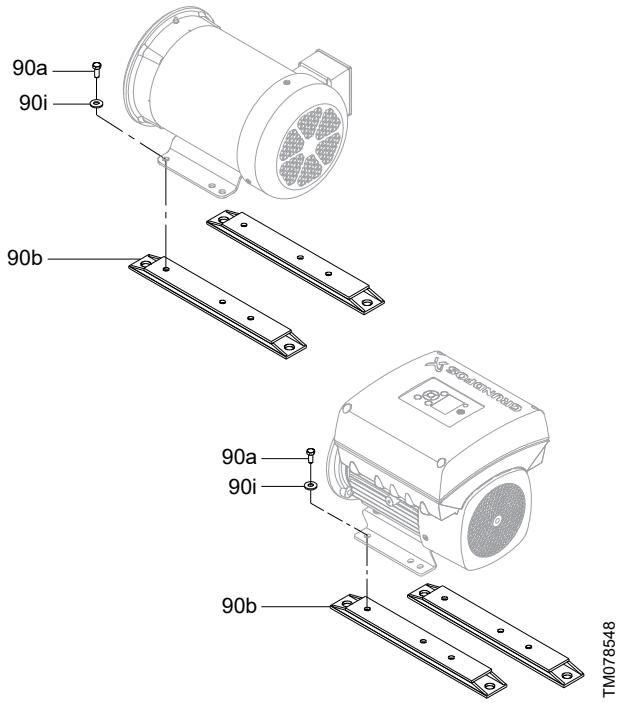

Kit, support rails under motor
90b: 2 x support rail
90a: 4 x hex screw
90i: 4 x washer

Code for support rails under motor	Kit number	Code for support rails under motor	Kit number
A	*92521503*	O	*92521521*
A1	*92521540*	P	*92521543*
B	*92521541*	Q	*92521544*
B1	*92521542*	R	*92521522*
C	*92521545*	S	*92521523*
C1	*92521504*	T	*92521524*
D	*92521505*	U	*92521525*
D1	*92521506*	V	*92521526*
E	*92521507*	X	*92521527*
E1	*92521508*	Y	*92521528*
F	*92521509*	Z	*92521529*
F1	*92521510*	Z1	*92521530*
G	*92521511*	1	*92521531*
G1	*92521512*	2	*92521532*
H	*92521513*	3	*92521533*
H1	*92521514*	4	*92521534*
I	*92521515*	5	*92521535*
J	*92521516*	6	*92521536*
K	*92521517*	7	*92521537*
L	*92521518*	8	*92521538*
M	*92521519*	9	*92521539*
N	*92521520*		

| Pole | Baldor Motor frame size | | |

Pump size	Pole			Motor frame size																										
	2	4	6	143TC	145TC	182TC	184TC	213TC	215TC	254TC	256TC	284TC	284TSC	286TC	286TSC	324TC	324TSC	326TC	326TSC	364TC	364TSC	365TC	365TSC	404TC	404TSC	405TC	405TSC	444TC	444TSC	445TC	445TSC	447TC
NBS 060-150		•	•																	B		B		B1		B1		5		5		5
NBS 080-135		•	•									1		1		Z		Z		Y		Y		8		8		6		6		
NBS 080-150		•	•																	2		2		Z1		Z1		7		7		7
NBS 100-150		•	•																			4		3		3		9		9		9

Kit - Sensor for NBSE Series 2000

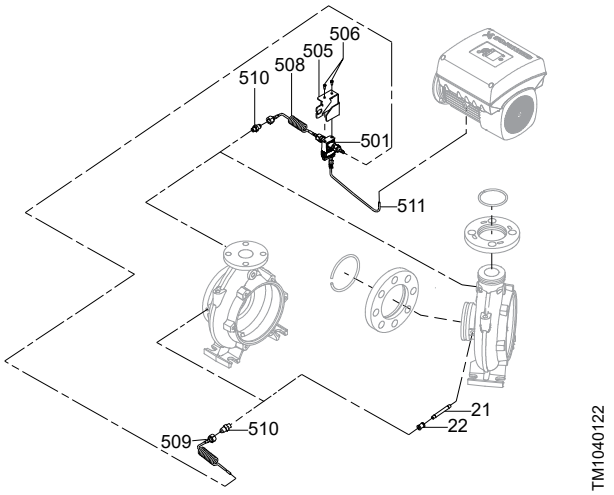

Kit, differential-pressure sensor
501: 1 x sensor
506: 2 x screw
511: 1 x cable (including connector to sensor)
Spare, sensor bracket
505: 1 x sensor bracket
Kit, capillary tube
508: 1 x capillary tube
509: 1 x capillary tube
510 2 x adapter plug
Spare, cable
511: 1 x cable (including connector to sensor)
Kit, pipe capillary tube connection
21: Connector pipe
22: Nipple piece

Kit, differential-pressure sensor

0-4 bar	0-6 bar	0-10 bar
99562724	*99562725*	*99562726*

Spare, bracket for sensor

99562727

Kit, capillary tube

92526544

Spare, cable

99562728

Kit, pipe capillary tube connection

92720672

59. Exploded drawings

Center-line outlet

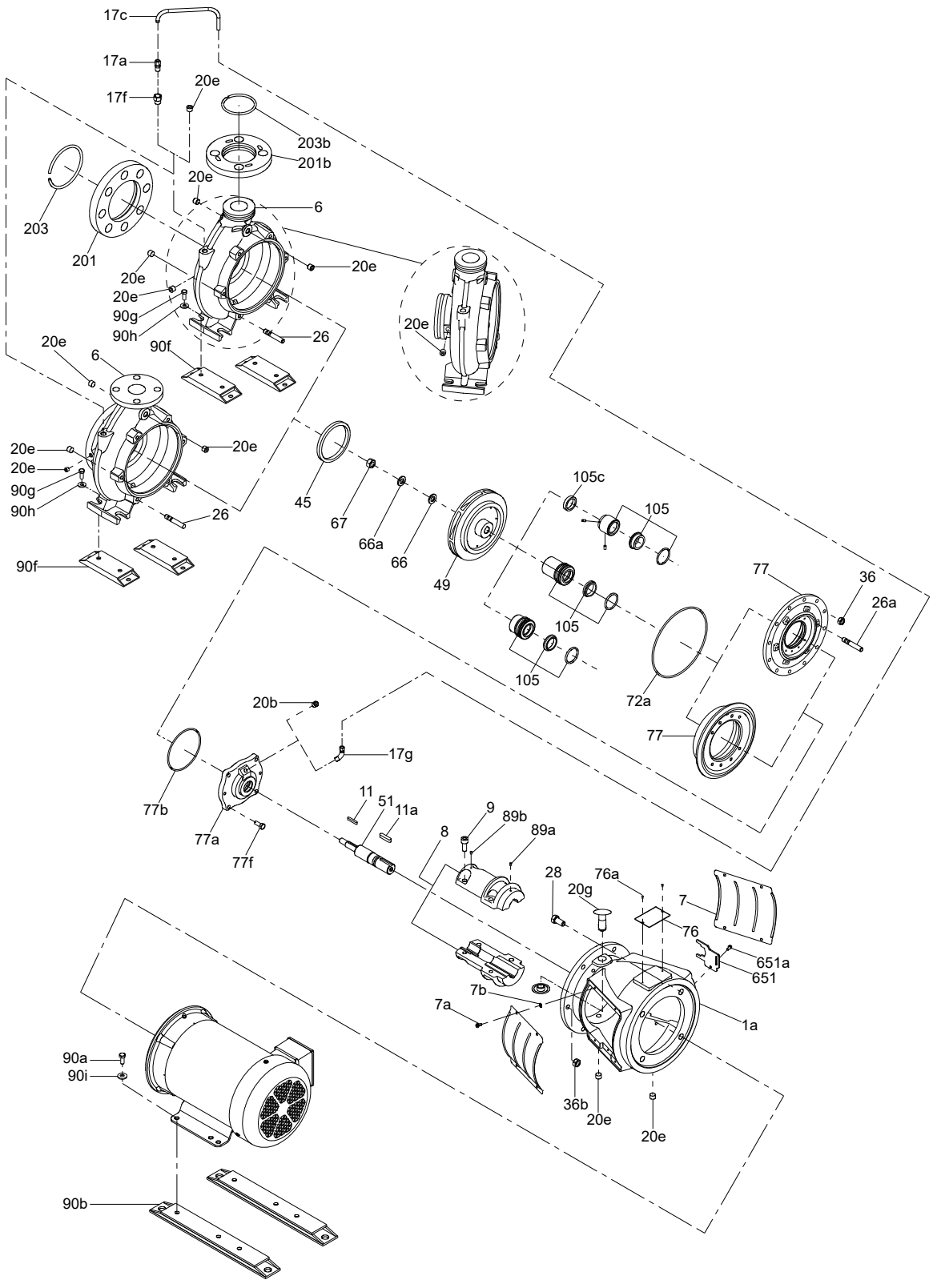

Tangential outlet

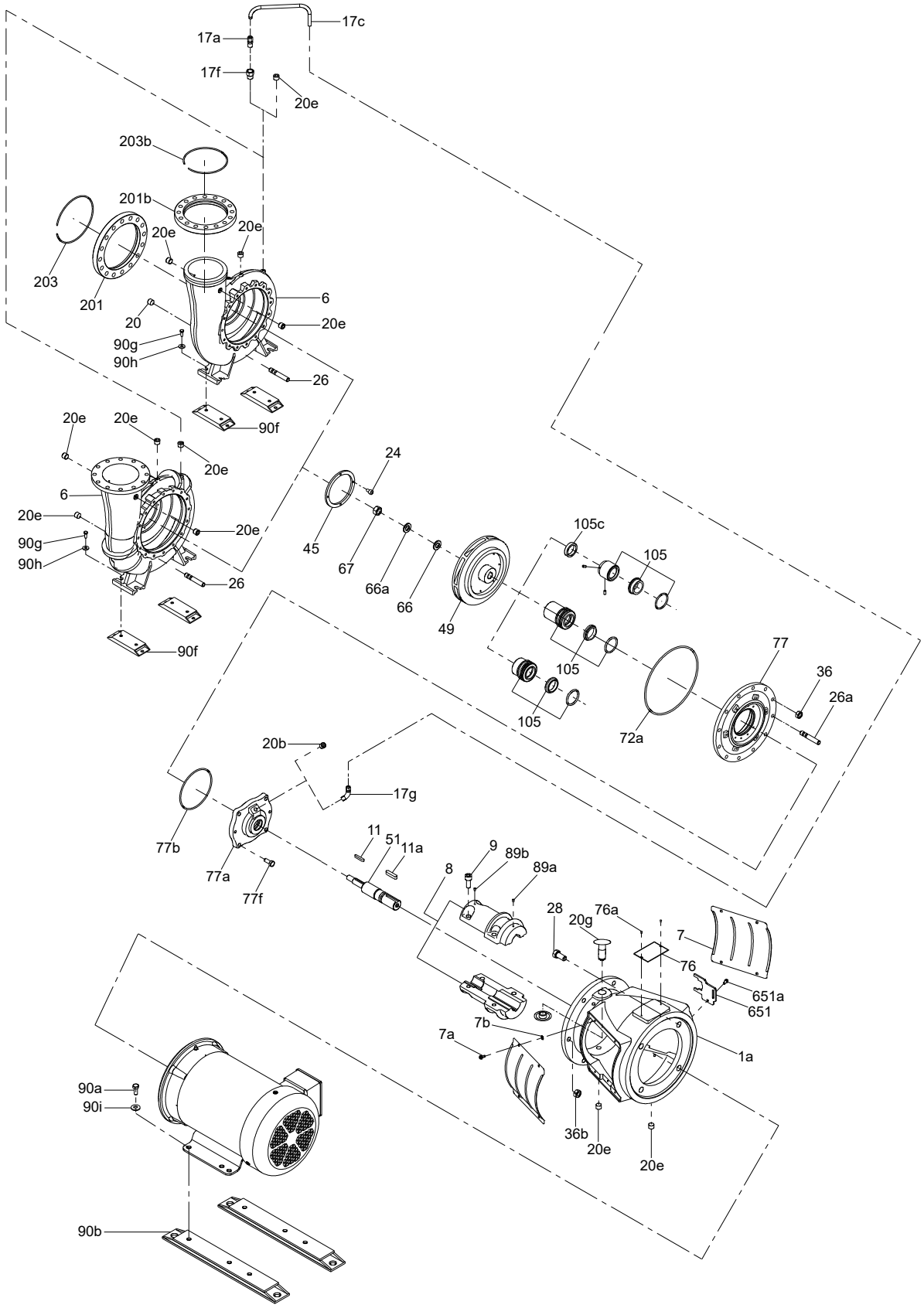

NBSE

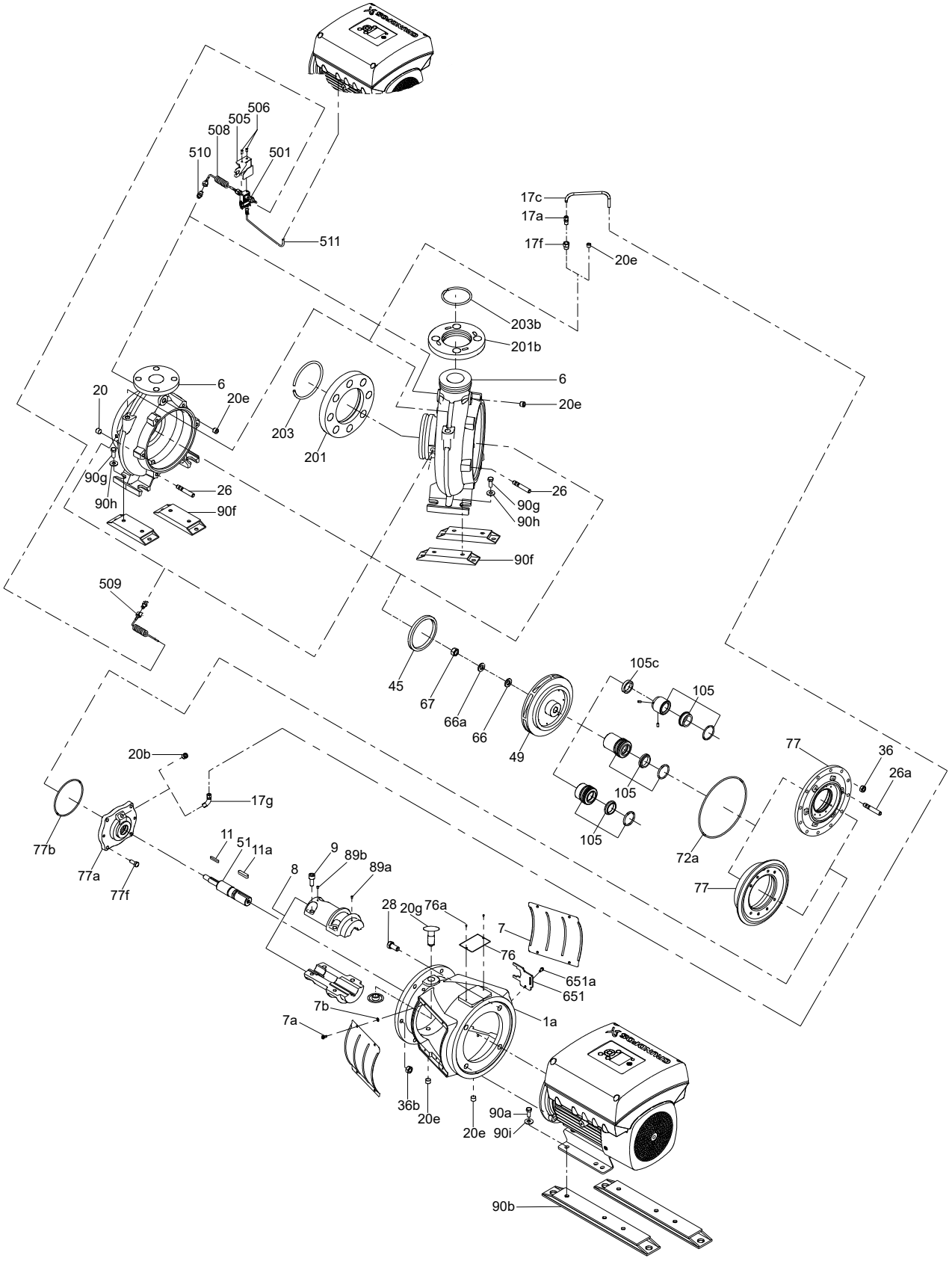

TM077568

60. NK

Model A

50/60 Hz

(for product numbers Kx xx xx xx)

Mechanical shaft seals, pos. 4200 and 4201

Nominal diameter [mm]			Variant code/kit No type/material						
Shaft		Sleeve							
d5	d3	d7	AQAV	AQQV	AQQE	DQQE	DQQV	GQQE	GQQV
24	28		*96433665*	*96433669*	*96433673*	*96433681*	*96433685*	*96433689*	*96433693*
32	38		*96433666*	*96433670*	*96433674*	*96433682*	*96433686*	*96591636*	*96433694*
42	48		*96433667*	*96433671*	*96433675*	*96433683*	*96433687*	*96433691*	*96433695*
55*		65	*96433668*	*96433672*	*96433676*	*96433684*	*96433688*	*96433692*	*96433696*
Burgmann specification									
• Type			**M7N/DW-00**	**M7N/DW-00**	**M7N/DW-00**	**HJ92N/DW**	**HJ92N/DW**	**MG1/DW-G6**	**MG1/DW-G6**
Material			**QAVGG**	**QQVGG**	**QQEGG**	**QQEGG**	**QQVGG**	**QQEGG**	**QQVGG**

Nominal diameter [mm]			Variant code/kit No type/material					
Shaft		Sleeve						
d5	d3	d7	BAQE	DAQF	BQQE	BQQV	BAQV	AQAE
24	28		*96029201*	*96505023*	*96549071*	*96549064*	*96549065*	*96587315*
32	38		*96591630*	*96505022*	*96549072*	*96549066*	*96549067*	*96587316*
42	48		*96591237*	*96504926*	*96587317*	*96549069*	*96587314*	*96549070*
55*		65	*96591633*	*96504927*	*96422160*	*96029558*	*96029562*	*96029572*
Burgmann specification								
• Type			**MG1/DW-G6**	**HJ92N/DW**	**MG1/DW-G6**	**MG1/DW-G6**	**MG1/DW-G6**	**M7N/DV-00**
Material			**AQ1EGG**	**AQIM2GG**		**Q1Q1VGG**	**AQ1VGG**	

- MG, a rubber bellows seal.
- M7N, an O-ring seal.
- HJ92N, a balanced O-ring seal on a smooth shaft.

* Sleeves are used for this shaft size.

Drawings of shaft seal types

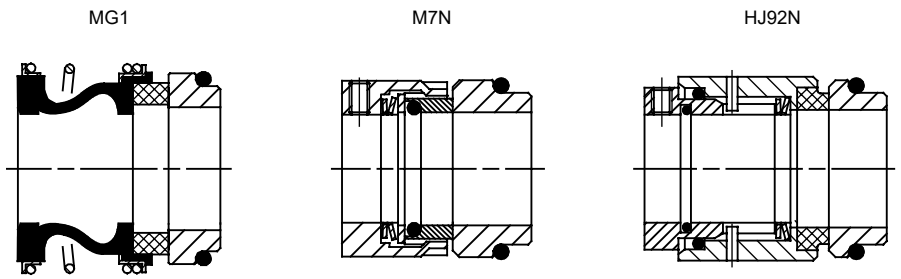

TM019228

Stuffing box, pos. 4130 (gland packing with shaft sleeve)

Nominal diameter [mm]		Type/kit No				Ring diameter [mm]
Shaft	Sleeve					
d5	d7	SNE	SNO	SNF	SKO	
24	35	*96029222*	*96029223*	*96029224*	*96029225*	8 x 8
32	45	*96029226*	*96029227*	*96029228*	*96029229*	10 x 10
42	55	*96029230*	*96029231*	*96029232*	*96029233*	10 x 10
55	65	*96029234*	*96029235*	*96029236*	*96029237*	12 x 12
Number of rings		4	5	4	4	
Specification		Buraflon 5846/16 bar: -30 to +120 °C			Thermoflons 6230S/16 bar: -30 to +160 °C	

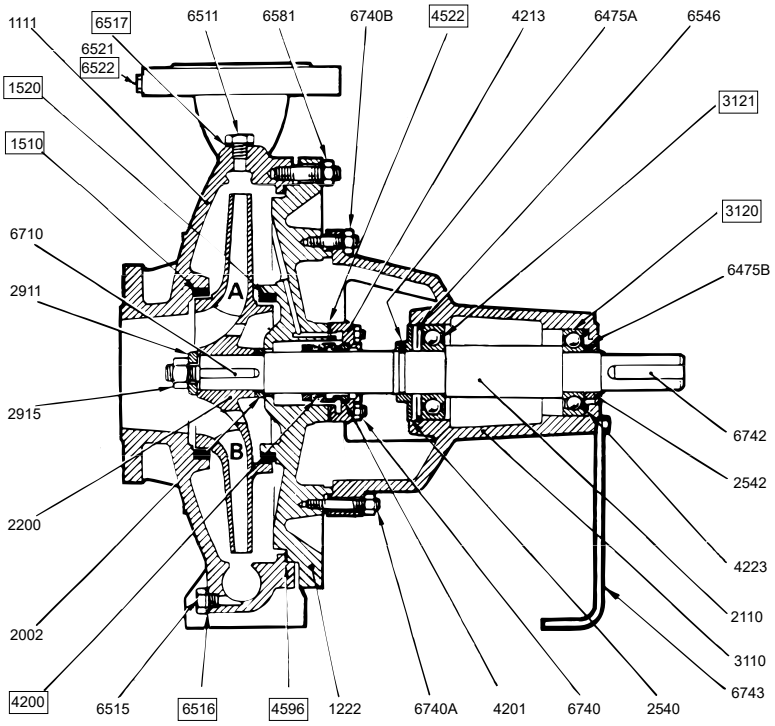

TM009796

The numbers with rectangle outside represent as recommended spare part.

Pos.	Description	Pos.	Description	Pos.	Description
1111	Pump casing	3120	Ball bearing	6516	Gasket
1222	Seal box	3121	Ball bearing	6517	Gasket
1510	Neck ring	4200	Rotating seal ring	6521	Pressure tapping plug
1520	Neck ring	4201	Stationary seat	6522	Gasket
2002	Spacing pipe	4213	Cover for seal	6546	Retaining ring
2110	Shaft	4223	Elastic washer	6581	Stud + nut
2200	Impeller	4522	Gasket for cover	6710	Impeller key
2540	Thrower	4596	Gasket for pump	6740	Stud + nut
2542	Thrower	6475A	Thrower screw	6740A	Stud + nut
2911	Impeller washer	6475B	Thrower screw	6740B	Stud + nut
2915	Lock nut	6511	Priming plug	6742	Coupling key
3110	Bearing housing	6515	Drain plug	6743	Foot

Model B

Contents of this chapter

Kit type	Page
Shaft seal	*60.3 Shaft seal*
Spacer ring for shaft seal	*60.5 Spacer ring for shaft seal*
O-ring	*60.7 O-ring*
Stuffing box, shaft sleeve and gland	*60.8 Stuffing box, shaft sleeve and gland*
Stuffing box, shaft guard and pipe	*60.9 Stuffing box, shaft guard and pipe*
Shaft, bearings, spacer ring and V-ring	*60.10 Shaft, bearings, spacer ring and V-ring*
Wear ring	*60.11 Wear ring*
Impeller	*60.12 Impeller*
Nut, washer and key for impeller	*60.13 Nut, washer and key for impeller*
Coupling, Grundfos standard coupling and flender spacer coupling	*60.14 Coupling*
Coupling, flender standard coupling	*60.15 Flender standard coupling*
Sensor for NKE Series 2000	*60.16 Sensor for NKE Series 2000*

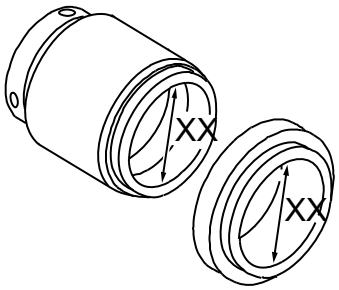

TM046827

Shaft seal		
MG13/RMG13	**HJ92N/HJ977**	**M7N**
		

Shaft seal designs

Content

Pos.	Description	BAQE	BAQV	BQQE	BQQV	BBQE	BBQV	GQQE	GQQV	DAQF
105	Shaft seal	1	1	1	1	1	1	1	1	1
Burgmann specification	Type	MG13/ XX-G6	MG13/ XX-G6	MG13/ XX-G6	MG13/ XX-G6	MG13/ XX-G6	MG13/ XX-G6	MG13S50/ XX-G6	MG13S50/ XX-G6	HJ92N/ XX-00
	Material	Material code: **A, B, C, D, E, F, G, H, I, J, K, M, N, P, S, T, U, W**								
		AQ1E GG	AQ1V GG	Q7Q7E GG	Q7Q7V GG	BQ1E GG	BQ1V GG	Q1Q1E GG	Q1Q1V GG	AQ1V9 GG
		Material code: **L, R**								
		AQ1E MM	AQ1V MM	Q1Q1E MM	Q1Q1V MM	BQ1E MM	BQ1V MM	Q1Q1E MM	Q1Q1V MM	AQ1V9 MM

Pos.	Description	DQQE	DQQV	DQQX	DQQK	AQQE	AQQX	AQQK	AQQV	AQAE	AQAV
105	Shaft seal	1	1	1	1	1	1	1	1	1	1
Burgmann specification	Type	HJ92N/ XX-00	HJ92N/ XX-00	HJ92N/ XX-00	HJ92N/ XX-00	M7N/ XX-00	M7N/ XX-00	M7N/ XX-00	M7N/ XX-00	M7N/ XX-00	M7N/ XX-00
	Material	Material code: **A, B, C, D, E, F, G, H, I, J, K, M, N, P, S, T, U, W**									
		Q6Q6E GG	Q6Q6V GG	Q6Q6X4 GG	Q6Q6K23 GG	Q1Q1E GG	Q1Q1X4 GG	Q1Q1K23 GG	Q1Q1V GG	Q1AE GG	Q1AV GG
		Material code: **L, R**									
		Q6Q6E MM	Q6Q6V MM	Q6Q6X4MM	Q6Q6K23MM	Q1Q1E MM	Q1Q1X4MM	Q1Q1K23 MM	Q1Q1V MM	Q1AE MM	Q1AV MM

Note: XX = 28, 38, 48, 55 or 60. XX is the internal diameter of the shaft seal.

Shaft seal

Material code: A, B, C, D, E, F, G, H, I, J, K, M, N, P, S, T, U, W

The material code can be found in the type designation on the nameplate.

NK 32 125 .1 A1 F 1 A E S BAQE

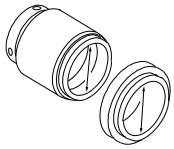

Shaft seal diameter

Pump type		Shaft seal dia.	BAQE	BAQV	BQQE	BQQV	BQQV [1]	BBQE	BBQV	BQBE	GQQE	GQQV	DAQF
			MG13	MG13	MG13	MG13	MG13	MG13	MG13	RMG13	MG13S	MG13S	HJ92N
32-	125.1	28	96488302	96548353	98434904	98434905	98670789	96551963	97769885	96548351	96488303	96504870	96548355
	160.1	28	96488302	96548353	98434904	98434905	98670789	96551963	97769885	96548351	96488303	96504870	96548355
	200.1	28	96488302	96548353	98434904	98434905	98670789	96551963	97769885	96548351	96488303	96504870	96548355
	125	28	96488302	96548353	98434904	98434905	98670789	96551963	97769885	96548351	96488303	96504870	96548355
	160	28	96488302	96548353	98434904	98434905	98670789	96551963	97769885	96548351	96488303	96504870	96548355
	200	28	96488302	96548353	98434904	98434905	98670789	96551963	97769885	96548351	96488303	96504870	96548355
	250	28	96488302	96548353	98434904	98434905	98670789	96551963	97769885	96548351	96488303	96504870	96548355
40-	125	28	96488302	96548353	98434904	98434905	98670789	96551963	97769885	96548351	96488303	96504870	96548355
	160	28	96488302	96548353	98434904	98434905	98670789	96551963	97769885	96548351	96488303	96504870	96548355
	200	28	96488302	96548353	98434904	98434905	98670789	96551963	97769885	96548351	96488303	96504870	96548355
	250	28	96488302	96548353	98434904	98434905	98670789	96551963	97769885	96548351	96488303	96504870	96548355
	315	38	96537605	96548357	98434906	98434908	98670790	96551928	97769887	96548356	96537606	96537608	96548359
50-	125	28	96488302	96548353	98434904	98434905	98670789	96551963	97769885	96548351	96488303	96504870	96548355
	160	28	96488302	96548353	98434904	98434905	98670789	96551963	97769885	96548351	96488303	96504870	96548355
	200	28	96488302	96548353	98434904	98434905	98670789	96551963	97769885	96548351	96488303	96504870	96548355
	250	28	96488302	96548353	98434904	98434905	98670789	96551963	97769885	96548351	96488303	96504870	96548355
	315	38	96537605	96548357	98434906	98434908	98670790	96551928	97769887	96548356	96537606	96537608	96548359
65-	125	28	96488302	96548353	98434904	98434905	98670789	96551963	97769885	96548351	96488303	96504870	96548355
	160	28	96488302	96548353	98434904	98434905	98670789	96551963	97769885	96548351	96488303	96504870	96548355
	200	28	96488302	96548353	98434904	98434905	98670789	96551963	97769885	96548351	96488303	96504870	96548355
	250	38	96537605	96548357	98434906	98434908	98670790	96551928	97769887	96548356	96537606	96537608	96548359
	315	38	96537605	96548357	98434906	98434908	98670790	96551928	97769887	96548356	96537606	96537608	96548359
80-	160	28	96488302	96548353	98434904	98434905	98670789	96551963	97769885	96548351	96488303	96504870	96548355
	200	38	96537605	96548357	98434906	98434908	98670790	96551928	97769887	96548356	96537606	96537608	96548359
	250	38	96537605	96548357	98434906	98434908	98670790	96551928	97769887	96548356	96537606	96537608	96548359
	315	38	96537605	96548357	98434906	98434908	98670790	96551928	97769887	96548356	96537606	96537608	96548359
	315 [2]	48	96306472	96658791	98434909	98434941	98670801	96658794	97769889	-	96306474	96658793	96658796
	400	48	96306472	96658791	98434909	98434941	98670801	96658794	97769889	-	96306474	96658793	96658796
100-	160	28	96488302	96548353	98434904	98434905	98670789	96551963	97769885	96548351	96488303	96504870	96548355
	200	38	96537605	96548357	98434906	98434908	98670790	96551928	97769887	96548356	96537606	96537608	96548359
	250	38	96537605	96548357	98434906	98434908	98670790	96551928	97769887	96548356	96537606	96537608	96548359
	250 [2]	48	96306472	96658791	98434909	98434941	98670801	96658794	97769889	-	96306474	96658793	96658796
	315	38	96537605	96548357	98434906	98434908	98670790	96551928	97769887	96548356	96537606	96537608	96548359
	315 [2]	48	96306472	96658791	98434909	98434941	98670801	96658794	97769889	-	96306474	96658793	96658796
	400	48	96306472	96658791	98434909	98434941	98670801	96658794	97769889	-	96306474	96658793	96658796
125-	200	38	96537605	96548357	98434906	98434908	98670790	96551928	97769887	96548356	96537606	96537608	96548359
	250	38	96537605	96548357	98434906	98434908	98670790	96551928	97769887	96548356	96537606	96537608	96548359
	250 [2]	48	96306472	96658791	98434909	98434941	98670801	96658794	97769889	-	96306474	96658793	96658796
	315	48	96306472	96658791	98434909	98434941	98670801	96658794	97769889	-	96306474	96658793	96658796
	400	48	96306472	96658791	98434909	98434941	98670801	96658794	97769889	-	96306474	96658793	96658796
	500	60	96658812	96658815	98434945	98434947	98670803	96658818	97769893	-	96658814	96658817	96658820

Pump type		Shaft seal dia.	BAQE	BAQV	BQQE	BQQV	BQQV [1]	BBQE	BBQV	BQBE	GQQE	GQQV	DAQF
			MG13	MG13	MG13	MG13	MG13	MG13	MG13	RMG13	MG13S	MG13S	HJ92N
150-	200	38	96537605	96548357	98434906	98434908	98670790	96551928	97769887	96548356	96537606	96537608	96548359
	250	48	96306472	96658791	98434909	98434941	98670801	96658794	97769889	-	96306474	96658793	96658796
	315.1	48	96306472	96658791	98434909	98434941	98670801	96658794	97769889	-	96306474	96658793	96658796
	315.2	48	96306472	96658791	98434909	98434941	98670801	96658794	97769889	-	96306474	96658793	96658796
	315	48	96306472	96658791	98434909	98434941	98670801	96658794	97769889	-	96306474	96658793	96658796
	400	48	96306472	96658791	98434909	98434941	98670801	96658794	97769889	-	96306474	96658793	96658796
	400 [2]	55	96306475	96658801	98434943	98434944	98670802	96658804	97769891	-	96306477	96658803	96658807
	500	60	96658812	96658815	98434945	98434947	98670803	96658818	97769893	-	96658814	96658817	96658820
200-	400	55	96306475	96658801	98434943	98434944	98670802	96658804	97769891	-	96306477	96658803	96658807
	450	55	96306475	96658801	98434943	98434944	98670802	96658804	97769891	-	96306477	96658803	96658807
250-	350	55	96306475	96658801	98434943	98434944	98670802	96658804	97769891	-	96306477	96658803	96658807
	400	55	96306475	96658801	98434943	98434944	98670802	96658804	97769891	-	96306477	96658803	96658807
	450	60	96658812	96658815	98434945	98434947	98670803	96658818	97769893	-	96658814	96658817	96658820
	500	60	96658812	96658815	98434945	98434947	98670803	96658818	97769893	-	96658814	96658817	96658820

1) PWIS-free shaft seal.

2) Oversize pump.

Content, see chapter Model B section Contents of this chapter.

Pump type		Shaft seal dia.	DQQE	DQQK	DQQV	DQQX	AQQE	AQQK	AQQV	AQQX	AQAE	AQAV
			HJ977GN	HJ977GN	HJ977GN	HJ977GN	M7N	M7N	M7N	M7N	M7N	M7N
32-	125.1	28	97769895	97769911	97769899	97769907	96551965	97769915	96551967	97769903	96551964	96551966
	160.1	28	97769895	97769911	97769899	97769907	96551965	97769915	96551967	97769903	96551964	96551966
	200.1	28	97769895	97769911	97769899	97769907	96551965	97769915	96551967	97769903	96551964	96551966
	125	28	97769895	97769911	97769899	97769907	96551965	97769915	96551967	97769903	96551964	96551966
	160	28	97769895	97769911	97769899	97769907	96551965	97769915	96551967	97769903	96551964	96551966
	200	28	97769895	97769911	97769899	97769907	96551965	97769915	96551967	97769903	96551964	96551966
	250	28	97769895	97769911	97769899	97769907	96551965	97769915	96551967	97769903	96551964	96551966
40-	125	28	97769895	97769911	97769899	97769907	96551965	97769915	96551967	97769903	96551964	96551966
	160	28	97769895	97769911	97769899	97769907	96551965	97769915	96551967	97769903	96551964	96551966
	200	28	97769895	97769911	97769899	97769907	96551965	97769915	96551967	97769903	96551964	96551966
	250	28	97769895	97769911	97769899	97769907	96551965	97769915	96551967	97769903	96551964	96551966
	315	38	97769897	97769913	97769901	97769909	96551960	97769917	96551962	97769905	96551929	96551961
50-	125	28	97769895	97769911	97769899	97769907	96551965	97769915	96551967	97769903	96551964	96551966
	160	28	97769895	97769911	97769899	97769907	96551965	97769915	96551967	97769903	96551964	96551966
	200	28	97769895	97769911	97769899	97769907	96551965	97769915	96551967	97769903	96551964	96551966
	250	28	97769895	97769911	97769899	97769907	96551965	97769915	96551967	97769903	96551964	96551966
	315	38	97769897	97769913	97769901	97769909	96551960	97769917	96551962	97769905	96551929	96551961
65-	125	28	97769895	97769911	97769899	97769907	96551965	97769915	96551967	97769903	96551964	96551966
	160	28	97769895	97769911	97769899	97769907	96551965	97769915	96551967	97769903	96551964	96551966
	200	28	97769895	97769911	97769899	97769907	96551965	97769915	96551967	97769903	96551964	96551966
	250	38	97769897	97769913	97769901	97769909	96551960	97769917	96551962	97769905	96551929	96551961
	315	38	97769897	97769913	97769901	97769909	96551960	97769917	96551962	97769905	96551929	96551961
80-	160	28	97769895	97769911	97769899	97769907	96551965	97769915	96551967	97769903	96551964	96551966
	200	38	97769897	97769913	97769901	97769909	96551960	97769917	96551962	97769905	96551929	96551961
	250	38	97769897	97769913	97769901	97769909	96551960	97769917	96551962	97769905	96551929	96551961
	315	38	97769897	97769913	97769901	97769909	96551960	97769917	96551962	97769905	96551929	96551961
	315 [1]	48	97685509	97685516	97685511	97685514	96658799	97685504	96658800	97685501	96658797	96658798
	400	48	97685509	97685516	97685511	97685514	96658799	97685504	96658800	97685501	96658797	96658798

Pump type		Shaft seal dia.	DQQE	DQQK	DQQV	DQQX	AQQE	AQQK	AQQV	AQQX	AQAE	AQAV
			HJ977GN	HJ977GN	HJ977GN	HJ977GN	M7N	M7N	M7N	M7N	M7N	M7N
100-	160	28	*97769895*	*97769911*	*97769899*	*97769907*	*96551965*	*97769915*	*96551967*	*97769903*	*96551964*	*96551966*
	200	38	*97769897*	*97769913*	*97769901*	*97769909*	*96551960*	*97769917*	*96551962*	*97769905*	*96551929*	*96551961*
	250	38	*97769897*	*97769913*	*97769901*	*97769909*	*96551960*	*97769917*	*96551962*	*97769905*	*96551929*	*96551961*
	250 [1)]	48	*97685509*	*97685516*	*97685511*	*97685514*	*96658799*	*97685504*	*96658800*	*97685501*	*96658797*	*96658798*
	315	38	*97769897*	*97769913*	*97769901*	*97769909*	*96551960*	*97769917*	*96551962*	*97769905*	*96551929*	*96551961*
	315 [1)]	48	*97685509*	*97685516*	*97685511*	*97685514*	*96658799*	*97685504*	*96658800*	*97685501*	*96658797*	*96658798*
	400	48	*97685509*	*97685516*	*97685511*	*97685514*	*96658799*	*97685504*	*96658800*	*97685501*	*96658797*	*96658798*
125-	200	38	*97769897*	*97769913*	*97769901*	*97769909*	*96551960*	*97769917*	*96551962*	*97769905*	*96551929*	*96551961*
	250	38	*97769897*	*97769913*	*97769901*	*97769909*	*96551960*	*97769917*	*96551962*	*97769905*	*96551929*	*96551961*
	250 [1)]	48	*97685509*	*97685516*	*97685511*	*97685514*	*96658799*	*97685504*	*96658800*	*97685501*	*96658797*	*96658798*
	315	48	*97685509*	*97685516*	*97685511*	*97685514*	*96658799*	*97685504*	*96658800*	*97685501*	*96658797*	*96658798*
	400	48	*97685509*	*97685516*	*97685511*	*97685514*	*96658799*	*97685504*	*96658800*	*97685501*	*96658797*	*96658798*
	500	60	*97685598*	*97685610*	*97685602*	*97685606*	*96658823*	*97685590*	*96658824*	*97685586*	*96658821*	*96658822*
150-	200	38	*97769897*	*97769913*	*97769901*	*97769909*	*96551960*	*97769917*	*96551962*	*97769905*	*96551929*	*96551961*
	250	48	*97685509*	*97685516*	*97685511*	*97685514*	*96658799*	*97685504*	*96658800*	*97685501*	*96658797*	*96658798*
	315.1	48	*97685509*	*97685516*	*97685511*	*97685514*	*96658799*	*97685504*	*96658800*	*97685501*	*96658797*	*96658798*
	315.2	48	*97685509*	*97685516*	*97685511*	*97685514*	*96658799*	*97685504*	*96658800*	*97685501*	*96658797*	*96658798*
	315	48	*97685509*	*97685516*	*97685511*	*97685514*	*96658799*	*97685504*	*96658800*	*97685501*	*96658797*	*96658798*
	400	48	*97685509*	*97685516*	*97685511*	*97685514*	*96658799*	*97685504*	*96658800*	*97685501*	*96658797*	*96658798*
	400 [1)]	55	*97685596*	*97685608*	*97685600*	*97685604*	*96658810*	*97685588*	*96658811*	*97685584*	*96658808*	*96658809*
	500	60	*97685598*	*97685610*	*97685602*	*97685606*	*96658823*	*97685590*	*96658824*	*97685586*	*96658821*	*96658822*
200-	400	55	*97685596*	*97685608*	*97685600*	*97685604*	*96658810*	*97685588*	*96658811*	*97685584*	*96658797*	*96658798*
	450	55	*97685596*	*97685608*	*97685600*	*97685604*	*96658810*	*97685588*	*96658811*	*97685584*	*96658797*	*96658798*
250-	350	55	*97685596*	*97685608*	*97685600*	*97685604*	*96658810*	*97685588*	*96658811*	*97685584*	*96658797*	*96658798*
	400	55	*97685596*	*97685608*	*97685600*	*97685604*	*96658810*	*97685588*	*96658811*	*97685584*	*96658797*	*96658798*
	450	60	*97685598*	*97685610*	*97685602*	*97685606*	*96658823*	*97685590*	*96658824*	*97685586*	*96658821*	*96658822*
	500	60	*97685598*	*97685610*	*97685602*	*97685606*	*96658823*	*97685590*	*96658824*	*97685586*	*96658821*	*96658822*

1) Oversize pump.

Content, see chapter Model B section Contents of this chapter.

Shaft seal

Material code: L, R

The material code can be found in the type designation on the nameplate.

NK 32-125.1 A1 F1(L)E S BAQE

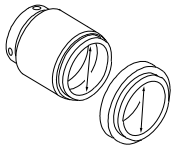

Shaft seal diameter

Pump type		Shaft seal dia.	BAQE	BAQV	BQQE	BQQV	BQQV [1]	BBQE	BBQV	BQBE	GQQE	GQQV	DAQF
			MG13	MG13	MG13	MG13	MG13	MG13	MG13	RMG13	MG13S	MG13S	HJ92N
	125.1	28	*96658825*	*96658827*	*96658826*	*96658828*	*98670804*	*96658829*	*97769886*	*96658830*	-	-	*96658831*
	160.1	28	*96658825*	*96658827*	*96658826*	*96658828*	*98670804*	*96658829*	*97769886*	*96658830*	-	-	*96658831*
	200.1	28	*96658825*	*96658827*	*96658826*	*96658828*	*98670804*	*96658829*	*97769886*	*96658830*	-	-	*96658831*
32-	125	28	*96658825*	*96658827*	*96658826*	*96658828*	*98670804*	*96658829*	*97769886*	*96658830*	-	-	*96658831*
	160	28	*96658825*	*96658827*	*96658826*	*96658828*	*98670804*	*96658829*	*97769886*	*96658830*	-	-	*96658831*
	200	28	*96658825*	*96658827*	*96658826*	*96658828*	*98670804*	*96658829*	*97769886*	*96658830*	-	-	*96658831*
	250	28	*96658825*	*96658827*	*96658826*	*96658828*	*98670804*	*96658829*	*97769886*	*96658830*	-	-	*96658831*
	125	28	*96658825*	*96658827*	*96658826*	*96658828*	*98670804*	*96658829*	*97769886*	*96658830*	-	-	*96658831*
	160	28	*96658825*	*96658827*	*96658826*	*96658828*	*98670804*	*96658829*	*97769886*	*96658830*	-	-	*96658831*
40-	200	28	*96658825*	*96658827*	*96658826*	*96658828*	*98670804*	*96658829*	*97769886*	*96658830*	-	-	*96658831*
	250	28	*96658825*	*96658827*	*96658826*	*96658828*	*98670804*	*96658829*	*97769886*	*96658830*	-	-	*96658831*
	315	38	*96658836*	*96658838*	*96658837*	*96658839*	*98670805*	*96658850*	*97769888*	*96658851*	-	-	*96658852*
	125	28	*96658825*	*96658827*	*96658826*	*96658828*	*98670804*	*96658829*	*97769886*	*96658830*	-	-	*96658831*
	160	28	*96658825*	*96658827*	*96658826*	*96658828*	*98670804*	*96658829*	*97769886*	*96658830*	-	-	*96658831*
50-	200	28	*96658825*	*96658827*	*96658826*	*96658828*	*98670804*	*96658829*	*97769886*	*96658830*	-	-	*96658831*
	250	28	*96658825*	*96658827*	*96658826*	*96658828*	*98670804*	*96658829*	*97769886*	*96658830*	-	-	*96658831*
	315	38	*96658836*	*96658838*	*96658837*	*96658839*	*98670805*	*96658850*	*97769888*	*96658851*	-	-	*96658852*
	125	28	*96658825*	*96658827*	*96658826*	*96658828*	*98670804*	*96658829*	*97769886*	*96658830*	-	-	*96658831*
	160	28	*96658825*	*96658827*	*96658826*	*96658828*	*98670804*	*96658829*	*97769886*	*96658830*	-	-	*96658831*
65-	200	28	*96658825*	*96658827*	*96658826*	*96658828*	*98670804*	*96658829*	*97769886*	*96658830*	-	-	*96658831*
	250	38	*96658836*	*96658838*	*96658837*	*96658839*	*98670805*	*96658850*	*97769888*	*96658851*	-	-	*96658852*
	315	38	*96658836*	*96658838*	*96658837*	*96658839*	*98670805*	*96658850*	*97769888*	*96658851*	-	-	*96658852*
	160	28	*96658825*	*96658827*	*96658826*	*96658828*	*98670804*	*96658829*	*97769886*	*96658830*	-	-	*96658831*
	200	38	*96658836*	*96658838*	*96658837*	*96658839*	*98670805*	*96658850*	*97769888*	*96658851*	-	-	*96658852*
80-	250	38	*96658836*	*96658838*	*96658837*	*96658839*	*98670805*	*96658850*	*97769888*	*96658851*	-	-	*96658852*
	315	38	*96658836*	*96658838*	*96658837*	*96658839*	*98670805*	*96658850*	*97769888*	*96658851*	-	-	*96658852*
	315 [2]	48	*96658857*	*96658860*	*96658858*	*96658861*	*98670806*	*96658862*	*97769890*	-	-	-	*96658863*
	400	48	*96658857*	*96658860*	*96658858*	*96658861*	*98670806*	*96658862*	*97769890*	-	-	-	*96658863*
	160	28	*96658825*	*96658827*	*96658826*	*96658828*	*98670804*	*96658829*	*97769886*	*96658830*	-	-	*96658831*
	200	38	*96658836*	*96658838*	*96658837*	*96658839*	*98670805*	*96658850*	*97769888*	*96658851*	-	-	*96658852*
	250	38	*96658836*	*96658838*	*96658837*	*96658839*	*98670805*	*96658850*	*97769888*	*96658851*	-	-	*96658852*
100-	250 [2]	48	*96658857*	*96658860*	*96658858*	*96658861*	*98670806*	*96658862*	*97769890*	-	-	-	*96658863*
	315	38	*96658836*	*96658838*	*96658837*	*96658839*	*98670805*	*96658850*	*97769888*	*96658851*	-	-	*96658852*
	315 [2]	48	*96658857*	*96658860*	*96658858*	*96658861*	*98670806*	*96658862*	*97769890*	-	-	-	*96658863*
	400	48	*96658857*	*96658860*	*96658858*	*96658861*	*98670806*	*96658862*	*97769890*	-	-	-	*96658863*
	200	38	*96658836*	*96658838*	*96658837*	*96658839*	*98670805*	*96658850*	*97769888*	*96658851*	-	-	*96658852*
	250	38	*96658836*	*96658838*	*96658837*	*96658839*	*98670805*	*96658850*	*97769888*	*96658851*	-	-	*96658852*
125-	250 [2]	48	*96658857*	*96658860*	*96658858*	*96658861*	*98670806*	*96658862*	*97769890*	-	-	-	*96658863*
	315	48	*96658857*	*96658860*	*96658858*	*96658861*	*98670806*	*96658862*	*97769890*	-	-	-	*96658863*
	400	48	*96658857*	*96658860*	*96658858*	*96658861*	*98670806*	*96658862*	*97769890*	-	-	-	*96658863*
	500	60	*97769920*	*97769922*	*97769928*	*97769930*	*98670808*	*97769932*	*97769894*	-	-	-	*97536595*

Pump type		Shaft seal dia.	BAQE	BAQV	BQQE	BQQV	BQQV [1]	BBQE	BBQV	BQBE	GQQE	GQQV	DAQF
			MG13	MG13	MG13	MG13	MG13	MG13	MG13	RMG13	MG13S	MG13S	HJ92N
150-	200	38	*96658836*	*96658838*	*96658837*	*96658839*	*98670805*	*96658850*	*97769888*	*96658851*	-	-	*96658852*
	250	48	*96658857*	*96658860*	*96658858*	*96658861*	*98670806*	*96658862*	*97769890*	-	-	-	*96658863*
	315.1	48	*96658857*	*96658860*	*96658858*	*96658861*	*98670806*	*96658862*	*97769890*	-	-	-	*96658863*
	315.2	48	*96658857*	*96658860*	*96658858*	*96658861*	*98670806*	*96658862*	*97769890*	-	-	-	*96658863*
	315	48	*96658857*	*96658860*	*96658858*	*96658861*	*98670806*	*96658862*	*97769890*	-	-	-	*96658863*
	400	48	*96658857*	*96658860*	*96658858*	*96658861*	*98670806*	*96658862*	*97769890*	-	-	-	*96658863*
	400 [2]	55	*97769919*	*97769921*	*97769927*	*97769929*	*98670807*	*97769931*	*97769892*	-	-	-	*97536552*
	500	60	*97769920*	*97769922*	*97769928*	*97769930*	*98670808*	*97769932*	*97769894*	-	-	-	*97536595*
200-	400	55	-	-	-	-	-	-	-	-	-	-	-
	450	55	-	-	-	-	-	-	-	-	-	-	-
250-	350	55	-	-	-	-	-	-	-	-	-	-	-
	400	55	-	-	-	-	-	-	-	-	-	-	-
	450	60	-	-	-	-	-	-	-	-	-	-	-
	500	60	-	-	-	-	-	-	-	-	-	-	-

1) PWIS-free shaft seal.

2) Oversize pump.

Content, see chapter Model B section Contents of this chapter.

Pump type		Shaft seal dia.	DQQE	DQQK	DQQV	DQQX	AQQE	AQQK	AQQV	AQQX	AQAE	AQAV
			HJ977GN	HJ977GN	HJ977GN	HJ977GN	M7N	M7N	M7N	M7N	M7N	M7N
32-	125.1	28	*97769896*	*97769912*	*97769900*	*97769908*	*96658834*	*97769916*	*96658835*	*97769904*	*96658832*	*96658833*
	160.1	28	*97769896*	*97769912*	*97769900*	*97769908*	*96658834*	*97769916*	*96658835*	*97769904*	*96658832*	*96658833*
	200.1	28	*97769896*	*97769912*	*97769900*	*97769908*	*96658834*	*97769916*	*96658835*	*97769904*	*96658832*	*96658833*
	125	28	*97769896*	*97769912*	*97769900*	*97769908*	*96658834*	*97769916*	*96658835*	*97769904*	*96658832*	*96658833*
	160	28	*97769896*	*97769912*	*97769900*	*97769908*	*96658834*	*97769916*	*96658835*	*97769904*	*96658832*	*96658833*
	200	28	*97769896*	*97769912*	*97769900*	*97769908*	*96658834*	*97769916*	*96658835*	*97769904*	*96658832*	*96658833*
	250	28	*97769896*	*97769912*	*97769900*	*97769908*	*96658834*	*97769916*	*96658835*	*97769904*	*96658832*	*96658833*
40-	125	28	*97769896*	*97769912*	*97769900*	*97769908*	*96658834*	*97769916*	*96658835*	*97769904*	*96658832*	*96658833*
	160	28	*97769896*	*97769912*	*97769900*	*97769908*	*96658834*	*97769916*	*96658835*	*97769904*	*96658832*	*96658833*
	200	28	*97769896*	*97769912*	*97769900*	*97769908*	*96658834*	*97769916*	*96658835*	*97769904*	*96658832*	*96658833*
	250	28	*97769896*	*97769912*	*97769900*	*97769908*	*96658834*	*97769916*	*96658835*	*97769904*	*96658832*	*96658833*
	315	38	*97769898*	*97769914*	*97769902*	*97769910*	*96658855*	*97769918*	*96658856*	*97769906*	*96658853*	*96658854*
50-	125	28	*97769896*	*97769912*	*97769900*	*97769908*	*96658834*	*97769916*	*96658835*	*97769904*	*96658832*	*96658833*
	160	28	*97769896*	*97769912*	*97769900*	*97769908*	*96658834*	*97769916*	*96658835*	*97769904*	*96658832*	*96658833*
	200	28	*97769896*	*97769912*	*97769900*	*97769908*	*96658834*	*97769916*	*96658835*	*97769904*	*96658832*	*96658833*
	250	28	*97769896*	*97769912*	*97769900*	*97769908*	*96658834*	*97769916*	*96658835*	*97769904*	*96658832*	*96658833*
	315	38	*97769898*	*97769914*	*97769902*	*97769910*	*96658855*	*97769918*	*96658856*	*97769906*	*96658853*	*96658854*
65-	125	28	*97769896*	*97769912*	*97769900*	*97769908*	*96658834*	*97769916*	*96658835*	*97769904*	*96658832*	*96658833*
	160	28	*97769896*	*97769912*	*97769900*	*97769908*	*96658834*	*97769916*	*96658835*	*97769904*	*96658832*	*96658833*
	200	28	*97769896*	*97769912*	*97769900*	*97769908*	*96658834*	*97769916*	*96658835*	*97769904*	*96658832*	*96658833*
	250	38	*97769898*	*97769914*	*97769902*	*97769910*	*96658855*	*97769918*	*96658856*	*97769906*	*96658853*	*96658854*
	315	38	*97769898*	*97769914*	*97769902*	*97769910*	*96658855*	*97769918*	*96658856*	*97769906*	*96658853*	*96658854*
80-	160	28	*97769896*	*97769912*	*97769900*	*97769908*	*96658834*	*97769916*	*96658835*	*97769904*	*96658832*	*96658833*
	200	38	*97769898*	*97769914*	*97769902*	*97769910*	*96658855*	*97769918*	*96658856*	*97769906*	*96658853*	*96658854*
	250	38	*97769898*	*97769914*	*97769902*	*97769910*	*96658855*	*97769918*	*96658856*	*97769906*	*96658853*	*96658854*
	315	38	*97769898*	*97769914*	*97769902*	*97769910*	*96658855*	*97769918*	*96658856*	*97769906*	*96658853*	*96658854*
	315 [1]	48	*97685510*	*97685518*	*97685513*	*97685515*	*96658866*	*97685505*	*96658867*	*97685502*	*96658864*	*96658865*
	400	48	*97685510*	*97685518*	*97685513*	*97685515*	*96658866*	*97685505*	*96658867*	*97685502*	*96658864*	*96658865*

Pump type		Shaft seal dia.	DQQE	DQQK	DQQV	DQQX	AQQE	AQQK	AQQV	AQQX	AQAE	AQAV
			HJ977GN	HJ977GN	HJ977GN	HJ977GN	M7N	M7N	M7N	M7N	M7N	M7N
100-	160	28	*97769896*	*97769912*	*97769900*	*97769908*	*96658834*	*97769916*	*96658835*	*97769904*	*96658832*	*96658833*
	200	38	*97769898*	*97769914*	*97769902*	*97769910*	*96658855*	*97769918*	*96658856*	*97769906*	*96658853*	*96658854*
	250	38	*97769898*	*97769914*	*97769902*	*97769910*	*96658855*	*97769918*	*96658856*	*97769906*	*96658853*	*96658854*
	250 [1)]	48	*97685510*	*97685518*	*97685513*	*97685515*	*96658866*	*97685505*	*96658867*	*97685502*	*96658864*	*96658865*
	315	38	*97769898*	*97769914*	*97769902*	*97769910*	*96658855*	*97769918*	*96658856*	*97769906*	*96658853*	*96658854*
	315 [1)]	48	*97685510*	*97685518*	*97685513*	*97685515*	*96658866*	*97685505*	*96658867*	*97685502*	*96658864*	*96658865*
	400	48	*97685510*	*97685518*	*97685513*	*97685515*	*96658866*	*97685505*	*96658867*	*97685502*	*96658864*	*96658865*
125-	200	38	*97769898*	*97769914*	*97769902*	*97769910*	*96658855*	*97769918*	*96658856*	*97769906*	*96658853*	*96658854*
	250	38	*97769898*	*97769914*	*97769902*	*97769910*	*96658855*	*97769918*	*96658856*	*97769906*	*96658853*	*96658854*
	250 [1)]	48	*97685510*	*97685518*	*97685513*	*97685515*	*96658866*	*97685505*	*96658867*	*97685502*	*96658864*	*96658865*
	315	48	*97685510*	*97685518*	*97685513*	*97685515*	*96658866*	*97685505*	*96658867*	*97685502*	*96658864*	*96658865*
	400	48	*97685510*	*97685518*	*97685513*	*97685515*	*96658866*	*97685505*	*96658867*	*97685502*	*96658864*	*96658865*
	500	60	*97685599*	*97685611*	*97685603*	*97685607*	*97536585*	*97685591*	*97536586*	*97685587*	*97769924*	*97769926*
150-	200	38	*97769898*	*97769914*	*97769902*	*97769910*	*96658855*	*97769918*	*96658856*	*97769906*	*96658853*	*96658854*
	250	48	*97685510*	*97685518*	*97685513*	*97685515*	*96658866*	*97685505*	*96658867*	*97685502*	*96658864*	*96658865*
	315.1	48	*97685510*	*97685518*	*97685513*	*97685515*	*96658866*	*97685505*	*96658867*	*97685502*	*96658864*	*96658865*
	315.2	48	*97685510*	*97685518*	*97685513*	*97685515*	*96658866*	*97685505*	*96658867*	*97685502*	*96658864*	*96658865*
	315	48	*97685510*	*97685518*	*97685513*	*97685515*	*96658866*	*97685505*	*96658867*	*97685502*	*96658864*	*96658865*
	400	48	*97685510*	*97685518*	*97685513*	*97685515*	*96658866*	*97685505*	*96658867*	*97685502*	*96658864*	*96658865*
	400 [1)]	55	*97685597*	*97685609*	*97685601*	*97685605*	*97536543*	*97685589*	*97536544*	*97685585*	*97769923*	*97769925*
	500	60	*97685599*	*97685611*	*97685603*	*97685607*	*97536585*	*97685591*	*97536586*	*97685587*	*97769924*	*97769926*
200-	400	55	-	-	-	-	-	-	-	-	-	-
	450	55	-	-	-	-	-	-	-	-	-	-
250-	350	55	-	-	-	-	-	-	-	-	-	-
	400	55	-	-	-	-	-	-	-	-	-	-
	450	60	-	-	-	-	-	-	-	-	-	-
	500	60	-	-	-	-	-	-	-	-	-	-

1) Oversize pump.

Content, see chapter Model B section Contents of this chapter.

Spacer ring for shaft seal

(pos. 105b and 105c)

28, 48, 55 and 60 mm	38 mm	
	Design 1	Design 2
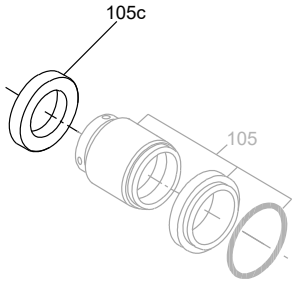 *HJ92N, M7N*	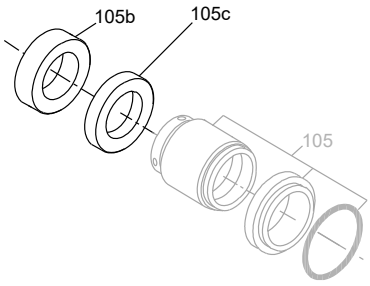 *HJ92N, M7N, HJ977GN* 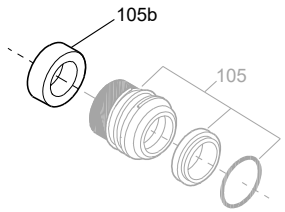 *MG13 RMG13*	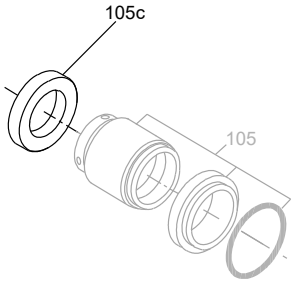 *HJ92N, M7N, HJ977GN*

Spacer ring

Pos.	Shaft seal diameter [mm]	Description	Length [mm]	Material code	
				A, B, C, D, E, F, G, H, K, M, N, P, S	I, J, L, R, T, U, W
105b	38	Spacer ring	15.5	*96591277*	*96938601*
105c	28		7.5	*96938597*	*96938598*
	38		10	*96938599*	*96938600*
	48		15	*96938602*	*96938603*
	55		22.5	*96938604*	*96938605*
	60		17.5	*96938606*	*96938607*
105b and 1050c	38		15.5	*96930797*	*96930799*
			10		

38 mm spacer ring			
Pump type		Shaft seal dia.	Design
32-	125.1	28	-
	160.1	28	-
	200.1	28	-
	125	28	-
	160	28	-
	200	28	-
	250	28	-
40-	125	28	-
	160	28	-
	200	28	-
	250	28	-
	315	38	2
50-	125	28	-
	160	28	-
	200	28	-
	250	28	-
	315	38	2
65-	125	28	-
	160	28	-
	200	28	-
	250	38	1
	315	38	1
80-	160	28	-
	200	38	1
	250	38	1
	315	38/48	1
	400	48	-
100-	160	28	-
	200	38	1
	250	38/48	1
	315	38/48	1
	400	48	-
125-	200	38	-
	250	38/48	1
	315	48	-
	400	48	-
	500	60	-
150-	200	38	1
	250	48	-
	315.1	48	-
	315.2	48	-
	315	48	-
	400	48/55	-
	500	60	-
200-	400	55	-
	450	55	-
250-	350	55	-
	400	55	-
	450	60	-
	500	60	-

O-ring

Shaft seal arrangement, single seal "S" and stuffing box "B"

NK 32-125.1 A1 F 2 N V(S)BAQV

NK 32-125.1 A1 F 2 N V(B)SNEA

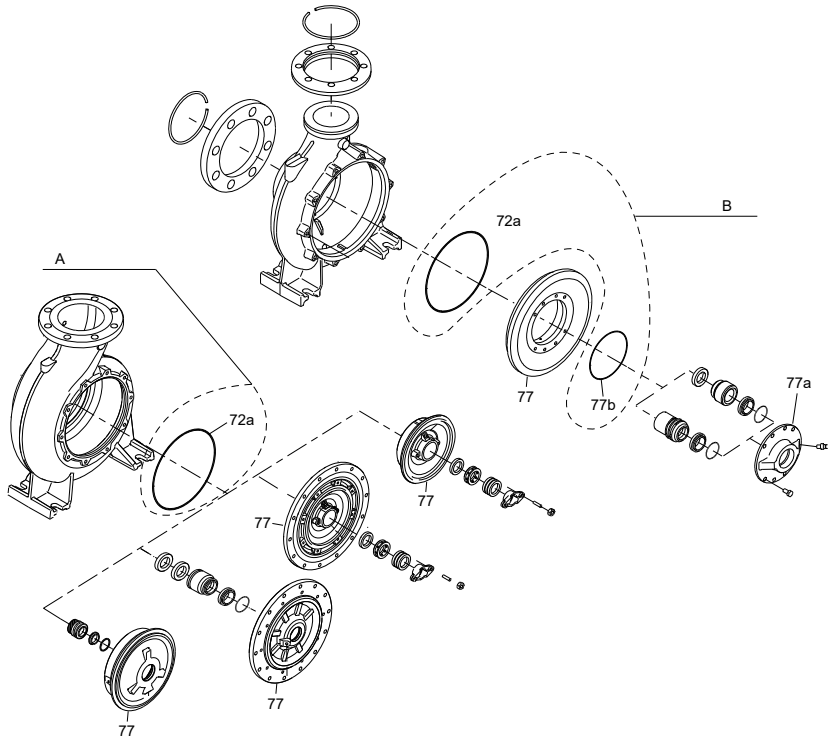

TM046803

Pos.	Description	Explanation
A	Example 1	
B	Example 2	
72a	Kit 1	1 x O-ring
77b	Kit 2	1 x O-ring

Code	Material
E	EPDM
M	FEPS
K	FFKM
V	FKM
F	FXM
X	HNBR

The O-ring materials can be found in the type designation on the nameplate.

Example 1 - pump with cover, pos. 77 only

NK 32-125.1 A1 F 2 N(V)S BAQV

Code V describes a pump with O-ring kit 1 containing an FKM O-ring (V).

Example 2 - pump with cover, pos. 77 and 77a

NK 32-125.1 A1 F 2 N(V)S BAQV

Code V describes a pump with cover 77 and 77a with O-ring kit 1 + 2 containing FKM O-rings (V).

Pump type		Shaft seal diameter [mm]	O-ring kit 1 (pos. 72a)						O-ring kit 2 (pos. 77b)	
			E (EPDM)	M (FEPS)	K (FFKM)	V (FKM)	F (FXM)	X (HNBR)	E (EPDM)	V (FKM)
32-	125.1	28	97757659	97904673	97904674	97757697	97790022	97904675	97761203	97761204
	160.1	28	97757659	97904673	97904674	97757697	97790022	97904675	97761203	97761204
	200.1	28	97757671	97904679	97904691	97757698	97790080	97904692	97761203	97761204
	125	28	97757659	97904673	97904674	97757697	97790022	97904675	97761203	97761204
	160	28	97757659	97904673	97904674	97757697	97790022	97904675	97761203	97761204
	200	28	97757671	97904679	97904691	97757698	97790080	97904692	97761203	97761204
	250	28	97757672	97904676	97904677	97757699	97790081	97904678	97761203	97761204
40-	125	28	97757659	97904673	97904674	97757697	97790022	97904675	97761203	97761204
	160	28	97757659	97904673	97904674	97757697	97790022	97904675	97761203	97761204
	200	28	97757671	97904679	97904691	97757698	97790080	97904692	97761203	97761204
	250	28	97757672	97904676	97904677	97757699	97790081	97904678	97761203	97761204
	315	38	97757675	96887770	96887761	97757705	96887764	96887767	97761203	97761204
50-	125	28	97757659	97904673	97904674	97757697	97790022	97904675	97761203	97761204
	160	28	97757659	97904673	97904674	97757697	97790022	97904675	97761203	97761204
	200	28	97757671	97904679	97904691	97757698	97790080	97904692	97761203	97761204
	250	28	97757672	97904676	97904677	97757699	97790081	97904678	97761203	97761204
	315	38	97757675	96887770	96887761	97757705	96887764	96887767	97761203	97761204
65-	125	28	97757659	97904673	97904674	97757697	97790022	97904675	97761203	97761204
	160	28	97757659	97904673	97904674	97757697	97790022	97904675	97761203	97761204
	200	28	97757671	97904679	97904691	97757698	97790080	97904692	97761203	97761204
	250	38	97757673	96887769	96887760	97757703	96887763	96887766	97761203	97761204
	315	38	97757675	96887770	96887761	97757705	96887764	96887767	97761203	97761204
80-	160	28	97757659	97904673	97904674	97757697	97790022	97904675	97761203	97761204
	200	38	97757671	97904679	97904691	97757698	97790080	97904692	97761203	97761204
	250	38	97757673	96887769	96887760	97757703	96887763	96887766	97761203	97761204
	315	38	97757675	96887770	96887761	97757705	96887764	96887767	97761203	97761204
	315 [1]	48	97757675	96887770	96887761	97757705	96887764	96887767	97757693	97757714
	400	48	97757676	96887771	96887762	97757707	96887765	96887768	97757693	97757714
100-	160	28	97757659	97904673	97904674	97757697	97790022	97904675	97761203	97761204
	200	38	97757671	97904679	97904691	97757698	97790080	97904692	97761203	97761204
	250	38	97757673	96887769	96887760	97757703	96887763	96887766	97761203	97761204
	250 [1]	48	97757673	96887769	96887760	97757703	96887763	96887766	97757693	97757714
	315	38	97757675	96887770	96887761	97757705	96887764	96887767	97761203	97761204
	315 [1]	48	97757675	96887770	96887761	97757705	96887764	96887767	97757693	97757714
	400	48	97757676	96887771	96887762	97757707	96887765	96887768	97757693	97757714
125 -	200	38	97757671	97904679	97904691	97757698	97790080	97904692	97761203	97761204
	250	38	97757673	96887769	96887760	97757703	96887763	96887766	97761203	97761204
	250 [1]	48	97757673	96887769	96887760	97757703	96887763	96887766	97757693	97757714
	315	48	97757675	96887770	96887761	97757705	96887764	96887767	97757693	97757714
	400	48	97757676	96887771	96887762	97757707	96887765	96887768	97757693	97757714
	500	60	97757679	97536641	97536606	97757712	97536608	97536609	97757693	97757714
150-	200	38	97757671	97904679	97904691	97757698	97790080	97904692	97761203	97761204
	250	48	97757673	96887769	96887760	97757703	96887763	96887766	97757693	97757714
	315.1	48	97757675	96887770	96887761	97757705	96887764	96887767	97757693	97757714
	315.2	48	97757675	96887770	96887761	97757705	96887764	96887767	97757693	97757714
	315	48	97757675	96887770	96887761	97757705	96887764	96887767	97757693	97757714
	400	48	97757676	96887771	96887762	97757707	96887765	96887768	97757693	97757714
	400 [1]	55	97757676	96887771	96887762	97757707	96887765	96887768	97757693	97757714
	500	60	97757679	97536641	97536606	97757712	97536608	97536609	97757693	97757714
200-	400	55	97757676	-	-	97757707	96887765	-	97757693	97757714
	450	55	97757677	-	-	97757708	97790102	-	97757693	97757714

Pump type		Shaft seal diameter [mm]	O-ring kit 1 (pos. 72a)						O-ring kit 2 (pos. 77b)	
			E (EPDM)	M (FEPS)	K (FFKM)	V (FKM)	F (FXM)	X (HNBR)	E (EPDM)	V (FKM)
250-	350	55	*97757676*	-	-	*97757707*	*96887765*	-	*97757693*	*97757714*
	400	55	*97757676*	-	-	*97757707*	*96887765*	-	*97757693*	*97757714*
	450	60	*97757677*	-	-	*97757708*	*97790102*	-	*97757693*	*97757714*
	500	60	*97757679*	-	-	*97757712*	*97536608*	-	*97757693*	*97757714*

1) Oversize pump.

Stuffing box, shaft sleeve and gland

Stuffing box

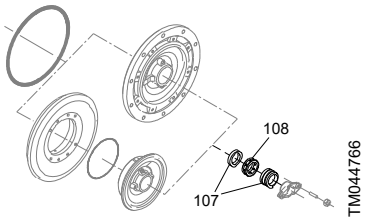

Kit, stuffing box

107:Packing rings
108:1 x distribution ring (SNE/SNF)

Shaft sleeve

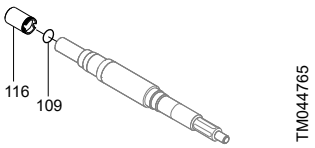

Kit, shaft sleeve

109:1 x O-ring
116:1 x shaft sleeve

Gland

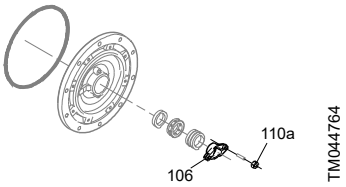

Kit, gland

106:2 x gland
110a:2 x nut

Pump type		Material code	A, B, C, D, E, F, G, H, S, T						
		Pump shaft diameter d5	Stuffing box for cast iron pump				Shaft sleeve		Gland
			SNEA, SNEC, SNFA, SNFC	SNEB, SNED, SNFB, SNFD	SNOA, SNOC	SNOB, SNOD	E (EPDM)	V (FKM)	
	125.1	24	96877095	96877097	96877099	96877101	96861484	98796245	96861467
	160.1	24	96877095	96877097	96877099	96877101	96861484	98796245	96861467
	200.1	24	96877095	96877097	96877099	96877101	96861484	98796245	96861467
32 -	125	24	96877095	96877097	96877099	96877101	96861484	98796245	96861467
	160	24	96877095	96877097	96877099	96877101	96861484	98796245	96861467
	200	24	96877095	96877097	96877099	96877101	96861484	98796245	96861467
	250	24	96877095	96877097	96877099	96877101	96861484	98796245	96861467
	125	24	96877095	96877097	96877099	96877101	96861484	98796245	96861467
	160	24	96877095	96877097	96877099	96877101	96861484	98796245	96861467
40 -	200	24	96877095	96877097	96877099	96877101	96861484	98796245	96861467
	250	24	96877095	96877097	96877099	96877101	96861484	98796245	96861467
	315	32	96877123	96877125	96877127	96877129	96861485	98796246	96861469
	125	24	96877095	96877097	96877099	96877101	96861484	98796245	96861467
	160	24	96877095	96877097	96877099	96877101	96861484	98796245	96861467
50 -	200	24	96877095	96877097	96877099	96877101	96861484	98796245	96861467
	250	24	96877095	96877097	96877099	96877101	96861484	98796245	96861467
	315	32	96877123	96877125	96877127	96877129	96861485	98796246	96861469
	125	24	96877095	96877097	96877099	96877101	96861484	98796245	96861467
	160	24	96877095	96877097	96877099	96877101	96861484	98796245	96861467
65 -	200	24	96877095	96877097	96877099	96877101	96861484	98796245	96861467
	250	32	96877123	96877125	96877127	96877129	96861485	98796246	96861469
	315	32	96877123	96877125	96877127	96877129	96861485	98796246	96861469
	160	24	96877095	96877097	96877099	96877101	96861484	98796245	96861467
	200	32	96877123	96877125	96877127	96877129	96861485	98796246	96861469
80 -	250	32	96877123	96877125	96877127	96877129	96861485	98796246	96861469
	315	32	96877123	96877125	96877127	96877129	96861485	98796246	96861469
	400	42	98796172	98796173	98796176	98796177	98796233	98796160	98796251
	160	24	96877095	96877097	96877099	96877101	96861484	98796245	96861467
	200	32	96877123	96877125	96877127	96877129	96861485	98796246	96861469
100 -	250	32	96877123	96877125	96877127	96877129	96861485	98796246	96861469
	315	32	96877123	96877125	96877127	96877129	96861485	98796246	96861469
	400	42	98796172	98796173	98796176	98796177	98796233	98796160	98796251
	200	32	96877123	96877125	96877127	96877129	96861485	98796246	96861469
	250	32	96877123	96877125	96877127	96877129	96861485	98796246	96861469
125 -	315	42	98796172	98796173	98796176	98796177	98796233	98796160	98796251
	400	42	98796172	98796173	98796176	98796177	98796233	98796160	98796251
	500	60	98796188	98796189	98796192	98796193	98796239	98796226	98796255

Pump type		Material code	A, B, C, D, E, F, G, H, S, T						
		Pump shaft diameter d5	Stuffing box for cast iron pump				Shaft sleeve		Gland
			SNEA, SNEC, SNFA, SNFC	SNEB, SNED, SNFB, SNFD	SNOA, SNOC	SNOB, SNOD	E (EPDM)	V (FKM)	
150 -	200	32	96877123	96877125	96877127	96877129	96861485	98796246	96861469
	250	42	98796172	98796173	98796176	98796177	98796233	98796160	98796251
	315.1	42	98796172	98796173	98796176	98796177	98796233	98796160	98796251
	315.2	42	98796172	98796173	98796176	98796177	98796233	98796160	98796251
	315	42	98796172	98796173	98796176	98796177	98796233	98796160	98796251
	400	42	98796172	98796173	98796176	98796177	98796233	98796160	98796251
	500	60	98796188	98796189	98796192	98796193	98796239	98796226	98796255
200 -	400	48	98796180	98796181	98796184	98796185	98796236	98796223	98796253
	450	48	98796180	98796181	98796184	98796185	98796236	98796223	98796253
250 -	350	48	98796180	98796181	98796184	98796185	98796236	98796223	98796253
	400	48	98796180	98796181	98796184	98796185	98796236	98796223	98796253
	450	60	98796188	98796189	98796192	98796193	98796239	98796226	98796255
	500	60	98796188	98796189	98796192	98796193	98796239	98796226	98796255

Pump type		Material code	I, J, K, M, N, P, U, W						
		Pump shaft diameter d5	Stuffing box for 1.4408 pump				Shaft sleeve		Gland
			SNEA, SNEC, SNFA, SNFC	SNEB, SNED, SNFB, SNFD	SNOA, SNOC	SNOB, SNOD	E (EPDM)	V (FKM)	
32 -	125.1	24	98796196	98796197	96877099	96877101	98796242	98796229	98796247
	160.1	24	98796196	98796197	96877099	96877101	98796242	98796229	98796247
	200.1	24	98796196	98796197	96877099	96877101	98796242	98796229	98796247
	125	24	98796196	98796197	96877099	96877101	98796242	98796229	98796247
	160	24	98796196	98796197	96877099	96877101	98796242	98796229	98796247
	200	24	98796196	98796197	96877099	96877101	98796242	98796229	98796247
	250	24	98796196	98796197	96877099	96877101	98796242	98796229	98796247
40 -	125	24	98796196	98796197	96877099	96877101	98796242	98796229	98796247
	160	24	98796196	98796197	96877099	96877101	98796242	98796229	98796247
	200	24	98796196	98796197	96877099	96877101	98796242	98796229	98796247
	250	24	98796196	98796197	96877099	96877101	98796242	98796229	98796247
	315	32	98796200	98796201	96877127	96877129	98796244	98796231	98796249
50 -	125	24	98796196	98796197	96877099	96877101	98796242	98796229	98796247
	160	24	98796196	98796197	96877099	96877101	98796242	98796229	98796247
	200	24	98796196	98796197	96877099	96877101	98796242	98796229	98796247
	250	24	98796196	98796197	96877099	96877101	98796242	98796229	98796247
	315	32	98796200	98796201	96877127	96877129	98796244	98796231	98796249
65 -	125	24	98796196	98796197	96877099	96877101	98796242	98796229	98796247
	160	24	98796196	98796197	96877099	96877101	98796242	98796229	98796247
	200	24	98796196	98796197	96877099	96877101	98796242	98796229	98796247
	250	32	98796200	98796201	96877127	96877129	98796244	98796231	98796249
	315	32	98796200	98796201	96877127	96877129	98796244	98796231	98796249
80 -	160	24	98796196	98796197	96877099	96877101	98796242	98796229	98796247
	200	32	98796200	98796201	96877127	96877129	98796244	98796231	98796249
	250	32	98796200	98796201	96877127	96877129	98796244	98796231	98796249
	315	32	98796200	98796201	96877127	96877129	98796244	98796231	98796249
	400	42	98796204	98796205	98796176	98796177	98796234	98796221	98796251
100 -	160	24	98796196	98796197	96877099	96877101	98796242	98796229	98796247
	200	32	98796200	98796201	96877127	96877129	98796244	98796231	98796249
	250	32	98796200	98796201	96877127	96877129	98796244	98796231	98796249
	315	32	98796200	98796201	96877127	96877129	98796244	98796231	98796249
	400	42	98796204	98796205	98796176	98796177	98796234	98796221	98796251

Pump type		Material code	I, J, K, M, N, P, U, W						
		Pump shaft diameter d5	Stuffing box for 1.4408 pump				Shaft sleeve		Gland
			SNEA, SNEC, SNFA, SNFC	SNEB, SNED, SNFB, SNFD	SNOA, SNOC	SNOB, SNOD	E (EPDM)	V (FKM)	
125 -	200	32	98796200	98796201	96877127	96877129	98796244	98796231	98796249
	250	32	98796200	98796201	96877127	96877129	98796244	98796231	98796249
	315	42	98796204	98796205	98796176	98796177	98796234	98796221	98796251
	400	42	98796204	98796205	98796176	98796177	98796234	98796221	98796251
	500	60	98796212	98796213	98796192	98796193	98796240	98796227	98796255
150 -	200	32	98796200	98796201	96877127	96877129	98796244	98796231	98796249
	250	42	98796204	98796205	98796176	98796177	98796234	98796221	98796251
	315.1	42	98796204	98796205	98796176	98796177	98796234	98796221	98796251
	315.2	42	98796204	98796205	98796176	98796177	98796234	98796221	98796251
	315	42	98796204	98796205	98796176	98796177	98796234	98796221	98796251
	400	42	98796204	98796205	98796176	98796177	98796234	98796221	98796251
	500	60	98796212	98796213	98796192	98796193	98796240	98796227	98796255
200 -	400	48	98796208	98796209	98796184	98796185	98796237	98796224	98796253
	450	48	98796208	98796209	98796184	98796185	98796237	98796224	98796253
250 -	350	48	98796208	98796209	98796184	98796185	98796237	98796224	98796253
	400	48	98796208	98796209	98796184	98796185	98796237	98796224	98796253
	450	60	98796212	98796213	98796192	98796193	98796240	98796227	98796255
	500	60	98796212	98796213	98796192	98796193	98796240	98796227	98796255

Pump type		Material code	L, R						
		Pump shaft diameter d5	Stuffing box for 1.4517 pump				Shaft sleeve		Gland
			SNEA, SNEC, SNFA, SNFC	SNEB, SNED, SNFB, SNFD	SNOA, SNOC	SNOB, SNOD	E (EPDM)	V (FKM)	
32 -	125.1	24	98796196	98796197	96877099	96877101	98796243	98796230	98796248
	160.1	24	98796196	98796197	96877099	96877101	98796243	98796230	98796248
	200.1	24	98796196	98796197	96877099	96877101	98796243	98796230	98796248
	125	24	98796196	98796197	96877099	96877101	98796243	98796230	98796248
	160	24	98796196	98796197	96877099	96877101	98796243	98796230	98796248
	200	24	98796196	98796197	96877099	96877101	98796243	98796230	98796248
	250	24	98796196	98796197	96877099	96877101	98796243	98796230	98796248
40 -	125	24	98796196	98796197	96877099	96877101	98796243	98796230	98796248
	160	24	98796196	98796197	96877099	96877101	98796243	98796230	98796248
	200	24	98796196	98796197	96877099	96877101	98796243	98796230	98796248
	250	24	98796196	98796197	96877099	96877101	98796243	98796230	98796248
	315	32	98796200	98796201	96877127	96877129	98796232	98796159	98796250
50 -	125	24	98796196	98796197	96877099	96877101	98796243	98796230	98796248
	160	24	98796196	98796197	96877099	96877101	98796243	98796230	98796248
	200	24	98796196	98796197	96877099	96877101	98796243	98796230	98796248
	250	24	98796196	98796197	96877099	96877101	98796243	98796230	98796248
	315	32	98796200	98796201	96877127	96877129	98796232	98796159	98796250
65 -	125	24	98796196	98796197	96877099	96877101	98796243	98796230	98796248
	160	24	98796196	98796197	96877099	96877101	98796243	98796230	98796248
	200	24	98796196	98796197	96877099	96877101	98796243	98796230	98796248
	250	32	98796200	98796201	96877127	96877129	98796232	98796159	98796250
	315	32	98796200	98796201	96877127	96877129	98796232	98796159	98796250
80 -	160	24	98796196	98796197	96877099	96877101	98796243	98796230	98796248
	200	32	98796200	98796201	96877127	96877129	98796232	98796159	98796250
	250	32	98796200	98796201	96877127	96877129	98796232	98796159	98796250
	315	32	98796200	98796201	96877127	96877129	98796232	98796159	98796250
	400	42	98796204	98796205	98796176	98796177	98796235	98796222	98796252

Pump type		Material code	L, R						
		Pump shaft diameter d5	Stuffing box for 1.4517 pump				Shaft sleeve		Gland
			SNEA, SNEC, SNFA, SNFC	SNEB, SNED, SNFB, SNFD	SNOA, SNOC	SNOB, SNOD	E (EPDM)	V (FKM)	
100 -	160	24	98796196	98796197	96877099	96877101	98796243	98796230	98796248
	200	32	98796200	98796201	96877127	96877129	98796232	98796159	98796250
	250	32	98796200	98796201	96877127	96877129	98796232	98796159	98796250
	315	32	98796200	98796201	96877127	96877129	98796232	98796159	98796250
	400	42	98796204	98796205	98796176	98796177	98796235	98796222	98796252
125 -	200	32	98796200	98796201	96877127	96877129	98796232	98796159	98796250
	250	32	98796200	98796201	96877127	96877129	98796232	98796159	98796250
	315	42	98796204	98796205	98796176	98796177	98796235	98796222	98796252
	400	42	98796204	98796205	98796176	98796177	98796235	98796222	98796252
	500	60	98796212	98796213	98796192	98796193	98796241	98796228	98796256
150 -	200	32	98796200	98796201	96877127	96877129	98796232	98796159	98796250
	250	42	98796204	98796205	98796176	98796177	98796235	98796222	98796252
	315.1	42	98796204	98796205	98796176	98796177	98796235	98796222	98796252
	315.2	42	98796204	98796205	98796176	98796177	98796235	98796222	98796252
	315	42	98796204	98796205	98796176	98796177	98796235	98796222	98796252
	400	42	98796204	98796205	98796176	98796177	98796235	98796222	98796252
	500	60	98796212	98796213	98796192	98796193	98796241	98796228	98796256
200 -	400	48	98796208	98796209	98796184	98796185	98796238	98796225	98796254
	450	48	98796208	98796209	98796184	98796185	98796238	98796225	98796254
250 -	350	48	98796208	98796209	98796184	98796185	98796238	98796225	98796254
	400	48	98796208	98796209	98796184	98796185	98796238	98796225	98796254
	450	60	98796212	98796213	98796192	98796193	98796241	98796228	98796256
	500	60	98796212	98796213	98796192	98796193	98796241	98796228	98796256

Stuffing box, shaft guard and pipe

Shaft guard

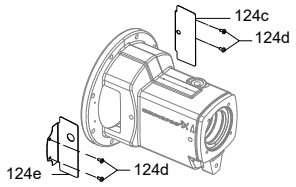

Kit, shaft guard

124c: 1 x shaft guard, left
124d: 4 x pan head screw
124e: 1 x shaft guard, right

Pipe SNE

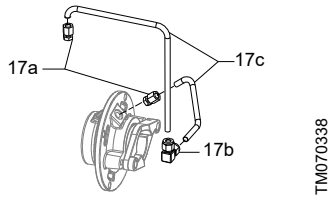

Kit, pipe SNE

17a: 2 x male connector, R1/8" - 8 mm
17b: 1 x union elbow, 8 mm - 8 mm
17c: 2 x pipe

Pipe SNF

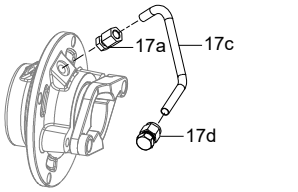

Kit, pipe SNF

17a: 1 x male connector, R1/8" - 8 mm
17c: 1 x pipe
17d: 1 x compression fitting, cap, 8 mm

Pump type		Pump shaft diameter d5	Kit, shaft guard							Kit, pipe	
				Stuffing box shaft seal							
			Single shaft seal	Cast iron pump housing			Stainless steel (1.4408, 1.4517) pump housing			Cast iron, stainless steel (1.4408) pump housing	
				SNO	SNE	SNF	SNO	SNE	SNF	SNE	SNF
32-	125.1	24	96809954	96809955	96809955	99089314	96809955	99089314	99089314		
	125	24	96809954	96809955	96809955	99089314	96809955	99089314	99089314		
	160.1	24	96809954	96809955	96809955	99089314	96809955	99089314	99089314		
	160	24	96809954	96809955	96809955	99089314	96809955	99089314	99089314		
	200.1	24	96809954	96809955	96809955	99089314	96809955	99089314	99089314		
	200	24	96809954	96809955	96809955	99089314	96809955	99089314	99089314		
	250	24	96809954	96809955	96809955	99089314	96809955	99089314	99089314		
40-	125	24	96809954	96809955	96809955	99089314	96809955	99089314	99089314		
	160	24	96809954	96809955	96809955	99089314	96809955	99089314	99089314		
	200	24	96809954	96809955	96809955	99089314	96809955	99089314	99089314		
	250	24	96809954	96809955	96809955	99089314	96809955	99089314	99089314		
	315	32	96809957	96809958	96809958	99089318	96809958	99089318	99089318		
50-	125	24	96809954	96809955	96809955	99089314	96809955	99089314	99089314		
	160	24	96809954	96809955	96809955	99089314	96809955	99089314	99089314		
	200	24	96809954	96809955	96809955	99089314	96809955	99089314	99089314		
	250	24	96809954	96809955	96809955	99089314	96809955	99089314	99089314		
	315	32	96809957	96809958	96809958	99089318	96809958	99089318	99089318		
65-	125	24	96809954	96809955	96809955	99089314	96809955	99089314	99089314	99001051	99001056
	160	24	96809954	96809955	96809955	99089314	96809955	99089314	99089314		
	200	24	96809954	96809955	96809955	99089314	96809955	99089314	99089314		
	250	32	96809957	96809958	96809958	99089318	96809958	99089318	99089318		
	315	32	96809957	96809958	96809958	99089318	96809958	99089318	99089318		
80-	160	24	96809954	96809955	96809955	99089314	96809955	99089314	99089314		
	200	32	96809957	96809958	96809958	99089318	96809958	99089318	99089318		
	250	32	96809957	96809958	96809958	99089318	96809958	99089318	99089318		
	315	32	96809957	96809958	96809958	99089318	96809958	99089318	99089318		
	315 [1)]	42	96809961	96809961	96809961	99089323	96809961	99089323	99089323		
	400	42	96809961	96809961	96809961	99089323	96809961	99089323	99089323		
100-	160	24	96809954	96809955	96809955	99089314	96809955	99089314	99089314		
	200	32	96809957	96809958	96809958	99089318	96809958	99089318	99089318		
	250	32	96809957	96809958	96809958	99089318	96809958	99089318	99089318		
	315	32	96809957	96809958	96809958	99089318	96809958	99089318	99089318		
	315 [1)]	42	96809961	96809961	96809961	99089323	96809961	99089323	99089323		
	400	42	96809961	96809961	96809961	99089323	96809961	99089323	99089323		

Pump type		Pump shaft diameter d5	Kit, shaft guard							Kit, pipe	
			Single shaft seal	Stuffing box shaft seal							
				Cast iron pump housing			Stainless steel (1.4408, 1.4517) pump housing			Cast iron, stainless steel (1.4408) pump housing	
				SNO	SNE	SNF	SNO	SNE	SNF	SNE	SNF
125-	200	32	96809957	96809958	96809958	99089318	96809958	99089318	99089318		
	250	32	96809957	96809958	96809958	99089318	96809958	99089318	99089318		
	250 [1]	42	96809961	96809961	96809961	99089323	96809961	99089323	99089323		
	315	42	96809961	96809961	96809961	99089323	96809961	99089323	99089323		
	400	42	96809961	96809961	96809961	99089323	96809961	99089323	99089323		
	500	60	96809962	96809962	99089326	99089326	96809962	99089326	99089326		
150-	200	32	96809957	96809958	96809958	99089318	96809958	99089318	99089318		
	250	42	96809961	96809961	96809961	99089323	96809961	99089323	99089323		
	315.1	42	96809961	96809961	96809961	99089323	96809961	99089323	99089323		
	315.2	42	96809961	96809961	96809961	99089323	96809961	99089323	99089323		
	315	42	96809961	96809961	96809961	99089323	96809961	99089323	99089323		
	400	42	96809961	96809961	96809961	99089323	96809961	99089323	99089323		
	400 [1]	48	96809962	96809962	99089326	99089326	96809962	99089326	99089326		
	500	60	96809962	96809962	99089326	99089326	96809962	99089326	99089326		
200-	400	48	96809962	96809962	99089325	99089325	96809962	99089325	99089325		
	450	48	96809962	96809962	99089325	99089325	96809962	99089325	99089325		
250-	350	48	96809962	96809962	99089325	99089325	96809962	99089325	99089325		
	400	48	96809962	96809962	99089325	99089325	96809962	99089325	99089325		
	450	60	96809962	96809962	99089325	99089325	96809962	99089325	99089325		
	500	60	96809962	96809962	99089325	99089325	96809962	99089325	99089325		

1) Oversize pump.

Shaft, bearings, spacer ring and V-ring

Shaft, standard

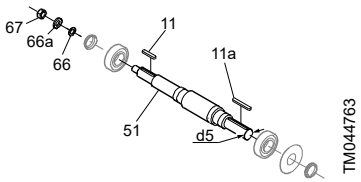

Content of shaft kit (mechanical shaft seal)

11:1 x key
11a:1 x key
51:1 x shaft
66:1 x washer
66a:1 x lock washer
67:1 x nut

Shaft, stuffing box

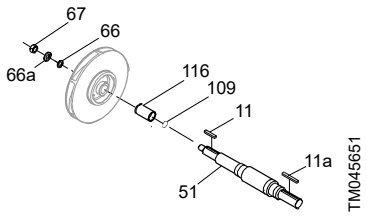

Content of shaft kit (stuffing box)

11:1 x key
11a:1 x key
51:1 x shaft
66:1 x washer
66a:1 x lock washer
67:1 x nut
109:1 x O-ring
116:1 x shaft sleeve

Bearings

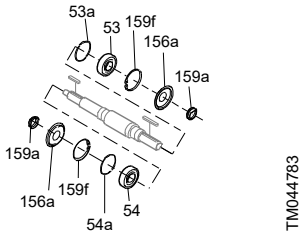

Content of bearing kit

53/54:2 x bearing
53a/54a:2 x O-ring
156a:2 x bearing cover
159f:2 x retaining ring
159a:2 x V-ring

Spacer ring

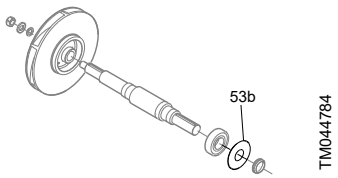

Content of spacer ring kit

53b:1 x spacer ring

V-ring

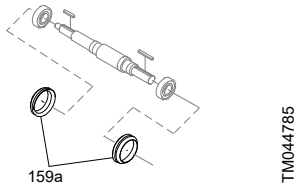

Content of V-ring kit

159a:2 x V-ring

The material code can be found in the type designation on the nameplate.

NK 32 125 .1 A1 F 1(A)E S BAQE

Pump type		Pump shaft dia. d5	Shaft for mechanical shaft seal			Shaft for stuffing box code B					
			Material code	A, B, C, D, E, F, G, H, K, M, N, P, S	I, J, L, R, T, U, W	A, B, E, F		C, D, G, H, K, M, N, P, S		I, J, L, R, T, U, W	
				1.4401 + 1.0569 - 1.4408	1.4462	Rubber					
						V	E	V	E	V	E
	125.1	24		96039654	96861516	98812951	96579594	98812952	98812959	98835255	98835257
	160.1	24		96039654	96861516	98812951	96579594	98812952	98812959	98835255	98835257
	200.1	24		96039654	96861516	98812951	96579594	98812952	98812959	98835255	98835257
32-	125	24		96039654	96861516	98812951	96579594	98812952	98812959	98835255	98835257
	160	24		96039654	96861516	98812951	96579594	98812952	98812959	98835255	98835257
	200	24		96039654	96861516	98812951	96579594	98812952	98812959	98835255	98835257
	250	24		96039654	96861516	98812951	96579594	98812952	98812959	98835255	98835257
	125	24		96039654	96861516	98812951	96579594	98812952	98812959	98835255	98835257
	160	24		96039654	96861516	98812951	96579594	98812952	98812959	98835255	98835257
40-	200	24		96039654	96861516	98812951	96579594	98812952	98812959	98835255	98835257
	250	24		96039654	96861516	98812951	96579594	98812952	98812959	98835255	98835257
	315	32		96039655	96861519	98812955	96579593	98812956	98812961	98835256	98835258
	125	24		96039654	96861516	98812951	96579594	98812952	98812959	98835255	98835257
	160	24		96039654	96861516	98812951	96579594	98812952	98812959	98835255	98835257
50-	200	24		96039654	96861516	98812951	96579594	98812952	98812959	98835255	98835257
	250	24		96039654	96861516	98812951	96579594	98812952	98812959	98835255	98835257
	315	32		96039655	96861519	98812955	96579593	98812956	98812961	98835256	98835258
	125	24		96039654	96861516	98812951	96579594	98812952	98812959	98835255	98835257
	160	24		96039654	96861516	98812951	96579594	98812952	98812959	98835255	98835257
65-	200	24		96039654	96861516	98812951	96579594	98812952	98812959	98835255	98835257
	250	32		96039655	96861519	98812955	96579593	98812956	98812961	98835256	98835258
	315	32		96039655	96861519	98812955	96579593	98812956	98812961	98835256	98835258
	160	24		96039654	96861516	98812951	96579594	98812952	98812959	98835255	98835257
	200	32		96039655	96861519	98812955	96579593	98812956	98812961	98835256	98835258
	250	32		96039655	96861519	98812955	96579593	98812956	98812961	98835256	98835258
80-	315	32		96039655	96861519	98812955	96579593	98812956	98812961	98835256	98835258
	315 [1)]	42		96861524	96861525	98795676	98795700	98795677	98795701	98795678	98795702
	400	42		96861522	96861523	98795676	98795700	98795677	98795701	98795678	98795702
	160	24		96039654	96861516	98812951	96579594	98812952	98812959	98835255	98835257
	200	32		96039655	96861519	98812955	96579593	98812956	98812961	98835256	98835258
	250	32		96039655	96861519	98812955	96579593	98812956	98812961	98835256	98835258
100-	250 [1)]	42		96861524	96861525	98795676	98795700	98795677	98795701	98795678	98795702
	315	32		96039655	96861519	98812955	96579593	98812956	98812961	98835256	98835258
	315*	42		96861524	96861525	98795676	98795700	98795677	98795701	98795678	98795702
	400	42		96861522	96861523	98795676	98795700	98795677	98795701	98795678	98795702
	200	32		96039655	96861519	98812955	96579593	98812956	98812961	98835256	98835258
	250	32		96039655	96861519	98812955	96579593	98812956	98812961	98835256	98835258
125-	250 [1)]	42		96861524	96861525	98795676	98795700	98795677	98795701	98795678	98795702
	315	42		96861522	96861523	98795676	98795700	98795677	98795701	98795678	98795702
	400	42		96861522	96861523	98795676	98795700	98795677	98795701	98795678	98795702
	500	60		96861528	96861529	98795685	98795709	98795686	98795710	98795687	98795711

Pump type		Pump shaft dia. d5	Shaft for mechanical shaft seal		Shaft for stuffing box code B					
			Material code	A, B, C, D, E, F, G, H, K, M, N, P, S	I, J, L, R, T, U, W	A, B, E, F		C, D, G, H, K, M, N, P, S		I, J, L, R, T, U, W	
				1.4401 + 1.0569 - 1.4408	1.4462	Rubber					
						V	E	V	E	V	E
150-	200	32		96039655	96861519	98812955	96579593	98812956	98812961	98835256	98835258
	250	42		96861522	96861523	98795676	98795700	98795677	98795701	98795678	98795702
	315.1	42		96861522	96861523	98795676	98795700	98795677	98795701	98795678	98795702
	315.2	42		96861522	96861523	98795676	98795700	98795677	98795701	98795678	98795702
	315	42		96861522	96861523	98795676	98795700	98795677	98795701	98795678	98795702
	400	42		96861522	96861523	98795676	98795700	98795677	98795701	98795678	98795702
	400 [1]	48		96861526	96861527	98795682	98795706	98795683	98795707	98795684	98795708
	500	60		96861528	96861529	98795685	98795709	98795686	98795710	98795687	98795711
200-	400	48		96861526	96861527	98795682	98795706	98795683	98795707	98795684	98795708
	450	48		96861526	96861527	98795682	98795706	98795683	98795707	98795684	98795708
250-	350	48		96861526	96861527	98795682	98795706	98795683	98795707	98795684	98795708
	400	48		96861526	96861527	98795682	98795706	98795683	98795707	98795684	98795708
	450	60		96861528	96861529	98795685	98795709	98795686	98795710	98795687	98795711
	500	60		96861528	96861529	98795685	98795709	98795686	98795710	98795687	98795711

1) Oversize pump.

Pump type		Pump shaft diameter d5	Bearings		Spacer ring	V-ring	
			Standard	PWIS-free		Standard	PWIS-free
32-	125.1	24	96579598	98670820	96938908	96871237	98670823
	160.1	24	96579598	98670820	96938908	96871237	98670823
	200.1	24	96579598	98670820	96938908	96871237	98670823
	125	24	96579598	98670820	96938908	96871237	98670823
	160	24	96579598	98670820	96938908	96871237	98670823
	200	24	96579598	98670820	96938908	96871237	98670823
	250	24	96579598	98670820	96938908	96871237	98670823
40-	125	24	96579598	98670820	96938908	96871237	98670823
	160	24	96579598	98670820	96938908	96871237	98670823
	200	24	96579598	98670820	96938908	96871237	98670823
	250	24	96579598	98670820	96938908	96871237	98670823
	315	32	96579599	98670821	96938909	96591314	98670822
50-	125	24	96579598	98670820	96938908	96871237	98670823
	160	24	96579598	98670820	96938908	96871237	98670823
	200	24	96579598	98670820	96938908	96871237	98670823
	250	24	96579598	98670820	96938908	96871237	98670823
	315	32	96579599	98670821	96938909	96591314	98670822
65-	125	24	96579598	98670820	96938908	96871237	98670823
	160	24	96579598	98670820	96938908	96871237	98670823
	200	24	96579598	98670820	96938908	96871237	98670823
	250	32	96579599	98670821	96938909	96591314	98670822
	315	32	96579599	98670821	96938909	96591314	98670822
80-	160	24	96579598	98670820	96938908	96871237	98670823
	200	32	96579599	98670821	96938909	96591314	98670822
	250	32	96579599	98670821	96938909	96591314	98670822
	315	32	96579599	98670821	96938909	96591314	98670822
	315 [1] [1]	42	95919875	98670816	96938911	96871240	98670826
	400	42	95919874	98670815	96938910	96871239	98670825

Pump type		Pump shaft diameter d5	Bearings		Spacer ring	V-ring	
			Standard	PWIS-free		Standard	PWIS-free
100-	160	24	96579598	98670820	96938908	96871237	98670823
	200	32	96579599	98670821	96938909	96591314	98670822
	250	32	96579599	98670821	96938909	96591314	98670822
	250 [1)]	42	95919875	98670816	96938911	96871240	98670826
	315	32	96579599	98670821	96938909	96591314	98670822
	315 [1)]	42	95919875	98670816	96938911	96871240	98670826
	400	42	95919874	98670815	96938910	96871239	98670825
125-	200	32	96579599	98670821	96938909	96591314	98670822
	250	32	96579599	98670821	96938909	96591314	98670822
	250 [1)]	42	95919875	98670816	96938911	96871240	98670826
	315	42	95919874	98670815	96938910	96871239	98670825
	400	42	95919874	98670815	96938910	96871239	98670825
	500	60	95919877	98670818	96938911	96871242	98670828
150-	200	32	96579599	98670821	96938909	96591314	98670822
	250	42	95919874	98670815	96938910	96871239	98670825
	315.1	42	95919874	98670815	96938910	96871239	98670825
	315.2	42	95919874	98670815	96938910	96871239	98670825
	315	42	95919874	98670815	96938910	96871239	98670825
	400	42	95919874	98670815	96938910	96871239	98670825
	400 [1)]	48	95919876	98670817	96938911	96871241	98670827
	500	60	95919877	98670818	96938911	96871242	98670828
200-	400	48	95919876	98670817	96938911	96871241	98670827
	450	48	95919876	98670817	96938911	96871241	98670827
250-	350	48	95919876	98670817	96938911	96871241	98670827
	400	48	95919876	98670817	96938911	96871241	98670827
	450	60	95919877	98670818	96938911	96871242	98670828
	500	60	95919877	98670818	96938911	96871242	98670828

1) Oversize pump

Wear ring

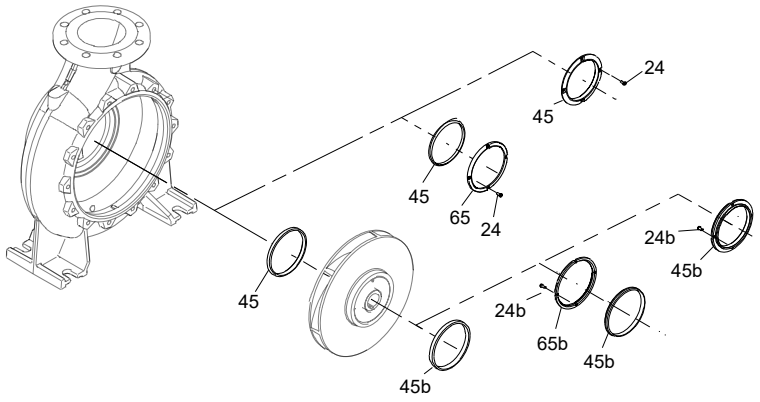

TM044731

Material code: A, B, C, D, E, F, G, H, S, T	
Pos. 45	**Pos. 45b**
45: 1 x wear ring	45b: 1 x wear ring

Material code: J, N, P, R, W	
Pos. 45	**Pos. 45b**
45: 1 x wear ring	45b: 1 x wear ring
65: 1 x wear ring retainer	65b: 1 x wear ring retainer
24: 4 x screw	24b: 4 x screw

Material code: I, K, L, M, U	
Pos. 45	**Pos. 45b**
45: 1 x wear ring	45b: 1 x wear ring
24: 4 x screw	24b: 4 x screw

Material code A, B, C, D, E, F, G, H, S, T (pump housing material cast iron)

The material code can be found in the type designation on the nameplate.

NK 32 -125 .1 /142 A1 -F-(A)-BAQE

Pump type		Wear ring inner diameter [mm]		Wear ring material			
				Bronze/brass		GG	
				A, B, C, D, E, F, G, H, S, T		A, B, C, D, E, F, G, H, S, T	
		Pos. 45	Pos. 45b	Pos. 45	Pos. 45b	Pos. 45	Pos. 45b
32-	125.1			96810099	-	-	-
	160.1			96810098	-	-	-
	200.1			96810098	-	-	-
	125			96810099	-	-	-
	160			96810099	96810102	-	-
	200			96810099	96810102	-	-
	250			96810099	96810103	-	-
40-	125			96810100	96810102	-	-
	160			96810100	96810102	-	-
	200			96810100	96810102	-	-
	250			96810100	96810103	-	-
	315			96810102	96797628	-	-
50-	125			96810102	96810102	-	-
	160			96810102	96810102	-	-
	200			96810102	96810102	-	-
	250			96810102	96810103	-	-
	315			96810103	96797628	-	-
65-	125			96810103	96810102	-	-
	160			96810103	96810104	-	-
	200			96810104	96810104	-	-
	250			96810104	96797628	-	-
	315			96810104	96797628	-	-
80-	160			96810106	96810104	-	-
	200			96810106	96797628	-	-
	250			96810106	96797628	-	-
	315			96810106	96797628	-	-
	400			96797628	96810109	-	-

Pump type		Wear ring inner diameter [mm]		Wear ring material			
				Bronze/brass		GG	
				A, B, C, D, E, F, G, H, S, T		A, B, C, D, E, F, G, H, S, T	
		Pos. 45	Pos. 45b	Pos. 45	Pos. 45b	Pos. 45	Pos. 45b
100-	160			96810107	96810104	-	-
	200	174	154	96810108	96797628	-	-
	200	154	154	96797628	96797628	-	-
	250			96797628	96797628	-	-
	315			96797628	96797628	-	-
	400			96810109	96810109	-	-
125-	200			96810108	96797628	-	-
	250			96810109	96810109	-	-
	315			96810109	96797628	-	-
	400			96810109	96810109	-	-
	500			96810109	96810112	-	-
150-	200			96810110	96810109	-	-
	250	210	185	96810111	96810109	-	-
	250	185	185	96810109	96810109	-	-
	315.1			96810111	96810112	-	-
	315.2			96810111	96810112	-	-
	315			96810111	96810112	-	-
	400			96810112	96810112	-	-
	500			96810112	96810112	-	-
200-	400			96939611	96939611	96939606	96939609
	450			96939612	96939612	96939607	96939607
250-	350			96939613	96939615	96939608	96939607
	400			96939615	96939615	96939607	96939607
	450			96939614	96939614	96939607	96939607
	500			96939615	96939615	96939610	96939610

Note: Oversize pumps use the same wear ring as standard pumps.

Material code I, J, K, L, M, N, P, R, U, W (pump housing materials 1.4517 or 1.4408)

Pump type		Wear ring inner diameter [mm]		Material code	J, N, P, R, W				I, K, L, M, U			
				ACS approval	-		-		-		Yes	
				Wear ring	Carbon-graphite-filled PTFE		Carbon-graphite-filled PTFE		1.4517		1.4517	
				Screw	1.4539		1.4401		1.4539		1.4401	
		Pos. 45	Pos. 45b		Pos. 45	Pos. 45b	Pos. 45	Pos. 45b	Pos. 45	Pos. 45b	Pos. 45	Pos. 45b
	125.1				96810113	96774200	96810114	96810117	96810134	96810138	96810135	96810139
	160.1				97939262	96774200	97939263	96810117	97939264	96810138	97939265	96810139
	200.1				97939262	96774200	97939263	96810117	97939264	96810138	97939265	96810139
32-	125				96810113	96774200	96810114	96810117	96810134	96810138	96810135	96810139
	160				96810113	96774200	96810114	96810117	96810134	96810138	96810135	96810139
	200				96810113	96774200	96810114	96810117	96810134	96810138	96810135	96810139
	250				96810113	96810120	96810114	96810121	96810134	96810142	96810135	96810143
	125				96810115	96774200	96810116	96810117	96810136	96810138	96810137	96810139
	160				96810115	96774200	96810116	96810117	96810136	96810138	96810137	96810139
40-	200				96810115	96774200	96810116	96810117	96810136	96810138	96810137	96810139
	250				96810115	96810120	96810116	96810121	96810136	96810142	96810137	96810143
	315				96774200	96810130	96810117	96810131	96810138	96810152	96810139	96810153
	125				96774200	96774200	96810117	96810117	96810138	96810138	96810139	96810139
	160				96774200	96774200	96810117	96810117	96810138	96810138	96810139	96810139
50-	200				96774200	96774200	96810117	96810117	96810138	96810138	96810139	96810139
	250				96774200	96810120	96810117	96810121	96810138	96810142	96810139	96810143
	315				96810120	96810130	96810121	96810131	96810142	96810152	96810143	96810153
	125				96810120	96774200	96810121	96810117	96810142	96810138	96810143	96810139
	160				96810120	96810124	96810121	96810125	96810142	96810146	96810143	96810147
65-	200				96810124	96810124	96810125	96810125	96810146	96810146	96810147	96810147
	250				96810124	96810130	96810125	96810131	96810146	96810152	96810147	96810153
	315				96810124	96810130	96810125	96810131	96810146	96810152	96810147	96810153
	160				96810128	96810124	96810129	96810125	96810150	96810146	96810151	96810147
	200				96810128	96810130	96810129	96810131	96810150	96810152	96810151	96810153
	250				96810128	96810130	96810129	96810131	96810150	96810152	96810151	96810153
80-	315				96810128	96810130	96810129	96810131	96810150	96810152	96810151	96810153
	315 [1)]				96810128	96810130	96810129	96810131	96810150	96810152	96810151	96810153
	400				96810130	96810132	96810131	96810133	96810152	96810154	96810153	96810155
	160				96810118	96810124	96810119	96810125	96810148	96810146	96810149	96810147
	200				96810130	96810130	96810131	96810131	96810152	96810152	96810153	96810153
	250				96810130	96810130	96810131	96810131	96810152	96810152	96810153	96810153
100-	250 [1)]				96810130	96810130	96810131	96810131	96810152	96810152	96810153	96810153
	315				96810130	96810130	96810131	96810131	96810152	96810152	96810153	96810153
	315 [1)]				96810130	96810130	96810131	96810131	96810152	96810152	96810153	96810153
	400				96810132	96810132	96810133	96810133	96810154	96810154	96810155	96810155
	200	174	154		97939252	96810130	97939253	96810131	97939254	96810152	97939255	96810153
	200	154	154		96810130	96810130	96810131	96810131	96810152	96810152	96810153	96810153
	250				96810132	96810132	96810133	96810133	96810154	96810154	96810155	96810155
125-	250 [1)]				96810132	96810132	96810133	96810133	96810154	96810154	96810155	96810155
	315				96810132	96810130	96810133	96810131	96810154	96810152	96810155	96810153
	400				96810132	96810132	96810133	96810133	96810154	96810154	96810155	96810155
	500				96810132	96810132	96810133	96810133	96810154	96810154	96810155	96810155

Pump type		Wear ring inner diameter [mm]		Material code	J, N, P, R, W				I, K, L, M, U			
				ACS approval	-		-		-		Yes	
				Wear ring	Carbon-graphite-filled PTFE		Carbon-graphite-filled PTFE		1.4517		1.4517	
				Screw	1.4539		1.4401		1.4539		1.4401	
		Pos. 45	Pos. 45b		Pos. 45	Pos. 45b	Pos. 45	Pos. 45b	Pos. 45	Pos. 45b	Pos. 45	Pos. 45b
150-	200				*97939256*	*96810132*	*97939257*	*96810133*	*97939258*	*96810154*	*97939259*	*96810155*
	250	210	185		*96887266*	*96810132*	*96887264*	*96810133*	*96887262*	*96810154*	*96887255*	*96810155*
	250	185	185		*96810132*	*96810132*	*96810133*	*96810133*	*96810154*	*96810154*	*96810155*	*96810155*
	315.1				*97739720*	*96887266*	*97739719*	*96887264*	*97739717*	*96887262*	*97739700*	*96887255*
	315.2				*97739720*	*96887266*	*97739719*	*96887264*	*97739717*	*96887262*	*97739700*	*96887255*
	315				*97739720*	*96887266*	*97739719*	*96887264*	*97739717*	*96887262*	*97739700*	*96887255*
	400				*97739720*	*97739720*	*97739719*	*97739719*	*97739717*	*97739717*	*97739700*	*97739700*
	400 [1)]				*97739720*	*97739720*	*97739719*	*97739719*	*97739717*	*97739717*	*97739700*	*97739700*
	500				*97739720*	*97739720*	*97739719*	*97739719*	*97739717*	*97739717*	*97739700*	*97739700*
200-	400				-	-	-	-	-	-	-	-
	450				-	-	-	-	-	-	-	-
250-	350				-	-	-	-	-	-	-	-
	400				-	-	-	-	-	-	-	-
	450				-	-	-	-	-	-	-	-
	500				-	-	-	-	-	-	-	-

1) Oversize pump.

Impeller

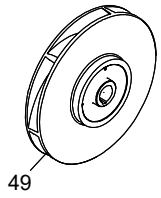

TM044729

Find the impeller in Grundfos Proudct Center, and contact your local sales company.

Nut, washer and key for impeller

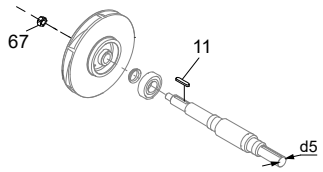

TM044782

Material code A, B, C, D, E, F, G, H, K, M, N, P, S	Material code I, J, L, R, T, U, W
11 1 x key	11:1 x key
67:1 x nut	67:1 x nut
66a:1 x lock washer	66a:1 x lock washer
66: 1 x washer	66:1 x washer

The material code can be found in the type designation on the nameplate.

NK 32 125 .1 A1 F 1(A)E S BAQE

TM1040603

Pump type		Pump shaft dia.	Material code	
		d5	A, B, C, D, E, F, G, H, K, M, N, P, S	I, J, L, R, T, U, W
32-	125.1	24	*96939128*	*96939129*
	160.1	24	*96939128*	*96939129*
	200.1	24	*96939128*	*96939129*
	125	24	*96939128*	*96939129*
	160	24	*96939128*	*96939129*
	200	24	*96939128*	*96939129*
	250	24	*96939128*	*96939129*
40-	125	24	*96939128*	*96939129*
	160	24	*96939128*	*96939129*
	200	24	*96939128*	*96939129*
	250	24	*96939128*	*96939129*
	315	32	*96939130*	*96939131*
50-	125	24	*96939128*	*96939129*
	160	24	*96939128*	*96939129*
	200	24	*96939128*	*96939129*
	250	24	*96939128*	*96939129*
	315	32	*96939130*	*96939131*
65-	125	24	*96939128*	*96939129*
	160	24	*96939128*	*96939129*
	200	24	*96939128*	*96939129*
	250	32	*96939130*	*96939131*
	315	32	*96939130*	*96939131*

Pump type		Pump shaft dia.	Material code	
		d5	A, B, C, D, E, F, G, H, K, M, N, P, S	I, J, L, R, T, U, W
80-	160	24	*96939128*	*96939129*
	200	32	*96939130*	*96939131*
	250	32	*96939130*	*96939131*
	315	32	*96939130*	*96939131*
	315 [1)]	42	*96939132*	*96939133*
	400	42	*96939132*	*96939133*
100-	160	24	*96939128*	*96939129*
	200	32	*96939130*	*96939131*
	250	32	*96939130*	*96939131*
	250 [1)]	42	*96939132*	*96939133*
	315	32	*96939130*	*96939131*
	315 [1)]	42	*96939132*	*96939133*
	400	42	*96939132*	*96939133*
125-	200	32	*96939130*	*96939131*
	250	32	*96939130*	*96939131*
	250 [1)]	42	*96939132*	*96939133*
	315	42	*96939132*	*96939133*
	400	42	*96939132*	*96939133*
	500	60	*96939137*	*96939138*

Pump type		Pump shaft dia.	Material code	
		d5	A, B, C, D, E, F, G, H, K, M, N, P, S	I, J, L, R, T, U, W
150-	200	32	*96939130*	*96939131*
	250	42	*96939132*	*96939133*
	315.1	42	*96939132*	*96939133*
	315.2	42	*96939132*	*96939133*
	315	42	*96939132*	*96939133*
	400	42	*96939132*	*96939133*
	400 [1)]	48	*96939134*	*96939135*
	500	60	*96939137*	*96939138*
200-	400	48	*96939134*	*96939135*
	450	48	*96939134*	*96939135*
250-	350	48	*96939134*	*96939135*
	400	48	*96939134*	*96939135*
	450	60	*96939137*	*96939138*
	500	60	*96939137*	*96939138*

1) Oversize pump.

Coupling

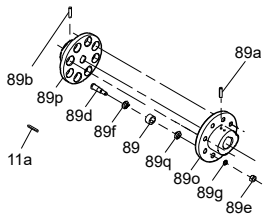

TM044767

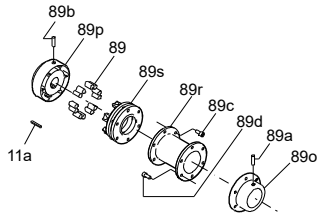

TM044769

Grundfos standard coupling		
Coupling complete	Rubber	Bolts
89o:1 x male part 89p:1 x female part 89d:1 set of bolts/rubber parts 89a:1 x hexagon screw 89b:1 x hexagon screw 11a:1 x key	89: 1 set of rubber parts	89d:1 set of bolts 89f:1 x washer 89q:1 x washer 89g:1 x lock washer 89e:1 x nut 89:1 set of rubber parts

Flender spacer coupling	
Coupling complete	Rubber
89a:1 x set screw 89b:1 x set screw 89:1 set of rubber parts 89o:1 x coupling part, male 89s:1 x spacer ring 89p:1 x coupling part, female 89r:1 x spacer sleeve 89c:1 set of hexagon screws 89d:1 set of hexagon screws 11a:1 x key	89: 1 set of rubber parts

Pump type	Motor data					Shaft dia.		Grundfos standard coupling				Flender spacer coupling			
	Pole	Power [kW]		Frame size	Make	Pump	Motor	Coupling diameter	Coupling complete	Rubber	Bolts	Coupling diameter	Spacer length	Coupling complete	Rubber
		50 Hz	60 Hz			[mm]	[mm]	[mm]				[mm]	[mm]		
32- 125	2	1.1	-	90S	All	24	24	125	96848894	96789247	96809939	80	100	96579720	96480015
	2	1.5	1.5	90S	All	24	24	125	96848894	96789247	96809939	80	100	96579720	96480015
	2	2.2	2.2	90L	All	24	24	125	96848894	96789247	96809939	80	100	96579720	96480015
	2	3	3	100L	All	24	28	140	96848895	96789247	96809940	80	100	96579722	96480015
	2	-	4	112M	All	24	28	140	96848895	96789247	96809940	80	100	96579722	96480015
	2	-	5.5	132S	All	24	38	160	96848896	96789247	96809941	95	100	96579726	96480016
	4	0.25	0.25	71A	All	24	14	125	96848892	96789247	96809939	80	100	96579717	96480015
	4	0.37	0.37	71B	All	24	14	125	96848892	96789247	96809939	80	100	96579717	96480015
	4	-	0.55	80A	All	24	19	125	96848893	96789247	96809939	80	100	96579719	96480015
	4	-	0.75	80B	All	24	19	125	96848893	96789247	96809939	80	100	96579719	96480015
32- 160	2	2.2	-	90L	All	24	24	125	96848894	96789247	96809939	80	100	96579720	96480015
	2	3	3	100L	All	24	28	140	96848895	96789247	96809940	80	100	96579722	96480015
	2	4	4	112M	All	24	28	140	96848895	96789247	96809940	80	100	96579722	96480015
	2	5.5	5.5	132S	All	24	38	160	96848896	96789247	96809941	95	100	96579726	96480016
	2	-	7.5	132S	All	24	38	160	96848896	96789247	96809941	95	100	96579726	96480016
	2	-	11	160M	All	24	42	180	96848897	96789247	96809941	95	100	96579731	96480016
	4	0.25	-	71A	All	24	14	125	96848892	96789247	96809939	80	100	96579717	96480015
	4	0.37	0.37	71B	All	24	14	125	96848892	96789247	96809939	80	100	96579717	96480015
	4	0.55	0.55	80A	All	24	19	125	96848893	96789247	96809939	80	100	96579719	96480015
	4	0.75	0.75	80B	All	24	19	125	96848893	96789247	96809939	80	100	96579719	96480015
	4	-	1.1	90S	All	24	24	125	96848894	96789247	96809939	80	100	96579720	96480015

Pump type	Motor data					Shaft dia.		Grundfos standard coupling				Flender spacer coupling			
	Pole	Power [kW]		Frame size	Make	Pump	Motor	Coupling diameter	Coupling complete	Rubber	Bolts	Coupling diameter	Spacer length	Coupling complete	Rubber
		50 Hz	60 Hz			[mm]	[mm]	[mm]				[mm]	[mm]		
32- 200	2	4	-	112M	All	24	28	140	96848895	96789247	96809940	80	100	96579722	96480015
	2	5.5	5.5	132S	All	24	38	160	96848896	96789247	96809941	95	100	96579726	96480016
	2	7.5	7.5	132S	All	24	38	160	96848896	96789247	96809941	95	100	96579726	96480016
	2	11	11	160M	All	24	42	180	96848897	96789247	96809941	95	100	96579731	96480016
	2	-	15	160M	All	24	42	180	96848897	96789247	96809941	95	100	96579731	96480016
	2	-	18.5	160L	All	24	42	180	96848897	96789247	96809941	95	100	96579731	96480016
	4	0.55	-	80A	All	24	19	125	96848893	96789247	96809939	80	100	96579719	96480015
	4	0.75	0.75	80B	All	24	19	125	96848893	96789247	96809939	80	100	96579719	96480015
	4	1.1	1.1	90S	All	24	24	125	96848894	96789247	96809939	80	100	96579720	96480015
	4	1.5	1.5	90L	All	24	24	125	96848894	96789247	96809939	80	100	96579720	96480015
	4	-	2.2	100L	All	24	28	140	96848895	96789247	96809940	80	100	96579722	96480015
32- 250	2	5.5	5.5	132S	All	24	38	160	96848896	96789247	96809941	95	100	96579726	96480016
	2	7.5	7.5	132S	All	24	38	160	96848896	96789247	96809941	95	100	96579726	96480016
	2	11	11	160M	All	24	42	180	96848897	96789247	96809941	95	100	96579731	96480016
	2	15	15	160M	All	24	42	180	96848897	96789247	96809941	95	100	96579731	96480016
	2	-	18.5	160L	All	24	42	180	96848897	96789247	96809941	95	100	96579731	96480016
	4	0.75	-	80B	All	24	19	125	96848893	96789247	96809939	80	100	96579719	96480015
	4	1.1	1.1	90S	All	24	24	125	96848894	96789247	96809939	80	100	96579720	96480015
	4	1.5	1.5	90L	All	24	24	125	96848894	96789247	96809939	80	100	96579720	96480015
	4	2.2	2.2	100L	All	24	28	140	96848895	96789247	96809940	80	100	96579722	96480015
32- 125.1	2	0.75	-	80A	All	24	19	125	96848893	96789247	96809939	80	100	96579719	96480015
	2	1.1	1.1	90S	All	24	24	125	96848894	96789247	96809939	80	100	96579720	96480015
	2	1.5	1.5	90S	All	24	24	125	96848894	96789247	96809939	80	100	96579720	96480015
	2	2.2	2.2	90L	All	24	24	125	96848894	96789247	96809939	80	100	96579720	96480015
	2	-	3	100L	All	24	28	140	96848895	96789247	96809940	80	100	96579722	96480015
	2	-	4	112M	All	24	28	140	96848895	96789247	96809940	80	100	96579722	96480015
	4	0.25	0.25	71A	All	24	14	125	96848892	96789247	96809939	80	100	96579717	96480015
	4	0.37	0.37	71B	All	24	14	125	96848892	96789247	96809939	80	100	96579717	96480015
	4	-	0.55	80A	All	24	19	125	96848893	96789247	96809939	80	100	96579719	96480015
32- 160.1	2	1.5	-	90S	All	24	24	125	96848894	96789247	96809939	80	100	96579720	96480015
	2	2.2	2.2	90L	All	24	24	125	96848894	96789247	96809939	80	100	96579720	96480015
	2	3	3	100L	All	24	28	140	96848895	96789247	96809940	80	100	96579722	96480015
	2	4	4	112M	All	24	28	140	96848895	96789247	96809940	80	100	96579722	96480015
	2	-	5.5	132S	All	24	38	160	96848896	96789247	96809941	95	100	96579726	96480016
	2	-	7.5	132S	All	24	38	160	96848896	96789247	96809941	95	100	96579726	96480016
	4	0.25	-	71A	All	24	14	125	96848892	96789247	96809939	80	100	96579717	96480015
	4	0.37	0.37	71B	All	24	14	125	96848892	96789247	96809939	80	100	96579717	96480015
	4	0.55	0.55	80A	All	24	19	125	96848893	96789247	96809939	80	100	96579719	96480015
	4	-	0.75	80B	All	24	19	125	96848893	96789247	96809939	80	100	96579719	96480015
32- 200.1	2	3	-	100L	All	24	28	140	96848895	96789247	96809940	80	100	96579722	96480015
	2	4	4	112M	All	24	28	140	96848895	96789247	96809940	80	100	96579722	96480015
	2	5.5	5.5	132S	All	24	38	160	96848896	96789247	96809941	95	100	96579726	96480016
	2	7.5	7.5	132S	All	24	38	160	96848896	96789247	96809941	95	100	96579726	96480016
	2	-	11	160M	All	24	42	180	96848897	96789247	96809941	95	100	96579731	96480016
	4	0.37	-	71B	All	24	14	125	96848892	96789247	96809939	80	100	96579717	96480015
	4	0.55	0.55	80A	All	24	19	125	96848893	96789247	96809939	80	100	96579719	96480015
	4	0.75	0.75	80B	All	24	19	125	96848893	96789247	96809939	80	100	96579719	96480015
	4	-	1.1	90S	All	24	24	125	96848894	96789247	96809939	80	100	96579720	96480015
	4	-	1.5	90L	All	24	24	125	96848894	96789247	96809939	80	100	96579720	96480015

Pump type	Motor data					Shaft dia.		Grundfos standard coupling				Flender spacer coupling			
	Pole	Power [kW]		Frame size	Make	Pump	Motor	Coupling diameter	Coupling complete	Rubber	Bolts	Coupling diameter	Spacer length	Coupling complete	Rubber
		50 Hz	60 Hz			[mm]	[mm]	[mm]				[mm]	[mm]		
40- 125	2	1.5	-	90S	All	24	24	125	96848894	96789247	96809939	80	100	96579720	96480015
	2	2.2	-	90L	All	24	24	125	96848894	96789247	96809939	80	100	96579720	96480015
	2	3	3	100L	All	24	28	140	96848895	96789247	96809940	80	100	96579722	96480015
	2	4	4	112M	All	24	28	140	96848895	96789247	96809940	80	100	96579722	96480015
	2	5.5	5.5	132S	All	24	38	160	96848896	96789247	96809941	95	100	96579726	96480016
	2	-	7.5	132S	All	24	38	160	96848896	96789247	96809941	95	100	96579726	96480016
	2	-	11	160M	All	24	42	180	96848897	96789247	96809941	95	100	96579731	96480016
	4	0.25	-	71A	All	24	14	125	96848892	96789247	96809939	80	100	96579717	96480015
	4	0.37	0.37	71B	All	24	14	125	96848892	96789247	96809939	80	100	96579717	96480015
	4	0.55	0.55	80A	All	24	19	125	96848893	96789247	96809939	80	100	96579719	96480015
	4	-	0.75	80B	All	24	19	125	96848893	96789247	96809939	80	100	96579719	96480015
	4	-	1.1	90S	All	24	24	125	96848894	96789247	96809939	80	100	96579720	96480015
40- 160	2	4	-	112M	All	24	28	140	96848895	96789247	96809940	80	100	96579722	96480015
	2	5.5	5.5	132S	All	24	38	160	96848896	96789247	96809941	95	100	96579726	96480016
	2	7.5	7.5	132S	All	24	38	160	96848896	96789247	96809941	95	100	96579726	96480016
	2	11	11	160M	All	24	42	180	96848897	96789247	96809941	95	100	96579731	96480016
	2	-	15	160M	All	24	42	180	96848897	96789247	96809941	95	100	96579731	96480016
	4	0.37	-	71B	All	24	14	125	96848892	96789247	96809939	80	100	96579717	96480015
	4	0.55	0.55	80A	All	24	19	125	96848893	96789247	96809939	80	100	96579719	96480015
	4	0.75	0.75	80B	All	24	19	125	96848893	96789247	96809939	80	100	96579719	96480015
	4	1.1	1.1	90S	All	24	24	125	96848894	96789247	96809939	80	100	96579720	96480015
	4	-	1.5	90L	All	24	24	125	96848894	96789247	96809939	80	100	96579720	96480015
	4	-	2.2	100L	All	24	28	140	96848895	96789247	96809940	80	100	96579722	96480015
40- 200	2	5.5	-	132S	All	24	38	160	96848896	96789247	96809941	95	100	96579726	96480016
	2	7.5	-	132S	All	24	38	160	96848896	96789247	96809941	95	100	96579726	96480016
	2	11	11	160M	All	24	42	180	96848897	96789247	96809941	95	100	96579731	96480016
	2	15	15	160M	All	24	42	180	96848897	96789247	96809941	95	100	96579731	96480016
	2	-	18.5	160L	All	24	42	180	96848897	96789247	96809941	95	100	96579731	96480016
	2	-	22	180M	All	24	48	200	96848898	96789269	96809942	110	100	96579733	96480017
	2	-	30	200L	All	24	55	200	96848899	96789269	96809942	125	100	96579763	96480018
	4	0.75	-	80B	All	24	19	125	96848893	96789247	96809939	80	100	96579719	96480015
	4	1.1	1.1	90S	All	24	24	125	96848894	96789247	96809939	80	100	96579720	96480015
	4	1.5	1.5	90L	All	24	24	125	96848894	96789247	96809939	80	100	96579720	96480015
	4	2.2	2.2	100L	All	24	28	140	96848895	96789247	96809940	80	100	96579722	96480015
	4	-	3	100L	All	24	28	140	96848895	96789247	96809940	80	100	96579722	96480015
40- 250	2	11	-	160M	All	24	42	180	96848897	96789247	96809941	95	100	96579731	96480016
	2	15	15	160M	All	24	42	180	96848897	96789247	96809941	95	100	96579731	96480016
	2	18.5	18.5	160L	All	24	42	180	96848897	96789247	96809941	95	100	96579731	96480016
	2	22	22	180M	All	24	48	200	96848898	96789269	96809942	110	100	96579733	96480017
	2	30	30	200L	All	24	55	200	96848899	96789269	96809942	125	100	96579763	96480018
	2	-	37	200L	All	24	55	200	96848899	96789269	96809942	125	100	96579763	96480018
	2	-	45	225M	All	24	55	200	96848899	96789269	96809942	125	100	96579763	96480018
	4	1.5	-	90L	All	24	24	125	96848894	96789247	96809939	80	100	96579720	96480015
	4	2.2	2.2	100L	All	24	28	140	96848895	96789247	96809940	80	100	96579722	96480015
	4	3	3	100L	All	24	28	140	96848895	96789247	96809940	80	100	96579722	96480015
	4	-	4	112M	All	24	28	140	96848895	96789247	96809940	80	100	96579722	96480015
	4	-	5.5	132S	All	24	38	160	96848896	96789247	96809941	95	100	96579726	96480016

Pump type	Motor data					Shaft dia.		Grundfos standard coupling				Flender spacer coupling			
	Pole	Power [kW]		Frame size	Make	Pump	Motor	Coupling diameter	Coupling complete	Rubber	Bolts	Coupling diameter	Spacer length	Coupling complete	Rubber
		50 Hz	60 Hz			[mm]	[mm]	[mm]				[mm]	[mm]		
40- 315	2	22	-	180M	All	32	48	200	96848907	96789269	96809942	110	140	96579803	96480017
	2	30	-	200L	All	32	55	200	96848908	96789269	96809942	125	140	96579804	96480018
	2	37	-	200L	All	32	55	200	96848908	96789269	96809942	125	140	96579804	96480018
	2	45	-	225M	All	32	55	200	96848908	96789269	96809942	125	140	96579804	96480018
	4	3	-	100L	All	32	28	140	96848904	96789247	96809940	80	140	96579788	96480015
	4	4	-	112M	All	32	28	140	96848904	96789247	96809940	80	140	96579788	96480015
	4	5.5	5.5	132S	All	32	38	160	96848905	96789247	96809941	95	140	96579800	96480016
	4	7.5	7.5	132S	All	32	38	160	96848905	96789247	96809941	95	140	96579800	96480016
	4	-	11	160M	All	32	42	180	96848906	96789247	96809941	95	140	96579802	96480016
50- 125	2	3	-	100L	All	24	28	140	96848895	96789247	96809940	80	100	96579722	96480015
	2	4	4	112M	All	24	28	140	96848895	96789247	96809940	80	100	96579722	96480015
	2	5.5	5.5	132S	All	24	38	160	96848896	96789247	96809941	95	100	96579726	96480016
	2	7.5	7.5	132S	All	24	38	160	96848896	96789247	96809941	95	100	96579726	96480016
	2	-	11	160M	All	24	42	180	96848897	96789247	96809941	95	100	96579731	96480016
	2	-	15	160M	All	24	42	180	96848897	96789247	96809941	95	100	96579731	96480016
	4	0.37	-	71B	All	24	14	125	96848892	96789247	96809939	80	100	96579717	96480015
	4	0.55	0.55	80A	All	24	19	125	96848893	96789247	96809939	80	100	96579719	96480015
	4	0.75	0.75	80B	All	24	19	125	96848893	96789247	96809939	80	100	96579719	96480015
	4	1.1	1.1	90S	All	24	24	125	96848894	96789247	96809939	80	100	96579720	96480015
	4	-	1.5	90L	All	24	24	125	96848894	96789247	96809939	80	100	96579720	96480015
50- 160	2	5.5	-	132S	All	24	38	160	96848896	96789247	96809941	95	100	96579726	96480016
	2	7.5	7.5	132S	All	24	38	160	96848896	96789247	96809941	95	100	96579726	96480016
	2	11	11	160M	All	24	42	180	96848897	96789247	96809941	95	100	96579731	96480016
	2	15	15	160M	All	24	42	180	96848897	96789247	96809941	95	100	96579731	96480016
	2	-	18.5	160L	All	24	42	180	96848897	96789247	96809941	95	100	96579731	96480016
	2	-	22	180M	All	24	48	200	96848898	96789269	96809942	110	100	96579733	96480017
	4	0.55	-	80A	All	24	19	125	96848893	96789247	96809939	80	100	96579719	96480015
	4	0.75	-	80B	All	24	19	125	96848893	96789247	96809939	80	100	96579719	96480015
	4	1.1	1.1	90S	All	24	24	125	96848894	96789247	96809939	80	100	96579720	96480015
	4	1.5	1.5	90L	All	24	24	125	96848894	96789247	96809939	80	100	96579720	96480015
	4	2.2	2.2	100L	All	24	28	140	96848895	96789247	96809940	80	100	96579722	96480015
	4	-	3	100L	All	24	28	140	96848895	96789247	96809940	80	100	96579722	96480015
50- 200	2	11	-	160M	All	24	42	180	96848897	96789247	96809941	95	100	96579731	96480016
	2	15	15	160M	All	24	42	180	96848897	96789247	96809941	95	100	96579731	96480016
	2	18.5	18.5	160L	All	24	42	180	96848897	96789247	96809941	95	100	96579731	96480016
	2	22	22	180M	All	24	48	200	96848898	96789269	96809942	110	100	96579733	96480017
	2	-	30	200L	All	24	55	200	96848899	96789269	96809942	125	100	96579763	96480018
	2	-	37	200L	All	24	55	200	96848899	96789269	96809942	125	100	96579763	96480018
	2	-	45	225M	All	24	55	200	96848899	96789269	96809942	125	100	96579763	96480018
	4	1.1	-	90S	All	24	24	125	96848894	96789247	96809939	80	100	96579720	96480015
	4	1.5	-	90L	All	24	24	125	96848894	96789247	96809939	80	100	96579720	96480015
	4	2.2	2.2	100L	All	24	28	140	96848895	96789247	96809940	80	100	96579722	96480015
	4	3	3	100L	All	24	28	140	96848895	96789247	96809940	80	100	96579722	96480015
	4	-	4	112M	All	24	28	140	96848895	96789247	96809940	80	100	96579722	96480015
	4	-	5.5	132S	All	24	38	160	96848896	96789247	96809941	95	100	96579726	96480016

Pump type	Motor data					Shaft dia.		Grundfos standard coupling				Flender spacer coupling			
	Pole	Power [kW]		Frame size	Make	Pump	Motor	Coupling diameter	Coupling complete	Rubber	Bolts	Coupling diameter	Spacer length	Coupling complete	Rubber
		50 Hz	60 Hz			[mm]	[mm]	[mm]				[mm]	[mm]		
50- 250	2	15	-	160M	All	24	42	180	96848897	96789247	96809941	95	100	96579731	96480016
	2	18.5	-	160L	All	24	42	180	96848897	96789247	96809941	95	100	96579731	96480016
	2	22	-	180M	All	24	48	200	96848898	96789269	96809942	110	100	96579733	96480017
	2	30	30	200L	All	24	55	200	96848899	96789269	96809942	125	100	96579763	96480018
	2	37	37	200L	All	24	55	200	96848899	96789269	96809942	125	100	96579763	96480018
	2	-	45	225M	All	24	55	200	96848899	96789269	96809942	125	100	96579763	96480018
	2	-	55	250M	All	24	60	224	96848900	96789269	96809942	140	100	96861579	96480019
	2	-	75	280S	All	24	65	224	96848901	96789269	96809942	160	100	96861580	96480040
	4	2.2	-	100L	All	24	28	140	96848895	96789247	96809940	80	100	96579722	96480015
	4	3	-	100L	All	24	28	140	96848895	96789247	96809940	80	100	96579722	96480015
	4	4	4	112M	All	24	28	140	96848895	96789247	96809940	80	100	96579722	96480015
	4	-	5.5	132S	All	24	38	160	96848896	96789247	96809941	95	100	96579726	96480016
	4	-	7.5	132M	All	24	38	160	96848896	96789247	96809941	95	100	96579726	96480016
50- 315	2	30	-	200L	All	32	55	200	96848908	96789269	96809942	125	140	96579804	96480018
	2	37	-	200L	All	32	55	200	96848908	96789269	96809942	125	140	96579804	96480018
	2	45	-	225M	All	32	55	200	96848908	96789269	96809942	125	140	96579804	96480018
	2	55	-	250M	All	32	60	224	96848909	96789269	96809942	140	140	96579805	96480019
	4	4	-	112M	All	32	28	140	96848904	96789247	96809940	80	140	96579788	96480015
	4	5.5	5.5	132S	All	32	38	160	96848905	96789247	96809941	95	140	96579800	96480016
	4	7.5	7.5	132M	All	32	38	160	96848905	96789247	96809941	95	140	96579800	96480016
	4	11	11	160M	All	32	42	180	96848906	96789247	96809941	95	140	96579802	96480016
	4	-	15	160L	All	32	42	180	96848906	96789247	96809941	95	140	96579802	96480016
65- 125	2	4	-	112M	All	24	28	140	96848895	96789247	96809940	80	100	96579722	96480015
	2	5.5	-	132S	All	24	38	160	96848896	96789247	96809941	95	100	96579726	96480016
	2	7.5	7.5	132S	All	24	38	160	96848896	96789247	96809941	95	100	96579726	96480016
	2	11	11	160M	All	24	42	180	96848897	96789247	96809941	95	100	96579731	96480016
	2	-	15	160M	All	24	42	180	96848897	96789247	96809941	95	100	96579731	96480016
	2	-	18.5	160L	All	24	42	180	96848897	96789247	96809941	95	100	96579731	96480016
	4	0.55	-	80A	All	24	19	125	96848893	96789247	96809939	80	100	96579719	96480015
	4	0.75	-	80B	All	24	19	125	96848893	96789247	96809939	80	100	96579719	96480015
	4	1.1	1.1	90S	All	24	24	125	96848894	96789247	96809939	80	100	96579720	96480015
	4	-	1.5	90L	All	24	24	125	96848894	96789247	96809939	80	100	96579720	96480015
	4	-	2.2	100L	All	24	28	140	96848895	96789247	96809940	80	100	96579722	96480015
65- 160	2	7.5	-	132S	All	24	38	160	96848896	96789247	96809941	95	100	96579726	96480016
	2	11	11	160M	All	24	42	180	96848897	96789247	96809941	95	100	96579731	96480016
	2	15	15	160M	All	24	42	180	96848897	96789247	96809941	95	100	96579731	96480016
	2	18.5	18.5	160L	All	24	42	180	96848897	96789247	96809941	95	100	96579731	96480016
	2	-	22	180M	All	24	48	200	96848898	96789269	96809942	110	100	96579733	96480017
	2	-	30	200L	All	24	55	200	96848899	96789269	96809942	125	100	96579763	96480018
	4	0.75	-	80B	All	24	19	125	96848893	96789247	96809939	80	100	96579719	96480015
	4	1.1	-	90S	All	24	24	125	96848894	96789247	96809939	80	100	96579720	96480015
	4	1.5	1.5	90L	All	24	24	125	96848894	96789247	96809939	80	100	96579720	96480015
	4	2.2	2.2	100L	All	24	28	140	96848895	96789247	96809940	80	100	96579722	96480015
	4	-	3	100L	All	24	28	140	96848895	96789247	96809940	80	100	96579722	96480015
	4	-	4	112M	All	24	28	140	96848895	96789247	96809940	80	100	96579722	96480015

Pump type	Motor data					Shaft dia.		Grundfos standard coupling				Flender spacer coupling			
	Pole	Power [kW]		Frame size	Make	Pump	Motor	Coupling diameter	Coupling complete	Rubber	Bolts	Coupling diameter	Spacer length	Coupling complete	Rubber
		50 Hz	60 Hz			[mm]	[mm]	[mm]				[mm]	[mm]		
65- 200	2	11	-	160M	All	24	42	180	96848897	96789247	96809941	95	140	96579732	96480016
	2	15	-	160M	All	24	42	180	96848897	96789247	96809941	95	140	96579732	96480016
	2	18.5	18.5	160L	All	24	42	180	96848897	96789247	96809941	95	140	96579732	96480016
	2	22	22	180M	All	24	48	200	96848898	96789269	96809942	110	140	96579755	96480017
	2	30	30	200L	All	24	55	200	96848899	96789269	96809942	125	140	96579766	96480018
	2	37	37	200L	All	24	55	200	96848899	96789269	96809942	125	140	96579766	96480018
	2	-	45	225M	All	24	55	200	96848899	96789269	96809942	125	140	96579766	96480018
	2	-	55	250M	All	24	60	224	96848900	96789269	96809942	140	140	96579780	96480019
	4	1.5	-	90L	All	24	24	125	96848894	96789247	96809939	80	140	96579721	96480015
	4	2.2	-	100L	All	24	28	140	96848895	96789247	96809940	80	140	96579724	96480015
	4	3	3	100L	All	24	28	140	96848895	96789247	96809940	80	140	96579724	96480015
	4	4	4	112M	All	24	28	140	96848895	96789247	96809940	80	140	96579724	96480015
	4	-	5.5	132S	All	24	38	160	96848896	96789247	96809941	95	140	96579729	96480016
	4	-	7.5	132M	All	24	38	160	96848896	96789247	96809941	95	140	96579729	96480016
65- 250	2	30	-	200L	All	32	55	200	96848908	96789269	96809942	125	140	96579804	96480018
	2	37	-	200L	All	32	55	200	96848908	96789269	96809942	125	140	96579804	96480018
	2	45	45	225M	All	32	55	200	96848908	96789269	96809942	125	140	96579804	96480018
	2	55	55	250M	All	32	60	224	96848909	96789269	96809942	140	140	96579805	96480019
	2	75	75	280S	All	32	65	224	96848910	96789269	96809942	160	140	96579806	96480040
	2	-	90	280M	All	32	65	224	96848910	96789269	96809942	160	140	96579806	96480040
	2	-	110	315S	All	32	65	224	96848910	96789269	96809942	160	140	96579806	96480040
	4	3	-	100L	All	32	28	140	96848904	96789247	96809940	80	140	96579788	96480015
	4	4	-	112M	All	32	28	140	96848904	96789247	96809940	80	140	96579788	96480015
	4	5.5	5.5	132S	All	32	38	160	96848905	96789247	96809941	95	140	96579800	96480016
	4	7.5	7.5	132M	All	32	38	160	96848905	96789247	96809941	95	140	96579800	96480016
	4	-	11	160M	All	32	42	180	96848906	96789247	96809941	95	140	96579802	96480016
	4	-	15	160L	All	32	42	180	96848906	96789247	96809941	95	140	96579802	96480016
65- 315	2	55	-	250M	All	32	60	224	96848909	96789269	96809942	140	140	96579805	96480019
	2	75	-	280S	All	32	65	224	96848910	96789269	96809942	160	140	96579806	96480040
	2	90	-	280M	All	32	65	224	96848910	96789269	96809942	160	140	96579806	96480040
	2	110	-	315S	All	32	65	224	96848910	96789269	96809942	160	140	96579806	96480040
	4	5.5	-	132S	All	32	38	160	96848905	96789247	96809941	95	140	96579800	96480016
	4	7.5	7.5	132M	All	32	38	160	96848905	96789247	96809941	95	140	96579800	96480016
	4	11	11	160M	All	32	42	180	96848906	96789247	96809941	95	140	96579802	96480016
	4	15	15	160L	All	32	42	180	96848906	96789247	96809941	95	140	96579802	96480016
	4	-	18.5	180M	All	32	48	200	96848907	96789269	96809942	110	140	96579803	96480017
	4	-	22	180L	All	32	48	200	96848907	96789269	96809942	110	140	96579803	96480017
80- 160	2	11	-	160M	All	24	42	180	96848897	96789247	96809941	95	140	96579732	96480016
	2	15	-	160M	All	24	42	180	96848897	96789247	96809941	95	140	96579732	96480016
	2	18.5	-	160L	All	24	42	180	96848897	96789247	96809941	95	140	96579732	96480016
	2	22	22	180M	All	24	48	200	96848898	96789269	96809942	110	140	96579755	96480017
	2	30	30	200L	All	24	55	200	96848899	96789269	96809942	125	140	96579766	96480018
	2	-	37	200L	All	24	55	200	96848899	96789269	96809942	125	140	96579766	96480018
	2	-	45	225M	All	24	55	200	96848899	96789269	96809942	125	140	96579766	96480018
	2	-	55	250M	All	24	60	224	96848900	96789269	96809942	140	140	96579780	96480019
	4	1.5	-	90L	All	24	24	125	96848894	96789247	96809939	80	140	96579721	96480015
	4	2.2	-	100L	All	24	28	140	96848895	96789247	96809940	80	140	96579724	96480015
	4	3	3	100L	All	24	28	140	96848895	96789247	96809940	80	140	96579724	96480015
	4	4	4	112M	All	24	28	140	96848895	96789247	96809940	80	140	96579724	96480015
	4	-	5.5	132S	All	24	38	160	96848896	96789247	96809941	95	140	96579729	96480016

Pump type	Motor data					Shaft dia.		Grundfos standard coupling				Flender spacer coupling			
	Pole	Power [kW]		Frame size	Make	Pump	Motor	Coupling diameter	Coupling complete	Rubber	Bolts	Coupling diameter	Spacer length	Coupling complete	Rubber
		50 Hz	60 Hz			[mm]	[mm]	[mm]				[mm]	[mm]		
80- 200	2	22	-	180M	All	32	48	200	96848907	96789269	96809942	110	140	96579803	96480017
	2	30	-	200L	All	32	55	200	96848908	96789269	96809942	125	140	96579804	96480018
	2	37	37	200L	All	32	55	200	96848908	96789269	96809942	125	140	96579804	96480018
	2	45	45	225M	All	32	55	200	96848908	96789269	96809942	125	140	96579804	96480018
	2	55	55	250M	All	32	60	224	96848909	96789269	96809942	140	140	96579805	96480019
	2	-	75	280S	All	32	65	224	96848910	96789269	96809942	160	140	96579806	96480040
	2	-	90	280M	All	32	65	224	96848910	96789269	96809942	160	140	96579806	96480040
	4	2.2	-	100L	All	32	28	140	96848904	96789247	96809940	80	140	96579788	96480015
	4	3	-	100L	All	32	28	140	96848904	96789247	96809940	80	140	96579788	96480015
	4	4	4	112M	All	32	28	140	96848904	96789247	96809940	80	140	96579788	96480015
	4	5.5	5.5	132S	All	32	38	160	96848905	96789247	96809941	95	140	96579800	96480016
	4	7.5	7.5	132M	All	32	38	160	96848905	96789247	96809941	95	140	96579800	96480016
	4	-	11	160M	All	32	42	180	96848906	96789247	96809941	95	140	96579802	96480016
80- 250	2	45	-	225M	All	32	55	200	96848908	96789269	96809942	125	140	96579804	96480018
	2	55	-	250M	All	32	60	224	96848909	96789269	96809942	140	140	96579805	96480019
	2	75	75	280S	All	32	65	224	96848910	96789269	96809942	160	140	96579806	96480040
	2	90	90	280M	All	32	65	224	96848910	96789269	96809942	160	140	96579806	96480040
	2	-	110	315S	All	32	65	224	96848910	96789269	96809942	160	140	96579806	96480040
	2	-	132	315M	All	32	65	224	96848910	96789269	96809942	160	140	96579806	96480040
	2	-	160	315L	All	32	65	224	96848910	96789269	96809942	160	140	96579806	96480040
	4	5.5	-	132S	All	32	38	160	96848905	96789247	96809941	95	140	96579800	96480016
	4	7.5	7.5	132M	All	32	38	160	96848905	96789247	96809941	95	140	96579800	96480016
	4	11	11	160M	All	32	42	180	96848906	96789247	96809941	95	140	96579802	96480016
	4	-	15	160L	All	32	42	180	96848906	96789247	96809941	95	140	96579802	96480016
	4	-	18.5	180M	All	32	48	200	96848907	96789269	96809942	110	140	96579803	96480017
80- 315	2	90	-	280M	All	32	65	224	96848910	96789269	96809942	160	140	96579806	96480040
	2	110	-	315S	All	32	65	224	96848910	96789269	96809942	160	140	96579806	96480040
	2	132	-	315M	All	32	65	224	96848910	96789269	96809942	160	140	96579806	96480040
	4	11	-	160M	All	32	42	180	96848906	96789247	96809941	95	140	96579802	96480016
	4	15	-	160L	All	32	42	180	96848906	96789247	96809941	95	140	96579802	96480016
	4	18.5	18.5	180M	All	32	48	200	96848907	96789269	96809942	110	140	96579803	96480017
	4	22	22	180L	All	32	48	200	96848907	96789269	96809942	110	140	96579803	96480017
	4	-	30	200L	All	32	55	200	96848908	96789269	96809942	125	140	96579804	96480018
	4	-	37	225S	All	32	60	224	96848909	96789269	96809942	140	140	96579805	96480019
	4	-	45	225M	All	32	60	224	96848909	96789269	96809942	140	140	96579805	96480019
80- 400	4	18.5	-	180M	All	42	48	200	96848916	96789269	96809942	110	140	96861611	96480017
	4	22	-	180L	All	42	48	200	96848916	96789269	96809942	110	140	96861611	96480017
	4	30	30	200L	All	42	55	200	96848917	96789269	96809942	125	140	96861613	96480018
	4	37	37	225S	All	42	60	224	96848918	96789269	96809942	140	140	96861615	96480019
	4	45	45	225M	All	42	60	224	96848918	96789269	96809942	140	140	96861615	96480019
	4	-	55	250M	Siemens, MMG-E	42	65	224	96848919	96789269	96809942	160	140	96861617	96480040
	4	-	55	250SC	MMG-G, EFF1 & EFF2	42	70	250	96848920	96789274	96809943	180	140	96861620	96796254
	4	-	75	280S	Siemens, MMG-E	42	75	250	96848921	96789274	96809943	180	140	96861623	96796254
	4	-	75	250MC	MMG-G, EFF1 & EFF2	42	70	250	96848920	96789274	96809943	180	140	96861620	96796254
	4	-	90	280M	Siemens, MMG-E	42	75	250	96848921	96789274	96809943	180	140	96861623	96796254
	4	-	90	280S	MMG-G, EFF1 & EFF2	42	80	250	96848922	96789274	96809943	200	140	96861626	96796255
80- 315*	2	160	-	315L	All	42	65	224	96848919	96789269	96809942	160	140	96861617	96480040

Pump type	Motor data					Shaft dia.		Grundfos standard coupling				Flender spacer coupling			
	Pole	Power [kW]		Frame size	Make	Pump	Motor	Coupling diameter	Coupling complete	Rubber	Bolts	Coupling diameter	Spacer length	Coupling complete	Rubber
		50 Hz	60 Hz			[mm]	[mm]	[mm]				[mm]	[mm]		
100- 160	2	22	-	180M	All	24	48	200	96848898	96789269	96809942	110	140	96579755	96480017
	2	30	-	200L	All	24	55	200	96848899	96789269	96809942	125	140	96579766	96480018
	2	37	37	200L	All	24	55	200	96848899	96789269	96809942	125	140	96579766	96480018
	2	-	45	225M	All	24	55	200	96848899	96789269	96809942	125	140	96579766	96480018
	2	-	55	250M	All	24	60	224	96848900	96789269	96809942	140	140	96579780	96480019
	2	-	75	280S	All	24	65	224	96848901	96789269	96809942	160	140	96579781	96480040
	4	2.2	-	100L	All	24	28	140	96848895	96789247	96809940	80	140	96579724	96480015
	4	3	-	100L	All	24	28	140	96848895	96789247	96809940	80	140	96579724	96480015
	4	4	4	112M	All	24	28	140	96848895	96789247	96809940	80	140	96579724	96480015
	4	-	5.5	132S	All	24	38	160	96848896	96789247	96809941	95	140	96579729	96480016
	4	-	7.5	132M	All	24	38	160	96848896	96789247	96809941	95	140	96579729	96480016
	6	0.55	-	80B	All	24	19	125	96848893	96789247	96809939	80	140	96861578	96480015
	6	0.75	-	90S	All	24	24	125	96848894	96789247	96809939	80	140	96579721	96480015
	6	1.1	1.1	90L	All	24	24	125	96848894	96789247	96809939	80	140	96579721	96480015
	6	-	1.5	100L	All	24	28	140	96848895	96789247	96809940	80	140	96579724	96480015
	6	-	2.2	112M	All	24	28	140	96848895	96789247	96809940	80	140	96579724	96480015
100- 200	2	30	-	200L	All	32	55	200	96848908	96789269	96809942	125	140	96579804	96480018
	2	37	-	200L	All	32	55	200	96848908	96789269	96809942	125	140	96579804	96480018
	2	45	-	225M	All	32	55	200	96848908	96789269	96809942	125	140	96579804	96480018
	2	55	55	250M	All	32	60	224	96848909	96789269	96809942	140	140	96579805	96480019
	2	75	75	280S	All	32	65	224	96848910	96789269	96809942	160	140	96579806	96480040
	2	-	90	280M	All	32	65	224	96848910	96789269	96809942	160	140	96579806	96480040
	2	-	110	315S	All	32	65	224	96848910	96789269	96809942	160	140	96579806	96480040
	2	-	132	315M	All	32	65	224	96848910	96789269	96809942	160	140	96579806	96480040
	4	4	-	112M	All	32	28	140	96848904	96789247	96809940	80	140	96579788	96480015
	4	5.5	5.5	132S	All	32	38	160	96848905	96789247	96809941	95	140	96579800	96480016
	4	7.5	7.5	132M	All	32	38	160	96848905	96789247	96809941	95	140	96579800	96480016
	4	11	11	160M	All	32	42	180	96848906	96789247	96809941	95	140	96579802	96480016
	4	-	15	160L	All	32	42	180	96848906	96789247	96809941	95	140	96579802	96480016
	4	-	18.5	180M	All	32	48	200	96848907	96789269	96809942	110	140	96579803	96480017
	6	1.1	-	90L	All	32	24	125	96848903	96789247	96809939	80	140	96579785	96480015
	6	1.5	1.5	100L	All	32	28	140	96848904	96789247	96809940	80	140	96579788	96480015
	6	2.2	2.2	112M	All	32	28	140	96848904	96789247	96809940	80	140	96579788	96480015
	6	3	3	132SA	All	32	38	160	96848905	96789247	96809941	95	140	96579800	96480016
	6	-	4	132MA	All	32	38	160	96848905	96789247	96809941	95	140	96579800	96480016
	6	-	5.5	132MB	All	32	38	160	96848905	96789247	96809941	95	140	96579800	96480016

Pump type	Motor data					Shaft dia.		Grundfos standard coupling				Flender spacer coupling			
	Pole	Power [kW]		Frame size	Make	Pump	Motor	Coupling diameter	Coupling complete	Rubber	Bolts	Coupling diameter	Spacer length	Coupling complete	Rubber
		50 Hz	60 Hz			[mm]	[mm]	[mm]				[mm]	[mm]		
100- 250	2	55	-	250M	All	32	60	224	96848909	96789269	96809942	140	140	96579805	96480019
	2	75	-	280S	All	32	65	224	96848910	96789269	96809942	160	140	96579806	96480040
	2	90	-	280M	All	32	65	224	96848910	96789269	96809942	160	140	96579806	96480040
	2	110	110	315S	All	32	65	224	96848910	96789269	96809942	160	140	96579806	96480040
	2	132	132	315M	All	32	65	224	96848910	96789269	96809942	160	140	96579806	96480040
	2	-	160	315L	All	32	65	224	96848910	96789269	96809942	160	140	96579806	96480040
	2	-	200	315L	All	32	65	224	96848910	96789269	96809942	160	140	96579806	96480040
	2	-	280	315L	Siemens	32	65	224	96848910	96789269	96809942	200	140	96706822	96796255
	2	-	250	355	MMG-E	32	75	250	96848912	96789274	96809943	180	140	96861604	96796254
	2	-	250	315	MMG-G, EFF1	32	70	250	96848911	96789274	96809943	180	140	96861603	96796254
	2	-	250	355	MMG-G, EFF2	32	75	250	96848912	96789274	96809943	180	140	96861604	96796254
	4	7.5	-	132M	All	32	38	160	96848905	96789247	96809941	95	140	96579800	96480016
	4	11	-	160M	All	32	42	180	96848906	96789247	96809941	95	140	96579802	96480016
	4	15	15	160L	All	32	42	180	96848906	96789247	96809941	95	140	96579802	96480016
	4	18.5	18.5	180M	All	32	48	200	96848907	96789269	96809942	110	140	96579803	96480017
	4	-	22	180L	All	32	48	200	96848907	96789269	96809942	110	140	96579803	96480017
	4	-	30	200L	All	32	55	200	96848908	96789269	96809942	125	140	96579804	96480018
	6	2.2	-	112M	All	32	28	140	96848904	96789247	96809940	80	140	96579788	96480015
	6	3	-	132SA	All	32	38	160	96848905	96789247	96809941	95	140	96579800	96480016
	6	4	4	132MA	All	32	38	160	96848905	96789247	96809941	95	140	96579800	96480016
	6	5.5	5.5	132MB	All	32	38	160	96848905	96789247	96809941	95	140	96579800	96480016
	6	-	7.5	160M	All	32	42	180	96848906	96789247	96809941	95	140	96579802	96480016
	6	-	11	160L	All	32	42	180	96848906	96789247	96809941	95	140	96579802	96480016
100- 315	2	110	-	315S	All	32	65	224	96848910	96789269	96809942	160	140	96579806	96480040
	2	132	-	315M	All	32	65	224	96848910	96789269	96809942	160	140	96579806	96480040
	4	15	-	160L	All	32	42	180	96848906	96789247	96809941	95	140	96579802	96480016
	4	18.5	-	180M	All	32	48	200	96848907	96789269	96809942	110	140	96579803	96480017
	4	22	22	180L	All	32	48	200	96848907	96789269	96809942	110	140	96579803	96480017
	4	30	30	200L	All	32	55	200	96848908	96789269	96809942	125	140	96579804	96480018
	4	-	37	225S	All	32	60	224	96848909	96789269	96809942	140	140	96579805	96480019
	4	-	45	225M	All	32	60	224	96848909	96789269	96809942	140	140	96579805	96480019
	4	-	55	250M	Siemens, MMG-E	32	65	224	96848910	96789269	96809942	160	140	96579806	96480040
	4	-	55	250SC	MMG-G, EFF1 & EFF2	32	70	250	96848911	96789274	96809943	180	140	96861603	96796254
	6	4	-	132MA	All	32	38	160	96848905	96789247	96809941	95	140	96579800	96480016
	6	5.5	-	132MB	All	32	38	160	96848905	96789247	96809941	95	140	96579800	96480016
	6	7.5	7.5	160M	All	32	42	180	96848906	96789247	96809941	95	140	96579802	96480016
	6	11	11	160L	All	32	42	180	96848906	96789247	96809941	95	140	96579802	96480016
	6	-	15	180L	All	32	48	200	96848907	96789269	96809942	110	140	96579803	96480017

Pump type	Motor data					Shaft dia.		Grundfos standard coupling				Flender spacer coupling			
	Pole	Power [kW]		Frame size	Make	Pump	Motor	Coupling diameter	Coupling complete	Rubber	Bolts	Coupling diameter	Spacer length	Coupling complete	Rubber
		50 Hz	60 Hz			[mm]	[mm]	[mm]				[mm]	[mm]		
100- 400	4	22	-	180L	All	42	48	200	96848916	96789269	96809942	110	140	96861611	96480017
	4	30	-	200L	All	42	55	200	96848917	96789269	96809942	125	140	96861613	96480018
	4	37	37	225S	All	42	60	224	96848918	96789269	96809942	140	140	96861615	96480019
	4	45	45	225M	All	42	60	224	96848918	96789269	96809942	140	140	96861615	96480019
	4	55	55	250M	Siemens, MMG-E	42	65	224	96848919	96789269	96809942	160	140	96861617	96480040
	4	55	55	250SC	MMG-G, EFF1 & EFF2	42	70	250	96848920	96789274	96809943	180	140	96861620	96796254
	4	-	75	280S	Siemens, MMG-E	42	75	250	96848921	96789274	96809943	180	140	96861623	96796254
	4	-	75	250MC	MMG-G, EFF1 & EFF2	42	70	250	96848920	96789274	96809943	180	140	96861620	96796254
	4	-	90	280M	Siemens, MMG-E	42	75	250	96848921	96789274	96809943	180	140	96861623	96796254
	4	-	90	280S	MMG-G, EFF1 & EFF2	42	80	250	96848922	96789274	96809943	200	140	96861626	96796255
	6	7.5	-	160M	All	42	42	180	96848915	96789247	96809941	95	140	96861609	96480016
	6	11	11	160L	All	42	42	180	96848915	96789247	96809941	95	140	96861609	96480016
	6	15	15	180L	All	42	48	200	96848916	96789269	96809942	110	140	96861611	96480017
	6	18.5	18.5	200LA	All	42	55	200	96848917	96789269	96809942	125	140	96861613	96480018
	6	-	22	200LB	All	42	55	200	96848917	96789269	96809942	125	140	96861613	96480018
	6	-	30	225M	All	42	60	224	96848918	96789269	96809942	140	140	96861615	96480019
100- 250*	2	-	200	315L	All	42	65	224	96848919	96789269	96809942	160	140	96861617	96480040
100- 315*	2	160	-	315L	All	42	65	224	96848919	96789269	96809942	160	140	96861617	96480040
	2	200	-	315L	All	42	65	224	96848919	96789269	96809942	180	140	96861618	96796254
125- 200	2	45	-	225M	All	32	55	200	96848908	96789269	96809942	125	140	96579804	96480018
	2	55	-	250M	All	32	60	224	96848909	96789269	96809942	140	140	96579805	96480019
	2	75	75	280S	All	32	65	224	96848910	96789269	96809942	160	140	96579806	96480040
	2	90	90	280M	All	32	65	224	96848910	96789269	96809942	160	140	96579806	96480040
	2	110	110	315S	All	32	65	224	96848910	96789269	96809942	160	140	96579806	96480040
	2	-	132	315M	All	32	65	224	96848910	96789269	96809942	160	140	96579806	96480040
	2	-	160	315L	All	32	65	224	96848910	96789269	96809942	160	140	96579806	96480040
	2	-	200	315L	All	32	65	224	96848910	96789269	96809942	160	140	96579806	96480040
	4	5.5	-	132S	All	32	38	160	96848905	96789247	96809941	95	140	96579800	96480016
	4	7.5	-	132M	All	32	38	160	96848905	96789247	96809941	95	140	96579800	96480016
	4	11	11	160M	All	32	42	180	96848906	96789247	96809941	95	140	96579802	96480016
	4	15	15	160L	All	32	42	180	96848906	96789247	96809941	95	140	96579802	96480016
	4	-	18.5	180M	All	32	48	200	96848907	96789269	96809942	110	140	96579803	96480017
	4	-	22	180L	All	32	48	200	96848907	96789269	96809942	110	140	96579803	96480017
	6	1.5	-	100L	All	32	28	140	96848904	96789247	96809940	80	140	96579788	96480015
	6	2.2	-	112M	All	32	28	140	96848904	96789247	96809940	80	140	96579788	96480015
	6	3	3	132SA	All	32	38	160	96848905	96789247	96809941	95	140	96579800	96480016
	6	4	4	132MA	All	32	38	160	96848905	96789247	96809941	95	140	96579800	96480016
	6	-	5.5	132MB	All	32	38	160	96848905	96789247	96809941	95	140	96579800	96480016
	6	-	7.5	160M	All	32	42	180	96848906	96789247	96809941	95	140	96579802	96480016

Pump type	Motor data					Shaft dia.		Grundfos standard coupling				Flender spacer coupling			
	Pole	Power [kW]		Frame size	Make	Pump	Motor	Coupling diameter	Coupling complete	Rubber	Bolts	Coupling diameter	Spacer length	Coupling complete	Rubber
		50 Hz	60 Hz			[mm]	[mm]	[mm]				[mm]	[mm]		
125- 250	4	11	-	160M	All	32	42	180	96848906	96789247	96809941	95	140	96579802	96480016
	4	15	-	160L	All	32	42	180	96848906	96789247	96809941	95	140	96579802	96480016
	4	18.5	18.5	180M	All	32	48	200	96848907	96789269	96809942	110	140	96579803	96480017
	4	22	22	180L	All	32	48	200	96848907	96789269	96809942	110	140	96579803	96480017
	4	30	30	200L	All	32	55	200	96848908	96789269	96809942	125	140	96579804	96480018
	4	-	37	225S	All	32	60	224	96848909	96789269	96809942	140	140	96579805	96480019
	4	-	45	225M	All	32	60	224	96848909	96789269	96809942	140	140	96579805	96480019
	6	3	-	132SA	All	32	38	160	96848905	96789247	96809941	95	140	96579800	96480016
	6	4	-	132MA	All	32	38	160	96848905	96789247	96809941	95	140	96579800	96480016
	6	5.5	5.5	132MB	All	32	38	160	96848905	96789247	96809941	95	140	96579800	96480016
	6	7.5	7.5	160M	All	32	42	180	96848906	96789247	96809941	95	140	96579802	96480016
	6	-	11	160L	All	32	42	180	96848906	96789247	96809941	95	140	96579802	96480016
	6	-	15	180L	All	32	48	200	96848907	96789269	96809942	110	140	96579803	96480017
125- 250*	2	90	-	280M	All	42	65	224	96848919	96789269	96809942	160	140	96861617	96480040
	2	110	-	315S	All	42	65	224	96848919	96789269	96809942	160	140	96861617	96480040
	2	132	-	315M	All	42	65	224	96848919	96789269	96809942	160	140	96861617	96480040
	2	160	160	315L	All	42	65	224	96848919	96789269	96809942	160	140	96861617	96480040
	2	200	200	315L	All	42	65	224	96848919	96789269	96809942	180	140	96861618	96796254
	2	-	280	315L	Siemens	42	65	224	96848919	96789269	96809942	180	140	96861618	96796254
	2	-	250	355	MMG-E	42	75	250	96848921	96789274	96809943	180	140	96861623	96796254
	2	-	250	315	MMG-G, EFF1	42	70	250	96848920	96789274	96809943	180	140	96861620	96796254
	2	-	250	355	MMG-G, EFF2	42	75	250	96848921	96789274	96809943	180	140	96861623	96796254
	2	-	353	315L	Siemens	42	65	224	96848919	96789269	96809942	180	140	96861618	96796254
	2	-	315	355	MMG-E	42	75	250	96848921	96789274	96809943	180	140	96861623	96796254
	2	-	315	315	MMG-G, EFF1	42	70	250	96848920	96789274	96809943	180	140	96861620	96796254
	2	-	315	355	MMG-G, EFF2	42	75	250	96848921	96789274	96809943	180	140	96861623	96796254
125- 315	2	132	-	315M	All	42	65	224	96848919	96789269	96809942	160	140	96861617	96480040
	2	160	-	315L	All	42	65	224	96848919	96789269	96809942	160	140	96861617	96480040
	2	200	-	315L	All	42	65	224	96848919	96789269	96809942	180	140	96861618	96796254
	2	250	-	315L	Siemens	42	65	224	96848919	96789269	96809942	180	140	96861618	96796254
	2	250	-	355	MMG-E	42	75	250	96848921	96789274	96809943	180	140	96861623	96796254
	2	250	-	315	MMG-G, EFF1	42	70	250	96848920	96789274	96809943	180	140	96861620	96796254
	2	250	-	355	MMG-G, EFF2	42	75	250	96848921	96789274	96809943	180	140	96861623	96796254
	4	18.5	-	180M	All	42	48	200	96848916	96789269	96809942	110	140	96861611	96480017
	4	22	-	180L	All	42	48	200	96848916	96789269	96809942	110	140	96861611	96480017
	4	30	30	200L	All	42	55	200	96848917	96789269	96809942	125	140	96861613	96480018
	4	37	37	225S	All	42	60	224	96848918	96789269	96809942	140	140	96861615	96480019
	4	45	45	225M	All	42	60	224	96848918	96789269	96809942	140	140	96861615	96480019
	4	-	55	250M	Siemens, MMG-E	42	65	224	96848919	96789269	96809942	160	140	96861617	96480040
	4	-	55	250SC	MMG-G, EFF1 & EFF2	42	70	250	96848920	96789274	96809943	180	140	96861620	96796254
	4	-	75	280S	Siemens, MMG-E	42	75	250	96848921	96789274	96809943	180	140	96861623	96796254
	4	-	75	250MC	MMG-G, EFF1 & EFF2	42	70	250	96848920	96789274	96809943	180	140	96861620	96796254
	6	5.5	-	132MB	All	42	38	160	96848914	96789247	96809941	95	140	96861607	96480016
	6	7.5	7.5	160M	All	42	42	180	96848915	96789247	96809941	95	140	96861609	96480016
	6	11	11	160L	All	42	42	180	96848915	96789247	96809941	95	140	96861609	96480016
	6	15	15	180L	All	42	48	200	96848916	96789269	96809942	110	140	96861611	96480017
	6	-	18.5	200LA	All	42	55	200	96848917	96789269	96809942	125	140	96861613	96480018
	6	-	22	200LB	All	42	55	200	96848917	96789269	96809942	125	140	96861613	96480018

Pump type	Motor data					Shaft dia.		Grundfos standard coupling				Flender spacer coupling			
	Pole	Power [kW]		Frame size	Make	Pump	Motor	Coupling diameter	Coupling complete	Rubber	Bolts	Coupling diameter	Spacer length	Coupling complete	Rubber
		50 Hz	60 Hz			[mm]	[mm]	[mm]				[mm]	[mm]		
125- 400	4	37	-	225S	All	42	60	224	96848918	96789269	96809942	140	140	96861615	96480019
	4	45	-	225M	All	42	60	224	96848918	96789269	96809942	140	140	96861615	96480019
	4	55	55	250M	Siemens, MMG-E	42	65	224	96848919	96789269	96809942	160	140	96861617	96480040
	4	55	55	250SC	MMG-G, EFF1 & EFF2	42	70	250	96848920	96789274	96809943	180	140	96861620	96796254
	4	75	75	280S	Siemens, MMG-E	42	75	250	96848921	96789274	96809943	180	140	96861623	96796254
	4	75	75	250MC	MMG-G, EFF1 & EFF2	42	70	250	96848920	96789274	96809943	180	140	96861620	96796254
	4	90	90	280M	Siemens, MMG-E	42	75	250	96848921	96789274	96809943	180	140	96861623	96796254
	4	90	90	280S	MMG-G, EFF1 & EFF2	42	80	250	96848922	96789274	96809943	200	140	96861626	96796255
	4	-	110	315S	Siemens, MMG-E	42	80	250	96848922	96789274	96809943	200	140	96861626	96796255
	4	-	110	280M	MMG-G, EFF1 & EFF2	42	80	250	96848922	96789274	96809943	200	140	96861626	96796255
	4	-	132	315M	Siemens, MMG-E	42	80	250	96848922	96789274	96809943	200	140	96861626	96796255
	4	-	132	315S	MMG-G, EFF1 & EFF2	42	85	250	96848923	96789274	96809943	200	140	96861628	96796255
	6	11	-	160L	All	42	42	180	96848915	96789247	96809941	95	140	96861609	96480016
	6	15	-	180L	All	42	48	200	96848916	96789269	96809942	110	140	96861611	96480017
	6	18.5	18.5	200LA	Siemens	42	55	200	96848917	96789269	96809942	125	140	96861613	96480018
	6	22	22	200LB	Siemens	42	55	200	96848917	96789269	96809942	125	140	96861613	96480018
	6	30	30	225M	Siemens	42	60	224	96848918	96789269	96809942	140	140	96861615	96480019
	6	-	37	250M	Siemens	42	65	224	96848919	96789269	96809942	160	140	96861617	96480040
	6	-	37	250S	MMG-G, EFF1 & EFF2	42	70	250	96848920	96789274	96809943	180	140	96861620	96796254
	6	-	45	280S	Siemens, MMG-E	42	75	250	96848921	96789274	96809943	180	140	96861623	96796254
	6	-	45	250M	MMG-G, EFF1 & EFF2	42	70	250	96848920	96789274	96809943	180	140	96861620	96796254
125- 500	4	55	-	250M	Siemens, MMG-E	60	65	224	96848940	96789269	96809942	160	180	96861648	96480040
	4	55	-	250SC	MMG-G, EFF1 & EFF2	60	70	250	96848941	96789274	96809943	180	180	96861650	96796254
	4	75	-	280S	Siemens, MMG-E	60	75	250	96848942	96789274	96809943	180	180	96861651	96796254
	4	75	-	250MC	MMG-G, EFF1 & EFF2	60	70	250	96848941	96789274	96809943	180	180	96861650	96796254
	4	90	-	280M	Siemens, MMG-E	60	75	250	96848942	96789274	96809943	180	180	96861651	96796254
	4	90	-	280S	MMG-G, EFF1 & EFF2	60	80	250	96848943	96789274	96809943	200	180	96861653	96796255
	4	110	110	315S	Siemens, MMG-E	60	80	250	96848943	96789274	96809943	200	180	96861653	96796255
	4	110	110	280M	MMG-G, EFF1 & EFF2	60	80	250	96848943	96789274	96809943	200	180	96861653	96796255
	4	132	132	315M	Siemens, MMG-E	60	80	250	96848943	96789274	96809943	200	180	96861653	96796255
	4	132	132	315S	MMG-G, EFF1 & EFF2	60	85	250	96848944	96789274	96809943	225	180	96861654	96796259
	4	160	160	315M	Siemens, MMG-E	60	80	250	96848943	96789274	96809943	200	180	96861653	96796255
	4	160	160	315M	MMG-G, EFF1 & EFF2	60	85	250	96848944	96789274	96809943	225	180	96861654	96796259
	4	-	200	315L	Siemens, MMG-E	60	80	250	96848943	96789274	96809943	200	180	96861653	96796255
	4	-	200	315M	MMG-G, EFF1 & EFF2	60	85	250	96848944	96789274	96809943	225	180	96861654	96796259
	4	-	250	355M	MMG-E	60	95	250	96848945	96789274	96809943	225	180	96861656	96796259
	4	-	250	315C	MMG-G, EFF 1	60	95	250	96848945	96789274	96809943	225	180	96861656	96796259
	4	-	250	355M	MMG-G, EFF 2	60	95	250	96848945	96789274	96809943	225	180	96861656	96796259
	4	-	288	315L	Siemens	60	85	250	96848944	96789274	96809943	225	180	96861654	96796259
	4	-	315	355L	MMG-E	60	95	250	96848945	96789274	96809943	250	180	96861657	96796260
	4	-	315	315D	MMG-G, EFF 1	60	95	250	96848945	96789274	96809943	250	180	96861657	96796260
	4	-	315	355L	MMG-G, EFF 2	60	95	250	96848945	96789274	96809943	250	180	96861657	96796260

Pump type	Motor data					Shaft dia.		Grundfos standard coupling				Flender spacer coupling			
	Pole	Power [kW]		Frame size	Make	Pump	Motor	Coupling diameter	Coupling complete	Rubber	Bolts	Coupling diameter	Spacer length	Coupling complete	Rubber
		50 Hz	60 Hz			[mm]	[mm]	[mm]				[mm]	[mm]		
	4	-	362	315L	Siemens	60	85	250	96848944	96789274	96809943	250	180	96861655	96796260
	6	18.5	-	200LA	Siemens	60	55	200	96848938	96789269	96809942	140	180	96861646	96480019
	6	22	-	200LB	Siemens	60	55	200	96848938	96789269	96809942	140	180	96861646	96480019
	6	30	-	225M	Siemens	60	60	224	96848939	96789269	96809942	140	180	96861647	96480019
	6	37	37	250M	Siemens	60	65	224	96848940	96789269	96809942	160	180	96861648	96480040
	6	37	37	250S	MMG-G, EFF1 & EFF2	60	70	250	96848941	96789274	96809943	180	180	96861650	96796254
	6	45	45	280S	Siemens, MMG-E	60	75	250	96848942	96789274	96809943	180	180	96861651	96796254
	6	45	45	250M	MMG-G, EFF1 & EFF2	60	70	250	96848941	96789274	96809943	180	180	96861650	96796254
	6	55	55	280M	Siemens, MMG-E	60	75	250	96848942	96789274	96809943	180	180	96861651	96796254
	6	55	55	280S	MMG-G, EFF1 & EFF2	60	80	250	96848943	96789274	96809943	200	180	96861653	96796255
	6	-	75	315S	Siemens, MMG-E	60	80	250	96848943	96789274	96809943	200	180	96861653	96796255
	6	-	75	280M	MMG-G, EFF1 & EFF2	60	80	250	96848943	96789274	96809943	200	180	96861653	96796255
	6	-	90	315M	Siemens, MMG-E	60	80	250	96848943	96789274	96809943	200	180	96861653	96796255
	6	-	90	315S	MMG-G, EFF1 & EFF2	60	85	250	96848944	96789274	96809943	225	180	96861654	96796259
150- 200	2	75	-	280S	All	32	65	224	96848910	96789269	96809942	160	140	96579806	96480040
	2	90	-	280M	All	32	65	224	96848910	96789269	96809942	160	140	96579806	96480040
	2	110	110	315S	All	32	65	224	96848910	96789269	96809942	160	140	96579806	96480040
	2	-	132	315M	All	32	65	224	96848910	96789269	96809942	160	140	96579806	96480040
	2	-	160	315L	All	32	65	224	96848910	96789269	96809942	160	140	96579806	96480040
	2	-	200	315L	All	32	65	224	96848910	96789269	96809942	160	140	96579806	96480040
	4	7.5	-	132M	All	32	38	160	96848905	96789247	96809941	95	140	96579800	96480016
	4	11	-	160M	All	32	42	180	96848906	96789247	96809941	95	140	96579802	96480016
	4	15	15	160L	All	32	42	180	96848906	96789247	96809941	95	140	96579802	96480016
	4	-	18.5	180M	All	32	48	200	96848907	96789269	96809942	110	140	96579803	96480017
	4	-	22	180L	All	32	48	200	96848907	96789269	96809942	110	140	96579803	96480017
	6	2.2	-	112M	All	32	28	140	96848904	96789247	96809940	80	140	96579788	96480015
	6	3	-	132SA	All	32	38	160	96848905	96789247	96809941	95	140	96579800	96480016
	6	4	4	132MA	All	32	38	160	96848905	96789247	96809941	95	140	96579800	96480016
	6	-	5.5	132MB	All	32	38	160	96848905	96789247	96809941	95	140	96579800	96480016
	6	-	7.5	160M	All	32	42	180	96848906	96789247	96809941	95	140	96579802	96480016

Pump type	Motor data					Shaft dia.		Grundfos standard coupling				Flender spacer coupling			
	Pole	Power [kW]		Frame size	Make	Pump	Motor	Coupling diameter	Coupling complete	Rubber	Bolts	Coupling diameter	Spacer length	Coupling complete	Rubber
		50 Hz	60 Hz			[mm]	[mm]	[mm]				[mm]	[mm]		
150- 250	2	132	-	315M	All	42	65	224	96848919	96789269	96809942	160	140	96861617	96480040
	2	160	-	315L	All	42	65	224	96848919	96789269	96809942	160	140	96861617	96480040
	2	200	-	315L	All	42	65	224	96848919	96789269	96809942	180	140	96861618	96796254
	2	250	-	315L	Siemens	42	65	224	96848919	96789269	96809942	180	140	96861618	96796254
	2	250	-	355	MMG-E	42	75	250	96848921	96789274	96809943	180	140	96861623	96796254
	2	250	-	315	MMG-G, EFF1	42	70	250	96848920	96789274	96809943	180	140	96861620	96796254
	2	250	-	355	MMG-G, EFF2	42	75	250	96848921	96789274	96809943	180	140	96861623	96796254
	4	15	-	160L	All	42	42	180	96848915	96789247	96809941	95	140	96861609	96480016
	4	18.5	-	180M	All	42	48	200	96848916	96789269	96809942	110	140	96861611	96480017
	4	22	-	180L	All	42	48	200	96848916	96789269	96809942	110	140	96861611	96480017
	4	30	30	200L	All	42	55	200	96848917	96789269	96809942	125	140	96861613	96480018
	4	37	37	225S	All	42	60	224	96848918	96789269	96809942	140	140	96861615	96480019
	4	45	45	225M	All	42	60	224	96848918	96789269	96809942	140	140	96861615	96480019
	4	-	55	250M	Siemens, MMG-E	42	65	224	96848919	96789269	96809942	160	140	96861617	96480040
	4	-	55	250SC	MMG-G, EFF1 & EFF2	42	70	250	96848920	96789274	96809943	180	140	96861620	96796254
	4	-	75	280S	Siemens, MMG-E	42	75	250	96848921	96789274	96809943	180	140	96861623	96796254
	4	-	75	250MC	MMG-G, EFF1 & EFF2	42	70	250	96848920	96789274	96809943	180	140	96861620	96796254
	6	5.5	-	132MB	All	42	38	160	96848914	96789247	96809941	95	140	96861607	96480016
	6	7.5	-	160M	All	42	42	180	96848915	96789247	96809941	95	140	96861609	96480016
	6	11	11	160L	All	42	42	180	96848915	96789247	96809941	95	140	96861609	96480016
	6	-	15	180L	All	42	48	200	96848916	96789269	96809942	110	140	96861611	96480017
	6	-	18.5	200LA	All	42	55	200	96848917	96789269	96809942	125	140	96861613	96480018
150- 315.1	2	200	-	315L	All	42	65	224	96848919	96789269	96809942	180	140	96861618	96796254
	2	160	-	315L	All	42	65	224	96848919	96789269	96809942	160	140	96861617	96480040
150- 315.2	2	200	-	315L	All	42	65	224	96848919	96789269	96809942	180	140	96861618	96796254
	2	160	-	315L	All	42	65	224	96848919	96789269	96809942	160	140	96861617	96480040
150- 315	4	37	-	225S	All	42	60	224	96848918	96789269	96809942	140	140	96861615	96480019
	4	45	-	225M	All	42	60	224	96848918	96789269	96809942	140	140	96861615	96480019
	4	55	55	250M	Siemens, MMG-E	42	65	224	96848919	96789269	96809942	160	140	96861617	96480040
	4	55	55	250SC	MMG-G, EFF1 & EFF2	42	70	250	96848920	96789274	96809943	180	140	96861620	96796254
	4	75	75	280S	Siemens, MMG-E	42	75	250	96848921	96789274	96809943	180	140	96861623	96796254
	4	75	75	250MC	MMG-G, EFF1 & EFF2	42	70	250	96848920	96789274	96809943	180	140	96861620	96796254
	4	90	90	280M	Siemens, MMG-E	42	75	250	96848921	96789274	96809943	180	140	96861623	96796254
	4	90	90	280S	MMG-G, EFF1 & EFF2	42	80	250	96848922	96789274	96809943	200	140	96861626	96796255
	4	-	110	315S	Siemens, MMG-E	42	80	250	96848922	96789274	96809943	200	140	96861626	96796255
	4	-	110	280M	MMG-G, EFF1 & EFF2	42	80	250	96848922	96789274	96809943	200	140	96861626	96796255
	4	-	132	315M	Siemens, MMG-E	42	80	250	96848922	96789274	96809943	200	140	96861626	96796255
	4	-	132	315S	MMG-G, EFF1 & EFF2	42	85	250	96848923	96789274	96809943	200	140	96861628	96796255

Pump type	Motor data					Shaft dia.		Grundfos standard coupling				Flender spacer coupling			
	Pole	Power [kW]		Frame size	Make	Pump	Motor	Coupling diameter	Coupling complete	Rubber	Bolts	Coupling diameter	Spacer length	Coupling complete	Rubber
		50 Hz	60 Hz			[mm]	[mm]	[mm]				[mm]	[mm]		
150-315.1	4	-	75	280S	Siemens, MMG-E	42	75	250	96848921	96789274	96809943	180	140	96861623	96796254
	4	-	75	280S	MMG-G, EFF1 & EFF2	42	75	250	96848920	96789274	96809943	180	140	96861620	96796254
	4	-	55	250M	Siemens, MMG-E	42	65	224	96848919	96789269	96809942	160	140	96861617	96480040
	4	-	55	250M	MMG-G, EFF1 & EFF2	42	65	250	96848920	96789274	96809943	180	140	96861620	96796254
	4	45	45	225M	All	42	60	224	96848918	96789269	96809942	140	140	96861615	96480019
	4	37	37	225S	All	42	60	224	96848918	96789269	96809942	140	140	96861615	96480019
	4	30	30	200L	All	42	55	200	96848917	96789269	96809942	125	140	96861613	96480018
	4	22	-	180L	All	42	48	200	96848916	96789269	96809942	110	140	96861611	96480017
	4	18.5	-	180M	All	42	48	200	96848916	96789269	96809942	110	140	96861611	96480017
150-315.2	4	-	75	280S	Siemens, MMG-E	42	75	250	96848921	96789274	96809943	180	140	96861623	96796254
	4	-	75	280S	MMG-G, EFF1 & EFF2	42	75	250	96848920	96789274	96809943	180	140	96861620	96796254
	4	-	55	250M	Siemens, MMG-E	42	65	224	96848919	96789269	96809942	160	140	96861617	96480040
	4	-	55	250M	MMG-G, EFF1 & EFF2	42	65	250	96848920	96789274	96809943	180	140	96861620	96796254
	4	45	45	225M	All	42	60	224	96848918	96789269	96809942	140	140	96861615	96480019
	4	37	37	225S	All	42	60	224	96848918	96789269	96809942	140	140	96861615	96480019
	4	30	30	200L	All	42	55	200	96848917	96789269	96809942	125	140	96861613	96480018
	4	22	-	180L	All	42	48	200	96848916	96789269	96809942	110	140	96861611	96480017
150-315	6	11	-	160L	All	42	42	180	96848915	96789247	96809941	95	140	96861609	96480016
	6	15	-	180L	All	42	48	200	96848916	96789269	96809942	110	140	96861611	96480017
	6	18.5	18.5	200LA	All	42	55	200	96848917	96789269	96809942	125	140	96861613	96480018
	6	22	22	200LB	All	42	55	200	96848917	96789269	96809942	125	140	96861613	96480018
	6	30	30	225M	All	42	60	224	96848918	96789269	96809942	140	140	96861615	96480019
	6	-	37	250M	Siemens	42	65	224	96848919	96789269	96809942	160	140	96861617	96480040
	6	-	37	250S	MMG-G, EFF1 & EFF2	42	70	250	96848920	96789274	96809943	180	140	96861620	96796254
150-315.1	6	-	22	200L	All	42	55	200	96848917	96789269	96809942	125	140	96861613	96480018
	6	-	18.5	200L	All	42	55	200	96848917	96789269	96809942	125	140	96861613	96480018
	6	15	15	180L	All	42	48	200	96848916	96789269	96809942	110	140	96861611	96480017
	6	11	11	160L	All	42	42	180	96848915	96789247	96809941	95	140	96861609	96480016
	6	7.5	7.5	160M	All	42	42	180	96848915	96789247	96809941	95	140	96861609	96480016
	6	5.5	-	132M	All	42	38	160	96848914	96789247	96809941	95	140	96861607	96480016
150-315.2	6	-	18.5	200L	All	42	55	200	96848917	96789269	96809942	125	140	96861613	96480018
	6	15	15	180L	All	42	48	200	96848916	96789269	96809942	110	140	96861611	96480017
	6	11	11	160L	All	42	42	180	96848915	96789247	96809941	95	140	96861609	96480016
	6	7.5	7.5	160M	All	42	42	180	96848915	96789247	96809941	95	140	96861609	96480016
150-400	4	55	-	250M	Siemens, MMG-E	42	65	224	96848919	96789269	96809942	160	140	96861617	96480040
	4	55	-	250SC	MMG-G, EFF1 & EFF2	42	70	250	96848920	96789274	96809943	180	140	96861620	96796254
	4	75	-	280S	Siemens, MMG-E	42	75	250	96848921	96789274	96809943	180	140	96861623	96796254
	4	75	-	250MC	MMG-G, EFF1 & EFF2	42	70	250	96848920	96789274	96809943	180	140	96861620	96796254
	4	90	90	280M	Siemens, MMG-E	42	75	250	96848921	96789274	96809943	180	140	96861623	96796254
	4	90	90	280S	MMG-G, EFF1 & EFF2	42	80	250	96848922	96789274	96809943	200	140	96861626	96796255
	4	110	110	315S	Siemens, MMG-E	42	80	250	96848922	96789274	96809943	200	140	96861626	96796255
	4	110	110	280M	MMG-G, EFF1 & EFF2	42	80	250	96848922	96789274	96809943	200	140	96861626	96796255
	4	132	0	315M	Siemens, MMG-E	48	80	250	96848933	96789274	96809943	200	180	96861640	96796255
	4	132	0	315S	MMG-G, EFF1 & EFF2	48	85	250	96848934	96789274	96809943	225	180	96861641	96796259

Pump type	Motor data					Shaft dia.		Grundfos standard coupling				Flender spacer coupling			
	Pole	Power [kW]		Frame size	Make	Pump	Motor	Coupling diameter	Coupling complete	Rubber	Bolts	Coupling diameter	Spacer length	Coupling complete	Rubber
		50 Hz	60 Hz			[mm]	[mm]	[mm]				[mm]	[mm]		
	4	0	132	315M	Siemens, MMG-E	42	80	250	*96848922*	*96789274*	*96809943*	200	140	*96861626*	*96796255*
	4	0	132	315S	MMG-G, EFF1 & EFF2	42	85	250	*96848923*	*96789274*	*96809943*	200	140	*96861628*	*96796255*
	4	160	0	315M	Siemens, MMG-E	48	80	250	*96848933*	*96789274*	*96809943*	200	180	*96861640*	*96796255*
	4	160	0	315M	MMG-G, EFF1 & EFF2	48	85	250	*96848934*	*96789274*	*96809943*	225	180	*96861641*	*96796259*
	4	0	160	315M	Siemens, MMG-E	42	80	250	*96848922*	*96789274*	*96809943*	200	140	*96861626*	*96796255*
	4	0	160	315M	MMG-G, EFF1 & EFF2	42	85	250	*96848923*	*96789274*	*96809943*	200	140	*96861628*	*96796255*
	4	-	200	315L	Siemens, MMG-E	48	80	250	*96848933*	*96789274*	*96809943*	200	180	*96861640*	*96796255*
	4	-	200	315M	MMG-G, EFF1 & EFF2	48	85	250	*96848934*	*96789274*	*96809943*	225	180	*96861641*	*96796259*
	4	-	250	355M	MMG-E	48	95	250	*96848935*	*96789274*	*96809943*	250	180	*96861643*	*96796260*
	4	-	250	315C	MMG-G, EFF 1	48	95	250	*96848935*	*96789274*	*96809943*	250	180	*96861643*	*96796260*
	4	-	250	355M	MMG-G, EFF 2	48	95	250	*96848935*	*96789274*	*96809943*	250	180	*96861643*	*96796260*
	4	-	288	315L	Siemens	48	85	250	*96848934*	*96789274*	*96809943*	225	180	*96861641*	*96796259*
	6	18.5	-	200LA	Siemens	42	55	200	*96848917*	*96789269*	*96809942*	125	140	*96861613*	*96480018*
	6	22	22	200LB	Siemens	42	55	200	*96848917*	*96789269*	*96809942*	125	140	*96861613*	*96480018*
	6	30	30	225M	Siemens	42	60	224	*96848918*	*96789269*	*96809942*	140	140	*96861615*	*96480019*
	6	37	37	250M	Siemens	42	65	224	*96848919*	*96789269*	*96809942*	160	140	*96861617*	*96480040*
	6	37	37	250S	MMG-G, EFF1 & EFF2	42	70	250	*96848920*	*96789274*	*96809943*	180	140	*96861620*	*96796254*
	6	45	45	280S	Siemens, MMG-E	42	75	250	*96848921*	*96789274*	*96809943*	180	140	*96861623*	*96796254*
	6	45	45	250M	MMG-G, EFF1 & EFF2	42	70	250	*96848920*	*96789274*	*96809943*	180	140	*96861620*	*96796254*
	6	-	55	280M	Siemens, MMG-E	42	75	250	*96848921*	*96789274*	*96809943*	180	140	*96861623*	*96796254*
	6	-	55	280S	MMG-G, EFF1 & EFF2	42	80	250	*96848922*	*96789274*	*96809943*	200	140	*96861626*	*96796255*
	6	-	75	315S	Siemens, MMG-E	42	80	250	*96848922*	*96789274*	*96809943*	200	140	*96861626*	*96796255*
	6	-	75	280M	MMG-G, EFF1 & EFF2	42	80	250	*96848922*	*96789274*	*96809943*	200	140	*96861626*	*96796255*

Pump type	Motor data					Shaft dia.		Grundfos standard coupling				Flender spacer coupling			
	Pole	Power [kW]		Frame size	Make	Pump	Motor	Coupling diameter	Coupling complete	Rubber	Bolts	Coupling diameter	Spacer length	Coupling complete	Rubber
		50 Hz	60 Hz			[mm]	[mm]	[mm]				[mm]	[mm]		
150- 500	4	132	-	315M	Siemens, MMG-E	60	80	250	*96848943*	*96789274*	*96809943*	200	180	*96861653*	*96796255*
	4	132	-	315S	MMG-G, EFF1 & EFF2	60	85	250	*96848944*	*96789274*	*96809943*	225	180	*96861654*	*96796259*
	4	160	-	315M	Siemens, MMG-E	60	80	250	*96848943*	*96789274*	*96809943*	200	180	*96861653*	*96796255*
	4	160	-	315M	MMG-G, EFF1 & EFF2	60	85	250	*96848944*	*96789274*	*96809943*	225	180	*96861654*	*96796259*
	4	200	-	315L	Siemens, MMG-E	60	80	250	*96848943*	*96789274*	*96809943*	200	180	*96861653*	*96796255*
	4	200	-	315M	MMG-G, EFF1 & EFF2	60	85	250	*96848944*	*96789274*	*96809943*	225	180	*96861654*	*96796259*
	6	37	-	250M	Siemens	60	65	224	*96848940*	*96789269*	*96809942*	160	180	*96861648*	*96480040*
	6	37	-	250S	MMG-G, EFF1 & EFF2	60	70	250	*96848941*	*96789274*	*96809943*	180	180	*96861650*	*96796254*
	6	45	-	280S	Siemens, MMG-E	60	75	250	*96848942*	*96789274*	*96809943*	180	180	*96861651*	*96796254*
	6	45	-	250M	MMG-G, EFF1 & EFF2	60	70	250	*96848941*	*96789274*	*96809943*	180	180	*96861650*	*96796254*
	6	55	55	280M	Siemens, MMG-E	60	75	250	*96848942*	*96789274*	*96809943*	180	180	*96861651*	*96796254*
	6	55	55	280S	MMG-G, EFF1 & EFF2	60	80	250	*96848943*	*96789274*	*96809943*	200	180	*96861653*	*96796255*
	6	75	75	315S	Siemens, MMG-E	60	80	250	*96848943*	*96789274*	*96809943*	200	180	*96861653*	*96796255*
	6	75	75	280M	MMG-G, EFF1 & EFF2	60	80	250	*96848943*	*96789274*	*96809943*	200	180	*96861653*	*96796255*
	6	-	90	315M	Siemens, MMG-E	60	80	250	*96848943*	*96789274*	*96809943*	200	180	*96861653*	*96796255*
	6	-	90	315S	MMG-G, EFF1 & EFF2	60	85	250	*96848944*	*96789274*	*96809943*	225	180	*96861654*	*96796259*
	6	-	110	315M	Siemens	60	80	250	*96848943*	*96789274*	*96809943*	200	180	*96861653*	*96796255*
	6	-	110	315L	MMG-E	60	80	250	*96848943*	*96789274*	*96809943*	200	180	*96861653*	*96796255*
	6	-	110	315M	MMG-G, EFF1 & EFF2	60	85	250	*96848944*	*96789274*	*96809943*	225	180	*96861654*	*96796259*
	6	-	132	315L	Siemens, MMG-E	60	80	250	*96848943*	*96789274*	*96809943*	200	180	*96861653*	*96796255*
	6	-	132	315M	MMG-G, EFF1 & EFF2	60	85	250	*96848944*	*96789274*	*96809943*	225	180	*96861654*	*96796259*

Pump type	Motor data					Shaft dia.		Grundfos standard coupling				Flender spacer coupling			
	Pole	Power [kW]		Frame size	Make	Pump	Motor	Coupling diameter	Coupling complete	Rubber	Bolts	Coupling diameter	Spacer length	Coupling complete	Rubber
		50 Hz	60 Hz			[mm]	[mm]	[mm]				[mm]	[mm]		
200- 400	4	37	-	225S	All	48	60	224	96848929	96789269	96809942	140	180	96861633	96480019
	4	45	-	225M	All	48	60	224	96848929	96789269	96809942	140	180	96861633	96480019
	4	55	55	250M	Siemens, MMG-E	48	65	224	96848930	96789269	96809942	160	180	96861634	96480040
	4	55	55	250SC	MMG-G, EFF1 & EFF2	48	70	250	96848931	96789274	96809943	180	180	96861636	96796254
	4	75	75	280S	Siemens, MMG-E	48	75	250	96848932	96789274	96809943	180	180	96861638	96796254
	4	75	75	250MC	MMG-G, EFF1 & EFF2	48	70	250	96848931	96789274	96809943	180	180	96861636	96796254
	4	90	90	280M	Siemens, MMG-E	48	75	250	96848932	96789274	96809943	180	180	96861638	96796254
	4	90	90	280S	MMG-G, EFF1 & EFF2	48	80	250	96848933	96789274	96809943	200	180	96861640	96796255
	4	110	110	315S	Siemens, MMG-E	48	80	250	96848933	96789274	96809943	200	180	96861640	96796255
	4	110	110	280M	MMG-G, EFF1 & EFF2	48	80	250	96848933	96789274	96809943	200	180	96861640	96796255
	4	132	132	315M	Siemens, MMG-E	48	80	250	96848933	96789274	96809943	200	180	96861640	96796255
	4	132	132	315S	MMG-G, EFF1 & EFF2	48	85	250	96848934	96789274	96809943	225	180	96861641	96796259
	4	-	160	315M	Siemens, MMG-E	48	80	250	96848933	96789274	96809943	200	180	96861640	96796255
	4	-	160	315M	MMG-G, EFF1 & EFF2	48	85	250	96848934	96789274	96809943	225	180	96861641	96796259
	4	-	200	315L	Siemens, MMG-E	48	80	250	96848933	96789274	96809943	200	180	96861640	96796255
	4	-	200	315M	MMG-G, EFF1 & EFF2	48	85	250	96848934	96789274	96809943	225	180	96861641	96796259
	6	15	-	180L	All	48	48	200	96848927	96789269	96809942	110	180	96861631	96480017
	6	18.5	-	200L	All	48	55	200	96848928	96789269	96809942	125	180	96861632	96480018
	6	22	22	200L	All	48	55	200	96848928	96789269	96809942	125	180	96861632	96480018
	6	30	30	225M	All	48	60	224	96848929	96789269	96809942	140	180	96861633	96480019
	6	37	37	250M	Siemens, MMG-E	48	65	224	96848930	96789269	96809942	160	180	96861634	96480040
	6	37	37	250S	MMG-G, EFF1 & EFF2	48	70	250	96848931	96789274	96809943	180	180	96861636	96796254
	6	-	45	280S	Siemens, MMG-E	48	75	250	96848932	96789274	96809943	180	180	96861638	96796254
	6	-	45	250M	MMG-G, EFF1 & EFF2	48	70	250	96848931	96789274	96809943	180	180	96861636	96796254
	6	-	55	280M	Siemens, MMG-E	48	75	250	96848932	96789274	96809943	180	180	96861638	96796254
	6	-	55	280S	MMG-G, EFF1 & EFF2	48	80	250	96848933	96789274	96809943	200	180	96861640	96796255

Pump type	Motor data					Shaft dia.		Grundfos standard coupling				Flender spacer coupling			
	Pole	Power [kW]		Frame size	Make	Pump	Motor	Coupling diameter	Coupling complete	Rubber	Bolts	Coupling diameter	Spacer length	Coupling complete	Rubber
		50 Hz	60 Hz			[mm]	[mm]	[mm]				[mm]	[mm]		
200- 450	4	75	75	280S	Siemens, MMG-E	48	75	250	96848932	96789274	96809943	180	180	96861638	96796254
	4	75	75	250MC	MMG-G, EFF1 & EFF2	48	70	250	96848931	96789274	96809943	180	180	96861636	96796254
	4	90	90	280M	Siemens, MMG-E	48	75	250	96848932	96789274	96809943	180	180	96861638	96796254
	4	90	90	280S	MMG-G, EFF1 & EFF2	48	80	250	96848933	96789274	96809943	200	180	96861640	96796255
	4	110	110	315S	Siemens, MMG-E	48	80	250	96848933	96789274	96809943	200	180	96861640	96796255
	4	110	110	280M	MMG-G, EFF1 & EFF2	48	80	250	96848933	96789274	96809943	200	180	96861640	96796255
	4	132	132	315M	Siemens, MMG-E	48	80	250	96848933	96789274	96809943	200	180	96861640	96796255
	4	132	132	315S	MMG-G, EFF1 & EFF2	48	85	250	96848934	96789274	96809943	225	180	96861641	96796259
	4	160	160	315M	Siemens, MMG-E	48	80	250	96848933	96789274	96809943	200	180	96861640	96796255
	4	160	160	315M	MMG-G, EFF1 & EFF2	48	85	250	96848934	96789274	96809943	225	180	96861641	96796259
	4	-	200	315L	Siemens, MMG-E	48	80	250	96848933	96789274	96809943	200	180	96861640	96796255
	4	-	200	315M	MMG-G, EFF1 & EFF2	48	85	250	96848934	96789274	96809943	225	180	96861641	96796259
	4	-	288	315L	Siemens	48	85	250	96848934	96789274	96809943	225	180	96861641	96796259
	4	-	250	355M	MMG-E	48	95	250	96848935	96789274	96809943	250	180	96861643	96796260
	4	-	250	315C	MMG-G, EFF1	48	95	250	96848935	96789274	96809943	250	180	96861643	96796260
	4	-	250	355M	MMG-G, EFF2	48	95	250	96848935	96789274	96809943	250	180	96861643	96796260
	6	18.5	-	200L	All	48	55	200	96848928	96789269	96809942	125	180	96861632	96480018
	6	22	-	200L	All	48	55	200	96848928	96789269	96809942	125	180	96861632	96480018
	6	30	-	225M	All	48	60	224	96848929	96789269	96809942	140	180	96861633	96480019
	6	37	37	250M	Siemens, MMG-E	48	65	224	96848930	96789269	96809942	160	180	96861634	96480040
	6	37	37	250S	MMG-G, EFF1 & EFF2	48	70	250	96848931	96789274	96809943	180	180	96861636	96796254
	6	45	45	280S	Siemens, MMG-E	48	75	250	96848932	96789274	96809943	180	180	96861638	96796254
	6	45	45	250M	MMG-G, EFF1 & EFF2	48	70	250	96848931	96789274	96809943	180	180	96861636	96796254
	6	-	55	280M	Siemens, MMG-E	48	75	250	96848932	96789274	96809943	180	180	96861638	96796254
	6	-	55	280S	MMG-G, EFF1 & EFF2	48	80	250	96848933	96789274	96809943	200	180	96861640	96796255
	6	-	75	315S	Siemens, MMG-E	48	80	250	96848933	96789274	96809943	200	180	96861640	96796255
	6	-	75	280M	MMG-G, EFF1 & EFF2	48	80	250	96848933	96789274	96809943	200	180	96861640	96796255
	6	-	90	315M	Siemens, MMG-E	48	80	250	96848933	96789274	96809943	200	180	96861640	96796255
	6	-	90	315S	MMG-G, EFF1 & EFF2	48	85	250	96848934	96789274	96809943	225	180	96861641	96796259

Pump type	Motor data					Shaft dia.		Grundfos standard coupling				Flender spacer coupling			
	Pole	Power [kW]		Frame size	Make	Pump	Motor	Coupling diameter	Coupling complete	Rubber	Bolts	Coupling diameter	Spacer length	Coupling complete	Rubber
		50 Hz	60 Hz			[mm]	[mm]	[mm]				[mm]	[mm]		
250- 350	4	37	-	225S	All	48	60	224	96848929	96789269	96809942	140	180	96861633	96480019
	4	45	-	225M	All	48	60	224	96848929	96789269	96809942	140	180	96861633	96480019
	4	55	-	250M	Siemens, MMG-E	48	65	224	96848930	96789269	96809942	160	180	96861634	96480040
	4	55	-	250SC	MMG-G, EFF1 & EFF2	48	70	250	96848931	96789274	96809943	180	180	96861636	96796254
	4	75	75	280S	Siemens, MMG-E	48	75	250	96848932	96789274	96809943	180	180	96861638	96796254
	4	75	75	250MC	MMG-G, EFF1 & EFF2	48	70	250	96848931	96789274	96809943	180	180	96861636	96796254
	4	90	90	280M	Siemens, MMG-E	48	75	250	96848932	96789274	96809943	180	180	96861638	96796254
	4	90	90	280S	MMG-G, EFF1 & EFF2	48	80	250	96848933	96789274	96809943	200	180	96861640	96796255
	4	-	110	315S	Siemens, MMG-E	48	80	250	96848933	96789274	96809943	200	180	96861640	96796255
	4	-	110	280M	MMG-G, EFF1 & EFF2	48	80	250	96848933	96789274	96809943	200	180	96861640	96796255
	4	-	132	315M	Siemens, MMG-E	48	80	250	96848933	96789274	96809943	200	180	96861640	96796255
	4	-	132	315S	MMG-G, EFF1 & EFF2	48	85	250	96848934	96789274	96809943	225	180	96861641	96796259
	6	11	-	160L	All	48	42	0	0	0	0	0	180	0	0
	6	15	-	180L	All	48	48	200	96848927	96789269	96809942	110	180	96861631	96480017
	6	18.5	-	200L	All	48	55	200	96848928	96789269	96809942	125	180	96861632	96480018
	6	22	22	200L	All	48	55	200	96848928	96789269	96809942	125	180	96861632	96480018
	6	-	30	225M	All	48	60	224	96848929	96789269	96809942	140	180	96861633	96480019
	6	-	37	250M	Siemens, MMG-E	48	65	224	96848930	96789269	96809942	160	180	96861634	96480040
	6	-	37	250S	MMG-G, EFF1 & EFF2	48	70	250	96848931	96789274	96809943	180	180	96861636	96796254
	6	-	45	280S	Siemens, MMG-E	48	75	250	96848932	96789274	96809943	180	180	96861638	96796254
	6	-	45	250M	MMG-G, EFF1 & EFF2	48	70	250	96848931	96789274	96809943	180	180	96861636	96796254
250- 400	4	45	-	225M	All	48	60	224	96848929	96789269	96809942	140	180	96861633	96480019
	4	55	-	250M	Siemens, MMG-E	48	65	224	96848930	96789269	96809942	160	180	96861634	96480040
	4	55	-	250SC	MMG-G, EFF1 & EFF2	48	70	250	96848931	96789274	96809943	180	180	96861636	96796254
	4	75	75	280S	Siemens, MMG-E	48	75	250	96848932	96789274	96809943	180	180	96861638	96796254
	4	75	75	250MC	MMG-G, EFF1 & EFF2	48	70	250	96848931	96789274	96809943	180	180	96861636	96796254
	4	90	90	280M	Siemens, MMG-E	48	75	250	96848932	96789274	96809943	180	180	96861638	96796254
	4	90	90	280S	MMG-G, EFF1 & EFF2	48	80	250	96848933	96789274	96809943	200	180	96861640	96796255
	4	110	110	315S	Siemens, MMG-E	48	80	250	96848933	96789274	96809943	200	180	96861640	96796255
	4	110	110	280M	MMG-G, EFF1 & EFF2	48	80	250	96848933	96789274	96809943	200	180	96861640	96796255
	4	132	132	315M	Siemens, MMG-E	48	80	250	96848933	96789274	96809943	200	180	96861640	96796255
	4	132	132	315S	MMG-G, EFF1 & EFF2	48	85	250	96848934	96789274	96809943	225	180	96861641	96796259
	4	160	160	315M	Siemens, MMG-E	48	80	250	96848933	96789274	96809943	200	180	96861640	96796255
	4	160	160	315M	MMG-G, EFF1 & EFF2	48	85	250	96848934	96789274	96809943	225	180	96861641	96796259
	4	-	200	315L	Siemens, MMG-E	48	80	250	96848933	96789274	96809943	200	180	96861640	96796255
	4	-	200	315M	MMG-G, EFF1 & EFF2	48	85	250	96848934	96789274	96809943	225	180	96861641	96796259
	4	-	288	315L	Siemens	48	85	250	96848934	96789274	96809943	225	180	96861641	96796259
	4	-	250	355M	MMG-E	48	95	250	96848935	96789274	96809943	250	180	96861643	96796260
	4	-	250	315C	MMG-G, EFF1	48	95	250	96848935	96789274	96809943	250	180	96861643	96796260
	4	-	250	355M	MMG-G, EFF2	48	95	250	96848935	96789274	96809943	250	180	96861643	96796260
	6	15	-	180L	All	48	48	200	96848927	96789269	96809942	110	180	96861631	96480017
	6	18.5	-	200L	All	48	55	200	96848928	96789269	96809942	125	180	96861632	96480018

Pump type	Motor data					Shaft dia.		Grundfos standard coupling				Flender spacer coupling			
	Pole	Power [kW]		Frame size	Make	Pump	Motor	Coupling diameter	Coupling complete	Rubber	Bolts	Coupling diameter	Spacer length	Coupling complete	Rubber
		50 Hz	60 Hz			[mm]	[mm]	[mm]				[mm]	[mm]		
	6	22	-	200L	All	48	55	200	96848928	96789269	96809942	125	180	96861632	96480018
	6	30	-	225M	All	48	60	224	96848929	96789269	96809942	140	180	96861633	96480019
	6	37	37	250M	Siemens, MMG-E	48	65	224	96848930	96789269	96809942	160	180	96861634	96480040
	6	37	37	250S	MMG-G, EFF1 & EFF2	48	70	250	96848931	96789274	96809943	180	180	96861636	96796254
	6	45	45	280S	Siemens, MMG-E	48	75	250	96848932	96789274	96809943	180	180	96861638	96796254
	6	45	45	250M	MMG-G, EFF1 & EFF2	48	70	250	96848931	96789274	96809943	180	180	96861636	96796254
	6	-	55	280M	Siemens, MMG-E	48	75	250	96848932	96789274	96809943	180	180	96861638	96796254
	6	-	55	280S	MMG-G, EFF1 & EFF2	48	80	250	96848933	96789274	96809943	200	180	96861640	96796255
	6	-	75	315S	Siemens, MMG-E	48	80	250	96848933	96789274	96809943	200	180	96861640	96796255
	6	-	75	280M	MMG-G, EFF1 & EFF2	48	80	250	96848933	96789274	96809943	200	180	96861640	96796255
	6	-	90	315M	Siemens, MMG-E	48	80	250	96848933	96789274	96809943	200	180	96861640	96796255
	6	-	90	315S	MMG-G, EFF1 & EFF2	48	85	250	96848934	96789274	96809943	225	180	96861641	96796259
	4	75	-	280S	Siemens, MMG-E	60	75	250	96848942	96789274	96809943	180	180	96861651	96796254
	4	75	-	250M	MMG-G, EFF1 & EFF2	60	70	250	96848941	96789274	96809943	180	180	96861650	96796254
	4	90	-	280M	Siemens, MMG-E	60	75	250	96848942	96789274	96809943	180	180	96861651	96796254
	4	90	-	280S	MMG-G, EFF1 & EFF2	60	80	250	96848943	96789274	96809943	200	180	96861653	96796255
	4	110	110	315S	Siemens, MMG-E	60	80	250	96848943	96789274	96809943	200	180	96861653	96796255
	4	110	110	280M	MMG-G, EFF1 & EFF2	60	80	250	96848943	96789274	96809943	200	180	96861653	96796255
	4	132	132	315M	Siemens, MMG-E	60	80	250	96848943	96789274	96809943	200	180	96861653	96796255
	4	132	132	315S	MMG-G, EFF1 & EFF2	60	85	250	96848944	96789274	96809943	225	180	96861654	96796259
	4	160	160	315M	Siemens, MMG-E	60	80	250	96848943	96789274	96809943	200	180	96861653	96796255
	4	160	160	315M	MMG-G, EFF1 & EFF2	60	85	250	96848944	96789274	96809943	225	180	96861654	96796259
	4	200	200	315L	Siemens, MMG-E	60	80	250	96848943	96789274	96809943	200	180	96861653	96796255
	4	200	200	315M	MMG-G, EFF1 & EFF2	60	85	250	96848944	96789274	96809943	225	180	96861654	96796259
	4	-	288	315L	Siemens	60	85	250	96848944	96789274	96809943	225	180	96861654	96796259
250- 450	4	-	250	355M	MMG-E	60	95	250	96848945	96789274	96809943	250	180	96861657	96796260
	4	-	250	315C	MMG-G, EFF1	60	95	250	96848945	96789274	96809943	250	180	96861657	96796260
	4	-	250	355M	MMG-G, EFF2	60	95	250	96848945	96789274	96809943	250	180	96861657	96796260
	4	-	362	315L	Siemens	60	85	250	96848944	96789274	96809943	225	180	96861654	96796259
	4	-	315	355L	MMG-E	60	95	250	96848945	96789274	96809943	250	180	96861657	96796260
	4	-	315	315D	MMG-G, EFF1	60	95	250	96848945	96789274	96809943	250	180	96861657	96796260
	4	-	315	355L	MMG-G, EFF2	60	95	250	96848945	96789274	96809943	250	180	96861657	96796260
	6	18.5	-	200L	All	60	55	200	96848938	96789269	96809942	140	180	96861646	96480019
	6	22	-	200L	All	60	55	200	96848938	96789269	96809942	140	180	96861646	96480019
	6	30	-	225M	All	60	60	224	96848939	96789269	96809942	140	180	96861647	96480019
	6	37	37	250M	Siemens, MMG-E	60	65	224	96848940	96789269	96809942	160	180	96861648	96480040
	6	37	37	250S	MMG-G, EFF1 & EFF2	60	70	250	96848941	96789274	96809943	180	180	96861650	96796254
	6	45	45	280S	Siemens, MMG-E	60	75	250	96848942	96789274	96809943	180	180	96861651	96796254
	6	45	45	250M	MMG-G, EFF1 & EFF2	60	70	250	96848941	96789274	96809943	180	180	96861650	96796254
	6	55	55	280M	Siemens, MMG-E	60	75	250	96848942	96789274	96809943	180	180	96861651	96796254
	6	55	55	280S	MMG-G, EFF1 & EFF2	60	80	250	96848943	96789274	96809943	200	180	96861653	96796255
	6	-	75	315S	Siemens, MMG-E	60	80	250	96848943	96789274	96809943	200	180	96861653	96796255

Pump type	Motor data					Shaft dia.		Grundfos standard coupling				Flender spacer coupling			
	Pole	Power [kW]		Frame size	Make	Pump	Motor	Coupling diameter	Coupling complete	Rubber	Bolts	Coupling diameter	Spacer length	Coupling complete	Rubber
		50 Hz	60 Hz			[mm]	[mm]	[mm]				[mm]	[mm]		
	6	-	75	280M	MMG-G, EFF1 & EFF2	60	80	250	96848943	96789274	96809943	200	180	96861653	96796255
	6	-	90	315M	Siemens, MMG-E	60	80	250	96848943	96789274	96809943	200	180	96861653	96796255
	6	-	90	315S	MMG-G, EFF1 & EFF2	60	85	250	96848944	96789274	96809943	225	180	96861654	96796259
	6	-	110	315M	Siemens	60	80	250	96848943	96789274	96809943	200	180	96861653	96796255
	6	-	110	315L	MMG-E	60	80	250	96848943	96789274	96809943	200	180	96861653	96796255
	6	-	110	315M	MMG-G, EFF1 & EFF2	60	85	250	96848944	96789274	96809943	225	180	96861654	96796259
	4	160	-	315M	Siemens, MMG-E	60	80	250	96848943	96789274	96809943	200	180	96861653	96796255
	4	160	-	315M	MMG-G, EFF1 & EFF2	60	85	250	96848944	96789274	96809943	225	180	96861654	96796259
	4	200	-	315L	Siemens, MMG-E	60	80	250	96848943	96789274	96809943	200	180	96861653	96796255
	4	200	-	315M	MMG-G, EFF1 & EFF2	60	85	250	96848944	96789274	96809943	225	180	96861654	96796259
	4	250	-	315L	Siemens	60	85	250	96848944	96789274	96809943	225	180	96861654	96796259
	4	250	-	355M	MMG-E	60	95	250	96848945	96789274	96809943	250	180	96861657	96796260
	4	250	-	315C	MMG-G, EFF1	60	95	250	96848945	96789274	96809943	250	180	96861657	96796260
	4	250	-	355M	MMG-G, EFF2	60	95	250	96848945	96789274	96809943	250	180	96861657	96796260
	4	315	-	315L	Siemens	60	85	250	96848944	96789274	96809943	225	180	96861654	96796259
	4	315	-	355L	MMG-E	60	95	250	96848945	96789274	96809943	250	180	96861657	96796260
	4	315	-	315D	MMG-G, EFF1	60	95	250	96848945	96789274	96809943	250	180	96861657	96796260
	4	315	-	355L	MMG-G, EFF2	60	95	250	96848945	96789274	96809943	250	180	96861657	96796260
	6	45	-	280S	Siemens, MMG-E	60	75	250	96848942	96789274	96809943	180	180	96861651	96796254
	6	45	-	250M	MMG-G, EFF1 & EFF2	60	70	250	96848941	96789274	96809943	180	180	96861650	96796254
250- 500	6	55	-	280M	Siemens, MMG-E	60	75	250	96848942	96789274	96809943	180	180	96861651	96796254
	6	55	-	280S	MMG-G, EFF1 & EFF2	60	80	250	96848943	96789274	96809943	200	180	96861653	96796255
	6	75	75	315S	Siemens, MMG-E	60	80	250	96848943	96789274	96809943	200	180	96861653	96796255
	6	75	75	280M	MMG-G, EFF1 & EFF2	60	80	250	96848943	96789274	96809943	200	180	96861653	96796255
	6	90	90	315M	Siemens, MMG-E	60	80	250	96848943	96789274	96809943	200	180	96861653	96796255
	6	90	90	315S	MMG-G, EFF1 & EFF2	60	85	250	96848943	96789274	96809943	200	180	96861653	96796255
	6	-	110	315M	Siemens	60	80	250	96848943	96789274	96809943	200	180	96861653	96796255
	6	-	110	315L	MMG-E	60	80	250	96848943	96789274	96809943	200	180	96861653	96796255
	6	-	110	315M	MMG-G, EFF1 & EFF2	60	85	250	96848944	96789274	96809943	225	180	96861654	96796259
	6	-	132	315L	Siemens, MMG-E	60	80	250	96848943	96789274	96809943	200	180	96861653	96796255
	6	-	132	315M	MMG-G, EFF1 & EFF2	60	85	250	96848944	96789274	96809943	225	180	96861654	96796259
	6	-	160	315L	Siemens	60	80	250	96848943	96789274	96809943	200	180	96861653	96796255
	6	-	160	355M	MMG-E	60	95	250	96848945	96789274	96809943	250	180	96861657	96796260
	6	-	160	315C	MMG-G, EFF1	60	95	250	96848945	96789274	96809943	250	180	96861657	96796260

Flender standard coupling

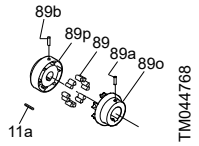

Flender standard coupling	
Coupling complete	**Rubber**
89a:1 x set screw 89b:1 x set screw 89:1 set of rubber parts 89o:1 x male part 89b:1 x female part 11a:1 x key	89: 1 set of rubber parts

Pump type	Motor data					Shaft diameter		Flender standard coupling	
	Pole	Power [kW]		Frame size	Make	Pump	Motor	Coupling complete	Rubber
		50 Hz	60 Hz			[mm]	[mm]		
32- 125	2	1.1	-	90S	All	24	24	*96579617*	*96480015*
	2	1.5	1.5	90S	All	24	24	*96579617*	*96480015*
	2	2.2	2.2	90L	All	24	24	*96579617*	*96480015*
	2	3	3	100L	All	24	28	*96579619*	*96480015*
	2	-	4	112M	All	24	28	*96579619*	*96480015*
	2	-	5.5	132S	All	24	38	*96579659*	*96480016*
	4	0.25	0.25	71A	All	24	14	*96579610*	*96480015*
	4	0.37	0.37	71B	All	24	14	*96579610*	*96480015*
	4	-	0.55	80A	All	24	19	*96579613*	*96480015*
	4	-	0.75	80B	All	24	19	*96579613*	*96480015*
32- 160	2	2.2	-	90L	All	24	24	*96579617*	*96480015*
	2	3	3	100L	All	24	28	*96579619*	*96480015*
	2	4	4	112M	All	24	28	*96579619*	*96480015*
	2	5.5	5.5	132S	All	24	38	*96579659*	*96480016*
	2	-	7.5	132S	All	24	38	*96579659*	*96480016*
	2	-	11	160M	All	24	42	*96579680*	*96480016*
	4	0.25	-	71A	All	24	14	*96579610*	*96480015*
	4	0.37	0.37	71B	All	24	14	*96579610*	*96480015*
	4	0.55	0.55	80A	All	24	19	*96579613*	*96480015*
	4	0.75	0.75	80B	All	24	19	*96579613*	*96480015*
	4	-	1.1	90S	All	24	24	*96579617*	*96480015*
32- 200	2	4	-	112M	All	24	28	*96579619*	*96480015*
	2	5.5	5.5	132S	All	24	38	*96579659*	*96480016*
	2	7.5	7.5	132S	All	24	38	*96579659*	*96480016*
	2	11	11	160M	All	24	42	*96579680*	*96480016*
	2	-	15	160M	All	24	42	*96579680*	*96480016*
	2	-	18.5	160L	All	24	42	*96579680*	*96480016*
	4	0.55	-	80A	All	24	19	*96579613*	*96480015*
	4	0.75	0.75	80B	All	24	19	*96579613*	*96480015*
	4	1.1	1.1	90S	All	24	24	*96579617*	*96480015*
	4	1.5	1.5	90L	All	24	24	*96579617*	*96480015*
	4	-	2.2	100L	All	24	28	*96579619*	*96480015*

Pump type	Motor data					Shaft diameter		Flender standard coupling	
	Pole	Power [kW]		Frame size	Make	Pump	Motor	Coupling complete	Rubber
		50 Hz	60 Hz			[mm]	[mm]		
32- 250	2	5.5	5.5	132S	All	24	38	-	-
	2	7.5	7.5	132S	All	24	38	-	-
	2	11	11	160M	All	24	42	-	-
	2	15	15	160M	All	24	42	-	-
	2	-	18.5	160L	All	24	42	-	-
	4	0.75	-	80B	All	24	19	-	-
	4	1.1	1.1	90S	All	24	24	-	-
	4	1.5	1.5	90L	All	24	24	-	-
	4	2.2	2.2	100L	All	24	28	-	-
32- 125.1	2	0.75	-	80A	All	24	19	96579613	96480015
	2	1.1	1.1	90S	All	24	24	96579617	96480015
	2	1.5	1.5	90S	All	24	24	96579617	96480015
	2	2.2	2.2	90L	All	24	24	96579617	96480015
	2	-	3	100L	All	24	28	96579619	96480015
	2	-	4	112M	All	24	28	96579619	96480015
	4	0.25	0.25	71A	All	24	14	96579610	96480015
	4	0.37	0.37	71B	All	24	14	96579610	96480015
	4	-	0.55	80A	All	24	19	96579613	96480015
32- 160.1	2	1.5	-	90S	All	24	24	96579617	96480015
	2	2.2	2.2	90L	All	24	24	96579617	96480015
	2	3	3	100L	All	24	28	96579619	96480015
	2	4	4	112M	All	24	28	96579619	96480015
	2	-	5.5	132S	All	24	38	96579659	96480016
	2	-	7.5	132S	All	24	38	96579659	96480016
	4	0.25	-	71A	All	24	14	96579610	96480015
	4	0.37	0.37	71B	All	24	14	96579610	96480015
	4	0.55	0.55	80A	All	24	19	96579613	96480015
	4	-	0.75	80B	All	24	19	96579613	96480015
32- 200.1	2	3	-	100L	All	24	28	96579619	96480015
	2	4	4	112M	All	24	28	96579619	96480015
	2	5.5	5.5	132S	All	24	38	96579659	96480016
	2	7.5	7.5	132S	All	24	38	96579659	96480016
	2	-	11	160M	All	24	42	96579680	96480016
	4	0.37	-	71B	All	24	14	96579610	96480015
	4	0.55	0.55	80A	All	24	19	96579613	96480015
	4	0.75	0.75	80B	All	24	19	96579613	96480015
	4	-	1.1	90S	All	24	24	96579617	96480015
	4	-	1.5	90L	All	24	24	96579617	96480015
40- 125	2	1.5	-	90S	All	24	24	96579617	96480015
	2	2.2	-	90L	All	24	24	96579617	96480015
	2	3	3	100L	All	24	28	96579619	96480015
	2	4	4	112M	All	24	28	96579619	96480015
	2	5.5	5.5	132S	All	24	38	96579659	96480016
	2	-	7.5	132S	All	24	38	96579659	96480016
	2	-	11	160M	All	24	42	96579680	96480016
	4	0.25	-	71A	All	24	14	96579610	96480015
	4	0.37	0.37	71B	All	24	14	96579610	96480015
	4	0.55	0.55	80A	All	24	19	96579613	96480015
	4	-	0.75	80B	All	24	19	96579613	96480015
	4	-	1.1	90S	All	24	24	96579617	96480015

Pump type	Motor data					Shaft diameter		Flender standard coupling	
	Pole	Power [kW]		Frame size	Make	Pump	Motor	Coupling complete	Rubber
		50 Hz	60 Hz			[mm]	[mm]		
40- 160	2	4	-	112M	All	24	28	96579619	96480015
	2	5.5	5.5	132S	All	24	38	96579659	96480016
	2	7.5	7.5	132S	All	24	38	96579659	96480016
	2	11	11	160M	All	24	42	96579680	96480016
	2	-	15	160M	All	24	42	96579680	96480016
	4	0.37	-	71B	All	24	14	96579610	96480015
	4	0.55	0.55	80A	All	24	19	96579613	96480015
	4	0.75	0.75	80B	All	24	19	96579613	96480015
	4	1.1	1.1	90S	All	24	24	96579617	96480015
	4	-	1.5	90L	All	24	24	96579617	96480015
	4	-	2.2	100L	All	24	28	96579619	96480015
40- 200	2	5.5	-	132S	All	24	38	96579659	96480016
	2	7.5	-	132S	All	24	38	96579659	96480016
	2	11	11	160M	All	24	42	96579680	96480016
	2	15	15	160M	All	24	42	96579680	96480016
	2	-	18.5	160L	All	24	42	96579680	96480016
	2	-	22	180M	All	24	48	96579682	96480017
	2	-	30	200L	All	24	55	96579683	96480018
	4	0.75	-	80B	All	24	19	96579613	96480015
	4	1.1	1.1	90S	All	24	24	96579617	96480015
	4	1.5	1.5	90L	All	24	24	96579617	96480015
	4	2.2	2.2	100L	All	24	28	96579619	96480015
	4	-	3	100L	All	24	28	96579619	96480015
40- 250	2	11	-	160M	All	24	42	96579680	96480016
	2	15	15	160M	All	24	42	96579680	96480016
	2	18.5	18.5	160L	All	24	42	96579680	96480016
	2	22	22	180M	All	24	48	96579682	96480017
	2	30	30	200L	All	24	55	96579683	96480018
	2	-	37	200L	All	24	55	96579683	96480018
	2	-	45	225M	All	24	55	96579683	96480018
	4	1.5	-	90L	All	24	24	96579617	96480015
	4	2.2	2.2	100L	All	24	28	96579619	96480015
	4	3	3	100L	All	24	28	96579619	96480015
	4	-	4	112M	All	24	28	96579619	96480015
	4	-	5.5	132S	All	24	38	96579659	96480016
40- 315	2	22	-	180M	All	32	48	-	-
	2	30	-	200L	All	32	55	-	-
	2	37	-	200L	All	32	55	-	-
	2	45	-	225M	All	32	55	-	-
	4	3	-	100L	All	32	28	-	-
	4	4	-	112M	All	32	28	-	-
	4	5.5	5.5	132S	All	32	38	-	-
	4	7.5	7.5	132S	All	32	38	-	-
	4	-	11	160M	All	32	42	-	-

Pump type	Motor data					Shaft diameter		Flender standard coupling	
	Pole	Power [kW]		Frame size	Make	Pump	Motor	Coupling complete	Rubber
		50 Hz	60 Hz			[mm]	[mm]		
50- 125	2	3	-	100L	All	24	28	96579619	96480015
	2	4	4	112M	All	24	28	96579619	96480015
	2	5.5	5.5	132S	All	24	38	96579659	96480016
	2	7.5	7.5	132S	All	24	38	96579659	96480016
	2	-	11	160M	All	24	42	96579680	96480016
	2	-	15	160M	All	24	42	96579680	96480016
	4	0.37	-	71B	All	24	14	96579610	96480015
	4	0.55	0.55	80A	All	24	19	96579613	96480015
	4	0.75	0.75	80B	All	24	19	96579613	96480015
	4	1.1	1.1	90S	All	24	24	96579617	96480015
	4	-	1.5	90L	All	24	24	96579617	96480015
50- 160	2	5.5	-	132S	All	24	38	96579659	96480016
	2	7.5	7.5	132S	All	24	38	96579659	96480016
	2	11	11	160M	All	24	42	96579680	96480016
	2	15	15	160M	All	24	42	96579680	96480016
	2	-	18.5	160L	All	24	42	96579680	96480016
	2	-	22	180M	All	24	48	96579682	96480017
	4	0.55	-	80A	All	24	19	96579613	96480015
	4	0.75	-	80B	All	24	19	96579613	96480015
	4	1.1	1.1	90S	All	24	24	96579617	96480015
	4	1.5	1.5	90L	All	24	24	96579617	96480015
	4	2.2	2.2	100L	All	24	28	96579619	96480015
	4	-	3	100L	All	24	28	96579619	96480015
50- 200	2	11	-	160M	All	24	42	96579680	96480016
	2	15	15	160M	All	24	42	96579680	96480016
	2	18.5	18.5	160L	All	24	42	96579680	96480016
	2	22	22	180M	All	24	48	96579682	96480017
	2	-	30	200L	All	24	55	96579683	96480018
	2	-	37	200L	All	24	55	96579683	96480018
	2	-	45	225M	All	24	55	96579683	96480018
	4	1.1	-	90S	All	24	24	96579617	96480015
	4	1.5	-	90L	All	24	24	96579617	96480015
	4	2.2	2.2	100L	All	24	28	96579619	96480015
	4	3	3	100L	All	24	28	96579619	96480015
	4	-	4	112M	All	24	28	96579619	96480015
	4	-	5.5	132S	All	24	38	96579659	96480016
50- 250	2	15	-	160M	All	24	42	96579680	96480016
	2	18.5	-	160L	All	24	42	96579680	96480016
	2	22	-	180M	All	24	48	96579682	96480017
	2	30	30	200L	All	24	55	96579683	96480018
	2	37	37	200L	All	24	55	96579683	96480018
	2	-	45	225M	All	24	55	96579683	96480018
	2	-	55	250M	All	24	60	96579684	96480019
	2	-	75	280S	All	24	65	96579687	96480040
	4	2.2	-	100L	All	24	28	96579619	96480015
	4	3	-	100L	All	24	28	96579619	96480015
	4	4	4	112M	All	24	28	96579619	96480015
	4	-	5.5	132S	All	24	38	96579659	96480016
	4	-	7.5	132M	All	24	38	96579659	96480016

Pump type	Motor data					Shaft diameter		Flender standard coupling	
	Pole	Power [kW]		Frame size	Make	Pump	Motor	Coupling complete	Rubber
		50 Hz	60 Hz			[mm]	[mm]		
50- 315	2	30	-	200L	All	32	55	-	-
	2	37	-	200L	All	32	55	-	-
	2	45	-	225M	All	32	55	-	-
	2	55	-	250M	All	32	60	-	-
	4	4	-	112M	All	32	28	-	-
	4	5.5	5.5	132S	All	32	38	-	-
	4	7.5	7.5	132M	All	32	38	-	-
	4	11	11	160M	All	32	42	-	-
	4	-	15	160L	All	32	42	-	-
65- 125	2	4	-	112M	All	24	28	*96579619*	*96480015*
	2	5.5	-	132S	All	24	38	*96579659*	*96480016*
	2	7.5	7.5	132S	All	24	38	*96579659*	*96480016*
	2	11	11	160M	All	24	42	*96579680*	*96480016*
	2	-	15	160M	All	24	42	*96579680*	*96480016*
	2	-	18.5	160L	All	24	42	*96579680*	*96480016*
	4	0.55	-	80A	All	24	19	*96579613*	*96480015*
	4	0.75	-	80B	All	24	19	*96579613*	*96480015*
	4	1.1	1.1	90S	All	24	24	*96579617*	*96480015*
	4	-	1.5	90L	All	24	24	*96579617*	*96480015*
	4	-	2.2	100L	All	24	28	*96579619*	*96480015*
65- 160	2	7.5	-	132S	All	24	38	*96579659*	*96480016*
	2	11	11	160M	All	24	42	*96579680*	*96480016*
	2	15	15	160M	All	24	42	*96579680*	*96480016*
	2	18.5	18.5	160L	All	24	42	*96579680*	*96480016*
	2	-	22	180M	All	24	48	*96579682*	*96480017*
	2	-	30	200L	All	24	55	*96579683*	*96480018*
	4	0.75	-	80B	All	24	19	*96579613*	*96480015*
	4	1.1	-	90S	All	24	24	*96579617*	*96480015*
	4	1.5	1.5	90L	All	24	24	*96579617*	*96480015*
	4	2.2	2.2	100L	All	24	28	*96579619*	*96480015*
	4	-	3	100L	All	24	28	*96579619*	*96480015*
	4	-	4	112M	All	24	28	*96579619*	*96480015*
65- 200	2	11	-	160M	All	24	42	*96579680*	*96480016*
	2	15	-	160M	All	24	42	*96579680*	*96480016*
	2	18.5	18.5	160L	All	24	42	*96579680*	*96480016*
	2	22	22	180M	All	24	48	*96579682*	*96480017*
	2	30	30	200L	All	24	55	*96579683*	*96480018*
	2	37	37	200L	All	24	55	*96579683*	*96480018*
	2	-	45	225M	All	24	55	*96579683*	*96480018*
	2	-	55	250M	All	24	60	*96579684*	*96480019*
	4	1.5	-	90L	All	24	24	*96579617*	*96480015*
	4	2.2	-	100L	All	24	28	*96579619*	*96480015*
	4	3	3	100L	All	24	28	*96579619*	*96480015*
	4	4	4	112M	All	24	28	*96579619*	*96480015*
	4	-	5.5	132S	All	24	38	*96579659*	*96480016*
	4	-	7.5	132M	All	24	38	*96579659*	*96480016*

Pump type	Motor data					Shaft diameter		Flender standard coupling	
	Pole	Power [kW]		Frame size	Make	Pump	Motor	Coupling complete	Rubber
		50 Hz	60 Hz			[mm]	[mm]		
65- 250	2	30	-	200L	All	32	55	96579711	96480018
	2	37	-	200L	All	32	55	96579711	96480018
	2	45	45	225M	All	32	55	96579711	96480018
	2	55	55	250M	All	32	60	96579714	96480019
	2	75	75	280S	All	32	65	96579716	96480040
	2	-	90	280M	All	32	65	96579716	96480040
	2	-	110	315S	All	32	65	96579716	96480040
	4	3	-	100L	All	32	28	96579704	96480015
	4	4	-	112M	All	32	28	96579704	96480015
	4	5.5	5.5	132S	All	32	38	96579706	96480016
	4	7.5	7.5	132M	All	32	38	96579706	96480016
	4	-	11	160M	All	32	42	96579707	96480016
	4	-	15	160L	All	32	42	96579707	96480016
65- 315	2	55	-	250M	All	32	60	-	-
	2	75	-	280S	All	32	65	-	-
	2	90	-	280M	All	32	65	-	-
	2	110	-	315S	All	32	65	-	-
	4	5.5	-	132S	All	32	38	96579706	96480016
	4	7.5	7.5	132M	All	32	38	96579706	96480016
	4	11	11	160M	All	32	42	96579707	96480016
	4	15	15	160L	All	32	42	96579707	96480016
	4	-	18.5	180M	All	32	48	96579709	96480017
	4	-	22	180L	All	32	48	96579709	96480017
80- 160	2	11	-	160M	All	24	42	96579680	96480016
	2	15	-	160M	All	24	42	96579680	96480016
	2	18.5	-	160L	All	24	42	96579680	96480016
	2	22	22	180M	All	24	48	96579682	96480017
	2	30	30	200L	All	24	55	96579683	96480018
	2	-	37	200L	All	24	55	96579683	96480018
	2	-	45	225M	All	24	55	96579683	96480018
	2	-	55	250M	All	24	60	96579684	96480019
	4	1.5	-	90L	All	24	24	96579617	96480015
	4	2.2	-	100L	All	24	28	96579619	96480015
	4	3	3	100L	All	24	28	96579619	96480015
	4	4	4	112M	All	24	28	96579619	96480015
	4	-	5.5	132S	All	24	38	96579659	96480016
80- 200	2	22	-	180M	All	32	48	96579709	96480017
	2	30	-	200L	All	32	55	96579711	96480018
	2	37	37	200L	All	32	55	96579711	96480018
	2	45	45	225M	All	32	55	96579711	96480018
	2	55	55	250M	All	32	60	96579714	96480019
	2	-	75	280S	All	32	65	96579716	96480040
	2	-	90	280M	All	32	65	96579716	96480040
	4	2.2	-	100L	All	32	28	96579704	96480015
	4	3	-	100L	All	32	28	96579704	96480015
	4	4	4	112M	All	32	28	96579704	96480015
	4	5.5	5.5	132S	All	32	38	96579706	96480016
	4	7.5	7.5	132M	All	32	38	96579706	96480016
	4	-	11	160M	All	32	42	96579707	96480016

Pump type	Motor data					Shaft diameter		Flender standard coupling	
	Pole	Power [kW]		Frame size	Make	Pump	Motor	Coupling complete	Rubber
		50 Hz	60 Hz			[mm]	[mm]		
80- 250	2	45	-	225M	All	32	55	*96579711*	*96480018*
	2	55	-	250M	All	32	60	*96579714*	*96480019*
	2	75	75	280S	All	32	65	*96579716*	*96480040*
	2	90	90	280M	All	32	65	*96579716*	*96480040*
	2	-	110	315S	All	32	65	*96579716*	*96480040*
	2	-	132	315M	All	32	65	*96579716*	*96480040*
	2	-	160	315L	All	32	65	*96579716*	*96480040*
	4	5.5	-	132S	All	32	38	*96579706*	*96480016*
	4	7.5	7.5	132M	All	32	38	*96579706*	*96480016*
	4	11	11	160M	All	32	42	*96579707*	*96480016*
	4	-	15	160L	All	32	42	*96579707*	*96480016*
	4	-	18.5	180M	All	32	48	*96579709*	*96480017*
80- 315	2	90	-	280M	All	32	65	-	-
	2	110	-	315S	All	32	65	-	-
	2	132	-	315M	All	32	65	-	-
	4	11	-	160M	All	32	42	*96579707*	*96480016*
	4	15	-	160L	All	32	42	*96579707*	*96480016*
	4	18.5	18.5	180M	All	32	48	*96579709*	*96480017*
	4	22	22	180L	All	32	48	*96579709*	*96480017*
	4	-	30	200L	All	32	55	*96579711*	*96480018*
	4	-	37	225S	All	32	60	*96579714*	*96480019*
	4	-	45	225M	All	32	60	*96579714*	*96480019*
80- 315 *	2	160	-	315L	All	42	65	-	-
80- 400	4	18.5	-	180M	All	42	48	-	-
	4	22	-	180L	All	42	48	-	-
	4	30	30	200L	All	42	55	-	-
	4	37	37	225S	All	42	60	-	-
	4	45	45	225M	All	42	60	-	-
	4	-	55	250M	Siemens, MMG-E	42	65	-	-
	4	-	55	250SC	MMG-G, EFF1 & EFF2	42	70	-	-
	4	-	75	280S	Siemens, MMG-E	42	75	-	-
	4	-	75	250MC	MMG-G, EFF1 & EFF2	42	70	-	-
	4	-	90	280M	Siemens, MMG-E	42	75	-	-
	4	-	90	280S	MMG-G, EFF1 & EFF2	42	80	-	-
100- 160	2	22	-	180M	All	24	48	-	-
	2	30	-	200L	All	24	55	-	-
	2	37	37	200L	All	24	55	-	-
	2	-	45	225M	All	24	55	-	-
	2	-	55	250M	All	24	60	-	-
	2	-	75	280S	All	24	65	-	-
	4	2.2	-	100L	All	24	28	-	-
	4	3	-	100L	All	24	28	-	-
	4	4	4	112M	All	24	28	-	-
	4	-	5.5	132S	All	24	38	-	-
	4	-	7.5	132M	All	24	38	-	-
	6	0.55	-	80B	All	24	19	-	-
	6	0.75	-	90S	All	24	24	-	-
	6	1.1	1.1	90L	All	24	24	-	-
	6	-	1.5	100L	All	24	28	-	-
	6	-	2.2	112M	All	24	28	-	-

Pump type	Motor data					Shaft diameter		Flender standard coupling	
	Pole	Power [kW]		Frame size	Make	Pump	Motor	Coupling complete	Rubber
		50 Hz	60 Hz			[mm]	[mm]		
100- 200	2	30	-	200L	All	32	55	96579711	96480018
	2	37	-	200L	All	32	55	96579711	96480018
	2	45	-	225M	All	32	55	96579711	96480018
	2	55	55	250M	All	32	60	96579714	96480019
	2	75	75	280S	All	32	65	96579716	96480040
	2	-	90	280M	All	32	65	96579716	96480040
	2	-	110	315S	All	32	65	96579716	96480040
	2	-	132	315M	All	32	65	96579716	96480040
	4	4	-	112M	All	32	28	96579704	96480015
	4	5.5	5.5	132S	All	32	38	96579706	96480016
	4	7.5	7.5	132M	All	32	38	96579706	96480016
	4	11	11	160M	All	32	42	96579707	96480016
	4	-	15	160L	All	32	42	96579707	96480016
	4	-	18.5	180M	All	32	48	96579709	96480017
	6	1.1	-	90L	All	32	24	96579702	96480015
	6	1.5	1.5	100L	All	32	28	96579704	96480015
	6	2.2	2.2	112M	All	32	28	96579704	96480015
	6	3	3	132SA	All	32	38	96579706	96480016
	6	-	4	132MA	All	32	38	96579706	96480016
	6	-	5.5	132MB	All	32	38	96579706	96480016
100- 250	2	55	-	250M	All	32	60	96579714	96480019
	2	75	-	280S	All	32	65	96579716	96480040
	2	90	-	280M	All	32	65	96579716	96480040
	2	110	110	315S	All	32	65	96579716	96480040
	2	132	132	315M	All	32	65	96579716	96480040
	2	-	160	315L	All	32	65	96579716	96480040
	2	-	200	315L	All	32	65	96579716	96480040
	2	-	280	315L	Siemens	32	65	96579716	96796255
	2	-	250	355	MMG-E	32	75	-	-
	2	-	250	315	MMG-G, EFF1	32	70	-	-
	2	-	250	355	MMG-G, EFF2	32	75	-	-
	4	7.5	-	132M	All	32	38	96579706	96480016
	4	11	-	160M	All	32	42	96579707	96480016
	4	15	15	160L	All	32	42	96579707	96480016
	4	18.5	18.5	180M	All	32	48	96579709	96480017
	4	-	22	180L	All	32	48	96579709	96480017
	4	-	30	200L	All	32	55	96579711	96480018
	6	2.2	-	112M	All	32	28	96579704	96480015
	6	3	-	132SA	All	32	38	96579706	96480016
	6	4	4	132MA	All	32	38	96579706	96480016
	6	5.5	5.5	132MB	All	32	38	96579706	96480016
	6	-	7.5	160M	All	32	42	96579707	96480016
	6	-	11	160L	All	32	42	96579707	96480016
100- 250 *	2	-	200	315L	All	42	65	-	-

Pump type	Motor data					Shaft diameter		Flender standard coupling	
	Pole	Power [kW]		Frame size	Make	Pump	Motor	Coupling complete	Rubber
		50 Hz	60 Hz			[mm]	[mm]		
100- 315	2	110	-	315S	All	32	65	-	-
	2	132	-	315M	All	32	65	-	-
	4	15	-	160L	All	32	42	*96579707*	*96480016*
	4	18.5	-	180M	All	32	48	*96579709*	*96480017*
	4	22	22	180L	All	32	48	*96579709*	*96480017*
	4	30	30	200L	All	32	55	*96579711*	*96480018*
	4	-	37	225S	All	32	60	*96579714*	*96480019*
	4	-	45	225M	All	32	60	*96579714*	*96480019*
	4	-	55	250M	Siemens, MMG-E	32	65	*96579716*	*96480040*
	4	-	55	250SC	MMG-G, EFF1 & EFF2	32	70	-	-
	6	4	-	132MA	All	32	38	*96579706*	*96480016*
	6	5.5	-	132MB	All	32	38	*96579706*	*96480016*
	6	7.5	7.5	160M	All	32	42	*96579707*	*96480016*
	6	11	11	160L	All	32	42	*96579707*	*96480016*
	6	-	15	180L	All	32	48	*96579709*	*96480017*
100- 315 *	2	160	-	315L	All	42	65	-	-
	2	200	-	315L	All	42	65	-	-
100- 400	4	22	-	180L	All	42	48	-	-
	4	30	-	200L	All	42	55	-	-
	4	37	37	225S	All	42	60	-	-
	4	45	45	225M	All	42	60	-	-
	4	55	55	250M	Siemens, MMG-E	42	65	-	-
	4	55	55	250SC	MMG-G, EFF1 & EFF2	42	70	-	-
	4	-	75	280S	Siemens, MMG-E	42	75	-	-
	4	-	75	250MC	MMG-G, EFF1 & EFF2	42	70	-	-
	4	-	90	280M	Siemens, MMG-E	42	75	-	-
	4	-	90	280S	MMG-G, EFF1 & EFF2	42	80	-	-
	6	7.5	-	160M	All	42	42	-	-
	6	11	11	160L	All	42	42	-	-
	6	15	15	180L	All	42	48	-	-
	6	18.5	18.5	200LA	All	42	55	-	-
	6	-	22	200LB	All	42	55	-	-
	6	-	30	225M	All	42	60	-	-

Pump type	Motor data					Shaft diameter		Flender standard coupling	
	Pole	Power [kW]		Frame size	Make	Pump	Motor	Coupling complete	Rubber
		50 Hz	60 Hz			[mm]	[mm]		
125- 200	2	45	-	225M	All	32	55	-	-
	2	55	-	250M	All	32	60	-	-
	2	75	75	280S	All	32	65	-	-
	2	90	90	280M	All	32	65	-	-
	2	110	110	315S	All	32	65	-	-
	2	-	132	315M	All	32	65	-	-
	2	-	160	315L	All	32	65	-	-
	2	-	200	315L	All	32	65	-	-
	4	5.5	-	132S	All	32	38	-	-
	4	7.5	-	132M	All	32	38	-	-
	4	11	11	160M	All	32	42	-	-
	4	15	15	160L	All	32	42	-	-
	4	-	18.5	180M	All	32	48	-	-
	4	-	22	180L	All	32	48	-	-
	6	1.5	-	100L	All	32	28	-	-
	6	2.2	-	112M	All	32	28	-	-
	6	3	3	132SA	All	32	38	-	-
	6	4	4	132MA	All	32	38	-	-
	6	-	5.5	132MB	All	32	38	-	-
	6	-	7.5	160M	All	32	42	-	-
125- 250	4	11	-	160M	All	32	42	*96579707*	*96480016*
	4	15	-	160L	All	32	42	*96579707*	*96480016*
	4	18.5	18.5	180M	All	32	48	*96579709*	*96480017*
	4	22	22	180L	All	32	48	*96579709*	*96480017*
	4	30	30	200L	All	32	55	*96579711*	*96480018*
	4	-	37	225S	All	32	60	*96579714*	*96480019*
	4	-	45	225M	All	32	60	*96579714*	*96480019*
	6	3	-	132SA	All	32	38	*96579706*	*96480016*
	6	4	-	132MA	All	32	38	*96579706*	*96480016*
	6	5.5	5.5	132MB	All	32	38	*96579706*	*96480016*
	6	7.5	7.5	160M	All	32	42	*96579707*	*96480016*
	6	-	11	160L	All	32	42	*96579707*	*96480016*
	6	-	15	180L	All	32	48	*96579709*	*96480017*
125- 250 *	2	90	-	280M	All	42	65	-	-
	2	110	-	315S	All	42	65	-	-
	2	132	-	315M	All	42	65	-	-
	2	160	160	315L	All	42	65	-	-
	2	200	200	315L	All	42	65	-	-
	2	-	280	315L	Siemens	42	65	-	-
	2	-	250	355	MMG-E	42	75	-	-
	2	-	250	315	MMG-G, EFF1	42	70	-	-
	2	-	250	355	MMG-G, EFF2	42	75	-	-
	2	-	353	315L	Siemens	42	65	-	-
	2	-	315	355	MMG-E	42	75	-	-
	2	-	315	315	MMG-G, EFF1	42	70	-	-
	2	-	315	355	MMG-G, EFF2	42	75	-	-

Pump type	Motor data					Shaft diameter		Flender standard coupling	
	Pole	Power [kW]		Frame size	Make	Pump	Motor	Coupling complete	Rubber
		50 Hz	60 Hz			[mm]	[mm]		
125- 315	2	132	-	315M	All	42	65	-	-
	2	160	-	315L	All	42	65	-	-
	2	200	-	315L	All	42	65	-	-
	2	250	-	315L	Siemens	42	65	-	-
	2	250	-	355	MMG-E	42	75	-	-
	2	250	-	315	MMG-G, EFF1	42	70	-	-
	2	250	-	355	MMG-G, EFF2	42	75	-	-
	4	18.5	-	180M	All	42	48	-	-
	4	22	-	180L	All	42	48	-	-
	4	30	30	200L	All	42	55	-	-
	4	37	37	225S	All	42	60	-	-
	4	45	45	225M	All	42	60	-	-
	4	-	55	250M	Siemens, MMG-E	42	65	-	-
	4	-	55	250S	MMG-G, EFF1 & EFF2	42	70	-	-
	4	-	75	280S	Siemens, MMG-E	42	75	-	-
	4	-	75	250MC	MMG-G, EFF1 & EFF2	42	70	-	-
	6	5.5	-	132MB	All	42	38	-	-
	6	7.5	7.5	160M	All	42	42	-	-
	6	11	11	160L	All	42	42	-	-
	6	15	15	180L	All	42	48	-	-
	6	-	18.5	200LA	All	42	55	-	-
	6	-	22	200LB	All	42	55	-	-
125- 400	4	37	-	225S	All	42	60	-	-
	4	45	-	225M	All	42	60	-	-
	4	55	55	250M	Siemens, MMG-E	42	65	-	-
	4	55	55	250S	MMG-G, EFF1 & EFF2	42	70	-	-
	4	75	75	280S	Siemens, MMG-E	42	75	-	-
	4	75	75	250MC	MMG-G, EFF1 & EFF2	42	70	-	-
	4	90	90	280M	Siemens, MMG-E	42	75	-	-
	4	90	90	280S	MMG-G, EFF1 & EFF2	42	80	-	-
	4	-	110	315S	Siemens, MMG-E	42	80	-	-
	4	-	110	280M	MMG-G, EFF1 & EFF2	42	80	-	-
	4	-	132	315M	Siemens, MMG-E	42	80	-	-
	4	-	132	315S	MMG-G, EFF1 & EFF2	42	85	-	-
	6	11	-	160L	All	42	42	-	-
	6	15	-	180L	All	42	48	-	-
	6	18.5	18.5	200LA	Siemens	42	55	-	-
	6	22	22	200LB	Siemens	42	55	-	-
	6	30	30	225M	Siemens	42	60	-	-
	6	-	37	250M	Siemens	42	65	-	-
	6	-	37	250S	MMG-G, EFF1 & EFF2	42	70	-	-
	6	-	45	280S	Siemens, MMG-E	42	75	-	-
	6	-	45	250M	MMG-G, EFF1 & EFF2	42	70	-	-
125- 500	4	55	-	250M	Siemens, MMG-E	60	65	-	-
	4	55	-	250SC	MMG-G, EFF1 & EFF2	60	70	-	-

Pump type	Motor data					Shaft diameter		Flender standard coupling	
	Pole	Power [kW]		Frame size	Make	Pump	Motor	Coupling complete	Rubber
		50 Hz	60 Hz			[mm]	[mm]		
	4	75	-	280S	Siemens, MMG-E	60	75	-	-
	4	75	-	250MC	MMG-G, EFF1 & EFF2	60	70	-	-
	4	90	-	280M	Siemens, MMG-E	60	75	-	-
	4	90	-	280S	MMG-G, EFF1 & EFF2	60	80	-	-
	4	110	110	315S	Siemens, MMG-E	60	80	-	-
	4	110	110	280M	MMG-G, EFF1 & EFF2	60	80	-	-
	4	132	132	315M	Siemens, MMG-E	60	80	-	-
	4	132	132	315S	MMG-G, EFF1 & EFF2	60	85	-	-
	4	160	160	315M	Siemens, MMG-E	60	80	-	-
	4	160	160	315M	MMG-G, EFF1 & EFF2	60	85	-	-
	4	-	200	315L	Siemens, MMG-E	60	80	-	-
	4	-	200	315M	MMG-G, EFF1 & EFF2	60	85	-	-
	4	-	250	355M	MMG-E	60	95	-	-
	4	-	250	315C	MMG-G, EFF 1	60	95	-	-
	4	-	250	355M	MMG-G, EFF 2	60	95	-	-
	4	-	288	315L	Siemens	60	85	-	-
	4	-	315	355L	MMG-E	60	95	-	-
	4	-	315	315D	MMG-G, EFF 1	60	95	-	-
	4	-	315	355L	MMG-G, EFF 2	60	95	-	-
	4	-	362	315L	Siemens	60	85	-	-
	6	18.5	-	200LA	Siemens	60	55	-	-
	6	22	-	200LB	Siemens	60	55	-	-
	6	30	-	225M	Siemens	60	60	-	-
	6	37	37	250M	Siemens	60	65	-	-
	6	37	37	250S	MMG-G, EFF1 & EFF2	60	70	-	-
	6	45	45	280S	Siemens, MMG-E	60	75	-	-
	6	45	45	250M	MMG-G, EFF1 & EFF2	60	70	-	-
	6	55	55	280M	Siemens, MMG-E	60	75	-	-
	6	55	55	280S	MMG-G, EFF1 & EFF2	60	80	-	-
	6	-	75	315S	Siemens, MMG-E	60	80	-	-
	6	-	75	280M	MMG-G, EFF1 & EFF2	60	80	-	-
	6	-	90	315M	Siemens, MMG-E	60	80	-	-
	6	-	90	315S	MMG-G, EFF1 & EFF2	60	85	-	-

Pump type	Motor data					Shaft diameter		Flender standard coupling	
	Pole	Power [kW]		Frame size	Make	Pump	Motor	Coupling complete	Rubber
		50 Hz	60 Hz			[mm]	[mm]		
150- 200	2	75	-	280S	All	32	65	*96579716*	*96480040*
	2	90	-	280M	All	32	65	*96579716*	*96480040*
	2	110	110	315S	All	32	65	*96579716*	*96480040*
	2	-	132	315M	All	32	65	*96579716*	*96480040*
	2	-	160	315L	All	32	65	*96579716*	*96480040*
	2	-	200	315L	All	32	65	*96579716*	*96480040*
	4	7.5	-	132M	All	32	38	*96579706*	*96480016*
	4	11	-	160M	All	32	42	*96579707*	*96480016*
	4	15	15	160L	All	32	42	*96579707*	*96480016*
	4	-	18.5	180M	All	32	48	*96579709*	*96480017*
	4	-	22	180L	All	32	48	*96579709*	*96480017*
	6	2.2	-	112M	All	32	28	*96579704*	*96480015*
	6	3	-	132SA	All	32	38	*96579706*	*96480016*
	6	4	4	132MA	All	32	38	*96579706*	*96480016*
	6	-	5.5	132MB	All	32	38	*96579706*	*96480016*
	6	-	7.5	160M	All	32	42	*96579707*	*96480016*
150- 250	2	132	-	315M	All	42	65	-	-
	2	160	-	315L	All	42	65	-	-
	2	200	-	315L	All	42	65	-	-
	2	250	-	315L	Siemens	42	65	-	-
	2	250	-	355	MMG-E	42	75	-	-
	2	250	-	315	MMG-G, EFF1	42	70	-	-
	2	250	-	355	MMG-G, EFF2	42	75	-	-
	4	15	-	160L	All	42	42	-	-
	4	18.5	-	180M	All	42	48	-	-
	4	22	-	180L	All	42	48	-	-
	4	30	30	200L	All	42	55	-	-
	4	37	37	225S	All	42	60	-	-
	4	45	45	225M	All	42	60	-	-
	4	-	55	250M	Siemens, MMG-E	42	65	-	-
	4	-	55	250SC	MMG-G, EFF1 & EFF2	42	70	-	-
	4	-	75	280S	Siemens, MMG-E	42	75	-	-
	4	-	75	250MC	MMG-G, EFF1 & EFF2	42	70	-	-
	6	5.5	-	132MB	All	42	38	-	-
	6	7.5	-	160M	All	42	42	-	-
	6	11	11	160L	All	42	42	-	-
	6	-	15	180L	All	42	48	-	-
	6	-	18.5	200LA	All	42	55	-	-

Pump type	Motor data					Shaft diameter		Flender standard coupling	
	Pole	Power [kW]		Frame size	Make	Pump	Motor	Coupling complete	Rubber
		50 Hz	60 Hz			[mm]	[mm]		
150- 315	4	37	-	225S	All	42	60	-	-
	4	45	-	225M	All	42	60	-	-
	4	55	55	250M	Siemens, MMG-E	42	65	-	-
	4	55	55	250SC	MMG-G, EFF1 & EFF2	42	70	-	-
	4	75	75	280S	Siemens, MMG-E	42	75	-	-
	4	75	75	250MC	MMG-G, EFF1 & EFF2	42	70	-	-
	4	90	90	280M	Siemens, MMG-E	42	75	-	-
	4	90	90	280S	MMG-G, EFF1 & EFF2	42	80	-	-
	4	-	110	315S	Siemens, MMG-E	42	80	-	-
	4	-	110	280M	MMG-G, EFF1 & EFF2	42	80	-	-
	4	-	132	315M	Siemens, MMG-E	42	80	-	-
	4	-	132	315S	MMG-G, EFF1 & EFF2	42	85	-	-
	6	11	-	160L	All	42	42	-	-
	6	15	-	180L	All	42	48	-	-
	6	18.5	18.5	200LA	Siemens	42	55	-	-
	6	22	22	200LB	Siemens	42	55	-	-
	6	30	30	225M	Siemens	42	60	-	-
	6	-	37	250M	Siemens	42	65	-	-
	6	-	37	250S	MMG-G, EFF1 & EFF2	42	70	-	-
150- 400	4	55	-	250M	Siemens, MMG-E	42	65	-	-
	4	55	-	250SC	MMG-G, EFF1 & EFF2	42	70	-	-
	4	75	-	280S	Siemens, MMG-E	42	75	-	-
	4	75	-	250MC	MMG-G, EFF1 & EFF2	42	70	-	-
	4	90	90	280M	Siemens, MMG-E	42	75	-	-
	4	90	90	280S	MMG-G, EFF1 & EFF2	42	80	-	-
	4	110	110	315S	Siemens, MMG-E	42	80	-	-
	4	110	110	280M	MMG-G, EFF1 & EFF2	42	80	-	-
	4	132		315M	Siemens, MMG-E	48	80	-	-
	4	132		315S	MMG-G, EFF1 & EFF2	48	85	-	-
	4		132	315M	Siemens, MMG-E	42	80	-	-
	4		132	315S	MMG-G, EFF1 & EFF2	42	85	-	-
	4	160		315M	Siemens, MMG-E	48	80	-	-
	4	160		315M	MMG-G, EFF1 & EFF2	48	85	-	-
	4		160	315M	Siemens, MMG-E	42	80	-	-
	4		160	315M	MMG-G, EFF1 & EFF2	42	85	-	-
	4	-	200	315L	Siemens, MMG-E	48	80	-	-
	4	-	200	315M	MMG-G, EFF1 & EFF2	48	85	-	-
	4	-	250	355M	MMG-E	48	95	-	-
	4	-	250	315C	MMG-G, EFF 1	48	95	-	-
	4	-	250	355M	MMG-G, EFF 2	48	95	-	-
	4	-	288	315L	Siemens	48	85	-	-

Pump type	Motor data					Shaft diameter		Flender standard coupling	
	Pole	Power [kW]		Frame size	Make	Pump	Motor	Coupling complete	Rubber
		50 Hz	60 Hz			[mm]	[mm]		
	6	18.5	-	200LA	Siemens	42	55	-	-
	6	22	22	200LB	Siemens	42	55	-	-
	6	30	30	225M	Siemens	42	60	-	-
	6	37	37	250M	Siemens	42	65	-	-
	6	37	37	250S	MMG-G, EFF1 & EFF2	42	70	-	-
	6	45	45	280S	Siemens, MMG-E	42	75	-	-
	6	45	45	250M	MMG-G, EFF1 & EFF2	42	70	-	-
	6	-	55	280M	Siemens, MMG-E	42	75	-	-
	6	-	55	280S	MMG-G, EFF1 & EFF2	42	80	-	-
	6	-	75	315S	Siemens, MMG-E	42	80	-	-
	6	-	75	280M	MMG-G, EFF1 & EFF2	42	80	-	-
150- 500	4	132	-	315M	Siemens, MMG-E	60	80	-	-
	4	132	-	315S	MMG-G, EFF1 & EFF2	60	85	-	-
	4	160	-	315M	Siemens, MMG-E	60	80	-	-
	4	160	-	315M	MMG-G, EFF1 & EFF2	60	85	-	-
	4	200	-	315L	Siemens, MMG-E	60	80	-	-
	4	200	-	315M	MMG-G, EFF1 & EFF2	60	85	-	-
	6	37	-	250M	Siemens	60	65	-	-
	6	37	-	250S	MMG-G, EFF1 & EFF2	60	70	-	-
	6	45	-	280S	Siemens, MMG-E	60	75	-	-
	6	45	-	250M	MMG-G, EFF1 & EFF2	60	70	-	-
	6	55	55	280M	Siemens, MMG-E	60	75	-	-
	6	55	55	280S	MMG-G, EFF1 & EFF2	60	80	-	-
	6	75	75	315S	Siemens, MMG-E	60	80	-	-
	6	75	75	280M	MMG-G, EFF1 & EFF2	60	80	-	-
	6	-	90	315M	Siemens, MMG-E	60	80	-	-
	6	-	90	315S	MMG-G, EFF1 & EFF2	60	85	-	-
	6	-	110	315M	Siemens	60	80	-	-
	6	-	110	315L	MMG-E	60	80	-	-
	6	-	110	315M	MMG-G, EFF1 & EFF2	60	85	-	-
	6	-	132	315L	Siemens, MMG-E	60	80	-	-
	6	-	132	315M	MMG-G, EFF1 & EFF2	60	85	-	-

Sensor for NKE Series 2000

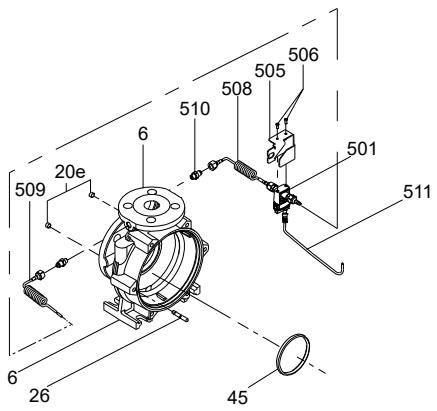

TM073633

Kit, pump housing
6: 1 x pump housing 20: hexagon socket head plug (can be 2/3/4 pcs) 26:staybolt (can be 6/8/12 pcs) 45:1 x wear ring
Kit, differential-pressure sensor
501: 1 x sensor 506: 2 x screw 511: 1 x cable (including connector to sensor)
Kit, sensor bracket
505: 1 x sensor bracket
Kit, capillary tube
508: 1 x capillary tube 509: 1 x capillary tube 5102 x adapter plug
Kit, cable
511: 1 x cable (including connector to sensor)

Kit, pump housing

Pump type		Pump housing	
		With feet	Without feet
32-	125.1	*99563387*	-
	125	*99563388*	-
	160.1	*99563385*	-
	160	*99563386*	-
	200.1	*99563383*	-
	200	*99563384*	-
	250	99492504	-
40-	125	*99563382*	-
	160	*99563381*	-
	200	*99563379*	99563380
	250	*99563377*	99563378
	315	99492511	-
50-	125	*99563376*	-
	160	*99563374*	99563375
	200	*99563372*	99563373
	250	*99563370*	99563371
	315	99492519	-
65-	125	*99563366*	-
	160	*99563364*	99563365
	200	*99563362*	99563363
	250	*99563359*	-
	315	*99563358*	-
80-	160	*99563340*	99563341
	200	*99563339*	-
	250	*99563338*	-
100-	160	99492535	-
	200	99492537	-
125-	200	99492538	-
150-	200	99563389	-

Kit, differential-pressure sensor

0-4 bar	0-6 bar	0-10 bar
99562724	*99562725*	*99562726*

Kit, bracket for sensor

99562727

Kit, capillary tube

99184237

Kit, cable

99562728

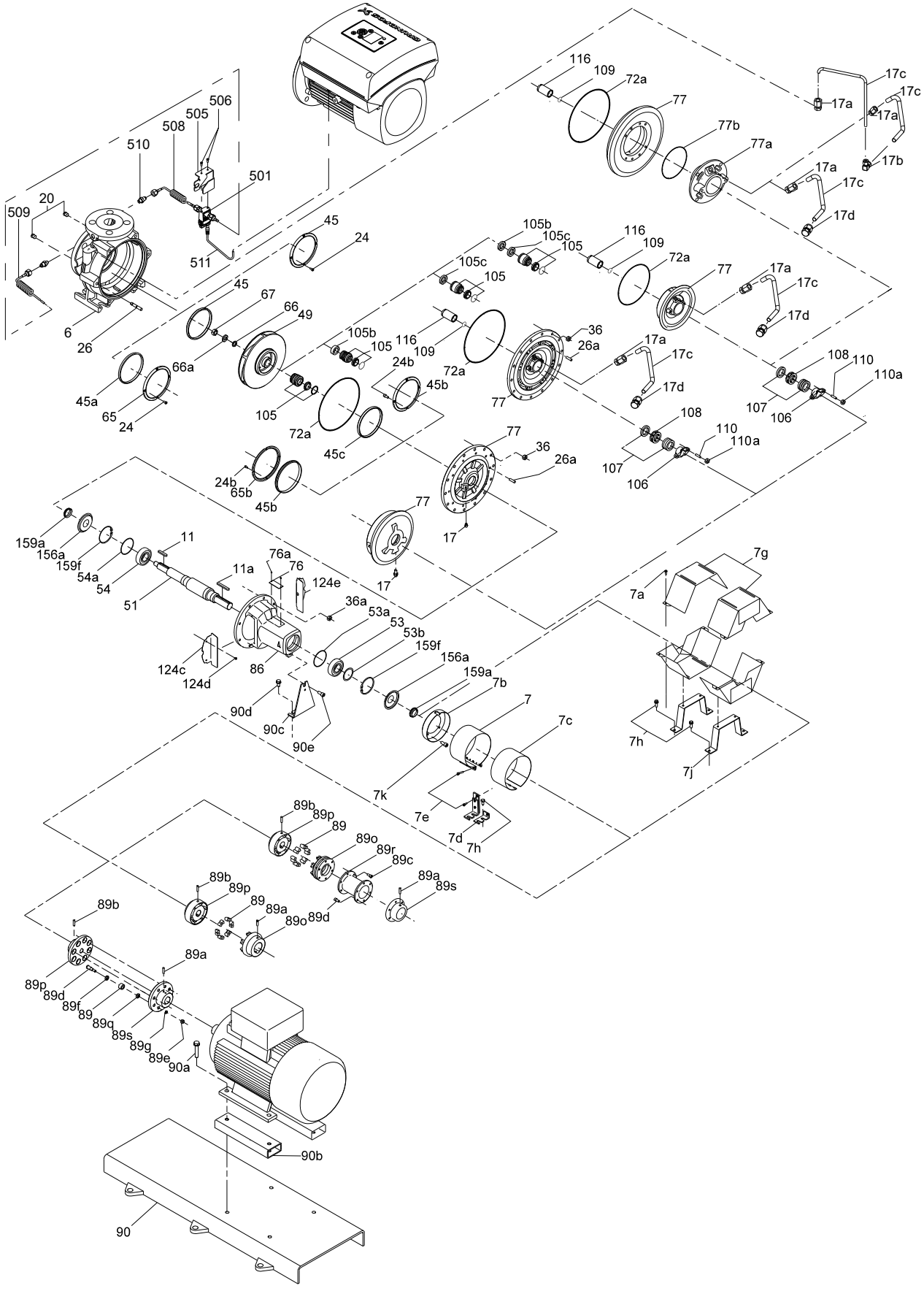

TM034895

Exploded view

61. NKG

Model B

50/60 Hz

Contents of this chapter

Kit type
Shaft seal
Spacer ring for shaft seal
O-ring
Stuffing box, shaft sleeve and gland
Stuffing box, shaft guard and pipe
Shaft
Bearings, spacer ring, V-ring and oil seal
Wear ring
Impeller
Nut, washer and key for impeller
Coupling

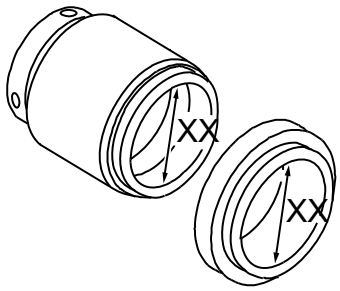

Shaft seal					
MG1	MG12	MG13/RMG13	M7N	HJ92N/HJ977	CARTEX
					

Shaft seal designs

Content

Pos.	Description	BAQE	BAQV	BQQE	BQQV	BBQE	BBQV	DAQF
105	Shaft seal	1	1	1	1	1	1	1
Burgmann specification	Type	MG1/MG13/ XX-G6	MG1/MG13/ XX-G6	MG1/MG12/MG13/ XX-G6	MG1/MG12/MG13/ XX-G6	MG13/ XX-G6	MG13/ XX-G6	HJ92N/ XX-00
	Material	Material code: **A, B, C, D, E, F, G, H, I, J, K, M, N, P, S, T, U, W**						
		AQ1E GG	AQ1V GG	Q7Q7E GG	Q7Q7V GG	BQ1E GG	BQ1V GG	AQ1V9 GG
		Material code: **L, R**						
		AQ1E MM	AQ1V MM	Q1Q1E MM	Q1Q1V MM	BQ1E MM	BQ1V MM	AQ1V9 MM

Pos.	Description	DQQE	DQQV	DQQX	DQQK	AQQE	AQQX	AQQK	AQQV	AQAE	AQAV
105	Shaft seal	1	1	1	1	1	1	1	1	1	1
Burgmann specification	Type	HJ92N/ XX-00	HJ92N/ XX-00	HJ92N/ XX-00	HJ92N/ XX-00	M7N/ XX-00	M7N/ XX-00	M7N/ XX-00	M7N/ XX-00	M7N/ XX-00	M7N/ XX-00
	Material	Material code: **A, B, C, D, E, F, G, H, I, J, K, M, N, P, S, T, U, W**									
		Q6Q6E GG	Q6Q6V GG	Q6Q6X4 GG	Q6Q6K23 GG	Q1Q1E GG	Q1Q1X4 GG	Q1Q1K23 GG	Q1Q1V GG	Q1AE GG	Q1AV GG
		Material code: **L, R**									
		Q6Q6E MM	Q6Q6V MM	Q6Q6X4MM	Q6Q6K23M M	Q1Q1E MM	Q1Q1X4MM	Q1Q1K23 MM	Q1Q1V MM	Q1AE MM	Q1AV MM

Pos.	Description		HBQV	HBQV/HBQV	HQQU/HBQV
105	Shaft seal		1	1	1
Burgmann specification	Type		CARTEX-SN/48-	CARTEX-DN/48-	CARTEX-DN/48-
	Material	Material code: **A, B, C, D, E, F, G, H, I, J, K, M, N, P, S, T, U, W**			
			BQ1V GG	BQ1V GG/BQ1V GG	Q1Q1U GG/BQ1V GG
		Material code: **L, R**			
			-	-	-

Note: XX = 28, 38, 48, 55 or 60. XX is the internal diameter of the shaft seal.

Shaft seal

Material code: A, B, C, D, E, F, G, H, I, J, K, M, N, P, S, T, U, W

The material code can be found in the type designation on the nameplate.

NKG	125-100-160 /160-142	H2	F3	NKE	O	2926

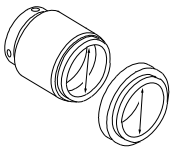

Shaft seal diameter

Pump type		Shaft seal dia.	BAQE		BAQV		BQQE			BQQV			BQQV [1]
			MG1	MG13	MG1	MG13	MG1	MG12	MG13	MG1	MG12	MG13	MG13
50-32-	125.1	28	97904582	99469500	97904583	96548353	97904585	97904589	98434904	97904586	97904591	98434905	98670789
	160.1	28	97904582	99469500	97904583	96548353	97904585	97904589	98434904	97904586	97904591	98434905	98670789
	200.1	28	97904582	99469500	97904583	96548353	97904585	97904589	98434904	97904586	97904591	98434905	98670789
	125	28	97904582	99469500	97904583	96548353	97904585	97904589	98434904	97904586	97904591	98434905	98670789
	160	28	97904582	99469500	97904583	96548353	97904585	97904589	98434904	97904586	97904591	98434905	98670789
	200	28	97904582	99469500	97904583	96548353	97904585	97904589	98434904	97904586	97904591	98434905	98670789
	250	38	97904617	99469502	97904618	96548357	97904619	97904623	98434906	97904620	97904624	98434908	98670790
65-50-	125	28	97904582	99469500	97904583	96548353	97904585	97904589	98434904	97904586	97904591	98434905	98670789
	160	28	97904582	99469500	97904583	96548353	97904585	97904589	98434904	97904586	97904591	98434905	98670789
65-40-	200	28	97904582	99469500	97904583	96548353	97904585	97904589	98434904	97904586	97904591	98434905	98670789
	250	38	97904617	99469502	97904618	96548357	97904619	97904623	98434906	97904620	97904624	98434908	98670790
	315	38	97904617	99469502	97904618	96548357	97904619	97904623	98434906	97904620	97904624	98434908	98670790
80-65-	125	28	97904582	99469500	97904583	96548353	97904585	97904589	98434904	97904586	97904591	98434905	98670789
	160	28	97904582	99469500	97904583	96548353	97904585	97904589	98434904	97904586	97904591	98434905	98670789
80-50-	200	28	97904582	99469500	97904583	96548353	97904585	97904589	98434904	97904586	97904591	98434905	98670789
	250	38	97904617	99469502	97904618	96548357	97904619	97904623	98434906	97904620	97904624	98434908	98670790
	315	38	97904617	99469502	97904618	96548357	97904619	97904623	98434906	97904620	97904624	98434908	98670790
100-80-	125	28	97904582	99469500	97904583	96548353	97904585	97904589	98434904	97904586	97904591	98434905	98670789
	160	38	97904617	99469502	97904618	96548357	97904619	97904623	98434906	97904620	97904624	98434908	98670790
100-65-	200	38	97904617	99469502	97904618	96548357	97904619	97904623	98434906	97904620	97904624	98434908	98670790
	250	38	97904617	99469502	97904618	96548357	97904619	97904623	98434906	97904620	97904624	98434908	98670790
	315	48	97685469	99469498	97685472	96658791	97685475	97685485	98434909	97685477	97685486	98434941	98670801
125-80-	160	38	97904617	99469502	97904618	96548357	97904619	97904623	98434906	97904620	97904624	98434908	98670790
	200	38	97904617	99469502	97904618	96548357	97904619	97904623	98434906	97904620	97904624	98434908	98670790
	250	38	97904617	99469502	97904618	96548357	97904619	97904623	98434906	97904620	97904624	98434908	98670790
	315	48	97685469	99469498	97685472	96658791	97685475	97685485	98434909	97685477	97685486	98434941	98670801
	400.1	48	97685469	99469498	97685472	96658791	97685475	97685485	98434909	97685477	97685486	98434941	98670801
	400	48	97685469	99469498	97685472	96658791	97685475	97685485	98434909	97685477	97685486	98434941	98670801
	400 [2]	55	-	99469499	-	96658801	-	-	98434943	-	-	98434944	98670802
125-100-	160	38	97904617	99469502	97904618	96548357	97904619	97904623	98434906	97904620	97904624	98434908	98670790
	200	38	97904617	99469502	97904618	96548357	97904619	97904623	98434906	97904620	97904624	98434908	98670790
	250	48	97685469	99469498	97685472	96658791	97685475	97685485	98434909	97685477	97685486	98434941	98670801
	315	48	97685469	99469498	97685472	96658791	97685475	97685485	98434909	97685477	97685486	98434941	98670801
	400	48	97685469	99469498	97685472	96658791	97685475	97685485	98434909	97685477	97685486	98434941	98670801
150-125-	200	38	97904617	99469502	97904618	96548357	97904619	97904623	98434906	97904620	97904624	98434908	98670790
	250	48	97685469	99469498	97685472	96658791	97685475	97685485	98434909	97685477	97685486	98434941	98670801
	315	48	97685469	99469498	97685472	96658791	97685475	97685485	98434909	97685477	97685486	98434941	98670801
	400	48	97685469	99469498	97685472	96658791	97685475	97685485	98434909	97685477	97685486	98434941	98670801
	500	60	97685550	99469513	97685554	96658815	97685530	97685567	98434945	97685545	97685572	98434947	98670803

Pump type		Shaft seal dia.	BAQE		BAQV		BQQE			BQQV			BQQV [1]
			MG1	MG13	MG1	MG13	MG1	MG12	MG13	MG1	MG12	MG13	MG13
200-150-	200	38	97904617	99469502	97904618	96548357	97904619	97904623	98434906	97904620	97904624	98434908	98670790
	250	48	97685469	99469498	97685472	96658791	97685475	97685485	98434909	97685477	97685486	98434941	98670801
	315.1	55	97685548	99469499	97685552	96658801	97685528	97685565	98434943	97685542	97685570	98434944	98670802
	315.2	55	97685548	99469499	97685552	96658801	97685528	97685565	98434943	97685542	97685570	98434944	98670802
	315	55	97685548	99469499	97685552	96658801	97685528	97685565	98434943	97685542	97685570	98434944	98670802
	400	55	97685548	99469499	97685552	96658801	97685528	97685565	98434943	97685542	97685570	98434944	98670802
	500	60	97685550	99469513	97685554	96658815	97685530	97685567	98434945	97685545	97685572	98434947	98670803
250-200-	400	55	-	99469499	-	96658801	-	-	98434943	-	-	98434944	98670802
	450	55	-	99469499	-	96658801	-	-	98434943	-	-	98434944	98670802
300-250-	350	55	-	99469499	-	96658801	-	-	98434943	-	-	98434944	98670802
	400	55	-	99469499	-	96658801	-	-	98434943	-	-	98434944	98670802
	450	60	-	99469513	-	96658815	-	-	98434945	-	-	98434947	98670803
	500	60	-	99469513	-	96658815	-	-	98434945	-	-	98434947	98670803

1) PWIS-free shaft seal.

2) For 2-pole model only.

Pump type		Shaft seal dia.	BBQE			BBQV			BQBE
			MG1	MG12	MG13	MG1	MG12	MG13	RMG13
50-32-	125.1	28	97904587	97904592	96551963	97904588	97904593	97769885	96548351
	160.1	28	97904587	97904592	96551963	97904588	97904593	97769885	96548351
	200.1	28	97904587	97904592	96551963	97904588	97904593	97769885	96548351
	125	28	97904587	97904592	96551963	97904588	97904593	97769885	96548351
	160	28	97904587	97904592	96551963	97904588	97904593	97769885	96548351
	200	28	97904587	97904592	96551963	97904588	97904593	97769885	96548351
	250	38	97904621	97904625	96551928	97904622	97904626	97769887	96548356
65-50-	125	28	97904587	97904592	96551963	97904588	97904593	97769885	96548351
	160	28	97904587	97904592	96551963	97904588	97904593	97769885	96548351
65-40-	200	28	97904587	97904592	96551963	97904588	97904593	97769885	96548351
	250	38	97904621	97904625	96551928	97904622	97904626	97769887	96548356
	315	38	97904621	97904625	96551928	97904622	97904626	97769887	96548356
80-65-	125	28	97904587	97904592	96551963	97904588	97904593	97769885	96548351
	160	28	97904587	97904592	96551963	97904588	97904593	97769885	96548351
80-50-	200	28	97904587	97904592	96551963	97904588	97904593	97769885	96548351
	250	38	97904621	97904625	96551928	97904622	97904626	97769887	96548356
	315	38	97904621	97904625	96551928	97904622	97904626	97769887	96548356
100-80-	125	28	97904587	97904592	96551963	97904588	97904593	97769885	96548351
	160	38	97904621	97904625	96551928	97904622	97904626	97769887	96548356
100-65-	200	38	97904621	97904625	96551928	97904622	97904626	97769887	96548356
	250	38	97904621	97904625	96551928	97904622	97904626	97769887	96548356
	315	48	97685480	97685490	96658794	97685481	97685492	97769889	-
125-80-	160	38	97904621	97904625	96551928	97904622	97904626	97769887	96548356
	200	38	97904621	97904625	96551928	97904622	97904626	97769887	96548356
	250	38	97904621	97904625	96551928	97904622	97904626	97769887	96548356
	315	48	97685480	97685490	96658794	97685481	97685492	97769889	-
	400.1	48	97685480	97685490	96658794	97685481	97685492	97769889	-
	400	48	97685480	97685490	96658794	97685481	97685492	97769889	-
	400 [3]	55	-	-	96658804	-	-	97769891	-
125-100-	160	38	97904621	97904625	96551928	97904622	97904626	97769887	96548356
	200	38	97904621	97904625	96551928	97904622	97904626	97769887	96548356
	250	48	97685480	97685490	96658794	97685481	97685492	97769889	-
	315	48	97685480	97685490	96658794	97685481	97685492	97769889	-
	400	48	97685480	97685490	96658794	97685481	97685492	97769889	-

Pump type		Shaft seal dia.	BBQE			BBQV			BQBE
			MG1	MG12	MG13	MG1	MG12	MG13	RMG13
150-125-	200	38	97904621	97904625	96551928	97904622	97904626	97769887	96548356
	250	48	97685480	97685490	96658794	97685481	97685492	97769889	-
	315	48	97685480	97685490	96658794	97685481	97685492	97769889	-
	400	48	97685480	97685490	96658794	97685481	97685492	97769889	-
	500	60	97685520	97685558	96658818	97685524	97685563	97769893	-
200-150-	200	38	97904621	97904625	96551928	97904622	97904626	97769887	96548356
	250	48	97685480	97685490	96658794	97685481	97685492	97769889	-
	315.1	55	97685525	97685556	96658804	97685522	97685560	97769891	-
	315.2	55	97685525	97685556	96658804	97685522	97685560	97769891	-
	315	55	97685525	97685556	96658804	97685522	97685560	97769891	-
	400	55	97685525	97685556	96658804	97685522	97685560	97769891	-
	500	60	97685520	97685558	96658818	97685524	97685563	97769893	-
250-200-	400	55	-	-	96658804	-	-	97769891	-
	450	55	-	-	96658804	-	-	97769891	-
300-250-	350	55	-	-	96658804	-	-	97769891	-
	400	55	-	-	96658804	-	-	97769891	-
	450	60	-	-	96658818	-	-	97769893	-
	500	60	-	-	96658818	-	-	97769893	-

3) For 2-pole model only.

Pump type		Shaft seal dia.	DAQF	DQQE	DQQK	DQQV	DQQX	AQQE	AQQK
			HJ92N	HJ977GN	HJ977GN	HJ977GN	HJ977GN	M7N	M7N
50-32-	125.1	28	96548355	97769895	97769911	97769899	97769907	96551965	97769915
	160.1	28	96548355	97769895	97769911	97769899	97769907	96551965	97769915
	200.1	28	96548355	97769895	97769911	97769899	97769907	96551965	97769915
	125	28	96548355	97769895	97769911	97769899	97769907	96551965	97769915
	160	28	96548355	97769895	97769911	97769899	97769907	96551965	97769915
	200	28	96548355	97769895	97769911	97769899	97769907	96551965	97769915
	250	38	96548359	97769897	97769913	97769901	97769909	96551960	97769917
65-50-	125	28	96548355	97769895	97769911	97769899	97769907	96551965	97769915
	160	28	96548355	97769895	97769911	97769899	97769907	96551965	97769915
65-40-	200	28	96548355	97769895	97769911	97769899	97769907	96551965	97769915
	250	38	96548359	97769897	97769913	97769901	97769909	96551960	97769917
	315	38	96548359	97769897	97769913	97769901	97769909	96551960	97769917
80-65-	125	28	96548355	97769895	97769911	97769899	97769907	96551965	97769915
	160	28	96548355	97769895	97769911	97769899	97769907	96551965	97769915
80-50-	200	28	96548355	97769895	97769911	97769899	97769907	96551965	97769915
	250	38	96548359	97769897	97769913	97769901	97769909	96551960	97769917
	315	38	96548359	97769897	97769913	97769901	97769909	96551960	97769917
100-80-	125	28	96548355	97769895	97769911	97769899	97769907	96551965	97769915
	160	38	96548359	97769897	97769913	97769901	97769909	96551960	97769917
100-65-	200	38	96548359	97769897	97769913	97769901	97769909	96551960	97769917
	250	38	96548359	97769897	97769913	97769901	97769909	96551960	97769917
	315	48	96658796	97685509	97685516	97685511	97685514	96658799	97685504
125-80-	160	38	96548359	97769897	97769913	97769901	97769909	96551960	97769917
	200	38	96548359	97769897	97769913	97769901	97769909	96551960	97769917
	250	38	96548359	97769897	97769913	97769901	97769909	96551960	97769917
	315	48	96658796	97685509	97685516	97685511	97685514	96658799	97685504
	400.1	48	96658796	97685509	97685516	97685511	97685514	96658799	97685504
	400	48	96658796	97685509	97685516	97685511	97685514	96658799	97685504
	400 4)	55	96658807	97685596	97685608	97685600	97685604	96658810	97685588

Pump type		Shaft seal dia.	DAQF	DQQE	DQQK	DQQV	DQQX	AQQE	AQQK
			HJ92N	HJ977GN	HJ977GN	HJ977GN	HJ977GN	M7N	M7N
125-100-	160	38	96548359	97769897	97769913	97769901	97769909	96551960	97769917
	200	38	96548359	97769897	97769913	97769901	97769909	96551960	97769917
	250	48	96658796	97685509	97685516	97685511	97685514	96658799	97685504
	315	48	96658796	97685509	97685516	97685511	97685514	96658799	97685504
	400	48	96658796	97685509	97685516	97685511	97685514	96658799	97685504
150-125-	200	38	96548359	97769897	97769913	97769901	97769909	96551960	97769917
	250	48	96658796	97685509	97685516	97685511	97685514	96658799	97685504
	315	48	96658796	97685509	97685516	97685511	97685514	96658799	97685504
	400	48	96658796	97685509	97685516	97685511	97685514	96658799	97685504
	500	60	96658820	97685598	97685610	97685602	97685606	96658823	97685590
200-150-	200	38	96548359	97769897	97769913	97769901	97769909	96551960	97769917
	250	48	96658796	97685509	97685516	97685511	97685514	96658799	97685504
	315.1	55	96658807	97685596	97685608	97685600	97685604	96658810	97685588
	315.2	55	96658807	97685596	97685608	97685600	97685604	96658810	97685588
	315	55	96658807	97685596	97685608	97685600	97685604	96658810	97685588
	400	55	96658807	97685596	97685608	97685600	97685604	96658810	97685588
	500	60	96658820	97685598	97685610	97685602	97685606	96658823	97685590
250-200-	400	55	96658807	97685596	97685608	97685600	97685604	96658810	97685588
	450	55	96658807	97685596	97685608	97685600	97685604	96658810	97685588
300-250-	350	55	96658807	97685596	97685608	97685600	97685604	96658810	97685588
	400	55	96658807	97685596	97685608	97685600	97685604	96658810	97685588
	450	60	96658820	97685598	97685610	97685602	97685606	96658823	97685590
	500	60	96658820	97685598	97685610	97685602	97685606	96658823	97685590

4) For 2-pole model only.

Pump type		Shaft seal dia.	AQQV	AQQX	AQAE	AQAV	HBQV	HBQV/HBQV	HQQU/HBQV
			M7N	M7N	M7N	M7N	CARTEX-SN	CARTEX-DN	CARTEX-DN
50-32-	125.1	28	96551967	97769903	96551964	96551966	97904597	97904598	97904599
	160.1	28	96551967	97769903	96551964	96551966	97904597	97904598	97904599
	200.1	28	96551967	97769903	96551964	96551966	97904597	97904598	97904599
	125	28	96551967	97769903	96551964	96551966	97904597	97904598	97904599
	160	28	96551967	97769903	96551964	96551966	97904597	97904598	97904599
	200	28	96551967	97769903	96551964	96551966	97904597	97904598	97904599
	250	38	96551962	97769905	96551929	96551961	97904629	97904630	97904631
65-50-	125	28	96551967	97769903	96551964	96551966	97904597	97904598	97904599
	160	28	96551967	97769903	96551964	96551966	97904597	97904598	97904599
65-40-	200	28	96551967	97769903	96551964	96551966	97904597	97904598	97904599
	250	38	96551962	97769905	96551929	96551961	97904629	97904630	97904631
	315	38	96551962	97769905	96551929	96551961	97904629	97904630	97904631
80-65-	125	28	96551967	97769903	96551964	96551966	97904597	97904598	97904599
	160	28	96551967	97769903	96551964	96551966	97904597	97904598	97904599
80-50-	200	28	96551967	97769903	96551964	96551966	97904597	97904598	97904599
	250	38	96551962	97769905	96551929	96551961	97904629	97904630	97904631
	315	38	96551962	97769905	96551929	96551961	97904629	97904630	97904631
100-80-	125	28	96551967	97769903	96551964	96551966	97904597	97904598	97904599
	160	38	96551962	97769905	96551929	96551961	97904629	97904630	97904631
100-65-	200	38	96551962	97769905	96551929	96551961	97904629	97904630	97904631
	250	38	96551962	97769905	96551929	96551961	97904629	97904630	97904631
	315	48	96658800	97685501	96658797	96658798	97685458	97685462	97685463

Pump type		Shaft seal dia.	AQQV	AQQX	AQAE	AQAV	HBQV	HBQV/HBQV	HQQU/HBQV
			M7N	M7N	M7N	M7N	CARTEX-SN	CARTEX-DN	CARTEX-DN
125-80-	160	38	96551962	97769905	96551929	96551961	97904629	97904630	97904631
	200	38	96551962	97769905	96551929	96551961	97904629	97904630	97904631
	250	38	96551962	97769905	96551929	96551961	97904629	97904630	97904631
	315	48	96658800	97685501	96658797	96658798	97685458	97685462	97685463
	400.1	48	96658800	97685501	96658797	96658798	97685458	97685462	97685463
	400	48	96658800	97685501	96658797	96658798	97685458	97685462	97685463
	400 [5)]	55	96658811	97685584	96658808	96658809	97685460	97685464	97685465
125-100-	160	38	96551962	97769905	96551929	96551961	97904629	97904630	97904631
	200	38	96551962	97769905	96551929	96551961	97904629	97904630	97904631
	250	48	96658800	97685501	96658797	96658798	97685458	97685462	97685463
	315	48	96658800	97685501	96658797	96658798	97685458	97685462	97685463
	400	48	96658800	97685501	96658797	96658798	97685458	97685462	97685463
150-125-	200	38	96551962	97769905	96551929	96551961	97904629	97904630	97904631
	250	48	96658800	97685501	96658797	96658798	97685458	97685462	97685463
	315	48	96658800	97685501	96658797	96658798	97685458	97685462	97685463
	400	48	96658800	97685501	96658797	96658798	97685458	97685462	97685463
	500	60	96658824	97685586	96658821	96658822	97685461	97685466	97685467
200-150-	200	38	96551962	97769905	96551929	96551961	97904629	97904630	97904631
	250	48	96658800	97685501	96658797	96658798	97685458	97685462	97685463
	315.1	55	96658811	97685584	96658808	96658809	97685460	97685464	97685465
	315.2	55	96658811	97685584	96658808	96658809	97685460	97685464	97685465
	315	55	96658811	97685584	96658808	96658809	97685460	97685464	97685465
	400	55	96658811	97685584	96658808	96658809	97685460	97685464	97685465
	500	60	96658824	97685586	96658821	96658822	97685461	97685466	97685467
250-200-	400	55	96658811	97685584	96658808	96658809	-	-	-
	450	55	96658811	97685584	96658808	96658809	-	-	-
300-250-	350	55	96658811	97685584	96658808	96658809	-	-	-
	400	55	96658811	97685584	96658808	96658809	-	-	-
	450	60	96658824	97685586	96658821	96658822	-	-	-
	500	60	96658824	97685586	96658821	96658822	-	-	-

5) For 2-pole model only.

Shaft seal

Material code: L, R

The material code can be found in the type designation on the nameplate.

NKG	125-100-160 /160-142	H2	F	3	L	KE	O	2926

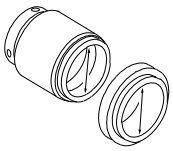

Shaft seal diameter

Pump type		Shaft seal dia.	BQQE			BQQV			BQQV [1]
			MG1	MG12	MG13	MG1	MG12	MG13	MG13
50-32-	125.1	28	97904603	97904608	96658826	97904604	97904609	96658828	98670804
	160.1	28	97904603	97904608	96658826	97904604	97904609	96658828	98670804
	200.1	28	97904603	97904608	96658826	97904604	97904609	96658828	98670804
	125	28	97904603	97904608	96658826	97904604	97904609	96658828	98670804
	160	28	97904603	97904608	96658826	97904604	97904609	96658828	98670804
	200	28	97904603	97904608	96658826	97904604	97904609	96658828	98670804
	250	38	97904635	97904640	96658837	97904637	97904641	96658839	98670805
65-50-	125	28	97904603	97904608	96658826	97904604	97904609	96658828	98670804
	160	28	97904603	97904608	96658826	97904604	97904609	96658828	98670804
65-40-	200	28	97904603	97904608	96658826	97904604	97904609	96658828	98670804
	250	38	97904635	97904640	96658837	97904637	97904641	96658839	98670805
	315	38	97904635	97904640	96658837	97904637	97904641	96658839	98670805
80-65-	125	28	97904603	97904608	96658826	97904604	97904609	96658828	98670804
	160	28	97904603	97904608	96658826	97904604	97904609	96658828	98670804
80-50-	200	28	97904603	97904608	96658826	97904604	97904609	96658828	98670804
	250	38	97904635	97904640	96658837	97904637	97904641	96658839	98670805
	315	38	97904635	97904640	96658837	97904637	97904641	96658839	98670805
100-80-	125	28	97904603	97904608	96658826	97904604	97904609	96658828	98670804
	160	38	97904635	97904640	96658837	97904637	97904641	96658839	98670805
100-65-	200	38	97904635	97904640	96658837	97904637	97904641	96658839	98670805
	250	38	97904635	97904640	96658837	97904637	97904641	96658839	98670805
	315	48	97685478	97685487	96658858	97685479	97685489	96658861	98670806
125-80-	160	38	97904635	97904640	96658837	97904637	97904641	96658839	98670805
	200	38	97904635	97904640	96658837	97904637	97904641	96658839	98670805
	250	38	97904635	97904640	96658837	97904637	97904641	96658839	98670805
	315	48	97685478	97685487	96658858	97685479	97685489	96658861	98670806
	400.1	48	-	-	96658858	-	-	96658861	98670806
	400	48	97685478	97685487	96658858	97685479	97685489	96658861	98670806
	400 [2]	55	97685529	97685566	97769927	97685544	97685571	97769929	98670807
125-100-	160	38	97904635	97904640	96658837	97904637	97904641	96658839	98670805
	200	38	97904635	97904640	96658837	97904637	97904641	96658839	98670805
	250	48	97685478	97685487	96658858	97685479	97685489	96658861	98670806
	315	48	97685478	97685487	96658858	97685479	97685489	96658861	98670806
	400	48	97685478	97685487	96658858	97685479	97685489	96658861	98670806
150-125-	200	38	97904635	97904640	96658837	97904637	97904641	96658839	98670805
	250	48	97685478	97685487	96658858	97685479	97685489	96658861	98670806
	315	48	97685478	97685487	96658858	97685479	97685489	96658861	98670806
	400	48	97685478	97685487	96658858	97685479	97685489	96658861	98670806
	500	60	97685541	97685569	97769928	97685546	97685573	97769930	98670808

Pump type		Shaft seal dia.	BQQE			BQQV			BQQV[1]
			MG1	MG12	MG13	MG1	MG12	MG13	MG13
200-150-	200	38	97904635	97904640	96658837	97904637	97904641	96658839	98670805
	250	48	97685478	97685487	96658858	97685479	97685489	96658861	98670806
	315.1	55	97685529	97685566	97769927	97685544	97685571	97769929	98670807
	315.2	55	97685529	97685566	97769927	97685544	97685571	97769929	98670807
	315	55	97685529	97685566	97769927	97685544	97685571	97769929	98670807
	400	55	97685529	97685566	97769927	97685544	97685571	97769929	98670807
	500	60	97685541	97685569	97769928	97685546	97685573	97769930	98670808
250-200-	400	55	-	-	-	-	-	-	-
	450	55	-	-	-	-	-	-	-
300-250-	350	55	-	-	-	-	-	-	-
	400	55	-	-	-	-	-	-	-
	450	60	-	-	-	-	-	-	-
	500	60	-	-	-	-	-	-	-

1) For 2-pole model only.

2) PWIS-free shaft seal.

Pump type		Shaft seal dia.	BBQE			BBQV			BQBE	GQQE	GQQV	DAQF
			MG1	MG12	MG13	MG1	MG12	MG13	RMG13	MG13S	MG13S	HJ92N
50-32-	125.1	28	97904605	97904610	96658829	97904606	97904611	97769886	96658830	-	-	96658831
	160.1	28	97904605	97904610	96658829	97904606	97904611	97769886	96658830	-	-	96658831
	200.1	28	97904605	97904610	96658829	97904606	97904611	97769886	96658830	-	-	96658831
	125	28	97904605	97904610	96658829	97904606	97904611	97769886	96658830	-	-	96658831
	160	28	97904605	97904610	96658829	97904606	97904611	97769886	96658830	-	-	96658831
	200	28	97904605	97904610	96658829	97904606	97904611	97769886	96658830	-	-	96658831
	250	38	97904638	97904642	96658850	97904639	97904643	97769888	96658830	-	-	96658852
65-50-	125	28	97904605	97904610	96658829	97904606	97904611	97769886	96658830	-	-	96658831
	160	28	97904605	97904610	96658829	97904606	97904611	97769886	96658830	-	-	96658831
65-40-	200	28	97904605	97904610	96658829	97904606	97904611	97769886	96658830	-	-	96658831
	250	38	97904638	97904642	96658850	97904639	97904643	97769888	96658851	-	-	96658852
	315	38	97904638	97904642	96658850	97904639	97904643	97769888	96658851	-	-	96658852
80-65-	125	28	97904605	97904610	96658829	97904606	97904611	97769886	96658830	-	-	96658831
	160	28	97904605	97904610	96658829	97904606	97904611	97769886	96658830	-	-	96658831
80-50-	200	28	97904605	97904610	96658829	97904606	97904611	97769886	96658830	-	-	96658831
	250	38	97904638	97904642	96658850	97904639	97904643	97769888	96658851	-	-	96658852
	315	38	97904638	97904642	96658850	97904639	97904643	97769888	96658851	-	-	96658852
100-80-	125	28	97904605	97904610	96658829	97904606	97904611	97769886	96658830	-	-	96658831
	160	38	97904638	97904642	96658850	97904639	97904643	97769888	96658851	-	-	96658852
100-65-	200	38	97904638	97904642	96658850	97904639	97904643	97769888	96658851	-	-	96658852
	250	38	97904638	97904642	96658850	97904639	97904643	97769888	96658851	-	-	96658852
	315	48	97685482	97685493	96658862	97685484	97685494	97769890	-	-	-	96658863
125-80-	160	38	97904638	97904642	96658850	97904639	97904643	97769888	96658851	-	-	96658852
	200	38	97904638	97904642	96658850	97904639	97904643	97769888	96658851	-	-	96658852
	250	38	97904638	97904642	96658850	97904639	97904643	97769888	96658851	-	-	96658852
	315	48	97685482	97685493	96658862	97685484	97685494	97769890	-	-	-	96658863
	400.1	48	-	-	96658862	-	-	97769890	-	-	-	96658863
	400	48	97685482	97685493	96658862	97685484	97685494	97769890	-	-	-	96658863
	400[3]	55	97685519	97685557	97769931	97685523	97685562	97769892	-	-	-	97536552
125-100-	160	38	97904638	97904642	96658850	97904639	97904643	97769888	96658851	-	-	96658852
	200	38	97904638	97904642	96658850	97904639	97904643	97769888	96658851	-	-	96658852
	250	48	97685482	97685493	96658862	97685484	97685494	97769890	-	-	-	96658863
	315	48	97685482	97685493	96658862	97685484	97685494	97769890	-	-	-	96658863
	400	48	97685482	97685493	96658862	97685484	97685494	97769890	-	-	-	96658863

Pump type		Shaft seal dia.	BBQE			BBQV			BQBE	GQQE	GQQV	DAQF
			MG1	MG12	MG13	MG1	MG12	MG13	RMG13	MG13S	MG13S	HJ92N
150-125-	200	38	97904638	97904642	96658850	97904639	97904643	97769888	96658851	-	-	96658852
	250	48	97685482	97685493	96658862	97685484	97685494	97769890	-	-	-	96658863
	315	48	97685482	97685493	96658862	97685484	97685494	97769890	-	-	-	96658863
	400	48	97685482	97685493	96658862	97685484	97685494	97769890	-	-	-	96658863
	500	60	97685521	97685559	97769932	97685527	97685564	97769894	-	-	-	97536595
200-150-	200	38	97904638	97904642	96658850	97904639	97904643	97769888	96658851	-	-	96658852
	250	48	97685482	97685493	96658862	97685484	97685494	97769890	-	-	-	96658863
	315.1	55	97685519	97685557	97769931	97685523	97685562	97769892	-	-	-	97536552
	315.2	55	97685519	97685557	97769931	97685523	97685562	97769892	-	-	-	97536552
	315	55	97685519	97685557	97769931	97685523	97685562	97769892	-	-	-	97536552
	400	55	97685519	97685557	97769931	97685523	97685562	97769892	-	-	-	97536552
	500	60	97685521	97685559	97769932	97685527	97685564	97769894	-	-	-	97536595
250-200-	400	55	-	-	-	-	-	-	-	-	-	-
	450	55	-	-	-	-	-	-	-	-	-	-
300-250-	350	55	-	-	-	-	-	-	-	-	-	-
	400	55	-	-	-	-	-	-	-	-	-	-
	450	60	-	-	-	-	-	-	-	-	-	-
	500	60	-	-	-	-	-	-	-	-	-	-

3) For 2-pole model only.

Pump type		Shaft seal dia.	DQQE	DQQK	DQQV	DQQX	AQQE	AQQK	AQQV	AQQX	AQAE	AQAV
			HJ977GN	HJ977GN	HJ977GN	HJ977GN	M7N	M7N	M7N	M7N	M7N	M7N
50-32-	125.1	28	97769896	97769912	97769900	97769908	96658834	97769916	96658835	97769904	96658832	96658833
	160.1	28	97769896	97769912	97769900	97769908	96658834	97769916	96658835	97769904	96658832	96658833
	200.1	28	97769896	97769912	97769900	97769908	96658834	97769916	96658835	97769904	96658832	96658833
	125	28	97769896	97769912	97769900	97769908	96658834	97769916	96658835	97769904	96658832	96658833
	160	28	97769896	97769912	97769900	97769908	96658834	97769916	96658835	97769904	96658832	96658833
	200	28	97769896	97769912	97769900	97769908	96658834	97769916	96658835	97769904	96658832	96658833
	250	38	97769898	97769914	97769902	97769910	96658855	97769918	96658856	97769906	96658853	96658854
65-50-	125	28	97769896	97769912	97769900	97769908	96658834	97769916	96658835	97769904	96658832	96658833
	160	28	97769896	97769912	97769900	97769908	96658834	97769916	96658835	97769904	96658832	96658833
65-40-	200	28	97769896	97769912	97769900	97769908	96658834	97769916	96658835	97769904	96658832	96658833
	250	38	97769898	97769914	97769902	97769910	96658855	97769918	96658856	97769906	96658853	96658854
	315	38	97769898	97769914	97769902	97769910	96658855	97769918	96658856	97769906	96658853	96658854
80-65-	125	28	97769896	97769912	97769900	97769908	96658834	97769916	96658835	97769904	96658832	96658833
	160	28	97769896	97769912	97769900	97769908	96658834	97769916	96658835	97769904	96658832	96658833
80-50-	200	28	97769896	97769912	97769900	97769908	96658834	97769916	96658835	97769904	96658832	96658833
	250	38	97769898	97769914	97769902	97769910	96658855	97769918	96658856	97769906	96658853	96658854
	315	38	97769898	97769914	97769902	97769910	96658855	97769918	96658856	97769906	96658853	96658854
100-80-	125	28	97769896	97769912	97769900	97769908	96658834	97769916	96658835	97769904	96658832	96658833
	160	38	97769898	97769914	97769902	97769910	96658855	97769918	96658856	97769906	96658853	96658854
100-65-	200	38	97769898	97769914	97769902	97769910	96658855	97769918	96658856	97769906	96658853	96658854
	250	38	97769898	97769914	97769902	97769910	96658855	97769918	96658856	97769906	96658853	96658854
	315	48	97685510	97685518	97685513	97685515	96658866	97685505	96658867	97685502	96658864	96658865
125-80-	160	38	97769898	97769914	97769902	97769910	96658855	97769918	96658856	97769906	96658853	96658854
	200	38	97769898	97769914	97769902	97769910	96658855	97769918	96658856	97769906	96658853	96658854
	250	38	97769898	97769914	97769902	97769910	96658855	97769918	96658856	97769906	96658853	96658854
	315	48	97685510	97685518	97685513	97685515	96658866	97685505	96658867	97685502	96658864	96658865
	400.1	48	97685510	97685518	97685513	97685515	96658866	97685505	96658867	97685502	96658864	96658865
	400	48	97685510	97685518	97685513	97685515	96658866	97685505	96658867	97685502	96658864	96658865
	400 4)	55	97685597	97685609	97685601	97685605	97536543	97685589	97536544	97685585	97769923	97769925

Pump type		Shaft seal dia.	DQQE	DQQK	DQQV	DQQX	AQQE	AQQK	AQQV	AQQX	AQAE	AQAV
			HJ977GN	HJ977GN	HJ977GN	HJ977GN	M7N	M7N	M7N	M7N	M7N	M7N
125-100-	160	38	*97769898*	*97769914*	*97769902*	*97769910*	*96658855*	*97769918*	*96658856*	*97769906*	*96658853*	*96658854*
	200	38	*97769898*	*97769914*	*97769902*	*97769910*	*96658855*	*97769918*	*96658856*	*97769906*	*96658853*	*96658854*
	250	48	*97685510*	*97685518*	*97685513*	*97685515*	*96658866*	*97685505*	*96658867*	*97685502*	*96658864*	*96658865*
	315	48	*97685510*	*97685518*	*97685513*	*97685515*	*96658866*	*97685505*	*96658867*	*97685502*	*96658864*	*96658865*
	400	48	*97685510*	*97685518*	*97685513*	*97685515*	*96658866*	*97685505*	*96658867*	*97685502*	*96658864*	*96658865*
150-125-	200	38	*97769898*	*97769914*	*97769902*	*97769910*	*96658855*	*97769918*	*96658856*	*97769906*	*96658853*	*96658854*
	250	48	*97685510*	*97685518*	*97685513*	*97685515*	*96658866*	*97685505*	*96658867*	*97685502*	*96658864*	*96658865*
	315	48	*97685510*	*97685518*	*97685513*	*97685515*	*96658866*	*97685505*	*96658867*	*97685502*	*96658864*	*96658865*
	400	48	*97685510*	*97685518*	*97685513*	*97685515*	*96658866*	*97685505*	*96658867*	*97685502*	*96658864*	*96658865*
	500	60	*97685599*	*97685611*	*97685603*	*97685607*	*97536585*	*97685591*	*97536586*	*97685587*	*97769924*	*97769926*
200-150-	200	38	*97769898*	*97769914*	*97769902*	*97769910*	*96658855*	*97769918*	*96658856*	*97769906*	*96658853*	*96658854*
	250	48	*97685510*	*97685518*	*97685513*	*97685515*	*96658866*	*97685505*	*96658867*	*97685502*	*96658864*	*96658865*
	315.1	55	*97685597*	*97685609*	*97685601*	*97685605*	*97536543*	*97685589*	*97536544*	*97685585*	*97769923*	*97769925*
	315.2	55	*97685597*	*97685609*	*97685601*	*97685605*	*97536543*	*97685589*	*97536544*	*97685585*	*97769923*	*97769925*
	315	55	*97685597*	*97685609*	*97685601*	*97685605*	*97536543*	*97685589*	*97536544*	*97685585*	*97769923*	*97769925*
	400	55	*97685597*	*97685609*	*97685601*	*97685605*	*97536543*	*97685589*	*97536544*	*97685585*	*97769923*	*97769925*
	500	60	*97685599*	*97685611*	*97685603*	*97685607*	*97536585*	*97685591*	*97536586*	*97685587*	*97769924*	*97769926*
250-200-	400	55	-	-	-	-	-	-	-	-	-	-
	450	55	-	-	-	-	-	-	-	-	-	-
300-250-	350	55	-	-	-	-	-	-	-	-	-	-
	400	55	-	-	-	-	-	-	-	-	-	-
	450	60	-	-	-	-	-	-	-	-	-	-
	500	60	-	-	-	-	-	-	-	-	-	-

4) For 2-pole model only.

Spacer ring for shaft seal

Shaft seal arrangement, "S"

NKG 50-32 -125 .1 A1 F 2 N V (S) BAQV

(pos. 105b and 105c)

28, 48, 55 and 60 mm

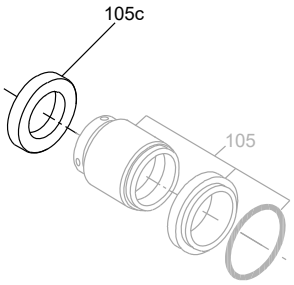

HJ92N, M7N, HJ977GN

38 mm

Design 1

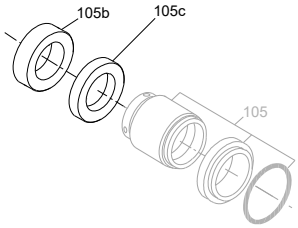

HJ92N, M7N, HJ977GN

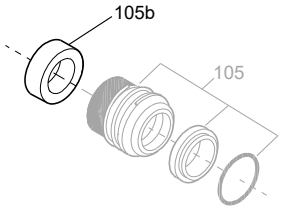

MG13, RMG13

Design 2

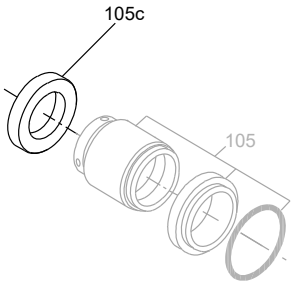

HJ92N, M7N, HJ977GN

Pos.	Shaft seal diameter [mm]	Description	Length [mm]	Material code	
				A, B, C, D, E, F G, H, K, M, N, P, S	I, J, L, R, T, U, W
105b	38	Spacer ring	15.5	*96591277*	*96938601*
105c	28		7.5	*96938597*	*96938598*
	38		10	*96938599*	*96938600*
	48		15	*96938602*	*96938603*
	55		22.5	*96938604*	*96938605*
	60		17.5	*96938606*	*96938607*
105b and 1050c	38		15.5	*96930797*	*96930799*
			10		

38 mm spacer ring			
Pump type		Shaft seal dia.	Design
50-32-	125.1	28	-
	160.1	28	-
	200.1	28	-
	125	28	-
	160	28	-
	200	28	-
	250	38	2
65-50-	125	28	-
	160	28	-
65-40-	200	28	-
	250	38	2
	315	38	2
80-65-	125	28	-
	160	28	-
80-50-	200	28	-
	250	38	2
	315	38	1
100-80-	125	28	-
	160	38	2
100-65-	200	38	2
	250	38	1
	315	48	-
125-80-	160	38	2
	200	38	1
	250	38	1
	315	48	-
	400	48	-
125-100-	160	38	2
	200	38	1
	250	48	-
	315	48	-
	400	48	-
150-125-	200	38	1
	250	48	-
	315	48	-
	400	48	-
	500	60	-
200-150-	200	38	1
	250	48	-
	315.1	48/55	-
	315.2	48/55	-
	315	55	-
	400	55	-
	500	60	-
250-200-	400	48	-
	450	48	-
300-250-	350	48	-
	400	48	-
	450	60	-
	500	60	-

Shaft seal arrangements, "O" and "P"

NKG 125-100-160/160-142 H2 F 3 N KE (O) (P) 2926

(pos. 105d, 112 and 112a)

28, 38, 48, 55 and 60 mm	55 and 60 mm
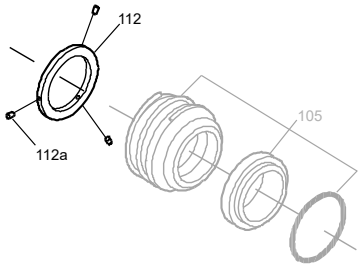	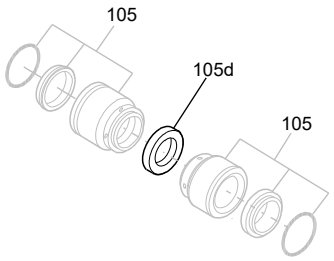
MG1	*HJ92N, M7N, HJ977GN*

Spacer ring

Pos.	Shaft seal diameter [mm]	Description	Length [mm]	Material code	
				A, B, C, D, E, F G, H, K, M, N, P, S	I, J, L, R, T, U, W
112 + 112a	28	Spacer ring	8.5	*97931570*	*97931570*
	38		6	*97931581*	*97931581*
	48		5.5	*97757584*	*97757584*
	55		5.5	*97757652*	*97757652*
	60		5.5	*97757653*	*97757653*
105d	55		4	*97757654*	*97757654*
	60		2	*97757655*	*97757655*

O-ring

Shaft seal arrangement, single seal "S" and stuffing box "B"

NKG	50-32	-125	.1	A1	F	2	N	V	S	BAQV

NKG	50-32	-125	.1	A1	F	2	N	V	B	SNEA

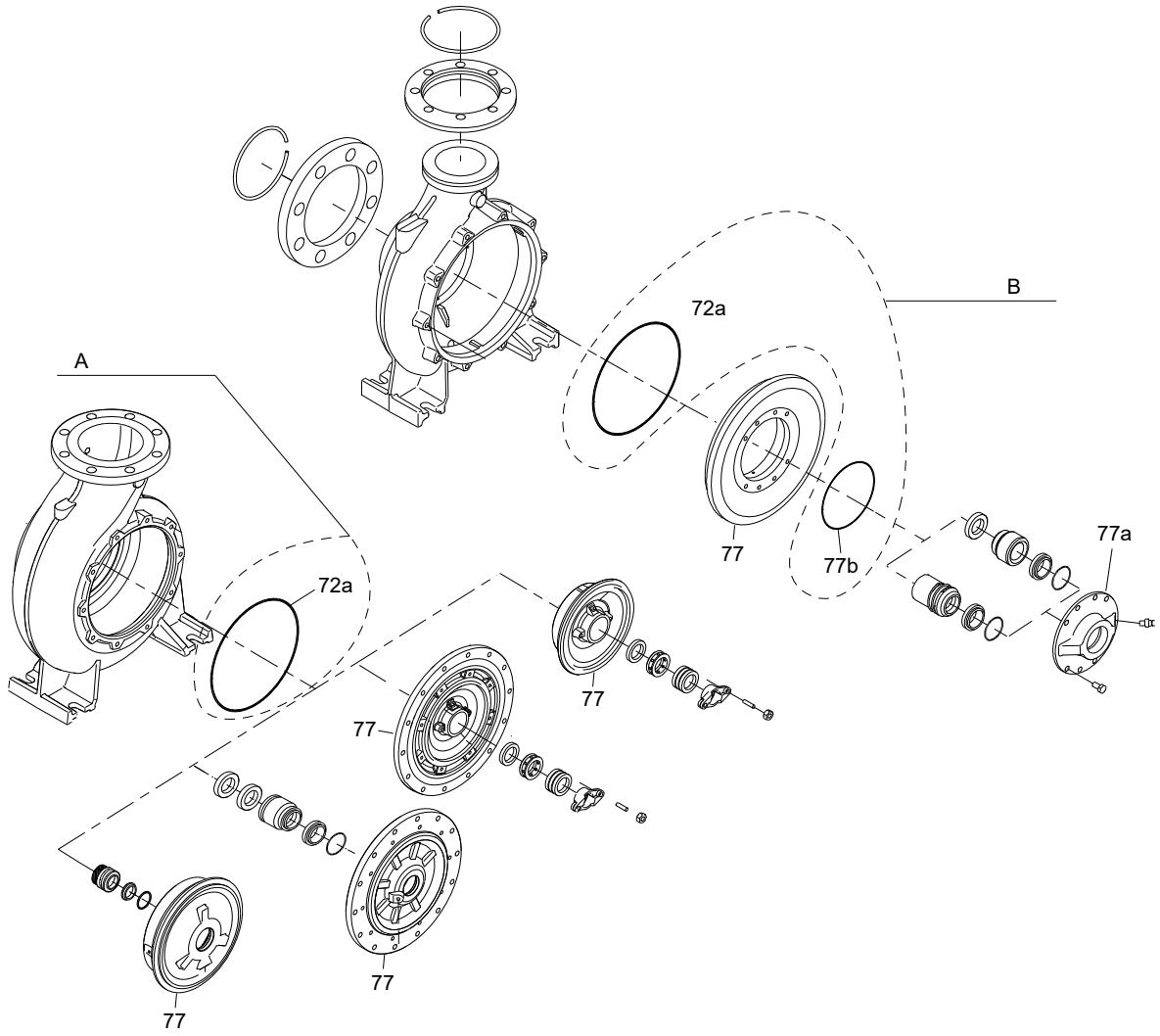

Pos.	Description
A	Example 1
B	Example 2

	Content		
	Pos.		
	Kit 1	72a	1 x O-ring
	Kit 2	77b	1 x O-ring

The O-ring materials can be found in the type designation on the nameplate.

Code	Material
E	EPDM
M	FEPS
K	FFKM
V	FKM
F	FXM
X	HNBR

Example 1 - pump with cover, pos. 77 only

NKG	50-32	-125	.1	A1	F	2	N	(V)	S	BAQV

Code V describes a pump with O-ring kit 1 containing an FKM O-ring (V).

Example 2 - pump with cover, pos. 77 and 77a

NKG	50-32	-125	.1	A1	F	2	N	(V)	S	BAQV

Code V describes a pump with cover 77 and 77a with O-ring kit 1 + 2 containing FKM O-rings (V).

Shaft seal arrangements, "O", "P", "C" and "D"

NKG 125-100-160/160-142 H2 F 3 N KE (O P C D) 2926

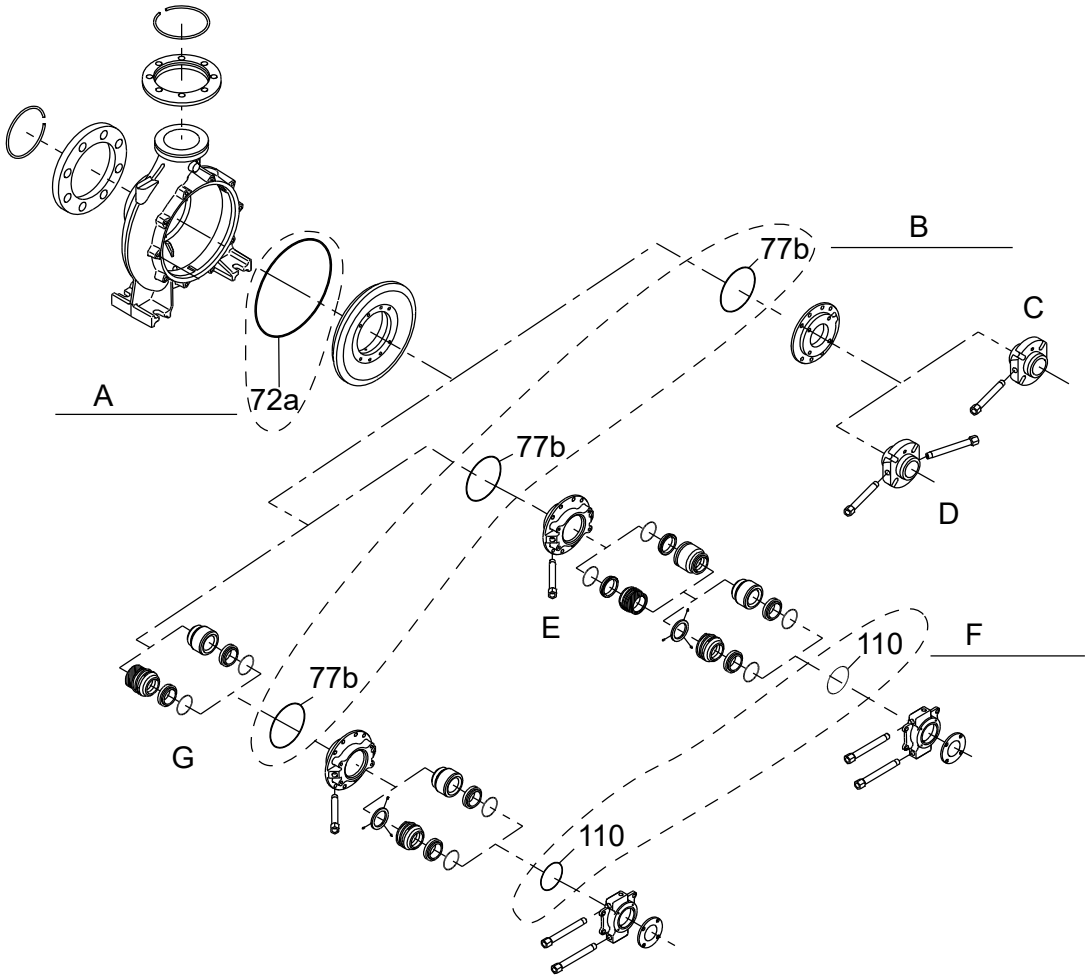

Pos.	Description
A	O-ring kit 1
B	O-ring kit 2
C	Single cartridge
D	Double cartridge
E	Double seal, back to back
F	O-ring kit 3
G	Double seal, tandem

	Content	
Pos.		
Kit 1	72a	1 x O-ring
Kit 2	77b	1 x O-ring
Kit 3	110	1 x O-ring

The O-ring materials can be found in the type designation on the nameplate.

Code	Material
E	EPDM
M	FEPS
K	FFKM
V	FKM
F	FXM
X	HNBR

Example 1

NKG 125-100-160/160-142 H2 F 3 N(F/D)C DAQF

Code with one letter describes a pump with O-ring kit 1 + 2.

Code F describes a pump with O-ring kit 1 + 2 of FXM (F).

Example 2

NKG 125-100-160/160-142 H2 F 3 N KE(O/P)2926

Code with two letters describes a pump with O-ring kit 1 + 2 + 3.

Code KE describes a pump with O-ring kit 1 + 2 of FFKM (K) and O-ring kit 3 of EPDM (E).

Pump type		O-ring kit 1 (pos. 72a)					
		E (EPDM)	M (FEPS)	K (FFKM)	V (FKM)	F (FXM)	X (HNBR)
50-32-	125.1	*97757659*	*97904673*	*97904674*	*97757697*	*97790022*	*97904675*
	160.1	*97757659*	*97904673*	*97904674*	*97757697*	*97790022*	*97904675*
	200.1	*97757671*	*97904679*	*97904691*	*97757698*	*97790080*	*97904692*
	125	*97757659*	*97904673*	*97904674*	*97757697*	*97790022*	*97904675*
	160	*97757659*	*97904673*	*97904674*	*97757697*	*97790022*	*97904675*
	200	*97757671*	*97904679*	*97904691*	*97757698*	*97790080*	*97904692*
	250	*97757672*	*97904676*	*97904677*	*97757699*	*97790081*	*97904678*
65-50-	125	*97757659*	*97904673*	*97904674*	*97757697*	*97790022*	*97904675*
	160	*97757659*	*97904673*	*97904674*	*97757697*	*97790022*	*97904675*
65-40-	200	*97757671*	*97904679*	*97904691*	*97757698*	*97790080*	*97904692*
	250	*97757672*	*97904676*	*97904677*	*97757699*	*97790081*	*97904678*
	315	*97757675*	*96887770*	*96887761*	*97757705*	*96887764*	*96887767*
80-65-	125	*97757659*	*97904673*	*97904674*	*97757697*	*97790022*	*97904675*
	160	*97757659*	*97904673*	*97904674*	*97757697*	*97790022*	*97904675*
80-50-	200	*97757671*	*97904679*	*97904691*	*97757698*	*97790080*	*97904692*
	250	*97757672*	*97904676*	*97904677*	*97757699*	*97790081*	*97904678*
	315	*97757675*	*96887770*	*96887761*	*97757705*	*96887764*	*96887767*
100-80-	125	*97757659*	*97904673*	*97904674*	*97757697*	*97790022*	*97904675*
	160	*97757659*	*97904673*	*97904674*	*97757697*	*97790022*	*97904675*
100-65-	200	*97757671*	*97904679*	*97904691*	*97757698*	*97790080*	*97904692*
	250	*97757673*	*96887769*	*96887760*	*97757703*	*96887763*	*96887766*
	315	*97757675*	*96887770*	*96887761*	*97757705*	*96887764*	*96887767*
125-80-	160	*97757659*	*97904673*	*97904674*	*97757697*	*97790022*	*97904675*
	200	*97757671*	*97904679*	*97904691*	*97757698*	*97790080*	*97904692*
	250	*97757673*	*96887769*	*96887760*	*97757703*	*96887763*	*96887766*
	315	*97757675*	*96887770*	*96887761*	*97757705*	*96887764*	*96887767*
	400.1	*97757676*	*96887771*	*96887762*	*97757707*	*96887765*	*96887768*
	400	*97757676*	*96887771*	*96887762*	*97757707*	*96887765*	*96887768*

Pump type		O-ring kit 1 (pos. 72a)					
		E (EPDM)	M (FEPS)	K (FFKM)	V (FKM)	F (FXM)	X (HNBR)
125-100-	160	97757659	97904673	97904674	97757697	97790022	97904675
	200	97757671	97904679	97904691	97757698	97790080	97904692
	250	97757673	96887769	96887760	97757703	96887763	96887766
	315	97757675	96887770	96887761	97757705	96887764	96887767
	400	97757676	96887771	96887762	97757707	96887765	96887768
150-125-	200	97757671	97904679	97904691	97757698	97790080	97904692
	250	97757673	96887769	96887760	97757703	96887763	96887766
	315	97757675	96887770	96887761	97757705	96887764	96887767
	400	97757676	96887771	96887762	97757707	96887765	96887768
	500	97757679	97536641	97536606	97757712	97536608	97536609
200-150-	200	97757671	97904679	97904691	97757698	97790080	97904692
	250	97757673	96887769	96887760	97757703	96887763	96887766
	315.1	97757675	96887770	96887761	97757705	96887764	96887767
	315.2	97757675	96887770	96887761	97757705	96887764	96887767
	315	97757675	96887770	96887761	97757705	96887764	96887767
	400	97757676	96887771	96887762	97757707	96887765	96887768
	500	97757679	97536641	97536606	97757712	97536608	97536609
250-200-	400	97757676	-	-	97757707	96887765	-
	450	97757677	-	-	97757708	97790102	-
300-250-	350	97757676	-	-	97757707	96887765	-
	400	97757676	-	-	97757707	96887765	-
	450	97757677	-	-	97757708	97790102	-
	500	97757679	-	-	97757712	97536608	-

Pump type		O-ring kit 2 (pos. 77b)					
		E (EPDM)	M (FEPS)	K (FFKM)	V (FKM)	F (FXM)	X (HNBR)
50-32-	125.1	97761203	97685619	97685617	97761204	97685616	97685618
	160.1	97761203	97685619	97685617	97761204	97685616	97685618
	200.1	97761203	97685619	97685617	97761204	97685616	97685618
	125	97761203	97685619	97685617	97761204	97685616	97685618
	160	97761203	97685619	97685617	97761204	97685616	97685618
	200	97761203	97685619	97685617	97761204	97685616	97685618
	250	97761203	97685619	97685617	97761204	97685616	97685618
65-50-	125	97761203	97685619	97685617	97761204	97685616	97685618
	160	97761203	97685619	97685617	97761204	97685616	97685618
65-40-	200	97761203	97685619	97685617	97761204	97685616	97685618
	250	97761203	97685619	97685617	97761204	97685616	97685618
	315	97761203	97685619	97685617	97761204	97685616	97685618
80-65-	125	97761203	97685619	97685617	97761204	97685616	97685618
	160	97761203	97685619	97685617	97761204	97685616	97685618
80-50-	200	97761203	97685619	97685617	97761204	97685616	97685618
	250	97761203	97685619	97685617	97761204	97685616	97685618
	315	97761203	97685619	97685617	97761204	97685616	97685618
100-80-	125	97761203	97685619	97685617	97761204	97685616	97685618
	160	97761203	97685619	97685617	97761204	97685616	97685618
100-65-	200	97761203	97685619	97685617	97761204	97685616	97685618
	250	97761203	97685619	97685617	97761204	97685616	97685618
	315	97757693	96887775	96887772	97757714	96887773	96887774

Pump type		O-ring kit 2 (pos. 77b)					
		E (EPDM)	M (FEPS)	K (FFKM)	V (FKM)	F (FXM)	X (HNBR)
125-80-	160	97761203	97685619	97685617	97761204	97685616	97685618
	200	97761203	97685619	97685617	97761204	97685616	97685618
	250	97761203	97685619	97685617	97761204	97685616	97685618
	315	97757693	96887775	96887772	97757714	96887773	96887774
	400.1	97757693	96887775	96887772	97757714	96887773	96887774
	400	97757693	96887775	96887772	97757714	96887773	96887774
125-100-	160	97761203	97685619	97685617	97761204	97685616	97685618
	200	97761203	97685619	97685617	97761204	97685616	97685618
	250	97757693	96887775	96887772	97757714	96887773	96887774
	315	97757693	96887775	96887772	97757714	96887773	96887774
	400	97757693	96887775	96887772	97757714	96887773	96887774
150-125-	200	97761203	97685619	97685617	97761204	97685616	97685618
	250	97757693	96887775	96887772	97757714	96887773	96887774
	315	97757693	96887775	96887772	97757714	96887773	96887774
	400	97757693	96887775	96887772	97757714	96887773	96887774
	500	97757693	96887775	96887772	97757714	96887773	96887774
200-150-	200	97761203	97685619	97685617	97761204	97685616	97685618
	250	97757693	96887775	96887772	97757714	96887773	96887774
	315.1	97757693	96887775	96887772	97757714	96887773	96887774
	315.2	97757693	96887775	96887772	97757714	96887773	96887774
	315	97757693	96887775	96887772	97757714	96887773	96887774
	400	97757693	96887775	96887772	97757714	96887773	96887774
	500	97757693	96887775	96887772	97757714	96887773	96887774
250-200-	400	-	-	-	-	-	-
	450	-	-	-	-	-	-
300-250-	350	-	-	-	-	-	-
	400	-	-	-	-	-	-
	450	-	-	-	-	-	-
	500	-	-	-	-	-	-

Pump type		O-ring kit 3 (pos. 110)					
		E (EPDM)	M (FEPS)	K (FFKM)	V (FKM)	F (FXM)	X (HNBR)
50-32-	125.1	97904663	97904671	97904668	97904666	97904667	97904669
	160.1	97904663	97904671	97904668	97904666	97904667	97904669
	200.1	97904663	97904671	97904668	97904666	97904667	97904669
	125	97904663	97904671	97904668	97904666	97904667	97904669
	160	97904663	97904671	97904668	97904666	97904667	97904669
	200	97904663	97904671	97904668	97904666	97904667	97904669
	250	97904647	97904660	97904650	97904648	97904649	97904659
65-50-	125	97904663	97904671	97904668	97904666	97904667	97904669
	160	97904663	97904671	97904668	97904666	97904667	97904669
65-40-	200	97904663	97904671	97904668	97904666	97904667	97904669
	250	97904647	97904660	97904650	97904648	97904649	97904659
	315	97904647	97904660	97904650	97904648	97904649	97904659
80-65-	125	97904663	97904671	97904668	97904666	97904667	97904669
	160	97904663	97904671	97904668	97904666	97904667	97904669
80-50-	200	97904663	97904671	97904668	97904666	97904667	97904669
	250	97904647	97904660	97904650	97904648	97904649	97904659
	315	97904647	97904660	97904650	97904648	97904649	97904659
100-80-	125	97904663	97904671	97904668	97904666	97904667	97904669
	160	97904647	97904660	97904650	97904648	97904649	97904659

Pump type		O-ring kit 3 (pos. 110)					
		E (EPDM)	M (FEPS)	K (FFKM)	V (FKM)	F (FXM)	X (HNBR)
100-65-	200	*97904647*	*97904660*	*97904650*	*97904648*	*97904649*	*97904659*
	250	*97904647*	*97904660*	*97904650*	*97904648*	*97904649*	*97904659*
	315	*97757691*	*97685614*	*97685615*	*97757713*	*97685612*	*97685613*
125-80-	160	*97904647*	*97904660*	*97904650*	*97904648*	*97904649*	*97904659*
	200	*97904647*	*97904660*	*97904650*	*97904648*	*97904649*	*97904659*
	250	*97904647*	*97904660*	*97904650*	*97904648*	*97904649*	*97904659*
	315	*97757691*	*97685614*	*97685615*	*97757713*	*97685612*	*97685613*
	400.1	*97757691*	*97685614*	*97685615*	*97757713*	*97685612*	*97685613*
	400	*97757691*	*97685614*	*97685615*	*97757713*	*97685612*	*97685613*
125-100-	160	*97904647*	*97904660*	*97904650*	*97904648*	*97904649*	*97904659*
	200	*97904647*	*97904660*	*97904650*	*97904648*	*97904649*	*97904659*
	250	*97757691*	*97685614*	*97685615*	*97757713*	*97685612*	*97685613*
	315	*97757691*	*97685614*	*97685615*	*97757713*	*97685612*	*97685613*
	400	*97757691*	*97685614*	*97685615*	*97757713*	*97685612*	*97685613*
150-125-	200	*97904647*	*97904660*	*97904650*	*97904648*	*97904649*	*97904659*
	250	*97757691*	*97685614*	*97685615*	*97757713*	*97685612*	*97685613*
	315	*97757691*	*97685614*	*97685615*	*97757713*	*97685612*	*97685613*
	400	*97757691*	*97685614*	*97685615*	*97757713*	*97685612*	*97685613*
	500	*97761203*	*97685619*	*97685617*	*97761204*	*97685616*	*97685618*
200-150-	200	*97904647*	*97904660*	*97904650*	*97904648*	*97904649*	*97904659*
	250	*97757691*	*97685614*	*97685615*	*97757713*	*97685612*	*97685613*
	315.1	*97757691*	*97685614*	*97685615*	*97757713*	*97685612*	*97685613*
	315.2	*97757691*	*97685614*	*97685615*	*97757713*	*97685612*	*97685613*
	315	*97761203*	*97685619*	*97685617*	*97761204*	*97685616*	*97685618*
	400	*97761203*	*97685619*	*97685617*	*97761204*	*97685616*	*97685618*
	500	*97761203*	*97685619*	*97685617*	*97761204*	*97685616*	*97685618*
250-200-	400	-	-	-	-	-	-
	450	-	-	-	-	-	-
300-250-	350	-	-	-	-	-	-
	400	-	-	-	-	-	-
	450	-	-	-	-	-	-
	500	-	-	-	-	-	-

Stuffing box, shaft sleeve and gland

Stuffing box	Shaft sleeve	Gland
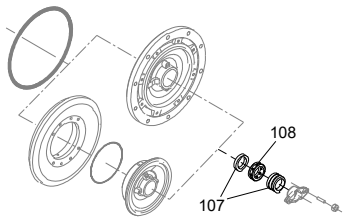	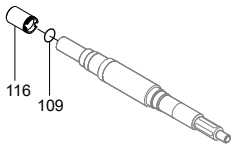	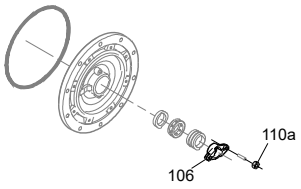
107:Packing rings 108:1 x distribution ring (SNE/SNF)	109:1 x O-ring 116:1 x shaft sleeve	106:2 x gland 110a:2 x nut

Pump type		Material code	A, B, C, D, E, F, G, H, S, T						
		Shaft seal arrangement	B						
		Pump shaft diameter d5	Stuffing box for cast iron pump				Shaft sleeve		Gland
			SNEA, SNEC, SNFA, SNFC	SNEB, SNED, SNFB, SNFD	SNOA, SNOC	SNOB, SNOD	E (EPDM)	V (FKM)	
50-32-	125.1	24	96877095	96877097	96877099	96877101	96861484	98796245	96861467
	160.1	24	96877095	96877097	96877099	96877101	96861484	98796245	96861467
	200.1	24	96877095	96877097	96877099	96877101	96861484	98796245	96861467
	125	24	96877095	96877097	96877099	96877101	96861484	98796245	96861467
	160	24	96877095	96877097	96877099	96877101	96861484	98796245	96861467
	200	24	96877095	96877097	96877099	96877101	96861484	98796245	96861467
	250	32	96877123	96877125	96877127	96877129	96861485	98796246	96861469
65-50-	125	24	96877095	96877097	96877099	96877101	96861484	98796245	96861467
	160	24	96877095	96877097	96877099	96877101	96861484	98796245	96861467
65-40-	200	24	96877095	96877097	96877099	96877101	96861484	98796245	96861467
	250	32	96877123	96877125	96877127	96877129	96861485	98796246	96861469
	315	32	96877123	96877125	96877127	96877129	96861485	98796246	96861469
80-65-	125	24	96877095	96877097	96877099	96877101	96861484	98796245	96861467
	160	24	96877095	96877097	96877099	96877101	96861484	98796245	96861467
80-50-	200	24	96877095	96877097	96877099	96877101	96861484	98796245	96861467
	250	32	96877123	96877125	96877127	96877129	96861485	98796246	96861469
	315	32	96877123	96877125	96877127	96877129	96861485	98796246	96861469
100-80-	125	24	96877095	96877097	96877099	96877101	96861484	98796245	96861467
	160	32	96877123	96877125	96877127	96877129	96861485	98796246	96861469
100-65-	200	32	96877123	96877125	96877127	96877129	96861485	98796246	96861469
	250	32	96877123	96877125	96877127	96877129	96861485	98796246	96861469
	315	42	98796172	98796173	98796176	98796177	98796233	98796160	98796251
125-80-	160	32	96877123	96877125	96877127	96877129	96861485	98796246	96861469
	200	32	96877123	96877125	96877127	96877129	96861485	98796246	96861469
	250	32	96877123	96877125	96877127	96877129	96861485	98796246	96861469
	315	42	98796172	98796173	98796176	98796177	98796233	98796160	98796251
	400.1	42	98796172	98796173	98796176	98796177	98796233	98796160	98796251
	400	42	98796172	98796173	98796176	98796177	98796233	98796160	98796251
	400 [1)]	48	98796180	98796181	98796184	98796185	98796236	98796223	98796253
125-100-	160	32	96877123	96877125	96877127	96877129	96861485	98796246	96861469
	200	32	96877123	96877125	96877127	96877129	96861485	98796246	96861469
	250	42	98796172	98796173	98796176	98796177	98796233	98796160	98796251
	315	42	98796172	98796173	98796176	98796177	98796233	98796160	98796251
	400	42	98796172	98796173	98796176	98796177	98796233	98796160	98796251

Pump type		Material code	A, B, C, D, E, F, G, H, S, T						
		Shaft seal arrangement	B						
		Pump shaft diameter d5	Stuffing box for cast iron pump				Shaft sleeve		Gland
			SNEA, SNEC, SNFA, SNFC	SNEB, SNED, SNFB, SNFD	SNOA, SNOC	SNOB, SNOD	E (EPDM)	V (FKM)	
150-125-	200	32	96877123	96877125	96877127	96877129	96861485	98796246	96861469
	250	42	98796172	98796173	98796176	98796177	98796233	98796160	98796251
	315	42	98796172	98796173	98796176	98796177	98796233	98796160	98796251
	400	42	98796172	98796173	98796176	98796177	98796233	98796160	98796251
	500	60	98796188	98796189	98796192	98796193	98796239	98796226	98796255
200-150-	200	32	96877123	96877125	96877127	96877129	96861485	98796246	96861469
	250	42	98796172	98796173	98796176	98796177	98796233	98796160	98796251
	315.1	48	98796180	98796181	98796184	98796185	98796236	98796223	98796253
	315.2	48	98796180	98796181	98796184	98796185	98796236	98796223	98796253
	315	48	98796180	98796181	98796184	98796185	98796236	98796223	98796253
	400	48	98796180	98796181	98796184	98796185	98796236	98796223	98796253
	500	60	98796188	98796189	98796192	98796193	98796239	98796226	98796255
250-200-	400	48	98796180	98796181	98796184	98796185	98796236	98796223	98796253
	450	48	98796180	98796181	98796184	98796185	98796236	98796223	98796253
300-250-	350	48	98796180	98796181	98796184	98796185	98796236	98796223	98796253
	400	48	98796180	98796181	98796184	98796185	98796236	98796223	98796253
	450	60	98796188	98796189	98796192	98796193	98796239	98796226	98796255
	500	60	98796188	98796189	98796192	98796193	98796239	98796226	98796255

1) For 2-pole model only.

Pump type		Material code	I, J, K, M, N, P, U, W						
		Shaft seal arrangement	B						
		Pump shaft diameter d5	Stuffing box for 1.4408 pump				Shaft sleeve		Gland
			SNEA, SNEC, SNFA, SNFC	SNEB, SNED, SNFB, SNFD	SNOA, SNOC	SNOB, SNOD	E (EPDM)	V (FKM)	
50-32-	125.1	24	98796196	98796197	96877099	96877101	98796242	98796229	98796247
	160.1	24	98796196	98796197	96877099	96877101	98796242	98796229	98796247
	200.1	24	98796196	98796197	96877099	96877101	98796242	98796229	98796247
	125	24	98796196	98796197	96877099	96877101	98796242	98796229	98796247
	160	24	98796196	98796197	96877099	96877101	98796242	98796229	98796247
	200	24	98796196	98796197	96877099	96877101	98796242	98796229	98796247
	250	32	98796200	98796201	96877127	96877129	98796244	98796231	98796249
65-50-	125	24	98796196	98796197	96877099	96877101	98796242	98796229	98796247
	160	24	98796196	98796197	96877099	96877101	98796242	98796229	98796247
65-40-	200	24	98796196	98796197	96877099	96877101	98796242	98796229	98796247
	250	32	98796200	98796201	96877127	96877129	98796244	98796231	98796249
	315	32	98796200	98796201	96877127	96877129	98796244	98796231	98796249
80-65-	125	24	98796196	98796197	96877099	96877101	98796242	98796229	98796247
	160	24	98796196	98796197	96877099	96877101	98796242	98796229	98796247
80-50-	200	24	98796196	98796197	96877099	96877101	98796242	98796229	98796247
	250	32	98796200	98796201	96877127	96877129	98796244	98796231	98796249
	315	32	98796200	98796201	96877127	96877129	98796244	98796231	98796249
100-80-	125	24	98796196	98796197	96877099	96877101	98796242	98796229	98796247
	160	32	98796200	98796201	96877127	96877129	98796244	98796231	98796249
100-65-	200	32	98796200	98796201	96877127	96877129	98796244	98796231	98796249
	250	32	98796200	98796201	96877127	96877129	98796244	98796231	98796249
	315	42	98796204	98796205	98796176	98796177	98796234	98796221	98796251

Pump type		Material code	I, J, K, M, N, P, U, W						
		Shaft seal arrangement	B						
		Pump shaft diameter d5	Stuffing box for 1.4408 pump				Shaft sleeve		Gland
			SNEA, SNEC, SNFA, SNFC	SNEB, SNED, SNFB, SNFD	SNOA, SNOC	SNOB, SNOD	E (EPDM)	V (FKM)	
125-80-	160	32	98796200	98796201	96877127	96877129	98796244	98796231	98796249
	200	32	98796200	98796201	96877127	96877129	98796244	98796231	98796249
	250	32	98796200	98796201	96877127	96877129	98796244	98796231	98796249
	315	42	98796204	98796205	98796176	98796177	98796234	98796221	98796251
	400.1	42	98796204	98796205	98796176	98796177	98796234	98796221	98796251
	400	42	98796204	98796205	98796176	98796177	98796234	98796221	98796251
	400 [2)]	48	98796208	98796209	98796184	98796185	98796237	98796224	98796253
125-100-	160	32	98796200	98796201	96877127	96877129	98796244	98796231	98796249
	200	32	98796200	98796201	96877127	96877129	98796244	98796231	98796249
	250	42	98796204	98796205	98796176	98796177	98796234	98796221	98796251
	315	42	98796204	98796205	98796176	98796177	98796234	98796221	98796251
	400	42	98796204	98796205	98796176	98796177	98796234	98796221	98796251
150-125-	200	32	98796200	98796201	96877127	96877129	98796244	98796231	98796249
	250	42	98796204	98796205	98796176	98796177	98796234	98796221	98796251
	315	42	98796204	98796205	98796176	98796177	98796234	98796221	98796251
	400	42	98796204	98796205	98796176	98796177	98796234	98796221	98796251
	500	60	98796212	98796213	98796192	98796193	98796240	98796227	98796255
200-150-	200	32	98796200	98796201	96877127	96877129	98796244	98796231	98796249
	250	42	98796204	98796205	98796176	98796177	98796234	98796221	98796251
	315.1	48	98796208	98796209	98796184	98796185	98796237	98796224	98796253
	315.2	48	98796208	98796209	98796184	98796185	98796237	98796224	98796253
	315	48	98796208	98796209	98796184	98796185	98796237	98796224	98796253
	400	48	98796208	98796209	98796184	98796185	98796237	98796224	98796253
	500	60	98796212	98796213	98796192	98796193	98796240	98796227	98796255
250-200-	400	48	98796208	98796209	98796184	98796185	98796237	98796224	98796253
	450	48	98796208	98796209	98796184	98796185	98796237	98796224	98796253
300-250-	350	48	98796208	98796209	98796184	98796185	98796237	98796224	98796253
	400	48	98796208	98796209	98796184	98796185	98796237	98796224	98796253
	450	60	98796212	98796213	98796192	98796193	98796240	98796227	98796255
	500	60	98796212	98796213	98796192	98796193	98796240	98796227	98796255

2) For 2-pole model only.

Pump type		Material code	L, R						
		Shaft seal arrangement	B						
		Pump shaft diameter d5	Stuffing box for 1.4517 pump				Shaft sleeve		Gland
			SNEA, SNEC, SNFA, SNFC	SNEB, SNED, SNFB, SNFD	SNOA, SNOC	SNOB, SNOD	E (EPDM)	V (FKM)	
50-32-	125.1	24	98796196	98796197	96877099	96877101	98796243	98796230	98796248
	160.1	24	98796196	98796197	96877099	96877101	98796243	98796230	98796248
	200.1	24	98796196	98796197	96877099	96877101	98796243	98796230	98796248
	125	24	98796196	98796197	96877099	96877101	98796243	98796230	98796248
	160	24	98796196	98796197	96877099	96877101	98796243	98796230	98796248
	200	24	98796196	98796197	96877099	96877101	98796243	98796230	98796248
	250	32	98796200	98796201	96877127	96877129	98796232	98796159	98796250
65-50-	125	24	98796196	98796197	96877099	96877101	98796243	98796230	98796248
	160	24	98796196	98796197	96877099	96877101	98796243	98796230	98796248
65-40-	200	24	98796196	98796197	96877099	96877101	98796243	98796230	98796248
	250	32	98796200	98796201	96877127	96877129	98796232	98796159	98796250
	315	32	98796200	98796201	96877127	96877129	98796232	98796159	98796250

Pump type		Material code	L, R						
		Shaft seal arrangement	B						
		Pump shaft diameter d5	Stuffing box for 1.4517 pump				Shaft sleeve		Gland
			SNEA, SNEC, SNFA, SNFC	SNEB, SNED, SNFB, SNFD	SNOA, SNOC	SNOB, SNOD	E (EPDM)	V (FKM)	
80-65-	125	24	98796196	98796197	96877099	96877101	98796243	98796230	98796248
	160	24	98796196	98796197	96877099	96877101	98796243	98796230	98796248
80-50-	200	24	98796196	98796197	96877099	96877101	98796243	98796230	98796248
	250	32	98796200	98796201	96877127	96877129	98796232	98796159	98796250
	315	32	98796200	98796201	96877127	96877129	98796232	98796159	98796250
100-80-	125	24	98796196	98796197	96877099	96877101	98796243	98796230	98796248
	160	32	98796200	98796201	96877127	96877129	98796232	98796159	98796250
100-65-	200	32	98796200	98796201	96877127	96877129	98796232	98796159	98796250
	250	32	98796200	98796201	96877127	96877129	98796232	98796159	98796250
	315	42	98796204	98796205	98796176	98796177	98796235	98796222	98796252
125-80-	160	32	98796200	98796201	96877127	96877129	98796232	98796159	98796250
	200	32	98796200	98796201	96877127	96877129	98796232	98796159	98796250
	250	32	98796200	98796201	96877127	96877129	98796232	98796159	98796250
	315	42	98796204	98796205	98796176	98796177	98796235	98796222	98796252
	400.1	42	98796204	98796205	98796176	98796177	98796235	98796222	98796252
	400	42	98796204	98796205	98796176	98796177	98796235	98796222	98796252
	400 [3)]	48	98796208	98796209	98796184	98796185	98796238	98796225	98796254
125-100-	160	32	98796200	98796201	96877127	96877129	98796232	98796159	98796250
	200	32	98796200	98796201	96877127	96877129	98796232	98796159	98796250
	250	42	98796204	98796205	98796176	98796177	98796235	98796222	98796252
	315	42	98796204	98796205	98796176	98796177	98796235	98796222	98796252
	400	42	98796204	98796205	98796176	98796177	98796235	98796222	98796252
150-125-	200	32	98796200	98796201	96877127	96877129	98796232	98796159	98796250
	250	42	98796204	98796205	98796176	98796177	98796235	98796222	98796252
	315	42	98796204	98796205	98796176	98796177	98796235	98796222	98796252
	400	42	98796204	98796205	98796176	98796177	98796235	98796222	98796252
	500	60	98796212	98796213	98796192	98796193	98796241	98796228	98796256
200-150-	200	32	98796200	98796201	96877127	96877129	98796232	98796159	98796250
	250	42	98796204	98796205	98796176	98796177	98796235	98796222	98796252
	315.1	48	98796208	98796209	98796184	98796185	98796238	98796225	98796254
	315.2	48	98796208	98796209	98796184	98796185	98796238	98796225	98796254
	315	48	98796208	98796209	98796184	98796185	98796238	98796225	98796254
	400	48	98796208	98796209	98796184	98796185	98796238	98796225	98796254
	500	60	98796212	98796213	98796192	98796193	98796241	98796228	98796256
250-200-	400	48	98796208	98796209	98796184	98796185	98796238	98796225	98796254
	450	48	98796208	98796209	98796184	98796185	98796238	98796225	98796254
300-250-	350	48	98796208	98796209	98796184	98796185	98796238	98796225	98796254
	400	48	98796208	98796209	98796184	98796185	98796238	98796225	98796254
	450	60	98796212	98796213	98796192	98796193	98796241	98796228	98796256
	500	60	98796212	98796213	98796192	98796193	98796241	98796228	98796256

3) For 2-pole model only.

Stuffing box, shaft guard and pipe

Shaft guard	Pipe SNE	Pipe SNF
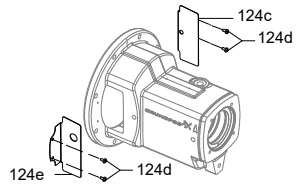	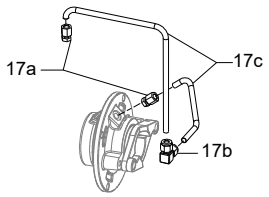	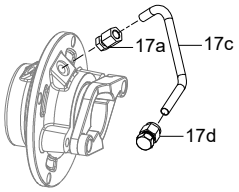
Kit, shaft guard	**Kit, pipe SNE**	**Kit, pipe SNF**
124c: 1 x shaft guard, left 124d: 4 x pan head screw 124e: 1 x shaft guard, right	17a: 2 x male connector, R1/8" - 8 mm 17b: 1 x union elbow, 8 mm - 8 mm 17c: 2 x pipe	17a: 1 x male connector, R1/8" - 8 mm 17c: 1 x pipe 17d: 1 x compression fitting, cap, 8 mm

Pump type		Pump shaft diameter d5	Kit, shaft guard								Kit, pipe	
			Single shaft seal	Double shaft seal	Stuffing box shaft seal							
					Cast iron pump housing			Stainless steel (1.4408, 1.4517) pump housing			Cast iron, stainless steel (1.4408) pump housing	
					SNO	SNE	SNF	SNO	SNE	SNF	SNE	SNF
50-32-	125.1	24	96809956	97904702	96809956	96809956	99089315	96809956	99089315	99089315		
	125	24	96809956	97904702	96809956	96809956	99089315	96809956	99089315	99089315		
	160.1	24	96809956	97904702	96809956	96809956	99089315	96809956	99089315	99089315		
	160	24	96809956	97904702	96809956	96809956	99089315	96809956	99089315	99089315		
	200.1	24	96809956	97904702	96809956	96809956	99089315	96809956	99089315	99089315		
	200	24	96809956	97904702	96809956	96809956	99089315	96809956	99089315	99089315		
	250	32	96809959	97929236	96809959	96809959	99089317	96809959	99089317	99089317		
65-50-	125	24	96809956	97904702	96809956	96809956	99089315	96809956	99089315	99089315		
	160	24	96809956	97904702	96809956	96809956	99089315	96809956	99089315	99089315		
65-40-	200	24	96809956	97904702	96809956	96809956	99089315	96809956	99089315	99089315		
	250	32	96809959	97929236	96809959	96809959	99089317	96809959	99089317	99089317		
	315	32	96809960	97929237	96809960	96809960	99089316	96809960	99089316	99089316		
80-65-	125	24	96809956	97904702	96809956	96809956	99089315	96809956	99089315	99089315		
	160	24	96809956	97904702	96809956	96809956	99089315	96809956	99089315	99089315		
80-50-	200	24	96809956	97904702	96809956	96809956	99089315	96809956	99089315	99089315		
	250	32	96809959	97929236	96809959	96809959	99089317	96809959	99089317	99089317		
	315	32	96809960	97929237	96809960	96809960	99089316	96809960	99089316	99089316		
100-80-	125	24	96809956	97904702	96809956	96809956	99089315	96809956	99089315	99089315	99001051	99001056
	160	32	96809959	97929236	96809959	96809959	99089317	96809959	99089317	99089317		
100-65-	200	32	96809959	97929236	96809959	96809959	99089317	96809959	99089317	99089317		
	250	32	96809960	97929237	96809960	96809960	99089316	96809960	99089316	99089316		
	315	42	96809961	96887370	96809961	96809961	99089323	96809961	99089323	99089323		
125-80-	160	32	96809959	97929236	96809959	96809959	99089317	96809959	99089317	99089317		
	200	32	96809960	97929237	96809960	96809960	99089316	96809960	99089316	99089316		
	250	32	96809960	97929237	96809960	96809960	99089316	96809960	99089316	99089316		
	315	42	96809961	96887370	96809961	96809961	99089323	96809961	99089323	99089323		
	400.1	42	96809961	96887370	96809961	96809961	99089323	96809961	99089323	99089323		
	400	42	96809961	96887370	96809961	96809961	99089323	96809961	99089323	99089323		
	400 [1)]	48	96809962	97536603	96809962	99089326	99089326	96809962	99089326	99089326		
125-100-	160	32	96809959	97929236	96809959	96809959	99089317	96809959	99089317	99089317		
	200	32	96809960	97929237	96809960	96809960	99089316	96809960	99089316	99089316		
	250	42	96809961	96887370	96809961	96809961	99089323	96809961	99089323	99089323		
	315	42	96809961	96887370	96809961	96809961	99089323	96809961	99089323	99089323		
	400	42	96809961	96887370	96809961	96809961	99089323	96809961	99089323	99089323		

Pump type		Pump shaft diameter d5	Kit, shaft guard								Kit, pipe	
			Single shaft seal	Double shaft seal	Stuffing box shaft seal							
					Cast iron pump housing			Stainless steel (1.4408, 1.4517) pump housing			Cast iron, stainless steel (1.4408) pump housing	
					SNO	SNE	SNF	SNO	SNE	SNF	SNE	SNF
150-125-	200	32	*96809960*	*97929237*	*96809960*	*96809960*	*99089316*	*96809960*	*99089316*	*99089316*		
	250	42	*96809961*	*96887370*	*96809961*	*96809961*	*99089323*	*96809961*	*99089323*	*99089323*		
	315	42	*96809961*	*96887370*	*96809961*	*96809961*	*99089323*	*96809961*	*99089323*	*99089323*		
	400	42	*96809961*	*96887370*	*96809961*	*96809961*	*99089323*	*96809961*	*99089323*	*99089323*		
	500	60	*96809962*	*97536603*	*96809962*	*99089326*	*99089326*	*96809962*	*99089326*	*99089326*		
200-150-	200	32	*96809960*	*97929237*	*96809960*	*96809960*	*99089316*	*96809960*	*99089316*	*99089316*		
	250	42	*96809961*	*96887370*	*96809961*	*96809961*	*99089323*	*96809961*	*99089323*	*99089323*		
	315.1	48	*96809962*	*97536603*	*96809962*	*99089326*	*99089326*	*96809962*	*99089326*	*99089326*		
	315.2	48	*96809962*	*97536603*	*96809962*	*99089326*	*99089326*	*96809962*	*99089326*	*99089326*		
	315	48	*96809962*	*97536603*	*96809962*	*99089326*	*99089326*	*96809962*	*99089326*	*99089326*		
	400	48	*96809962*	*97536603*	*96809962*	*99089326*	*99089326*	*96809962*	*99089326*	*99089326*		
	500	60	*96809962*	*97536603*	*96809962*	*99089326*	*99089326*	*96809962*	*99089326*	*99089326*		
250-200-	400	48	*96809962*	*97536603*	*96809962*	*99089325*	*99089325*	*96809962*	*99089326*	*99089326*		
	450	48	*96809962*	*97536603*	*96809962*	*99089325*	*99089325*	*96809962*	*99089326*	*99089326*		
300-250-	350	48	*96809962*	*97536603*	*96809962*	*99089325*	*99089325*	*96809962*	*99089326*	*99089326*		
	400	48	*96809962*	*97536603*	*96809962*	*99089325*	*99089325*	*96809962*	*99089326*	*99089326*		
	450	60	*96809962*	*97536603*	*96809962*	*99089325*	*99089325*	*96809962*	*99089325*	*99089325*		
	500	60	*96809962*	*97536603*	*96809962*	*99089325*	*99089325*	*96809962*	*99089325*	*99089325*		

1) Oversize pump.

Shaft

Shaft, standard	Shaft, heavy-duty	Shaft, stuffing box
Pump version A1, A2, I1, I2, Y	Pump version G1, G2, H1, H2, J1, J2, K1, K2, W, Z	
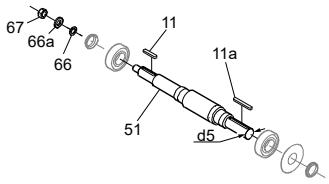	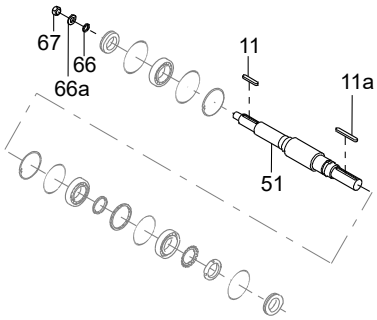	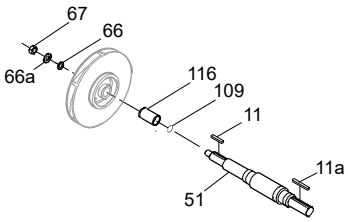
11:1 x key 11a:1 x key 51:1 x shaft 66:1 x washer 66a:1 x lock washer 67:1 x nut	11:1 x key 11a:1 x key 51:1 x shaft 66:1 x washer 66a:1 x lock washer 67:1 x nut	11:1 x key 11a:1 x key 51:1 x shaft 66:1 x washer 66a:1 x lock washer 67:1 x nut 109:1 x O-ring 116:1 x shaft sleeve

The material codes for the shaft can be found in the type designation on the nameplate.

NKG 125-100/-160/160-142 (J1) F 3 (P) M E (P) 2926
(1) (3) (2)

(1) Pump version J1: pump without motor, with grease-lubricated heavy-duty standard bearing, standard coupling.

(2) Shaft seal arrangement P: tandem, double seal.

(3) Material code P: carbon-graphite filled PTFE (Graflon®).

			Shaft for mechanical shaft seal						
(1) Pump version			A1, A2, I1, I2, Y				G1,G2,H1,H2,J1,J2,K1,K2,W,Z		
(2) Shaft seal arrangement			S		O, P, C, D		S, O, P, C, D		
Pump type		Pump shaft diameter d5	(3) Material code	A, B, C, D, E, F, G, H, K, M, N, P, S	I, J, L, R, T, U, W	A, B, C, D, E, F, G, H, K, M, N, P, S	I, J, L, R, T, U, W	A, B, E, F	C, D, G, H, K, M, N, P, S	I, J, L, R, T, U, W
50-32-	125.1	24		96861517	96861518	96861517	96861518	98819588	97904696	97904697
	160.1	24		96861517	96861518	97904698	97904699	98819588	97904696	97904697
	200.1	24		96861517	96861518	97904698	97904699	98819588	97904696	97904697
	125	24		96861517	96861518	97904698	97904699	98819588	97904696	97904697
	160	24		96861517	96861518	97904698	97904699	98819588	97904696	97904697
	200	24		96861517	96861518	97904698	97904699	98819588	97904696	97904697
	250	32		99437338	99437339	99437338	99437339	98819680	97926898	97929231
65-50-	125	24		96861517	96861518	97904698	97904699	98819588	97904696	97904697
	160	24		96861517	96861518	97904698	97904699	98819588	97904696	97904697
65-40-	200	24		96861517	96861518	97904698	97904699	98819588	97904696	97904697
	250	32		96861520	96861521	97929232	97929233	98819680	97926898	97929231
	315	32		96861520	96861521	97929232	97929233	98819680	97926898	97929231
80-65-	125	24		96861517	96861518	97904698	97904699	98819588	97904696	97904697
	160	24		96861517	96861518	97904698	97904699	98819588	97904696	97904697
80-50-	200	24		96861517	96861518	97904698	97904699	98819588	97904696	97904697
	250	32		96861520	96861521	97929232	97929233	98819680	97926898	97929231
	315	32		96861520	96861521	97929232	97929233	98819680	97926898	97929231

				Shaft for mechanical shaft seal						
(1) Pump version				A1, A2, I1, I2, Y				G1,G2,H1,H2,J1,J2,K1,K2,W,Z		
(2) Shaft seal arrangement				S		O, P, C, D		S, O, P, C, D		
Pump type		Pump shaft diameter d5	(3) Material code	A, B, C, D, E, F, G, H, K, M, N, P, S	I, J, L, R, T, U, W	A, B, C, D, E, F, G, H, K, M, N, P, S	I, J, L, R, T, U, W	A, B, E, F	C, D, G, H, K, M, N, P, S	I, J, L, R, T, U, W
100-80-	125	24		96861517	96861518	97904698	97904699	98819588	97904696	97904697
	160	32		96861520	96861521	97929232	97929233	98819680	97926898	97929231
100-65-	200	32		96861520	96861521	97929232	97929233	98819680	97926898	97929231
	250	32		96861520	96861521	97929232	97929233	98819680	97926898	97929231
	315	42		96861524	96861525	96861524	96861525	98819877	96887358	96887359
125-80-	160	32		96861520	96861521	97929232	97929233	98819680	97926898	97929231
	200	32		96861520	96861521	97929232	97929233	98819680	97926898	97929231
	250	32		96861520	96861521	97929232	97929233	98819680	97926898	97929231
	315	42		96861524	96861525	97739721	97739722	98819877	96887358	96887359
	400.1	42		96861524	96861525	97739721	97739722	98819877	96887358	96887359
	400	42		96861524	96861525	97739721	97739722	98819877	96887358	96887359
	400 [1]	48		96861526	96861527	97761156	97761157	98819883	97761116	97761152
125-100-	160	32		96861520	96861521	97929232	97929233	98819680	97926898	97929231
	200	32		96861520	96861521	97929232	97929233	98819680	97926898	97929231
	250	42		96861524	96861525	97739721	97739722	98819877	96887358	96887359
	315	42		96861524	96861525	97739721	97739722	98819877	96887358	96887359
	400	42		96861524	96861525	97739721	97739722	98819877	96887358	96887359
150-125-	200	32		96861520	96861521	97929232	97929233	98819680	97926898	97929231
	250	42		96861524	96861525	97739721	97739722	98819877	96887358	96887359
	315	42		96861524	96861525	97739721	97739722	98819877	96887358	96887359
	400	42		96861524	96861525	97739721	97739722	98819877	96887358	96887359
	500	60		96861528	96861529	97761158	97761159	98819888	97761154	97761155
200-150-	200	32		96861520	96861521	97929232	97929233	98819680	97926898	97929231
	250	42		96861524	96861525	97739721	97739722	98819877	96887358	96887359
	315.1	48		96861526	96861527	96861526	96861527	98819883	97761116	97761152
	315.2	48		96861526	96861527	97761156	97761157	98819883	97761116	97761152
	315	48		96861526	96861527	97761156	97761157	98819883	97761116	97761152
	400	48		96861526	96861527	97761156	97761157	98819883	97761116	97761152
	500	60		96861528	96861529	96861528	96861529	98819888	97761154	97761155
250-200-	400	48		96861526	96861527	-	-	98819883	97761116	97761152
	450	48		96861526	96861527	-	-	98819883	97761116	97761152
300-250-	350	48		96861526	96861527	-	-	98819883	97761116	97761152
	400	48		96861526	96861527	-	-	98819883	97761116	97761152
	450	60		96861528	96861529	-	-	98819888	97761154	97761155
	500	60		96861528	96861529	-	-	98819888	97761154	97761155

1) For 2-pole model only.

				Shaft for stuffing box					
(1) Pump version				A1, A2, I1, I2, Y1					
(2) Shaft seal arrangement				B					
Pump type		Pump shaft diameter d5	(3) Material code	A, B, E, F		C, D, G, H, K, M, N, P, S		I, J, L, R, T, U, W	
			Rubber code	V	E	V	E	V	E
50-32-	125.1	24		98812953	96958259	98812954	98812962	98795674	98795698
	160.1	24		98812953	96958259	98812954	98812962	98795674	98795698
	200.1	24		98812953	96958259	98812954	98812962	98795674	98795698
	125	24		98812953	96958259	98812954	98812962	98795674	98795698
	160	24		98812953	96958259	98812954	98812962	98795674	98795698
	200	24		98812953	96958259	98812954	98812962	98795674	98795698
	250	32		99437347	99437341	99437348	99437349	99437344	99437345
65-50-	125	24		98812953	96958259	98812954	98812962	98795674	98795698
	160	24		98812953	96958259	98812954	98812962	98795674	98795698
65-40-	200	24		98812953	96958259	98812954	98812962	98795674	98795698
	250	32		98812957	96958261	98812958	98812960	98795675	98795699
	315	32		98812957	96958261	98812958	98812960	98795675	98795699
80-65-	125	24		98812953	96958259	98812954	98812962	98795674	98795698
	160	24		98812953	96958259	98812954	98812962	98795674	98795698
80-50-	200	24		98812953	96958259	98812954	98812962	98795674	98795698
	250	32		98812957	96958261	98812958	98812960	98795675	98795699
	315	32		98812957	96958261	98812958	98812960	98795675	98795699
100-80-	125	24		98812953	96958259	98812954	98812962	98795674	98795698
	160	32		98812957	96958261	98812958	98812960	98795675	98795699
100-65-	200	32		98812957	96958261	98812958	98812960	98795675	98795699
	250	32		98812957	96958261	98812958	98812960	98795675	98795699
	315	42		98795679	98795703	98795680	98795704	98795681	98795705
125-80-	160	32		98812957	96958261	98812958	98812960	98795675	98795699
	200	32		98812957	96958261	98812958	98812960	98795675	98795699
	250	32		98812957	96958261	98812958	98812960	98795675	98795699
	315	42		98795679	98795703	98795680	98795704	98795681	98795705
	400.1	42		98795679	98795703	98795680	98795704	98795681	98795705
	400	42		98795679	98795703	98795680	98795704	98795681	98795705
	400 [2)]	48		98795682	98795706	98795683	98795707	98795684	98795708
125-100-	160	32		98812957	96958261	98812958	98812960	98795675	98795699
	200	32		98812957	96958261	98812958	98812960	98795675	98795699
	250	42		98795679	98795703	98795680	98795704	98795681	98795705
	315	42		98795679	98795703	98795680	98795704	98795681	98795705
	400	42		98795679	98795703	98795680	98795704	98795681	98795705
150-125-	200	32		98812957	96958261	98812958	98812960	98795675	98795699
	250	42		98795679	98795703	98795680	98795704	98795681	98795705
	315	42		98795679	98795703	98795680	98795704	98795681	98795705
	400	42		98795679	98795703	98795680	98795704	98795681	98795705
	500	60		98795685	98795709	98795686	98795710	98795687	98795711
200-150-	200	32		98812957	96958261	98812958	98812960	98795675	98795699
	250	42		98795679	98795703	98795680	98795704	98795681	98795705
	315.1	48		98795682	98795706	98795683	98795707	98795684	98795708
	315.2	48		98795682	98795706	98795683	98795707	98795684	98795708
	315	48		98795682	98795706	98795683	98795707	98795684	98795708
	400	48		98795682	98795706	98795683	98795707	98795684	98795708
	500	60		98795685	98795709	98795686	98795710	98795687	98795711
250-200-	400	48		98795682	98795706	98795683	98795707	98795684	98795708
	450	48		98795682	98795706	98795683	98795707	98795684	98795708

				Shaft for stuffing box					
(1) Pump version				A1, A2, I1, I2, Y1					
(2) Shaft seal arrangement				B					
Pump type		Pump shaft diameter d5	(3) Material code	A, B, E, F		C, D, G, H, K, M, N, P, S		I, J, L, R, T, U, W	
			Rubber code	V	E	V	E	V	E
300-250-	350	48		98795682	98795706	98795683	98795707	98795684	98795708
	400	48		98795682	98795706	98795683	98795707	98795684	98795708
	450	60		98795685	98795709	98795686	98795710	98795687	98795711
	500	60		98795685	98795709	98795686	98795710	98795687	98795711

2) For 2-pole model only.

				Shaft for stuffing box					
(1) Pump version				G1, G2, H1, H2, J1, J2, K1, K2, W1, Z1					
(2) Shaft seal arrangement				B					
Pump type		Pump shaft diameter d5	(3) Material code	A, B, E, F		C, D, G, H, K, M, N, P, S		I, J, L, R, T, U, W	
			Rubber code	V	E	V	E	V	E
50-32-	125.1	24		98922056	98922030	98795688	98795712	98795689	98795713
	160.1	24		98922056	98922030	98795688	98795712	98795689	98795713
	200.1	24		98922056	98922030	98795688	98795712	98795689	98795713
	125	24		98922056	98922030	98795688	98795712	98795689	98795713
	160	24		98922056	98922030	98795688	98795712	98795689	98795713
	200	24		98922056	98922030	98795688	98795712	98795689	98795713
	250	32		98922057	98922051	98795690	98795714	98795691	98795715
65-50-	125	24		98922056	98922030	98795688	98795712	98795689	98795713
	160	24		98922056	98922030	98795688	98795712	98795689	98795713
65-40-	200	24		98922056	98922030	98795688	98795712	98795689	98795713
	250	32		98922057	98922051	98795690	98795714	98795691	98795715
	315	32		98922057	98922051	98795690	98795714	98795691	98795715
80-65-	125	24		98922056	98922030	98795688	98795712	98795689	98795713
	160	24		98922056	98922030	98795688	98795712	98795689	98795713
80-50-	200	24		98922056	98922030	98795688	98795712	98795689	98795713
	250	32		98922057	98922051	98795690	98795714	98795691	98795715
	315	32		98922057	98922051	98795690	98795714	98795691	98795715
100-80-	125	24		98922056	98922030	98795688	98795712	98795689	98795713
	160	32		98922057	98922051	98795690	98795714	98795691	98795715
100-65-	200	32		98922057	98922051	98795690	98795714	98795691	98795715
	250	32		98922057	98922051	98795690	98795714	98795691	98795715
	315	42		98922058	98922052	98795692	98795716	98795693	98795717
125-80-	160	32		98922057	98922051	98795690	98795714	98795691	98795715
	200	32		98922057	98922051	98795690	98795714	98795691	98795715
	250	32		98922057	98922051	98795690	98795714	98795691	98795715
	315	42		98922058	98922052	98795692	98795716	98795693	98795717
	400.1	42		98922058	98922052	98795692	98795716	98795693	98795717
	400	42		98922058	98922052	98795692	98795716	98795693	98795717
	400 3)	48		98922059	98922054	98795694	98795718	98795695	98795719
125-100-	160	32		98922057	98922051	98795690	98795714	98795691	98795715
	200	32		98922057	98922051	98795690	98795714	98795691	98795715
	250	42		98922058	98922052	98795692	98795716	98795693	98795717
	315	42		98922058	98922052	98795692	98795716	98795693	98795717
	400	42		98922058	98922052	98795692	98795716	98795693	98795717

				Shaft for stuffing box					
(1) Pump version				G1, G2, H1, H2, J1, J2, K1, K2, W1, Z1					
(2) Shaft seal arrangement				B					
Pump type		Pump shaft diameter d5	(3) Material code	A, B, E, F		C, D, G, H, K, M, N, P, S		I, J, L, R, T, U, W	
			Rubber code	V	E	V	E	V	E
150-125-	200	32		98922057	98922051	98795690	98795714	98795691	98795715
	250	42		98922058	98922052	98795692	98795716	98795693	98795717
	315	42		98922058	98922052	98795692	98795716	98795693	98795717
	400	42		98922058	98922052	98795692	98795716	98795693	98795717
	500	60		98922060	98922055	98795696	98795720	98795697	98795721
200-150-	200	32		98922057	98922051	98795690	98795714	98795691	98795715
	250	42		98922058	98922052	98795692	98795716	98795693	98795717
	315.1	48		98922059	98922054	98795694	98795718	98795695	98795719
	315.2	48		98922059	98922054	98795694	98795718	98795695	98795719
	315	48		98922059	98922054	98795694	98795718	98795695	98795719
	400	48		98922059	98922054	98795694	98795718	98795695	98795719
	500	60		98922060	98922055	98795696	98795720	98795697	98795721
250-200-	400	48		98922059	98922054	98795694	98795718	98795695	98795719
	450	48		98922059	98922054	98795694	98795718	98795695	98795719
300-250-	350	48		98922059	98922054	98795694	98795718	98795695	98795719
	400	48		98922059	98922054	98795694	98795718	98795695	98795719
	450	60		98922060	98922055	98795696	98795720	98795697	98795721
	500	60		98922060	98922055	98795696	98795720	98795697	98795721

3) For 2-pole model only.

Bearings, spacer ring, V-ring and oil seal

Bearing		
Pump version A1, A2, I1, I2, Y	Pump version H1, H2, K1, K2, Z	Pump version G1, G2, J1, J2, W
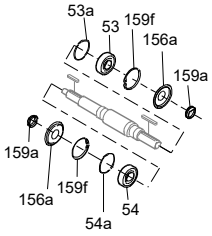	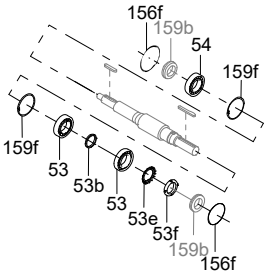	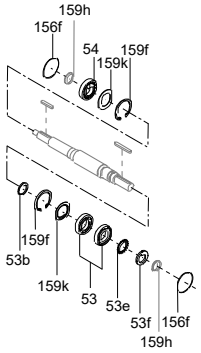
53/54:2 x bearing 53a/54a:2 x O-ring 156a:2 x bearing cover 159a:2 x V-ring 159f:2 x retaining ring	53:2 x bearing 54:1 x bearing 53b:1 x inner spacer rings 53c:1 x outer spacer rings 156f:2 x O-ring for cover 159f:2 x retaining ring 53e:1 x lock washer 53f:1 x lock nut	53:2 x bearing 54:1 x bearing 53b:1 x inner spacer rings 156f:2 x O-ring for cover 159f:2 x retaining ring 159k:2 x seal spacer 53e:1 x lock washer 53f:1 x lock nut

V-ring	
Pump version A1, A2, I1, I2, Y	Pump version G1, G2, J1, J2, W
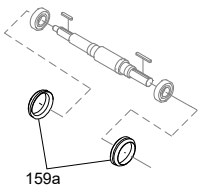	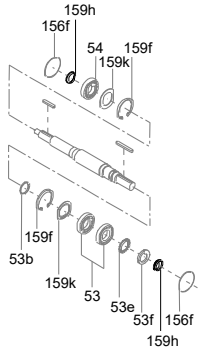
159a:2 x V-ring	159h: 2 x V-ring

Oil seal	O-ring
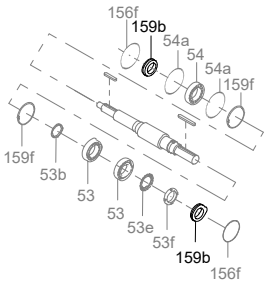	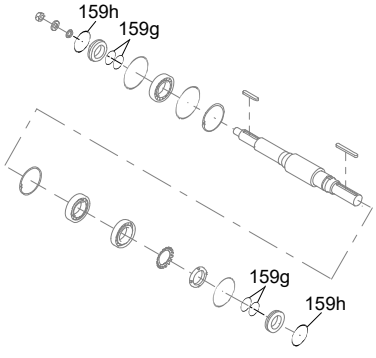
159b:1 x oil seal	159g:2 x O-ring 159h:1 x O-ring

The material code can be found in the type designation on the nameplate.

NKG 125-100-160 /160-142 H2 (F3) NKE O 2926

Pump type		Pump shaft diameter d5	Bearings				V-ring			Oil seal	O-ring
			Standard	PWIS-free	Heavy-duty		Standard	PWIS-free	Heavy-duty		
			Pump version				Pump version				
			A1, A2, I1, I2, Y		H1, H2, K1, K2, Z	G1, G2, J1, J2, W	A1, A2, I1, I2, Y		G1, G2, J1, J2, W		
50-32-	125.1	24	96579599	98670821	97904646	98819587	96591314	98670822	98670823	97904700	97853765
	160.1	24	96579599	98670821	97904646	98819587	96591314	98670822	98670823	97904700	97853765
	200.1	24	96579599	98670821	97904646	98819587	96591314	98670822	98670823	97904700	97853765
	125	24	96579599	98670821	97904646	98819587	96591314	98670822	98670823	97904700	97853765
	160	24	96579599	98670821	97904646	98819587	96591314	98670822	98670823	97904700	97853765
	200	24	96579599	98670821	97904646	98819587	96591314	98670822	98670823	97904700	97853765
	250	32	96579599	98670821	97929249	98819679	96591314	98670822	98670822	97929234	97929235
65-50-	125	24	96579599	98670821	97904646	98819587	96591314	98670822	98670823	97904700	97853765
	160	24	96579599	98670821	97904646	98819587	96591314	98670822	98670823	97904700	97853765
65-40-	200	24	96579599	98670821	97904646	98819587	96591314	98670822	98670823	97904700	97853765
	250	32	95919873	98670814	97929249	98819679	96871238	98670824	98670822	97929234	97929235
	315	32	95919873	98670814	97929249	98819679	96871238	98670824	98670822	97929234	97929235
80-65-	125	24	96579599	98670821	97904646	98819587	96591314	98670822	98670823	97904700	97853765
	160	24	96579599	98670821	97904646	98819587	96591314	98670822	98670823	97904700	97853765
80-50-	200	24	96579599	98670821	97904646	98819587	96591314	98670822	98670823	97904700	97853765
	250	32	95919873	98670814	97929249	98819679	96871238	98670824	98670822	97929234	97929235
	315	32	95919873	98670814	97929249	98819679	96871238	98670824	98670822	97929234	97929235
100-80-	125	24	96579599	98670821	97904646	98819587	96591314	98670822	98670823	97904700	97853765
	160	32	95919873	98670814	97929249	98819679	96871238	98670824	98670822	97929234	97929235
100-65-	200	32	95919873	98670814	97929249	98819679	96871238	98670824	98670822	97929234	97929235
	250	32	95919873	98670814	97929249	98819679	96871238	98670824	98670822	97929234	97929235
	315	42	95919875	98670816	96887353	98819876	96871240	98670826	98670825	96887776	97527677
125-80-	160	32	95919873	98670814	97929249	98819679	96871238	98670824	98670822	97929234	97929235
	200	32	95919873	98670814	97929249	98819679	96871238	98670824	98670822	97929234	97929235
	250	32	95919873	98670814	97929249	98819679	96871238	98670824	98670822	97929234	97929235
	315	42	95919875	98670816	96887353	98819876	96871240	98670826	98670825	96887776	97527677
	400.1	42	95919875	98670816	96887353	98819876	96871240	98670826	98670825	96887776	97527677
	400	42	95919875	98670816	96887353	98819876	96871240	98670826	98670825	96887776	97527677
	400 [1)]	48	95919876	98670817	97761201	98819882	96871241	98670827	98670827	97761180	97763478
125-100-	160	32	95919873	98670814	97929249	98819679	96871238	98670824	98670822	97929234	97929235
	200	32	95919873	98670814	97929249	98819679	96871238	98670824	98670822	97929234	97929235
	250	42	95919875	98670816	96887353	98819876	96871240	98670826	98670825	96887776	97527677
	315	42	95919875	98670816	96887353	98819876	96871240	98670826	98670825	96887776	97527677
	400	42	95919875	98670816	96887353	98819876	96871240	98670826	98670825	96887776	97527677
150-125-	200	32	95919873	98670814	97929249	98819679	96871238	98670824	98670822	97929234	97929235
	250	42	95919875	98670816	96887353	98819876	96871240	98670826	98670825	96887776	97527677
	315	42	95919875	98670816	96887353	98819876	96871240	98670826	98670825	96887776	97527677
	400	42	95919875	98670816	96887353	98819876	96871240	98670826	98670825	96887776	97527677
	500	60	95919878	98670819	97761201	98819882	96871242	98670828	98670827	97761180	97763478
200-150-	200	32	95919873	98670814	97929249	98819679	96871238	98670824	98670822	97929234	97929235
	250	42	95919875	98670816	96887353	98819876	96871240	98670826	98670825	96887776	97527677
	315.1	48	95919876	98670817	97761201	98819882	96871241	98670827	98670827	97761180	97763478
	315.2	48	95919876	98670817	97761201	98819882	96871241	98670827	98670827	97761180	97763478
	315	48	95919876	98670817	97761201	98819882	96871241	98670827	98670827	97761180	97763478
	400	48	95919876	98670817	97761201	98819882	96871241	98670827	98670827	97761180	97763478
	500	60	95919878	98670819	97761201	98819882	96871242	98670828	98670827	97761180	97763478

Pump type		Pump shaft diameter d5	Bearings				V-ring			Oil seal	O-ring
			Standard	PWIS-free	Heavy-duty		Standard	PWIS-free	Heavy-duty		
			Pump version				Pump version				
			A1, A2, I1, I2, Y		H1, H2, K1, K2, Z	G1, G2, J1, J2, W	A1, A2, I1, I2, Y		G1, G2, J1, J2, W		
250-200-	400	48	*95919876*	*98670817*	*97761201*	*98819882*	*96871241*	*98670827*	*98670827*	*97761180*	*97763478*
	450	48	*95919876*	*98670817*	*97761201*	*98819882*	*96871241*	*98670827*	*98670827*	*97761180*	*97763478*
300-250-	350	48	*95919876*	*98670817*	*97761201*	*98819882*	*96871241*	*98670827*	*98670827*	*97761180*	*97763478*
	400	48	*95919876*	*98670817*	*97761201*	*98819882*	*96871241*	*98670827*	*98670827*	*97761180*	*97763478*
	450	60	*95919878*	*98670819*	*97761201*	*98819882*	*96871242*	*98670828*	*98670827*	*97761180*	*97763478*
	500	60	*95919878*	*98670819*	*97761201*	*98819882*	*96871242*	*98670828*	*98670827*	*97761180*	*97763478*

1) For 2-pole model only.

Wear ring

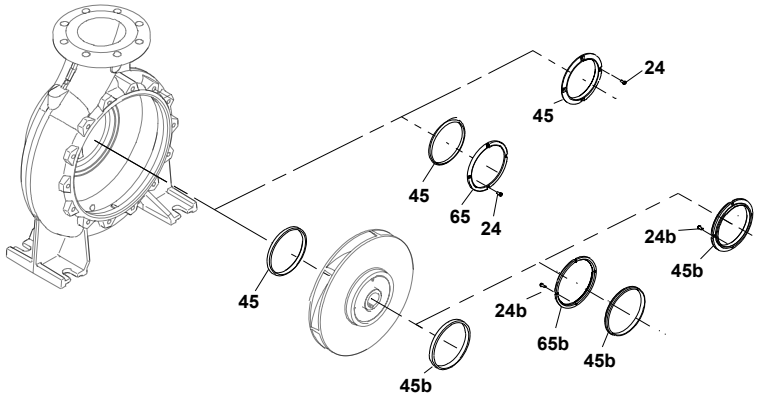

TM044731

Material code: A, B, C, D, E, F, G, H, S, T		Material code: I, N, P, R, W		Material code: I, K, L, M, U	
Pos. 45	**Pos. 45b**	**Pos. 45**	**Pos. 45b**	**Pos. 45**	**Pos. 45b**
45: 1 x wear ring	45b: 1 x wear ring	45: 1 x wear ring 65: 1 x wear ring retainer 24: 4 x screw	45b: 1 x wear ring 65b: 1 x wear ring retainer 24b: 4 x screw	45: 1 x wear ring 24: 4 x screw	45b: 1 x wear ring 24b: 4 x screw

Material code A, B, C, D, E, F, G, H, S, T (pump housing material cast iron)

The material code can be found in the type designation on the nameplate.

NKG 125-100-160 /160-142 H2 F 2 (A) KE O 2926

Pump type		Wear ring inner diameter [mm]		Wear ring material			
				Bronze/Brass		GG	
				A, B, C, D, E, F, G, H, S, T		A, B, C, D, E, F, G, H, S, T	
		Pos. 45	Pos. 45b	Pos. 45	Pos. 45b	Pos. 45	Pos. 45b
50-32-	125.1			*96810099*	-	-	-
	160.1			*96810098*	-	-	-
	200.1			*96810099*	-	-	-
	125			*96810099*	-	-	-
	160			*96810099*	*96810102*	-	-
	200			*96810099*	*96810102*	-	-
	250			*96810099*	*96810103*	-	-
65-50-	125			*96810100*	*96810102*	-	-
	160			*96810100*	*96810102*	-	-
65-40-	200			*96810100*	*96810102*	-	-
	250			*96810100*	*96810103*	-	-
	315			*96810102*	*96797628*	-	-
80-65-	125			*96810102*	*96810102*	-	-
	160			*96810102*	*96810102*	-	-
80-50-	200			*96810102*	*96810102*	-	-
	250			*96810102*	*96810103*	-	-
	315			*96810103*	*96797628*	-	-
100-80-	125			*96810103*	*96810102*	-	-
	160			*96810103*	*96810104*	-	-
100-65-	200			*96810103*	*96810104*	-	-
	250			*96810105*	*96797628*	-	-
	315			*96810105*	*96797628*	-	-

Pump type		Wear ring inner diameter [mm]		Wear ring material			
				Bronze/Brass		GG	
				A, B, C, D, E, F, G, H, S, T		A, B, C, D, E, F, G, H, S, T	
		Pos. 45	Pos. 45b	Pos. 45	Pos. 45b	Pos. 45	Pos. 45b
125-80-	160			96810106	96810104	-	-
	200			96797626	96797628	-	-
	250			96797626	96797628	-	-
	315			96797626	96797628	-	-
	400			96797628	96810109	-	-
125-100-	160			96810107	96810104	-	-
	200	174	154	96810108	96797628	-	-
	200	154	154	96797628	96797628	-	-
	250			96797628	96797628	-	-
	315			96797628	96797628	-	-
	400			96810109	96810109	-	-
150-125-	200			96810108	96797628	-	-
	250			96810109	96810109	-	-
	315			96810109	96797628	-	-
	400			96810109	96810109	-	-
	500			96810109	96810112	-	-
200-150-	200			96810110	96810109	-	-
	250	210	185	96810111	96810109	-	-
	250	185	185	96810109	96810109	-	-
	315.1			96810111	96810112	-	-
	315.2			96810111	96810112	-	-
	315			96810111	96810112	-	-
	400			96810112	96810112	-	-
	500			96810112	96810112	-	-
250-200-	400			96939611	96939611	96939606	96939609
	450			96939612	96939612	96939607	96939607
300-250-	350			96939613	96939615	96939608	96939607
	400			96939615	96939615	96939607	96939607
	450			96939614	96939614	96939607	96939607
	500			96939615	96939615	96939610	96939610

Material code I, J, K, L, M, N, P, R, W, U (pump housing material 1.4517 and 1.4408)

Pump type		Wear ring inner diameter [mm]		Material code	J, N, P, R, W				I, K, L, M, U			
				ACS approval	-		-		-		Yes	
				Wear ring material	Carbon-graphite-filled PTFE		Carbon-graphite-filled PTFE		1.4517		1.4517	
				Screw	1.4539		1.4401		1.4539		1.4401	
		Pos. 45	Pos. 45b		Pos. 45	Pos. 45b	Pos. 45	Pos. 45b	Pos. 45	Pos. 45b	Pos. 45	Pos. 45b
50-32-	125.1				96810113	96774200	96810114	96810117	96810134	96810138	96810135	96810139
	160.1				97939262	96774200	97939263	96810117	97939264	96810138	97939265	96810139
	200.1				97939262	96774200	97939263	96810117	97939264	96810138	97939265	96810139
	125				96810113	96774200	96810114	96810117	96810134	96810138	96810135	96810139
	160				96810113	96774200	96810114	96810117	96810134	96810138	96810135	96810139
	200				96810113	96774200	96810114	96810117	96810134	96810138	96810135	96810139
	250				96810113	96810120	96810114	96810121	96810134	96810142	96810135	96810143
65-50-	125				96774200	96774200	96810117	96810117	96810138	96810138	96810139	96810139
	160				96810115	96774200	96810116	96810117	96810136	96810138	96810137	96810139

Pump type		Wear ring inner diameter [mm]		Material code	J, N, P, R, W				I, K, L, M, U			
				ACS approval	-		-		-		Yes	
				Wear ring material	Carbon-graphite-filled PTFE		Carbon-graphite-filled PTFE		1.4517		1.4517	
				Screw	1.4539		1.4401		1.4539		1.4401	
		Pos. 45	Pos. 45b		Pos. 45	Pos. 45b	Pos. 45	Pos. 45b	Pos. 45	Pos. 45b	Pos. 45	Pos. 45b
65-40-	200				96810115	96774200	96810116	96810117	96810136	96810138	96810137	96810139
	250				96810115	96810120	96810116	96810121	96810136	96810142	96810137	96810143
	315				96774200	96810130	96810117	96810131	96810138	96810152	96810139	96810153
80-65-	125				96810120	96774200	96810121	96810117	96810142	96810138	96810143	96810139
	160				96774200	96774200	96810117	96810117	96810138	96810138	96810139	96810139
80-50-	200				96774200	96774200	96810117	96810117	96810138	96810138	96810139	96810139
	250				96774200	96810120	96810117	96810121	96810138	96810142	96810139	96810143
	315				96810120	96810130	96810121	96810131	96810142	96810152	96810143	96810153
100-80-	125				96810120	96774200	96810121	96810117	96810142	96810138	96810143	96810139
	160				96810120	96810124	96810121	96810125	96810142	96810146	96810143	96810147
100-65-	200				96810113	96810120	96810114	96810121	96810134	96810142	96810135	96810143
	250				96810124	96810130	96810125	96810131	96810146	96810152	96810147	96810153
	315				96810124	96810130	96810125	96810131	96810146	96810152	96810147	96810153
125-80-	160				96810124	96810128	96810125	96810129	96810146	96810150	96810147	96810151
	200				96810113	96810130	96810114	96810121	96810134	96810142	96810135	96810143
	250				96810124	96810130	96810125	96810131	96810146	96810152	96810147	96810153
	315				96810128	96810130	96810129	96810131	96810150	96810152	96810151	96810153
	400.1				96810128	96810132	96810129	96810133	96810150	96810154	96810151	96810155
	400				96810128	96810132	96810129	96810133	96810150	96810154	96810151	96810155
125-100-	160				96810118	96810124	96810119	96810125	96810148	96810146	96810149	96810147
	200				96810130	96810130	96810131	96810131	96810152	96810152	96810153	96810153
	250				96810130	96810130	96810131	96810131	96810152	96810152	96810153	96810153
	315				96810130	96810130	96810131	96810131	96810152	96810152	96810153	96810153
	400				96810132	96810132	96810133	96810133	96810154	96810154	96810155	96810155
150-125-	200	174	154		97939252	96810130	97939253	96810131	97939254	96810152	97939255	96810153
	200	154	154		96810130	96810130	96810131	96810131	96810152	96810152	96810153	96810153
	250				96810132	96810132	96810133	96810133	96810154	96810154	96810155	96810155
	315				96810132	96810130	96810133	96810131	96810154	96810152	96810155	96810153
	400				96810132	96810132	96810133	96810133	96810154	96810154	96810155	96810155
	500				96810132	96810132	96810133	96810133	96810154	96810154	96810155	96810155
200-150-	200				97939256	96810132	97939257	96810133	97939258	96810154	97939259	96810155
	250	210	185		96887266	96810132	96887264	96810133	96887262	96810154	96887255	96810155
	250	185	185		96810132	96810132	96810133	96810133	96810154	96810154	96810155	96810155
	315.1				97739720	96887266	97739719	96887264	97739717	96887262	97739700	96887255
	315.2				97739720	96887266	97739719	96887264	97739717	96887262	97739700	96887255
	315				97739720	96887266	97739719	96887264	97739717	96887262	97739700	96887255
	400				97739720	97739720	97739719	97739719	97739717	97739717	97739700	97739700
	500				97739720	97739720	97739719	97739719	97739717	97739717	97739700	97739700
250-200-	400				-	-	-	-	-	-	-	-
	450				-	-	-	-	-	-	-	-
300-250-	350				-	-	-	-	-	-	-	-
	400				-	-	-	-	-	-	-	-
	450				-	-	-	-	-	-	-	-
	500				-	-	-	-	-	-	-	-

Impeller

Impeller

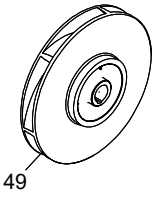

Find the impeller in Grundfos Product Center, and contact your local sales company.

Nut, washer and key for impeller

Nut, washer and key for impeller

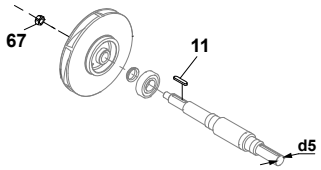

Material code A, B, C, D, E, F, G, H, K, M, N, P, S	Material code I, J, L, R, T, U, W
11:1 x key 67:1 x nut	11:1 x key 67:1 x nut

The material code can be found in the type designation on the nameplate.

NKG	125-100-160 /160-142	H2	F3	NKE	O	2926

Pump type		Pump shaft dia.	Material code	
		d5	A, B, C, D, E, F, G, H, K, M, N, P, S	I, J, L, R, T, U, W
50-32-	125.1	24	*96939128*	*96939129*
	160.1	24	*96939128*	*96939129*
	200.1	24	*96939128*	*96939129*
	125	24	*96939128*	*96939129*
	160	24	*96939128*	*96939129*
	200	24	*96939128*	*96939129*
	250	32	*96939130*	*96939131*
65-50-	125	24	*96939128*	*96939129*
	160	24	*96939128*	*96939129*
65-40-	200	24	*96939128*	*96939129*
	250	32	*96939130*	*96939131*
	315	32	*96939130*	*96939131*
80-65-	125	24	*96939128*	*96939129*
	160	24	*96939128*	*96939129*
80-50-	200	24	*96939128*	*96939129*
	250	32	*96939130*	*96939131*
	315	32	*96939130*	*96939131*
100-80-	125	24	*96939128*	*96939129*
	160	32	*96939130*	*96939131*
100-65-	200	32	*96939130*	*96939131*
	250	32	*96939130*	*96939131*
	315	42	*96939132*	*96939133*

Pump type		Pump shaft dia.	Material code	
		d5	A, B, C, D, E, F, G, H, K, M, N, P, S	I, J, L, R, T, U, W
125-80-	160	32	*96939130*	*96939131*
	200	32	*96939130*	*96939131*
	250	32	*96939130*	*96939131*
	315	42	*96939132*	*96939133*
	400.1	42	*96939132*	*96939133*
	400	42	*96939132*	*96939133*
	400 [1)]	48	*96939134*	*96939135*
125-100-	160	32	*96939130*	*96939131*
	200	32	*96939130*	*96939131*
	250	42	*96939132*	*96939133*
	315	42	*96939132*	*96939133*
	400	42	*96939132*	*96939133*
150-125-	200	32	*96939130*	*96939131*
	250	42	*96939132*	*96939133*
	315	42	*96939132*	*96939133*
	400	42	*96939132*	*96939133*
	500	60	*96939137*	*96939138*
200-150-	200	32	*96939130*	*96939131*
	250	42	*96939132*	*96939133*
	315.1	48	*96939134*	*96939135*
	315.2	48	*96939134*	*96939135*
	315	48	*96939134*	*96939135*
	400	48	*96939134*	*96939135*
	500	60	*96939137*	*96939138*
250-200-	400	48	*96939134*	*96939135*
	450	48	*96939134*	*96939135*
300-250-	350	48	*96939134*	*96939135*
	400	48	*96939134*	*96939135*
	450	60	*96939137*	*96939138*
	500	60	*96939137*	*96939138*

1) For 2-pole model only

Coupling

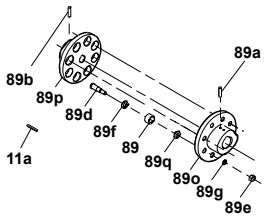

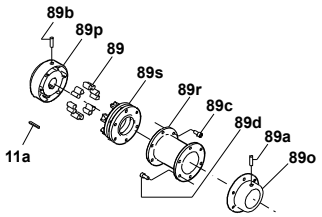

Grundfos standard coupling			Grundfos spacer coupling	
Coupling complete	Rubber	Bolts	Coupling complete	Rubber
89o:1 x male part 89p:1 x female part 89d:1 set of bolts/rubber parts 89a:1 x hexagon screw 89b:1 x hexagon screw 11a:1 x key	89: 1 set	89d:1 set of bolts 89f:1 set of washers 89q:1 set of washers 89g:1 set of lock washers 89e:1 set of nuts 89:1 set of rubber parts	89a:1 x set screw 89b:1 x set screw 89:1 set of rubber parts 89o:1 x coupling part, male 89s:1 x spacer ring 89p:1 x coupling part, female 89r:1 x spacer sleeve 89c:1 set of hexagon screws 89d:1 set of hexagon screws 11a:1 x key	89: 1 set

Pump type			Motor data					Shaft dia.		Grundfos standard coupling				Grundfos spacer coupling			
			Pole	Power [kW]		Frame size	Make	Pump	Motor	Coupling diameter	Coupling complete	Rubber	Bolts	Coupling diameter	Spacer length	Coupling complete	Rubber
				50 Hz	60 Hz			[mm]	[mm]	[mm]				[mm]	[mm]		
50	32	125	2	1.1	-	90S	All	24	24	125	96848894	96789247	96809939	95	100	96579720	96480016
50	32	125	2	1.5	1.5	90S	All	24	24	125	96848894	96789247	96809939	95	100	96579720	96480016
50	32	125	2	2.2	2.2	90L	All	24	24	125	96848894	96789247	96809939	95	100	96579720	96480016
50	32	125	2	3	3	100L	All	24	28	140	96848895	96789247	96809940	95	100	96579722	96480016
50	32	125	2	-	4	112M	All	24	28	140	96848895	96789247	96809940	95	100	96579722	96480016
50	32	125	2	-	5.5	132S	All	24	38	160	96848896	96789247	96809941	95	100	96579726	96480016
50	32	125	4	0.25	0.25	71A	All	24	14	125	96848892	96789247	96809939	95	100	96579717	96480016
50	32	125	4	0.37	0.37	71B	All	24	14	125	96848892	96789247	96809939	95	100	96579717	96480016
50	32	125	4	-	0.55	80A	All	24	19	125	96848893	96789247	96809939	95	100	96579719	96480016
50	32	125	4	-	0.75	80B	All	24	19	125	96848893	96789247	96809939	95	100	96579719	96480016
50	32	160	2	2.2	-	90L	All	24	24	125	96848894	96789247	96809939	95	100	96579720	96480016
50	32	160	2	3	3	100L	All	24	28	140	96848895	96789247	96809940	95	100	96579722	96480016
50	32	160	2	4	4	112M	All	24	28	140	96848895	96789247	96809940	95	100	96579722	96480016
50	32	160	2	5.5	5.5	132S	All	24	38	160	96848896	96789247	96809941	95	100	96579726	96480016
50	32	160	2	-	7.5	132S	All	24	38	160	96848896	96789247	96809941	95	100	96579726	96480016
50	32	160	2	-	11	160M	All	24	42	180	96848897	96789247	96809941	95	100	96579731	96480016
50	32	160	4	0.25	-	71A	All	24	14	125	96848892	96789247	96809939	95	100	96579717	96480016
50	32	160	4	0.37	0.37	71B	All	24	14	125	96848892	96789247	96809939	95	100	96579717	96480016
50	32	160	4	0.55	0.55	80A	All	24	19	125	96848893	96789247	96809939	95	100	96579719	96480016
50	32	160	4	0.75	0.75	80B	All	24	19	125	96848893	96789247	96809939	95	100	96579719	96480016
50	32	160	4	-	1.1	90S	All	24	24	125	96848894	96789247	96809939	95	100	96579720	96480016
50	32	200	2	4	-	112M	All	24	28	140	96848895	96789247	96809940	95	100	96579722	96480016
50	32	200	2	5.5	5.5	132S	All	24	38	160	96848896	96789247	96809941	95	100	96579726	96480016
50	32	200	2	7.5	7.5	132S	All	24	38	160	96848896	96789247	96809941	95	100	96579726	96480016
50	32	200	2	11	11	160M	All	24	42	180	96848897	96789247	96809941	95	100	96579731	96480016
50	32	200	2	-	15	160M	All	24	42	180	96848897	96789247	96809941	95	100	96579731	96480016
50	32	200	2	-	18.5	160L	All	24	42	180	96848897	96789247	96809941	95	100	96579731	96480016
50	32	200	4	0.55	-	80A	All	24	19	125	96848893	96789247	96809939	95	100	96579719	96480016
50	32	200	4	0.75	0.75	80B	All	24	19	125	96848893	96789247	96809939	95	100	96579719	96480016
50	32	200	4	1.1	1.1	90S	All	24	24	125	96848894	96789247	96809939	95	100	96579720	96480016

Pump type			Motor data					Shaft dia.		Grundfos standard coupling				Grundfos spacer coupling			
			Pole	Power [kW]		Frame size	Make	Pump	Motor	Coupling diameter	Coupling complete	Rubber	Bolts	Coupling diameter	Spacer length	Coupling complete	Rubber
				50 Hz	60 Hz			[mm]	[mm]	[mm]				[mm]	[mm]		
50	32	200	4	1.5	1.5	90L	All	24	24	125	96848894	96789247	96809939	95	100	96579720	96480016
50	32	200	4	-	2.2	100L	All	24	28	140	96848895	96789247	96809940	95	100	96579722	96480016
50	32	250	2	5.5	-	132S	All	32	38	160	96848905	96789247	96809941	95	100	96579789	96480016
50	32	250	2	7.5	-	132S	All	32	38	160	96848905	96789247	96809941	95	100	96579789	96480016
50	32	250	2	11	11	160M	All	32	42	180	96848906	96789247	96809941	95	100	96579801	96480016
50	32	250	2	15	15	160M	All	32	42	180	96848906	96789247	96809941	95	100	96579801	96480016
50	32	250	2	-	18.5	160L	All	32	42	180	96848906	96789247	96809941	95	100	96579801	96480016
50	32	250	2	-	22	180M	All	32	48	200	96848907	96789269	96809942	110	100	96861595	96480017
50	32	250	2	-	30	200L	All	32	55	200	96848908	96789269	96809942	125	100	96861597	96480018
50	32	250	4	0.75	-	80B	All	32	19	125	96848902	96789247	96809939	95	100	96579782	96480016
50	32	250	4	1.1	1.1	90S	All	32	24	125	96848903	96789247	96809939	95	100	96579784	96480016
50	32	250	4	1.5	1.5	90L	All	32	24	125	96848903	96789247	96809939	95	100	96579784	96480016
50	32	250	4	2.2	2.2	100L	All	32	28	140	96848904	96789247	96809940	95	100	96579786	96480016
50	32	250	4	-	3	100L	All	32	28	140	96848904	96789247	96809940	95	100	96579786	96480016
50	32	125.1	2	0.75	-	80A	All	24	19	125	96848893	96789247	96809939	95	100	96579719	96480016
50	32	125.1	2	1.1	1.1	90S	All	24	24	125	96848894	96789247	96809939	95	100	96579720	96480016
50	32	125.1	2	1.5	1.5	90S	All	24	24	125	96848894	96789247	96809939	95	100	96579720	96480016
50	32	125.1	2	2.2	2.2	90L	All	24	24	125	96848894	96789247	96809939	95	100	96579720	96480016
50	32	125.1	2	-	3	100L	All	24	28	140	96848895	96789247	96809940	95	100	96579722	96480016
50	32	125.1	2	-	4	112M	All	24	28	140	96848895	96789247	96809940	95	100	96579722	96480016
50	32	125.1	4	0.25	0.25	71A	All	24	14	125	96848892	96789247	96809939	95	100	96579717	96480016
50	32	125.1	4	0.37	0.37	71B	All	24	14	125	96848892	96789247	96809939	95	100	96579717	96480016
50	32	125.1	4	-	0.55	80A	All	24	19	125	96848893	96789247	96809939	95	100	96579719	96480016
50	32	160.1	2	1.5	-	90S	All	24	24	125	96848894	96789247	96809939	95	100	96579720	96480016
50	32	160.1	2	2.2	2.2	90L	All	24	24	125	96848894	96789247	96809939	95	100	96579720	96480016
50	32	160.1	2	3	3	100L	All	24	28	140	96848895	96789247	96809940	95	100	96579722	96480016
50	32	160.1	2	4	4	112M	All	24	28	140	96848895	96789247	96809940	95	100	96579722	96480016
50	32	160.1	2	-	5.5	132S	All	24	38	160	96848896	96789247	96809941	95	100	96579726	96480016
50	32	160.1	2	-	7.5	132S	All	24	38	160	96848896	96789247	96809941	95	100	96579726	96480016
50	32	160.1	4	0.25	-	71A	All	24	14	125	96848892	96789247	96809939	95	100	96579717	96480016
50	32	160.1	4	0.37	0.37	71B	All	24	14	125	96848892	96789247	96809939	95	100	96579717	96480016
50	32	160.1	4	0.55	0.55	80A	All	24	19	125	96848893	96789247	96809939	95	100	96579719	96480016
50	32	160.1	4	-	0.75	80B	All	24	19	125	96848893	96789247	96809939	95	100	96579719	96480016
50	32	200.1	2	3	-	100L	All	24	28	140	96848895	96789247	96809940	95	100	96579722	96480016
50	32	200.1	2	4	4	112M	All	24	28	140	96848895	96789247	96809940	95	100	96579722	96480016
50	32	200.1	2	5.5	5.5	132S	All	24	38	160	96848896	96789247	96809941	95	100	96579726	96480016
50	32	200.1	2	7.5	7.5	132S	All	24	38	160	96848896	96789247	96809941	95	100	96579726	96480016
50	32	200.1	2	-	11	160M	All	24	42	180	96848897	96789247	96809941	95	100	96579731	96480016
50	32	200.1	4	0.37	-	71B	All	24	14	125	96848892	96789247	96809939	95	100	96579717	96480016
50	32	200.1	4	0.55	0.55	80A	All	24	19	125	96848893	96789247	96809939	95	100	96579719	96480016
50	32	200.1	4	0.75	0.75	80B	All	24	19	125	96848893	96789247	96809939	95	100	96579719	96480016
50	32	200.1	4	-	1.1	90S	All	24	24	125	96848894	96789247	96809939	95	100	96579720	96480016
50	32	200.1	4	-	1.5	90L	All	24	24	125	96848894	96789247	96809939	95	100	96579720	96480016
65	40	200	2	5.5	-	132S	All	24	38	160	96848896	96789247	96809941	95	100	96579726	96480016
65	40	200	2	7.5	-	132S	All	24	38	160	96848896	96789247	96809941	95	100	96579726	96480016
65	40	200	2	11	11	160M	All	24	42	180	96848897	96789247	96809941	95	100	96579731	96480016
65	40	200	2	15	15	160M	All	24	42	180	96848897	96789247	96809941	95	100	96579731	96480016
65	40	200	2	-	18.5	160L	All	24	42	180	96848897	96789247	96809941	95	100	96579731	96480016
65	40	200	2	-	22	180M	All	24	48	200	96848898	96789269	96809942	110	100	96579733	96480017
65	40	200	2	-	30	200L	All	24	55	200	96848899	96789269	96809942	125	100	96579763	96480018
65	40	200	4	0.75	-	80B	All	24	19	125	96848893	96789247	96809939	95	100	96579719	96480016

Pump type			Motor data					Shaft dia.		Grundfos standard coupling				Grundfos spacer coupling			
			Pole	Power [kW]		Frame size	Make	Pump	Motor	Coupling diameter	Coupling complete	Rubber	Bolts	Coupling diameter	Spacer length	Coupling complete	Rubber
				50 Hz	60 Hz			[mm]	[mm]	[mm]				[mm]	[mm]		
65	40	200	4	1.1	1.1	90S	All	24	24	125	96848894	96789247	96809939	95	100	96579720	96480016
65	40	200	4	1.5	1.5	90L	All	24	24	125	96848894	96789247	96809939	95	100	96579720	96480016
65	40	200	4	2.2	2.2	100L	All	24	28	140	96848895	96789247	96809940	95	100	96579722	96480016
65	40	200	4	-	3	100L	All	24	28	140	96848895	96789247	96809940	95	100	96579722	96480016
65	40	250	2	11	-	160M	All	32	42	180	96848906	96789247	96809941	95	100	96579801	96480016
65	40	250	2	15	15	160M	All	32	42	180	96848906	96789247	96809941	95	100	96579801	96480016
65	40	250	2	18.5	18.5	160L	All	32	42	180	96848906	96789247	96809941	95	100	96579801	96480016
65	40	250	2	22	22	180M	All	32	48	200	96848907	96789269	96809942	110	100	96861595	96480017
65	40	250	2	30	30	200L	All	32	55	200	96848908	96789269	96809942	125	100	96861597	96480018
65	40	250	2	-	37	200L	All	32	55	200	96848908	96789269	96809942	125	100	96861597	96480018
65	40	250	2	-	45	225M	All	32	55	200	96848908	96789269	96809942	125	100	96861597	96480018
65	40	250	4	1.5	-	90L	All	32	24	125	96848903	96789247	96809939	95	100	96579784	96480016
65	40	250	4	2.2	2.2	100L	All	32	28	140	96848904	96789247	96809940	95	100	96579786	96480016
65	40	250	4	3	3	100L	All	32	28	140	96848904	96789247	96809940	95	100	96579786	96480016
65	40	250	4	-	4	112M	All	32	28	140	96848904	96789247	96809940	95	100	96579786	96480016
65	40	250	4	-	5.5	132S	All	32	38	160	96848905	96789247	96809941	95	100	96579789	96480016
65	40	315	2	22	-	180M	All	32	48	200	96848907	96789269	96809942	110	100	96861595	96480017
65	40	315	2	30	-	200L	All	32	55	200	96848908	96789269	96809942	125	100	96861597	96480018
65	40	315	2	37	37	200L	All	32	55	200	96848908	96789269	96809942	125	100	96861597	96480018
65	40	315	2	45	45	225M	All	32	55	200	96848908	96789269	96809942	125	100	96861597	96480018
65	40	315	2	0	55	250M	All	32	60	224	96848909	96789269	96809942	140	100	96861599	96480019
65	40	315	2	0	75	280S	All	32	65	224	96848910	96789269	96809942	160	100	96861601	96480040
65	40	315	2	0	90	280M	All	32	65	224	96848910	96789269	96809942	160	100	96861601	96480040
65	40	315	4	3	-	100L	All	32	28	140	96848904	96789247	96809940	95	100	96579786	96480016
65	40	315	4	4	-	112M	All	32	28	140	96848904	96789247	96809940	95	100	96579786	96480016
65	40	315	4	5.5	5.5	132S	All	32	38	160	96848905	96789247	96809941	95	100	96579789	96480016
65	40	315	4	7.5	7.5	132S	All	32	38	160	96848905	96789247	96809941	95	100	96579789	96480016
65	40	315	4	-	11	160M	All	32	42	180	96848906	96789247	96809941	95	100	96579801	96480016
65	50	125	2	1.5	-	90S	All	24	24	125	96848894	96789247	96809939	95	100	96579720	96480016
65	50	125	2	2.2	-	90L	All	24	24	125	96848894	96789247	96809939	95	100	96579720	96480016
65	50	125	2	3	3	100L	All	24	28	140	96848895	96789247	96809940	95	100	96579722	96480016
65	50	125	2	4	4	112M	All	24	28	140	96848895	96789247	96809940	95	100	96579722	96480016
65	50	125	2	5.5	5.5	132S	All	24	38	160	96848896	96789247	96809941	95	100	96579726	96480016
65	50	125	2	-	7.5	132S	All	24	38	160	96848896	96789247	96809941	95	100	96579726	96480016
65	50	125	2	-	11	160M	All	24	42	180	96848897	96789247	96809941	95	100	96579731	96480016
65	50	125	4	0.25	-	71A	All	24	14	125	96848892	96789247	96809939	95	100	96579717	96480016
65	50	125	4	0.37	0.37	71B	All	24	14	125	96848892	96789247	96809939	95	100	96579717	96480016
65	50	125	4	0.55	0.55	80A	All	24	19	125	96848893	96789247	96809939	95	100	96579719	96480016
65	50	125	4	-	0.75	80B	All	24	19	125	96848893	96789247	96809939	95	100	96579719	96480016
65	50	125	4	-	1.1	90S	All	24	24	125	96848894	96789247	96809939	95	100	96579720	96480016
65	50	160	2	4	-	112M	All	24	28	140	96848895	96789247	96809940	95	100	96579722	96480016
65	50	160	2	5.5	5.5	132S	All	24	38	160	96848896	96789247	96809941	95	100	96579726	96480016
65	50	160	2	7.5	7.5	132S	All	24	38	160	96848896	96789247	96809941	95	100	96579726	96480016
65	50	160	2	11	11	160M	All	24	42	180	96848897	96789247	96809941	95	100	96579731	96480016
65	50	160	2	-	15	160M	All	24	42	180	96848897	96789247	96809941	95	100	96579731	96480016
65	50	160	4	0.37	0	71B	All	24	14	125	96848892	96789247	96809939	95	100	96579717	96480016
65	50	160	4	0.55	0.55	80A	All	24	19	125	96848893	96789247	96809939	95	100	96579719	96480016
65	50	160	4	0.75	0.75	80B	All	24	19	125	96848893	96789247	96809939	95	100	96579719	96480016
65	50	160	4	1.1	1.1	90S	All	24	24	125	96848894	96789247	96809939	95	100	96579720	96480016
65	50	160	4	-	1.5	90L	All	24	24	125	96848894	96789247	96809939	95	100	96579720	96480016
65	50	160	4	-	2.2	100L	All	24	28	140	96848895	96789247	96809940	95	100	96579722	96480016

Pump type			Motor data					Shaft dia.		Grundfos standard coupling				Grundfos spacer coupling			
			Pole	Power [kW]		Frame size	Make	Pump	Motor	Coupling diameter	Coupling complete	Rubber	Bolts	Coupling diameter	Spacer length	Coupling complete	Rubber
				50 Hz	60 Hz			[mm]	[mm]	[mm]				[mm]	[mm]		
80	50	200	2	11	-	160M	All	24	42	180	96848897	96789247	96809941	95	100	96579731	96480016
80	50	200	2	15	15	160M	All	24	42	180	96848897	96789247	96809941	95	100	96579731	96480016
80	50	200	2	18.5	18.5	160L	All	24	42	180	96848897	96789247	96809941	95	100	96579731	96480016
80	50	200	2	22	22	180M	All	24	48	200	96848898	96789269	96809942	110	100	96579733	96480017
80	50	200	2	-	30	200L	All	24	55	200	96848899	96789269	96809942	125	100	96579763	96480018
80	50	200	2	-	37	200L	All	24	55	200	96848899	96789269	96809942	125	100	96579763	96480018
80	50	200	2	-	45	225M	All	24	55	200	96848899	96789269	96809942	125	100	96579763	96480018
80	50	200	4	1.1	-	90S	All	24	24	125	96848894	96789247	96809939	95	100	96579720	96480016
80	50	200	4	1.5	-	90L	All	24	24	125	96848894	96789247	96809939	95	100	96579720	96480016
80	50	200	4	2.2	2.2	100L	All	24	28	140	96848895	96789247	96809940	95	100	96579722	96480016
80	50	200	4	3	3	100L	All	24	28	140	96848895	96789247	96809940	95	100	96579722	96480016
80	50	200	4	-	4	112M	All	24	28	140	96848895	96789247	96809940	95	100	96579722	96480016
80	50	200	4	-	5.5	132S	All	24	38	160	96848896	96789247	96809941	95	100	96579726	96480016
80	50	250	2	15	-	160M	All	32	42	180	96848906	96789247	96809941	95	100	96579801	96480016
80	50	250	2	18.5	-	160L	All	32	42	180	96848906	96789247	96809941	95	100	96579801	96480016
80	50	250	2	22	-	180M	All	32	48	200	96848907	96789269	96809942	110	100	96861595	96480017
80	50	250	2	30	30	200L	All	32	55	200	96848908	96789269	96809942	125	100	96861597	96480018
80	50	250	2	37	37	200L	All	32	55	200	96848908	96789269	96809942	125	100	96861597	96480018
80	50	250	2	-	45	225M	All	32	55	200	96848908	96789269	96809942	125	100	96861597	96480018
80	50	250	2	-	55	250M	All	32	60	224	96848909	96789269	96809942	140	100	96861599	96480019
80	50	250	2	-	75	280S	All	32	65	224	96848910	96789269	96809942	160	100	96861601	96480040
80	50	250	4	2.2	-	100L	All	32	28	140	96848904	96789247	96809940	95	100	96579786	96480016
80	50	250	4	3	-	100L	All	32	28	140	96848904	96789247	96809940	95	100	96579786	96480016
80	50	250	4	4	4	112M	All	32	28	140	96848904	96789247	96809940	95	100	96579786	96480016
80	50	250	4	-	5.5	132S	All	32	38	160	96848905	96789247	96809941	95	100	96579789	96480016
80	50	250	4	-	7.5	132M	All	32	38	160	96848905	96789247	96809941	95	100	96579789	96480016
80	50	315	2	30	-	200L	All	32	55	200	96848908	96789269	96809942	125	100	96861597	96480018
80	50	315	2	37	-	200L	All	32	55	200	96848908	96789269	96809942	125	100	96861597	96480018
80	50	315	2	45	-	225M	All	32	55	200	96848908	96789269	96809942	125	100	96861597	96480018
80	50	315	2	55	55	250M	All	32	60	224	96848909	96789269	96809942	140	100	96861599	96480019
80	50	315	2	75	75	280S	All	32	65	224	96848910	96789269	96809942	160	100	96861601	96480040
80	50	315	2	0	90	280M	All	32	65	224	96848910	96789269	96809942	160	100	96861601	96480040
80	50	315	2	0	110	315S	All	32	65	224	96848910	96789269	96809942	160	100	96861601	96480040
80	50	315	4	4	-	112M	All	32	28	140	96848904	96789247	96809940	95	100	96579786	96480016
80	50	315	4	5.5	5.5	132S	All	32	38	160	96848905	96789247	96809941	95	100	96579789	96480016
80	50	315	4	7.5	7.5	132M	All	32	38	160	96848905	96789247	96809941	95	100	96579789	96480016
80	50	315	4	11	11	160M	All	32	42	180	96848906	96789247	96809941	95	100	96579801	96480016
80	50	315	4	-	15	160L	All	32	42	180	96848906	96789247	96809941	95	100	96579801	96480016
80	65	125	2	3	-	100L	All	24	28	140	96848895	96789247	96809940	95	100	96579722	96480016
80	65	125	2	4	4	112M	All	24	28	140	96848895	96789247	96809940	95	100	96579722	96480016
80	65	125	2	5.5	5.5	132S	All	24	38	160	96848896	96789247	96809941	95	100	96579726	96480016
80	65	125	2	7.5	7.5	132S	All	24	38	160	96848896	96789247	96809941	95	100	96579726	96480016
80	65	125	2	-	11	160M	All	24	42	180	96848897	96789247	96809941	95	100	96579731	96480016
80	65	125	2	-	15	160M	All	24	42	180	96848897	96789247	96809941	95	100	96579731	96480016
80	65	125	4	0.37	0	71B	All	24	14	125	96848892	96789247	96809939	95	100	96579717	96480016
80	65	125	4	0.55	0.55	80A	All	24	19	125	96848893	96789247	96809939	95	100	96579719	96480016
80	65	125	4	0.75	0.75	80B	All	24	19	125	96848893	96789247	96809939	95	100	96579719	96480016
80	65	125	4	1.1	1.1	90S	All	24	24	125	96848894	96789247	96809939	95	100	96579720	96480016
80	65	125	4	-	1.5	90L	All	24	24	125	96848894	96789247	96809939	95	100	96579720	96480016
80	65	160	2	5.5	-	132S	All	24	38	160	96848896	96789247	96809941	95	100	96579726	96480016
80	65	160	2	7.5	7.5	132S	All	24	38	160	96848896	96789247	96809941	95	100	96579726	96480016

Pump type			Motor data					Shaft dia.		Grundfos standard coupling				Grundfos spacer coupling			
			Pole	Power [kW]		Frame size	Make	Pump	Motor	Coupling diameter	Coupling complete	Rubber	Bolts	Coupling diameter	Spacer length	Coupling complete	Rubber
				50 Hz	60 Hz			[mm]	[mm]	[mm]				[mm]	[mm]		
80	65	160	2	11	11	160M	All	24	42	180	96848897	96789247	96809941	95	100	96579731	96480016
80	65	160	2	15	15	160M	All	24	42	180	96848897	96789247	96809941	95	100	96579731	96480016
80	65	160	2	-	18.5	160L	All	24	42	180	96848897	96789247	96809941	95	100	96579731	96480016
80	65	160	2	-	22	180M	All	24	48	200	96848898	96789269	96809942	110	100	96579733	96480017
80	65	160	4	0.55	-	80A	All	24	19	125	96848893	96789247	96809939	95	100	96579719	96480016
80	65	160	4	0.75	-	80B	All	24	19	125	96848893	96789247	96809939	95	100	96579719	96480016
80	65	160	4	1.1	1.1	90S	All	24	24	125	96848894	96789247	96809939	95	100	96579720	96480016
80	65	160	4	1.5	1.5	90L	All	24	24	125	96848894	96789247	96809939	95	100	96579720	96480016
80	65	160	4	2.2	2.2	100L	All	24	28	140	96848895	96789247	96809940	95	100	96579722	96480016
80	65	160	4	-	3	100L	All	24	28	140	96848895	96789247	96809940	95	100	96579722	96480016
100	65	200	2	11	-	160M	All	32	42	180	96848906	96789247	96809941	95	140	96579802	96480016
100	65	200	2	15	-	160M	All	32	42	180	96848906	96789247	96809941	95	140	96579802	96480016
100	65	200	2	18.5	18.5	160L	All	32	42	180	96848906	96789247	96809941	95	140	96579802	96480016
100	65	200	2	22	22	180M	All	32	48	200	96848907	96789269	96809942	110	140	96579803	96480017
100	65	200	2	30	30	200L	All	32	55	200	96848908	96789269	96809942	125	140	96579804	96480018
100	65	200	2	37	37	200L	All	32	55	200	96848908	96789269	96809942	125	140	96579804	96480018
100	65	200	2	-	45	225M	All	32	55	200	96848908	96789269	96809942	125	140	96579804	96480018
100	65	200	2	-	55	250M	All	32	60	224	96848909	96789269	96809942	140	140	96579805	96480019
100	65	200	4	1.5	-	90L	All	32	24	125	96848903	96789247	96809939	95	140	96579785	96480016
100	65	200	4	2.2	-	100L	All	32	28	140	96848904	96789247	96809940	95	140	96579788	96480016
100	65	200	4	3	3	100L	All	32	28	140	96848904	96789247	96809940	95	140	96579788	96480016
100	65	200	4	4	4	112M	All	32	28	140	96848904	96789247	96809940	95	140	96579788	96480016
100	65	200	4	-	5.5	132S	All	32	38	160	96848905	96789247	96809941	95	140	96579800	96480016
100	65	200	4	-	7.5	132M	All	32	38	160	96848905	96789247	96809941	95	140	96579800	96480016
100	65	250	2	30	-	200L	All	32	55	200	96848908	96789269	96809942	125	140	96579804	96480018
100	65	250	2	37	-	200L	All	32	55	200	96848908	96789269	96809942	125	140	96579804	96480018
100	65	250	2	45	45	225M	All	32	55	200	96848908	96789269	96809942	125	140	96579804	96480018
100	65	250	2	55	55	250M	All	32	60	224	96848909	96789269	96809942	140	140	96579805	96480019
100	65	250	2	75	75	280S	All	32	65	224	96848910	96789269	96809942	160	140	96579806	96480040
100	65	250	2	-	90	280M	All	32	65	224	96848910	96789269	96809942	160	140	96579806	96480040
100	65	250	2	-	110	315S	All	32	65	224	96848910	96789269	96809942	160	140	96579806	96480040
100	65	250	4	3	-	100L	All	32	28	140	96848904	96789247	96809940	95	140	96579788	96480016
100	65	250	4	4	-	112M	All	32	28	140	96848904	96789247	96809940	95	140	96579788	96480016
100	65	250	4	5.5	5.5	132S	All	32	38	160	96848905	96789247	96809941	95	140	96579800	96480016
100	65	250	4	7.5	7.5	132M	All	32	38	160	96848905	96789247	96809941	95	140	96579800	96480016
100	65	250	4	-	11	160M	All	32	42	180	96848906	96789247	96809941	95	140	96579802	96480016
100	65	250	4	-	15	160L	All	32	42	180	96848906	96789247	96809941	95	140	96579802	96480016
100	65	315	2	55	-	250M	All	42	60	224	96848918	96789269	96809942	140	140	96861615	96480019
100	65	315	2	75	-	280S	All	42	65	224	96848919	96789269	96809942	160	140	96861617	96480040
100	65	315	2	90	90	280M	All	42	65	224	96848919	96789269	96809942	160	140	96861617	96480040
100	65	315	2	110	110	315S	All	42	65	224	96848919	96789269	96809942	160	140	96861617	96480040
100	65	315	2	-	132	315M	All	42	65	224	96848919	96789269	96809942	160	140	96861617	96480040
100	65	315	2	-	160	315L	All	42	65	224	96848919	96789269	96809942	160	140	96861617	96480040
100	65	315	2	-	200	315L	All	42	65	224	96848919	96789269	96809942	200	140	96861618	96796255
100	65	315	4	5.5	-	132S	All	42	38	160	96848914	96789247	96809941	95	140	96861607	96480016
100	65	315	4	7.5	7.5	132M	All	42	38	160	96848914	96789247	96809941	95	140	96861607	96480016
100	65	315	4	11	11	160M	All	42	42	180	96848915	96789247	96809941	95	140	96861609	96480016
100	65	315	4	15	15	160L	All	42	42	180	96848915	96789247	96809941	95	140	96861609	96480016
100	65	315	4	-	18.5	180M	All	42	48	200	96848916	96789269	96809942	110	140	96861611	96480017
100	65	315	4	-	22	180L	All	42	48	200	96848916	96789269	96809942	110	140	96861611	96480017
100	80	125	2	4	-	112M	All	24	28	140	96848895	96789247	96809940	95	100	96579722	96480016

Pump type			Motor data					Shaft dia.		Grundfos standard coupling				Grundfos spacer coupling			
			Pole	Power [kW]		Frame size	Make	Pump	Motor	Coupling diameter	Coupling complete	Rubber	Bolts	Coupling diameter	Spacer length	Coupling complete	Rubber
				50 Hz	60 Hz			[mm]	[mm]	[mm]				[mm]	[mm]		
100	80	125	2	5.5	-	132S	All	24	38	160	96848896	96789247	96809941	95	100	96579726	96480016
100	80	125	2	7.5	7.5	132S	All	24	38	160	96848896	96789247	96809941	95	100	96579726	96480016
100	80	125	2	11	11	160M	All	24	42	180	96848897	96789247	96809941	95	100	96579731	96480016
100	80	125	2	-	15	160M	All	24	42	180	96848897	96789247	96809941	95	100	96579731	96480016
100	80	125	2	-	18.5	160L	All	24	42	180	96848897	96789247	96809941	95	100	96579731	96480016
100	80	125	4	0.55	-	80A	All	24	19	125	96848893	96789247	96809939	95	100	96579719	96480016
100	80	125	4	0.75	-	80B	All	24	19	125	96848893	96789247	96809939	95	100	96579719	96480016
100	80	125	4	1.1	1.1	90S	All	24	24	125	96848894	96789247	96809939	95	100	96579720	96480016
100	80	125	4	-	1.5	90L	All	24	24	125	96848894	96789247	96809939	95	100	96579720	96480016
100	80	125	4	-	2.2	100L	All	24	28	140	96848895	96789247	96809940	95	100	96579722	96480016
100	80	160	2	7.5	-	132S	All	32	38	160	96848905	96789247	96809941	95	100	96579789	96480016
100	80	160	2	11	11	160M	All	32	42	180	96848906	96789247	96809941	95	100	96579801	96480016
100	80	160	2	15	15	160M	All	32	42	180	96848906	96789247	96809941	95	100	96579801	96480016
100	80	160	2	18.5	18.5	160L	All	32	42	180	96848906	96789247	96809941	95	100	96579801	96480016
100	80	160	2	-	22	180M	All	32	48	200	96848907	96789269	96809942	110	100	96861595	96480017
100	80	160	2	-	30	200L	All	32	55	200	96848908	96789269	96809942	125	100	96861597	96480018
100	80	160	4	0.75	0	80B	All	32	19	125	96848902	96789247	96809939	95	100	96579782	96480016
100	80	160	4	1.5	1.5	90L	All	32	24	125	96848903	96789247	96809939	95	100	96579784	96480016
100	80	160	4	2.2	2.2	100L	All	32	28	140	96848904	96789247	96809940	95	100	96579786	96480016
100	80	160	4	-	3	100L	All	32	28	140	96848904	96789247	96809940	95	100	96579786	96480016
100	80	160	4	-	4	112M	All	32	28	140	96848904	96789247	96809940	95	100	96579786	96480016
125	80	160	2	11	-	160M	All	32	42	180	96848906	96789247	96809941	95	140	96579802	96480016
125	80	160	2	15	-	160M	All	32	42	180	96848906	96789247	96809941	95	140	96579802	96480016
125	80	160	2	18.5	-	160L	All	32	42	180	96848906	96789247	96809941	95	140	96579802	96480016
125	80	160	2	22	22	180M	All	32	48	200	96848907	96789269	96809942	110	140	96579803	96480017
125	80	160	2	30	30	200L	All	32	55	200	96848908	96789269	96809942	125	140	96579804	96480018
125	80	160	2	-	37	200L	All	32	55	200	96848908	96789269	96809942	125	140	96579804	96480018
125	80	160	2	-	45	225M	All	32	55	200	96848908	96789269	96809942	125	140	96579804	96480018
125	80	160	2	-	55	250M	All	32	60	224	96848909	96789269	96809942	140	140	96579805	96480019
125	80	160	4	1.5	-	90L	All	32	24	125	96848903	96789247	96809939	95	140	96579785	96480016
125	80	160	4	2.2	-	100L	All	32	28	140	96848904	96789247	96809940	95	140	96579788	96480016
125	80	160	4	3	3	100L	All	32	28	140	96848904	96789247	96809940	95	140	96579788	96480016
125	80	160	4	4	4	112M	All	32	28	140	96848904	96789247	96809940	95	140	96579788	96480016
125	80	160	4	-	5.5	132S	All	32	38	160	96848905	96789247	96809941	95	140	96579800	96480016
125	80	200	2	22	-	180M	All	32	48	200	96848907	96789269	96809942	110	140	96579803	96480017
125	80	200	2	30	-	200L	All	32	55	200	96848908	96789269	96809942	125	140	96579804	96480018
125	80	200	2	37	37	200L	All	32	55	200	96848908	96789269	96809942	125	140	96579804	96480018
125	80	200	2	45	45	225M	All	32	55	200	96848908	96789269	96809942	125	140	96579804	96480018
125	80	200	2	55	55	250M	All	32	60	224	96848909	96789269	96809942	140	140	96579805	96480019
125	80	200	2	-	75	280S	All	32	65	224	96848910	96789269	96809942	160	140	96579806	96480040
125	80	200	2	-	90	280M	All	32	65	224	96848910	96789269	96809942	160	140	96579806	96480040
125	80	200	4	2.2	-	100L	All	32	28	140	96848904	96789247	96809940	95	140	96579788	96480016
125	80	200	4	3	-	100L	All	32	28	140	96848904	96789247	96809940	95	140	96579788	96480016
125	80	200	4	4	4	112M	All	32	28	140	96848904	96789247	96809940	95	140	96579788	96480016
125	80	200	4	5.5	5.5	132S	All	32	38	160	96848905	96789247	96809941	95	140	96579800	96480016
125	80	200	4	7.5	7.5	132M	All	32	38	160	96848905	96789247	96809941	95	140	96579800	96480016
125	80	200	4	-	11	160M	All	32	42	180	96848906	96789247	96809941	95	140	96579802	96480016
125	80	250	2	45	-	225M	All	32	55	200	96848908	96789269	96809942	125	140	96579804	96480018
125	80	250	2	55	-	250M	All	32	60	224	96848909	96789269	96809942	140	140	96579805	96480019
125	80	250	2	75	75	280S	All	32	65	224	96848910	96789269	96809942	160	140	96579806	96480040
125	80	250	2	90	90	280M	All	32	65	224	96848910	96789269	96809942	160	140	96579806	96480040

Pump type			Motor data					Shaft dia.		Grundfos standard coupling				Grundfos spacer coupling			
			Pole	Power [kW]		Frame size	Make	Pump	Motor	Coupling diameter	Coupling complete	Rubber	Bolts	Coupling diameter	Spacer length	Coupling complete	Rubber
				50 Hz	60 Hz			[mm]	[mm]	[mm]				[mm]	[mm]		
125	80	250	2	-	110	315S	All	32	65	224	96848910	96789269	96809942	160	140	96579806	96480040
125	80	250	2	-	132	315M	All	32	65	224	96848910	96789269	96809942	160	140	96579806	96480040
125	80	250	2	-	160	315L	All	32	65	224	96848910	96789269	96809942	160	140	96579806	96480040
125	80	250	4	5.5	-	132S	All	32	38	160	96848905	96789247	96809941	95	140	96579800	96480016
125	80	250	4	7.5	7.5	132M	All	32	38	160	96848905	96789247	96809941	95	140	96579800	96480016
125	80	250	4	11	11	160M	All	32	42	180	96848906	96789247	96809941	95	140	96579802	96480016
125	80	250	4	-	15	160L	All	32	42	180	96848906	96789247	96809941	95	140	96579802	96480016
125	80	250	4	-	18.5	180M	All	32	48	200	96848907	96789269	96809942	110	140	96579803	96480017
125	80	315	2	90	-	280M	All	42	65	224	96848919	96789269	96809942	160	140	96861617	96480040
125	80	315	2	110	-	315S	All	42	65	224	96848919	96789269	96809942	160	140	96861617	96480040
125	80	315	2	132	132	315M	All	42	65	224	96848919	96789269	96809942	160	140	96861617	96480040
125	80	315	2	160	160	315L	All	42	65	224	96848919	96789269	96809942	160	140	96861617	96480040
125	80	315	2	200	200	315L	All	42	65	224	96848919	96789269	96809942	200	140	96861618	96796255
125	80	315	2	-	250	355	MMG-E	42	75	250	96848921	96789274	96809943	180	140	96861623	96796254
125	80	315	2	-	250	315	MMG-G, EFF1	42	70	250	96848920	96789274	96809943	180	140	96861620	96796254
125	80	315	2	-	250	355	MMG-G, EFF2	42	75	250	96848921	96789274	96809943	180	140	96861623	96796254
125	80	315	2	-	280	315L	Siemens	42	65	224	96848919	96789269	96809942	200	140	96861618	96796255
125	80	315	4	11	-	160M	All	42	42	180	96848915	96789247	96809941	95	140	96861609	96480016
125	80	315	4	15	-	160L	All	42	42	180	96848915	96789247	96809941	95	140	96861609	96480016
125	80	315	4	18.5	18.5	180M	All	42	48	200	96848916	96789269	96809942	110	140	96861611	96480017
125	80	315	4	22	22	180L	All	42	48	200	96848916	96789269	96809942	110	140	96861611	96480017
125	80	315	4	-	30	200L	All	42	55	200	96848917	96789269	96809942	125	140	96861613	96480018
125	80	315	4	-	37	225S	All	42	60	224	96848918	96789269	96809942	140	140	96861615	96480019
125	80	315	4	-	45	225M	All	42	60	224	96848918	96789269	96809942	140	140	96861615	96480019
125	80	400	2	200	0	315L	All	48	65	224	96848930	96789269	96809942	200	180	96861635	96796255
125	80	400	2	250	0	315	All	48	65	224	96848930	96789269	96809942	200	180	96861635	96796255
125	80	400	2	315	0	315	All	48	65	224	96848930	96789269	96809942	200	180	96861635	96796255
125	80	400	4	18.5	-	180M	All	42	48	200	96848916	96789269	96809942	110	140	96861611	96480017
125	80	400	4	22	-	180L	All	42	48	200	96848916	96789269	96809942	110	140	96861611	96480017
125	80	400	4	30	30	200L	All	42	55	200	96848917	96789269	96809942	125	140	96861613	96480018
125	80	400	4	37	37	225S	All	42	60	224	96848918	96789269	96809942	140	140	96861615	96480019
125	80	400	4	45	45	225M	All	42	60	224	96848918	96789269	96809942	140	140	96861615	96480019
125	80	400	4	-	55	250M	Siemens, MMG-E	42	65	224	96848919	96789269	96809942	160	140	96861617	96480040
125	80	400	4	-	55	250S	MMG-G, EFF1 & EFF2	42	70	250	96848920	96789274	96809943	180	140	96861620	96796254
125	80	400	4	-	75	280S	Siemens, MMG-E	42	75	250	96848921	96789274	96809943	180	140	96861623	96796254
125	80	400	4	-	75	250M	MMG-G, EFF1& EFF2	42	70	250	96848920	96789274	96809943	180	140	96861620	96796254
125	80	400	4	-	90	280M	Siemens, MMG-E	42	75	250	96848921	96789274	96809943	180	140	96861623	96796254
125	80	400	4	-	90	280S	MMG-G, EFF1 & EFF2	42	80	250	96848922	96789274	96809943	200	140	96861626	96796255
125	80	400.1	2	132	0	315M	All	42	65	224	96848919	96789269	96809942	160	140	96861617	96480040
125	80	400.1	2	160	0	315L	All	42	65	224	96848919	96789269	96809942	160	140	96861617	96480040
125	80	400.1	2	200	0	315L	All	42	65	224	96848919	96789269	96809942	200	140	96861618	96796255
125	80	400.1	2	250	0	315	All	42	65	224	96848919	96789269	96809942	200	140	96861618	96796255
125	100	160	2	22	-	180M	All	32	48	200	96848907	96789269	96809942	110	140	96579803	96480017
125	100	160	2	30	-	200L	All	32	55	200	96848908	96789269	96809942	125	140	96579804	96480018
125	100	160	2	37	37	200L	All	32	55	200	96848908	96789269	96809942	125	140	96579804	96480018
125	100	160	2	-	45	225M	All	32	55	200	96848908	96789269	96809942	125	140	96579804	96480018
125	100	160	2	-	55	250M	All	32	60	224	96848909	96789269	96809942	140	140	96579805	96480019

Pump type			Motor data					Shaft dia.		Grundfos standard coupling				Grundfos spacer coupling			
			Pole	Power [kW]		Frame size	Make	Pump	Motor	Coupling diameter	Coupling complete	Rubber	Bolts	Coupling diameter	Spacer length	Coupling complete	Rubber
				50 Hz	60 Hz			[mm]	[mm]	[mm]				[mm]	[mm]		
125	100	160	2	-	75	280S	All	32	65	224	96848910	96789269	96809942	160	140	96579806	96480040
125	100	160	4	2.2	-	100L	All	32	28	140	96848904	96789247	96809940	95	140	96579788	96480016
125	100	160	4	3	-	100L	All	32	28	140	96848904	96789247	96809940	95	140	96579788	96480016
125	100	160	4	4	4	112M	All	32	28	140	96848904	96789247	96809940	95	140	96579788	96480016
125	100	160	4	-	5.5	132S	All	32	38	160	96848905	96789247	96809941	95	140	96579800	96480016
125	100	160	4	-	7.5	132M	All	32	38	160	96848905	96789247	96809941	95	140	96579800	96480016
125	100	160	6	0.55	-	80B	All	32	19	125	96848902	96789247	96809939	95	140	96579783	96480016
125	100	160	6	0.75	-	90S	All	32	24	125	96848903	96789247	96809939	95	140	96579785	96480016
125	100	160	6	1.1	1.1	90L	All	32	24	125	96848903	96789247	96809939	95	140	96579785	96480016
125	100	160	6	-	1.5	100L	All	32	28	140	96848904	96789247	96809940	95	140	96579788	96480016
125	100	160	6	-	2.2	112M	All	32	28	140	96848904	96789247	96809940	95	140	96579788	96480016
125	100	200	2	30	-	200L	All	32	55	200	96848908	96789269	96809942	125	140	96579804	96480018
125	100	200	2	37	-	200L	All	32	55	200	96848908	96789269	96809942	125	140	96579804	96480018
125	100	200	2	45	-	225M	All	32	55	200	96848908	96789269	96809942	125	140	96579804	96480018
125	100	200	2	55	55	250M	All	32	60	224	96848909	96789269	96809942	140	140	96579805	96480019
125	100	200	2	75	75	280S	All	32	65	224	96848910	96789269	96809942	160	140	96579806	96480040
125	100	200	2	-	90	280M	All	32	65	224	96848910	96789269	96809942	160	140	96579806	96480040
125	100	200	2	-	110	315S	All	32	65	224	96848910	96789269	96809942	160	140	96579806	96480040
125	100	200	2	-	132	315M	All	32	65	224	96848910	96789269	96809942	160	140	96579806	96480040
125	100	200	4	4	-	112M	All	32	28	140	96848904	96789247	96809940	95	140	96579788	96480016
125	100	200	4	5.5	5.5	132S	All	32	38	160	96848905	96789247	96809941	95	140	96579800	96480016
125	100	200	4	7.5	7.5	132M	All	32	38	160	96848905	96789247	96809941	95	140	96579800	96480016
125	100	200	4	11	11	160M	All	32	42	180	96848906	96789247	96809941	95	140	96579802	96480016
125	100	200	4	-	15	160L	All	32	42	180	96848906	96789247	96809941	95	140	96579802	96480016
125	100	200	4	-	18.5	180M	All	32	48	200	96848907	96789269	96809942	110	140	96579803	96480017
125	100	200	6	1.1	-	90L	All	32	24	125	96848903	96789247	96809939	95	140	96579785	96480016
125	100	200	6	1.5	1.5	100L	All	32	28	140	96848904	96789247	96809940	95	140	96579788	96480016
125	100	200	6	2.2	2.2	112M	All	32	28	140	96848904	96789247	96809940	95	140	96579788	96480016
125	100	200	6	3	3	132SA	All	32	38	160	96848905	96789247	96809941	95	140	96579800	96480016
125	100	200	6	-	4	132MA	All	32	38	160	96848905	96789247	96809941	95	140	96579800	96480016
125	100	200	6	-	5.5	132MB	All	32	38	160	96848905	96789247	96809941	95	140	96579800	96480016
125	100	250	2	55	-	250M	All	42	60	224	96848918	96789269	96809942	140	140	96861615	96480019
125	100	250	2	75	-	280S	All	42	65	224	96848919	96789269	96809942	160	140	96861617	96480040
125	100	250	2	90	-	280M	All	42	65	224	96848919	96789269	96809942	160	140	96861617	96480040
125	100	250	2	110	110	315S	All	42	65	224	96848919	96789269	96809942	160	140	96861617	96480040
125	100	250	2	132	132	315M	All	42	65	224	96848919	96789269	96809942	160	140	96861617	96480040
125	100	250	2	-	160	315L	All	42	65	224	96848919	96789269	96809942	160	140	96861617	96480040
125	100	250	2	-	200	315L	All	42	65	224	96848919	96789269	96809942	160	140	96861617	96480040
125	100	250	2	-	250	355	MMG-E	42	75	250	96848921	96789274	96809943	180	140	96861623	96796254
125	100	250	2	-	250	315	MMG-G, EFF1	42	70	250	96848920	96789274	96809943	180	140	96861620	96796254
125	100	250	2	-	250	355	MMG-G, EFF2	42	75	250	96848921	96789274	96809943	180	140	96861623	96796254
125	100	250	2	-	280	315L	Siemens	42	65	224	96848919	96789269	96809942	200	140	96861618	96796255
125	100	250	4	7.5	-	132M	All	42	38	160	96848914	96789247	96809941	95	140	96861607	96480016
125	100	250	4	11	-	160M	All	42	42	180	96848915	96789247	96809941	95	140	96861609	96480016
125	100	250	4	15	15	160L	All	42	42	180	96848915	96789247	96809941	95	140	96861609	96480016
125	100	250	4	18.5	18.5	180M	All	42	48	200	96848916	96789269	96809942	110	140	96861611	96480017
125	100	250	4	-	22	180L	All	42	48	200	96848916	96789269	96809942	110	140	96861611	96480017
125	100	250	4	-	30	200L	All	42	55	200	96848917	96789269	96809942	125	140	96861613	96480018
125	100	250	6	2.2	-	112M	All	42	28	160	96848913	96789247	96809941	95	140	96861606	96480016
125	100	250	6	3	-	132SA	All	42	38	160	96848914	96789247	96809941	95	140	96861607	96480016
125	100	250	6	4	4	132MA	All	42	38	160	96848914	96789247	96809941	95	140	96861607	96480016

Pump type			Motor data					Shaft dia.		Grundfos standard coupling				Grundfos spacer coupling			
			Pole	Power [kW]		Frame size	Make	Pump	Motor	Coupling diameter	Coupling complete	Rubber	Bolts	Coupling diameter	Spacer length	Coupling complete	Rubber
				50 Hz	60 Hz			[mm]	[mm]	[mm]				[mm]	[mm]		
125	100	250	6	5.5	5.5	132MB	All	42	38	160	96848914	96789247	96809941	95	140	96861607	96480016
125	100	250	6	-	7.5	160M	All	42	42	180	96848915	96789247	96809941	95	140	96861609	96480016
125	100	250	6	-	11	160L	All	42	42	180	96848915	96789247	96809941	95	140	96861609	96480016
125	100	315	2	110	-	315S	All	42	65	224	96848919	96789269	96809942	160	140	96861617	96480040
125	100	315	2	132	-	315M	All	42	65	224	96848919	96789269	96809942	160	140	96861617	96480040
125	100	315	2	160	-	315L	All	42	65	224	96848919	96789269	96809942	160	140	96861617	96480040
125	100	315	2	200	-	315L	All	42	65	224	96848919	96789269	96809942	160	140	96861617	96480040
125	100	315	4	15	-	160L	All	42	42	180	96848915	96789247	96809941	95	140	96861609	96480016
125	100	315	4	18.5	-	180M	All	42	48	200	96848916	96789269	96809942	110	140	96861611	96480017
125	100	315	4	22	22	180L	All	42	48	200	96848916	96789269	96809942	110	140	96861611	96480017
125	100	315	4	30	30	200L	All	42	55	200	96848917	96789269	96809942	125	140	96861613	96480018
125	100	315	4	-	37	225S	All	42	60	224	96848918	96789269	96809942	140	140	96861615	96480019
125	100	315	4	-	45	225M	All	42	60	224	96848918	96789269	96809942	140	140	96861615	96480019
125	100	315	4	-	55	250M	Siemens, MMG-E	42	65	224	96848919	96789269	96809942	160	140	96861617	96480040
125	100	315	4	-	55	250S	MMG-G, EFF1 & EFF2	42	70	250	96848920	96789274	96809943	180	140	96861620	96796254
125	100	315	6	4	-	132MA	All	42	38	160	96848914	96789247	96809941	95	140	96861607	96480016
125	100	315	6	5.5	-	132MB	All	42	38	160	96848914	96789247	96809941	95	140	96861607	96480016
125	100	315	6	7.5	7.5	160M	All	42	42	180	96848915	96789247	96809941	95	140	96861609	96480016
125	100	315	6	11	11	160L	All	42	42	180	96848915	96789247	96809941	95	140	96861609	96480016
125	100	315	6	-	15	180L	All	42	48	200	96848916	96789269	96809942	110	140	96861611	96480017
125	100	400	4	22	-	180L	All	42	48	200	96848916	96789269	96809942	110	140	96861611	96480017
125	100	400	4	30	-	200L	All	42	55	200	96848917	96789269	96809942	125	140	96861613	96480018
125	100	400	4	37	37	225S	All	42	60	224	96848918	96789269	96809942	140	140	96861615	96480019
125	100	400	4	45	45	225M	All	42	60	224	96848918	96789269	96809942	140	140	96861615	96480019
125	100	400	4	55	55	250M	Siemens, MMG-E	42	65	224	96848919	96789269	96809942	160	140	96861617	96480040
125	100	400	4	55	55	250S	MMG-G, EFF1 & EFF2	42	70	250	96848920	96789274	96809943	180	140	96861620	96796254
125	100	400	4	-	75	280S	Siemens, MMG-E	42	75	250	96848921	96789274	96809943	180	140	96861623	96796254
125	100	400	4	-	75	250M	MMG-G, EFF1& EFF2	42	70	250	96848920	96789274	96809943	180	140	96861620	96796254
125	100	400	4	-	90	280M	Siemens, MMG-E	42	75	250	96848921	96789274	96809943	180	140	96861623	96796254
125	100	400	4	-	90	280S	MMG-G, EFF1 & EFF2	42	80	250	96848922	96789274	96809943	200	140	96861626	96796255
125	100	400	6	7.5	-	160M	All	42	42	180	96848915	96789247	96809941	95	140	96861609	96480016
125	100	400	6	11	11	160L	All	42	42	180	96848915	96789247	96809941	95	140	96861609	96480016
125	100	400	6	15	15	180L	All	42	48	200	96848916	96789269	96809942	110	140	96861611	96480017
125	100	400	6	18.5	18.5	200LA	All	42	55	200	96848917	96789269	96809942	125	140	96861613	96480018
125	100	400	6	-	22	200LB	All	42	55	200	96848917	96789269	96809942	125	140	96861613	96480018
125	100	400	6	-	30	225M	All	42	60	224	96848918	96789269	96809942	140	140	96861615	96480019
150	125	200	2	45	-	225M	All	32	55	200	96848908	96789269	96809942	125	140	96579804	96480018
150	125	200	2	55	-	250M	All	32	60	224	96848909	96789269	96809942	140	140	96579805	96480019
150	125	200	2	75	75	280S	All	32	65	224	96848910	96789269	96809942	160	140	96579806	96480040
150	125	200	2	90	90	280S	All	32	65	224	96848910	96789269	96809942	160	140	96579806	96480040
150	125	200	2	110	110	315S	All	32	65	224	96848910	96789269	96809942	160	140	96579806	96480040
150	125	200	2	-	132	315M	All	32	65	224	96848910	96789269	96809942	160	140	96579806	96480040
150	125	200	2	-	160	315L	All	32	65	224	96848910	96789269	96809942	160	140	96579806	96480040
150	125	200	2	-	200	315L	All	32	65	224	96848910	96789269	96809942	160	140	96579806	96480040
150	125	200	4	5.5	-	132S	All	32	38	160	96848905	96789247	96809941	95	140	96579800	96480016
150	125	200	4	7.5	-	132M	All	32	38	160	96848905	96789247	96809941	95	140	96579800	96480016

Pump type			Motor data					Shaft dia.		Grundfos standard coupling				Grundfos spacer coupling			
			Pole	Power [kW]		Frame size	Make	Pump	Motor	Coupling diameter	Coupling complete	Rubber	Bolts	Coupling diameter	Spacer length	Coupling complete	Rubber
				50 Hz	60 Hz			[mm]	[mm]	[mm]				[mm]	[mm]		
150	125	200	4	11	11	160M	All	32	42	180	96848906	96789247	96809941	95	140	96579802	96480016
150	125	200	4	15	15	160L	All	32	42	180	96848906	96789247	96809941	95	140	96579802	96480016
150	125	200	4	-	18.5	180M	All	32	48	200	96848907	96789269	96809942	110	140	96579803	96480017
150	125	200	4	-	22	180L	All	32	48	200	96848907	96789269	96809942	110	140	96579803	96480017
150	125	200	6	1.5	-	100L	All	32	28	140	96848904	96789247	96809940	95	140	96579788	96480016
150	125	200	6	2.2	-	112M	All	32	28	140	96848904	96789247	96809940	95	140	96579788	96480016
150	125	200	6	3	3	132SA	All	32	38	160	96848905	96789247	96809941	95	140	96579800	96480016
150	125	200	6	4	4	132MA	All	32	38	160	96848905	96789247	96809941	95	140	96579800	96480016
150	125	200	6	-	5.5	132MB	All	32	38	160	96848905	96789247	96809941	95	140	96579800	96480016
150	125	200	6	-	7.5	160M	All	32	42	180	96848906	96789247	96809941	95	140	96579802	96480016
150	125	250	2	90	-	280S	All	42	65	224	96848919	96789269	96809942	160	140	96861617	96480040
150	125	250	2	110	-	315S	All	42	65	224	96848919	96789269	96809942	160	140	96861617	96480040
150	125	250	2	132	-	315M	All	42	65	224	96848919	96789269	96809942	160	140	96861617	96480040
150	125	250	2	160	160	315L	All	42	65	224	96848919	96789269	96809942	160	140	96861617	96480040
150	125	250	2	200	200	315L	All	42	65	224	96848919	96789269	96809942	160	140	96861617	96480040
150	125	250	2	-	250	355	MMG-E	42	75	250	96848921	96789274	96809943	180	140	96861623	96796254
150	125	250	2	-	250	315	MMG-G, EFF1	42	70	250	96848920	96789274	96809943	180	140	96861620	96796254
150	125	250	2	-	250	355	MMG-G, EFF2	42	75	250	96848921	96789274	96809943	180	140	96861623	96796254
150	125	250	2	-	280	315L	Siemens	42	65	224	96848919	96789269	96809942	200	140	96861618	96796255
150	125	250	2	-	315	355	MMG-E	42	75	250	96848921	96789274	96809943	200	140	96861624	96796255
150	125	250	2	-	315	315	MMG-G, EFF1	42	70	250	96848920	96789274	96809943	200	140	96861621	96796255
150	125	250	2	-	315	355	MMG-G, EFF2	42	75	250	96848921	96789274	96809943	200	140	96861624	96796255
150	125	250	2	-	353	315L	Siemens	42	65	224	96848919	96789269	96809942	200	140	96861618	96796255
150	125	250	4	11	-	160M	All	42	42	180	96848915	96789247	96809941	95	140	96861609	96480016
150	125	250	4	15	-	160L	All	42	42	180	96848915	96789247	96809941	95	140	96861609	96480016
150	125	250	4	18.5	18.5	180M	All	42	48	200	96848916	96789269	96809942	110	140	96861611	96480017
150	125	250	4	22	22	180L	All	42	48	200	96848916	96789269	96809942	110	140	96861611	96480017
150	125	250	4	30	30	200L	All	42	55	200	96848917	96789269	96809942	125	140	96861613	96480018
150	125	250	4	-	37	225S	All	42	60	224	96848918	96789269	96809942	140	140	96861615	96480019
150	125	250	4	-	45	225M	All	42	60	224	96848918	96789269	96809942	140	140	96861615	96480019
150	125	250	6	3	-	132SA	All	42	38	160	96848914	96789247	96809941	95	140	96861607	96480016
150	125	250	6	4	-	132MA	All	42	38	160	96848914	96789247	96809941	95	140	96861607	96480016
150	125	250	6	5.5	5.5	132MB	All	42	38	160	96848914	96789247	96809941	95	140	96861607	96480016
150	125	250	6	7.5	7.5	160M	All	42	42	180	96848915	96789247	96809941	95	140	96861609	96480016
150	125	250	6	-	11	160L	All	42	42	180	96848915	96789247	96809941	95	140	96861609	96480016
150	125	250	6	-	15	180L	All	42	48	200	96848916	96789269	96809942	110	140	96861611	96480017
150	125	315	2	132	-	315M	All	42	65	224	96848919	96789269	96809942	160	140	96861617	96480040
150	125	315	2	160	-	315L	All	42	65	224	96848919	96789269	96809942	160	140	96861617	96480040
150	125	315	2	200	-	315L	All	42	65	224	96848919	96789269	96809942	160	140	96861617	96480040
150	125	315	2	250	-	355	MMG-E	42	75	250	96848921	96789274	96809943	180	140	96861623	96796254
150	125	315	2	250	-	315	MMG-G, EFF1	42	70	250	96848920	96789274	96809943	180	140	96861620	96796254
150	125	315	2	250	-	355	MMG-G, EFF2	42	75	250	96848921	96789274	96809943	180	140	96861623	96796254
150	125	315	2	250	-	315L	Siemens	42	65	224	96848919	96789269	96809942	200	140	96861618	96796255
150	125	315	4	18.5	-	180M	All	42	48	200	96848916	96789269	96809942	110	140	96861611	96480017
150	125	315	4	22	-	180L	All	42	48	200	96848916	96789269	96809942	110	140	96861611	96480017
150	125	315	4	30	30	200L	All	42	55	200	96848917	96789269	96809942	125	140	96861613	96480018
150	125	315	4	37	37	225S	All	42	60	224	96848918	96789269	96809942	140	140	96861615	96480019
150	125	315	4	45	45	225M	All	42	60	224	96848918	96789269	96809942	140	140	96861615	96480019
150	125	315	4	-	55	250M	Siemens, MMG-E	42	65	224	96848919	96789269	96809942	160	140	96861617	96480040
150	125	315	4	-	55	250S	MMG-G, EFF1 & EFF2	42	70	250	96848920	96789274	96809943	180	140	96861620	96796254

Pump type			Motor data					Shaft dia.		Grundfos standard coupling				Grundfos spacer coupling				
			Pole	Power [kW]		Frame size	Make	Pump	Motor	Coupling diameter	Coupling complete	Rubber	Bolts	Coupling diameter	Spacer length	Coupling complete	Rubber
				50 Hz	60 Hz			[mm]	[mm]	[mm]				[mm]	[mm]		
150	125	315	4	-	75	280S	Siemens, MMG-E	42	75	250	96848921	96789274	96809943	180	140	96861623	96796254
150	125	315	4	-	75	250M	MMG-G, EFF1& EFF2	42	70	250	96848920	96789274	96809943	180	140	96861620	96796254
150	125	315	6	5.5	-	132MB	All	42	38	160	96848914	96789247	96809941	95	140	96861607	96480016
150	125	315	6	7.5	7.5	160M	All	42	42	180	96848915	96789247	96809941	95	140	96861609	96480016
150	125	315	6	11	11	160L	All	42	42	180	96848915	96789247	96809941	95	140	96861609	96480016
150	125	315	6	15	15	180L	All	42	48	200	96848916	96789269	96809942	110	140	96861611	96480017
150	125	315	6	-	18.5	200LA	All	42	55	200	96848917	96789269	96809942	125	140	96861613	96480018
150	125	315	6	-	22	200LB	All	42	55	200	96848917	96789269	96809942	125	140	96861613	96480018
150	125	400	4	37	-	225S	All	42	60	224	96848918	96789269	96809942	140	140	96861615	96480019
150	125	400	4	45	-	225M	All	42	60	224	96848918	96789269	96809942	140	140	96861615	96480019
150	125	400	4	55	55	250M	Siemens, MMG-E	42	65	224	96848919	96789269	96809942	160	140	96861617	96480040
150	125	400	4	55	55	250S	MMG-G, EFF1 & EFF2	42	70	250	96848920	96789274	96809943	180	140	96861620	96796254
150	125	400	4	75	75	280S	Siemens, MMG-E	42	75	250	96848921	96789274	96809943	180	140	96861623	96796254
150	125	400	4	75	75	250M	MMG-G, EFF1& EFF2	42	70	250	96848920	96789274	96809943	180	140	96861620	96796254
150	125	400	4	90	90	280M	Siemens, MMG-E	42	75	250	96848921	96789274	96809943	180	140	96861623	96796254
150	125	400	4	90	90	280S	MMG-G, EFF1 & EFF2	42	80	250	96848922	96789274	96809943	200	140	96861626	96796255
150	125	400	4	-	110	315S	Siemens, MMG-E	42	80	250	96848922	96789274	96809943	200	140	96861626	96796255
150	125	400	4	-	110	280M	MMG-G, EFF1 & EFF2	42	80	250	96848922	96789274	96809943	200	140	96861626	96796255
150	125	400	4	-	132	315M	Siemens, MMG-E	42	80	250	96848922	96789274	96809943	200	140	96861626	96796255
150	125	400	4	-	132	315S	MMG-G, EFF1 & EFF2	42	85	250	96848923	96789274	96809943	200	140	96861628	96796255
150	125	400	6	11	-	160L	All	42	42	180	96848915	96789247	96809941	95	140	96861609	96480016
150	125	400	6	15	-	180L	All	42	48	200	96848916	96789269	96809942	110	140	96861611	96480017
150	125	400	6	18.5	18.5	200LA	All	42	55	200	96848917	96789269	96809942	125	140	96861613	96480018
150	125	400	6	22	22	200LB	All	42	55	200	96848917	96789269	96809942	125	140	96861613	96480018
150	125	400	6	30	30	225M	All	42	60	224	96848918	96789269	96809942	140	140	96861615	96480019
150	125	400	6	-	37	250M	Siemens, MMG-E	42	65	224	96848919	96789269	96809942	160	140	96861617	96480040
150	125	400	6	-	37	250S	MMG-G, EFF1 & EFF2	42	70	250	96848920	96789274	96809943	180	140	96861620	96796254
150	125	400	6	-	45	280S	Siemens, MMG-E	42	75	250	96848921	96789274	96809943	180	140	96861623	96796254
150	125	400	6	-	45	250M	MMG-G, EFF1 & EFF2	42	70	250	96848920	96789274	96809943	180	140	96861620	96796254
150	125	500	4	55	-	250M	Siemens, MMG-E	60	65	224	96848940	96789269	96809942	160	180	96861648	96480040
150	125	500	4	55	-	250S	MMG-G, EFF1 & EFF2	60	70	250	96848941	96789274	96809943	180	180	96861650	96796254
150	125	500	4	75	-	280S	Siemens, MMG-E	60	75	250	96848942	96789274	96809943	180	180	96861651	96796254
150	125	500	4	75	-	250M	MMG-G, EFF1& EFF2	60	70	250	96848941	96789274	96809943	180	180	96861650	96796254
150	125	500	4	90	-	280M	Siemens, MMG-E	60	75	250	96848942	96789274	96809943	180	180	96861651	96796254
150	125	500	4	90	-	280S	MMG-G, EFF1 & EFF2	60	80	250	96848943	96789274	96809943	200	180	96861653	96796255
150	125	500	4	110	110	315S	Siemens, MMG-E	60	80	250	96848943	96789274	96809943	200	180	96861653	96796255

Pump type			Motor data					Shaft dia.		Grundfos standard coupling				Grundfos spacer coupling			
			Pole	Power [kW]		Frame size	Make	Pump	Motor	Coupling diameter	Coupling complete	Rubber	Bolts	Coupling diameter	Spacer length	Coupling complete	Rubber
				50 Hz	60 Hz			[mm]	[mm]	[mm]				[mm]	[mm]		
150	125	500	4	110	110	280M	MMG-G, EFF1 & EFF2	60	80	250	96848943	96789274	96809943	200	180	96861653	96796255
150	125	500	4	132	132	315M	Siemens, MMG-E	60	80	250	96848943	96789274	96809943	200	180	96861653	96796255
150	125	500	4	132	132	315S	MMG-G, EFF1 & EFF2	60	85	250	96848944	96789274	96809943	225	180	96861654	96796259
150	125	500	4	160	160	315M	Siemens, MMG-E	60	80	250	96848943	96789274	96809943	200	180	96861653	96796255
150	125	500	4	160	160	315M	MMG-G, EFF1 & EFF2	60	85	250	96848944	96789274	96809943	225	180	96861654	96796259
150	125	500	4	-	200	315L	Siemens, MMG-E	60	80	250	96848943	96789274	96809943	200	180	96861653	96796255
150	125	500	4	-	200	315M	MMG-G, EFF1 & EFF2	60	85	250	96848944	96789274	96809943	225	180	96861654	96796259
150	125	500	4	-	250	315C	MMG-G, EFF1	60	95	250	96848945	96789274	96809943	225	180	96861656	96796259
150	125	500	4	-	250	355M	MMG-G, EFF2	60	95	250	96848945	96789274	96809943	225	180	96861656	96796259
150	125	500	4	-	250	355M	MMG-E	60	95	250	96848945	96789274	96809943	225	180	96861656	96796259
150	125	500	4	-	288	315L	Siemens	60	85	250	96848944	96789274	96809943	225	180	96861654	96796259
150	125	500	4	-	315	315D	MMG-G, EFF1	60	95	250	96848945	96789274	96809943	250	180	96861657	96796260
150	125	500	4	-	315	355L	MMG-G, EFF2	60	95	250	96848945	96789274	96809943	250	180	96861657	96796260
150	125	500	4	-	315	355L	MMG-E	60	95	250	96848945	96789274	96809943	250	180	96861657	96796260
150	125	500	4	-	362	315L	Siemens	60	85	250	96848944	96789274	96809943	250	180	96861655	96796260
150	125	500	6	18.5	-	200LA	All	60	55	200	96848938	96789269	96809942	140	180	96861646	96480019
150	125	500	6	22	-	200LB	All	60	55	200	96848938	96789269	96809942	140	180	96861646	96480019
150	125	500	6	30	-	225M	All	60	60	224	96848939	96789269	96809942	140	180	96861647	96480019
150	125	500	6	37	37	250M	Siemens, MMG-E	60	65	224	96848940	96789269	96809942	160	180	96861648	96480040
150	125	500	6	37	37	250S	MMG-G, EFF1 & EFF2	60	70	250	96848941	96789274	96809943	180	180	96861650	96796254
150	125	500	6	45	45	280S	Siemens, MMG-E	60	75	250	96848942	96789274	96809943	180	180	96861651	96796254
150	125	500	6	45	45	250M	MMG-G, EFF1 & EFF2	60	70	250	96848941	96789274	96809943	180	180	96861650	96796254
150	125	500	6	55	55	280M	Siemens, MMG-E	60	75	250	96848942	96789274	96809943	180	180	96861651	96796254
150	125	500	6	55	55	280S	MMG-G, EFF1 & EFF2	60	80	250	96848943	96789274	96809943	200	180	96861653	96796255
150	125	500	6	-	75	315S	Siemens, MMG-E	60	80	250	96848943	96789274	96809943	200	180	96861653	96796255
150	125	500	6	-	75	280M	MMG-G, EFF1 & EFF2	60	80	250	96848943	96789274	96809943	200	180	96861653	96796255
150	125	500	6	-	90	315M	Siemens, MMG-E	60	80	250	96848943	96789274	96809943	200	180	96861653	96796255
150	125	500	6	-	90	315S	MMG-G, EFF1 & EFF2	60	85	250	96848944	96789274	96809943	225	180	96861654	96796259
200	150	200	2	75	-	280S	All	32	65	224	96848910	96789269	96809942	160	180	96861602	96480040
200	150	200	2	90	-	280M	All	32	65	224	96848910	96789269	96809942	160	180	96861602	96480040
200	150	200	2	110	110	315S	All	32	65	224	96848910	96789269	96809942	160	180	96861602	96480040
200	150	200	2	-	132	315M	All	32	65	224	96848910	96789269	96809942	160	180	96861602	96480040
200	150	200	2	-	160	315L	All	32	65	224	96848910	96789269	96809942	160	180	96861602	96480040
200	150	200	2	-	200	315L	All	32	65	224	96848910	96789269	96809942	160	180	96861602	96480040
200	150	200	4	7.5	-	132M	All	32	38	160	96848905	96789247	96809941	110	180	96861593	96480017
200	150	200	4	11	-	160M	All	32	42	180	96848906	96789247	96809941	110	180	96861594	96480017
200	150	200	4	15	15	160L	All	32	42	180	96848906	96789247	96809941	110	180	96861594	96480017
200	150	200	4	-	18.5	180M	All	32	48	200	96848907	96789269	96809942	110	180	96861596	96480017
200	150	200	4	-	22	180L	All	32	48	200	96848907	96789269	96809942	110	180	96861596	96480017
200	150	200	6	2.2	-	112M	All	32	28	140	96848904	96789247	96809940	110	180	96861592	96480017

Pump type			Motor data					Shaft dia.		Grundfos standard coupling				Grundfos spacer coupling			
			Pole	Power [kW]		Frame size	Make	Pump	Motor	Coupling diameter	Coupling complete	Rubber	Bolts	Coupling diameter	Spacer length	Coupling complete	Rubber
				50 Hz	60 Hz			[mm]	[mm]	[mm]				[mm]	[mm]		
200	150	200	6	3	-	132SA	All	32	38	160	96848905	96789247	96809941	110	180	96861593	96480017
200	150	200	6	4	4	132MA	All	32	38	160	96848905	96789247	96809941	110	180	96861593	96480017
200	150	200	6	-	5.5	132MB	All	32	38	160	96848905	96789247	96809941	110	180	96861593	96480017
200	150	200	6	-	7.5	160M	All	32	42	180	96848906	96789247	96809941	110	180	96861594	96480017
200	150	250	2	132	-	315M	All	42	65	224	96848919	96789269	96809942	200	180	96861619	96796255
200	150	250	2	160	-	315L	All	42	65	224	96848919	96789269	96809942	200	180	96861619	96796255
200	150	250	2	200	-	315L	All	42	65	224	96848919	96789269	96809942	200	180	96861619	96796255
200	150	250	2	250	250	355	MMG-E	42	75	250	96848921	96789274	96809943	200	180	96861625	96796255
200	150	250	2	250	250	315	MMG-G, EFF1	42	70	250	96848920	96789274	96809943	200	180	96861622	96796255
200	150	250	2	250	250	355	MMG-G, EFF2	42	75	250	96848921	96789274	96809943	200	180	96861625	96796255
200	150	250	2	250	280	315L	Siemens	42	65	224	96848919	96789269	96809942	200	180	96861619	96796255
200	150	250	2	-	315	355	MMG-E	42	75	250	96848921	96789274	96809943	200	180	96861625	96796255
200	150	250	2	-	315	315	MMG-G, EFF1	42	70	250	96848920	96789274	96809943	200	180	96861622	96796255
200	150	250	2	-	315	355	MMG-G, EFF2	42	75	250	96848921	96789274	96809943	200	180	96861625	96796255
200	150	250	2	-	353	315L	Siemens	42	65	224	96848919	96789269	96809942	200	180	96861619	96796255
200	150	250	4	15	-	160L	All	42	42	180	96848915	96789247	96809941	110	180	96861610	96480017
200	150	250	4	18.5	-	180M	All	42	48	200	96848916	96789269	96809942	110	180	96861612	96480017
200	150	250	4	22	-	180L	All	42	48	200	96848916	96789269	96809942	110	180	96861612	96480017
200	150	250	4	30	30	200L	All	42	55	200	96848917	96789269	96809942	125	180	96861614	96480018
200	150	250	4	37	37	225S	All	42	60	224	96848918	96789269	96809942	140	180	96861616	96480019
200	150	250	4	45	45	225M	All	42	60	224	96848918	96789269	96809942	140	180	96861616	96480019
200	150	250	4	-	55	250M	Siemens, MMG-E	42	65	224	96848919	96789269	96809942	200	180	96861619	96796255
200	150	250	4	-	55	250S	MMG-G, EFF1 & EFF2	42	70	250	96848920	96789274	96809943	200	180	96861622	96796255
200	150	250	4	-	75	280S	Siemens, MMG-E	42	75	250	96848921	96789274	96809943	200	180	96861625	96796255
200	150	250	4	-	75	250M	MMG-G, EFF1& EFF2	42	70	250	96848920	96789274	96809943	200	180	96861622	96796255
200	150	250	6	5.5	-	132MB	All	42	38	160	96848914	96789247	96809941	110	180	96861608	96480017
200	150	250	6	7.5	-	160M	All	42	42	180	96848915	96789247	96809941	110	180	96861610	96480017
200	150	250	6	11	11	160L	All	42	42	180	96848915	96789247	96809941	110	180	96861610	96480017
200	150	250	6	-	15	180L	All	42	48	200	96848916	96789269	96809942	110	180	96861612	96480017
200	150	250	6	-	18.5	200LA	All	42	55	200	96848917	96789269	96809942	125	180	96861614	96480018
200	150	315	2	250	-	355	MMG-E	48	75	250	96848932	96789274	96809943	180	180	96861638	96796254
200	150	315	2	250	-	315	MMG-G, EFF1	48	70	250	96848931	96789274	96809943	180	180	96861636	96796254
200	150	315	2	250	-	355	MMG-G, EFF2	48	75	250	96848932	96789274	96809943	180	180	96861638	96796254
200	150	315	2	250	-	315L	Siemens	48	65	224	96848930	96789269	96809942	200	180	96861635	96796255
200	150	315	2	315	-	355	MMG-E	48	75	250	96848932	96789274	96809943	200	180	96861639	96796255
200	150	315	2	315	-	315	MMG-G, EFF1	48	70	250	96848931	96789274	96809943	200	180	96861637	96796255
200	150	315	2	315	-	355	MMG-G, EFF2	48	75	250	96848932	96789274	96809943	200	180	96861639	96796255
200	150	315	2	315	-	315L	Siemens	48	65	224	96848930	96789269	96809942	200	180	96861635	96796255
200	150	315	2	355	-	355	MMG-G, EFF1	48	70	250	96848931	96789274	96809943	200	180	96861637	96796255
200	150	315	2	355	-	355	Siemens	48	75	250	96848932	96789274	96809943	200	180	96861639	96796255
200	150	315.1	2	355	398	355L	Siemens	48	65	224	96848930	96789269	96809942	200	180	96861635	96796255
200	150	315.1	2	355	0	355L	MMG-E	48	75	250	96848932	96789274	96809943	180	180	96861638	96796254
200	150	315.1	2	355	0	355	MMG-G EFF1 & EFF2	48	70	250	96848931	96789274	96809943	180	180	96861636	96796254
200	150	315.1	2	315	353	315	Siemens	48	65	224	96848930	96789269	96809942	200	180	96861635	96796255
200	150	315.1	2	315	-	355	MMG-E	48	75	250	96848932	96789274	96809943	200	180	96861639	96796255
200	150	315.1	2	315	-	315	MMG-G, EFF1	48	70	250	96848931	96789274	96809943	200	180	96861637	96796255
200	150	315.1	2	315	-	355	MMG-G, EFF2	48	75	250	96848932	96789274	96809943	200	180	96861639	96796255
200	150	315.1	2	250	-	315	MMG-E	48	75	250	96848932	96789274	96809943	180	180	96861638	96796254

Pump type			Motor data					Shaft dia.		Grundfos standard coupling				Grundfos spacer coupling			
			Pole	Power [kW]		Frame size	Make	Pump	Motor	Coupling diameter	Coupling complete	Rubber	Bolts	Coupling diameter	Spacer length	Coupling complete	Rubber
				50 Hz	60 Hz			[mm]	[mm]	[mm]				[mm]	[mm]		
200	150	315.1	2	250	-	315	MMG-G, EFF1	48	70	250	96848931	96789274	96809943	180	180	96861636	96796254
200	150	315.1	2	250	-	315	MMG-G, EFF2	48	75	250	96848932	96789274	96809943	180	180	96861638	96796254
200	150	315.1	2	250	-	315	Siemens	48	65	224	96848930	96789269	96809942	200	180	96861635	96796255
200	150	315.1	2	200	-	315L	All	48	65	224	96848930	96789269	96809942	200	180	96861635	96796255
200	150	315.1	2	160	-	315L	All	48	65	224	96848930	96789269	96809942	200	180	96861635	96796255
200	150	315	4	37	-	225S	All	48	60	224	96848929	96789269	96809942	140	180	96861633	96480019
200	150	315	4	45	-	225M	All	48	60	224	96848929	96789269	96809942	140	180	96861633	96480019
200	150	315	4	55	55	250M	Siemens, MMG-E	48	65	224	96848930	96789269	96809942	160	180	96861634	96480040
200	150	315	4	55	55	250S	MMG-G, EFF1 & EFF2	48	70	250	96848931	96789274	96809943	180	180	96861636	96796254
200	150	315	4	75	75	280S	Siemens, MMG-E	48	75	250	96848932	96789274	96809943	180	180	96861638	96796254
200	150	315	4	75	75	250M	MMG-G, EFF1& EFF2	48	70	250	96848931	96789274	96809943	180	180	96861636	96796254
200	150	315	4	90	90	280M	Siemens, MMG-E	48	75	250	96848932	96789274	96809943	180	180	96861638	96796254
200	150	315	4	90	90	280S	MMG-G, EFF1 & EFF2	48	80	250	96848933	96789274	96809943	200	180	96861640	96796255
200	150	315	4	-	110	315S	Siemens, MMG-E	48	80	250	96848933	96789274	96809943	200	180	96861640	96796255
200	150	315	4	-	110	280M	MMG-G, EFF1 & EFF2	48	80	250	96848933	96789274	96809943	200	180	96861640	96796255
200	150	315	4	-	132	315M	Siemens, MMG-E	48	80	250	96848933	96789274	96809943	200	180	96861640	96796255
200	150	315	4	-	132	315S	MMG-G, EFF1 & EFF2	48	85	250	96848934	96789274	96809943	225	180	96861641	96796259
200	150	315	6	11	-	160L	All	48	42	180	96848926	96789247	96809941	110	180	96861630	96480017
200	150	315	6	15	-	180L	All	48	48	200	96848927	96789269	96809942	110	180	96861631	96480017
200	150	315	6	18.5	18.5	200LA	All	48	55	200	96848928	96789269	96809942	125	180	96861632	96480018
200	150	315	6	22	22	200LB	All	48	55	200	96848928	96789269	96809942	125	180	96861632	96480018
200	150	315	6	30	30	225M	All	48	60	224	96848929	96789269	96809942	140	180	96861633	96480019
200	150	315	6	-	37	250M	Siemens, MMG-E	48	65	224	96848930	96789269	96809942	160	180	96861634	96480040
200	150	315	6	-	37	250S	MMG-G, EFF1 & EFF2	48	70	250	96848931	96789274	96809943	180	180	96861636	96796254
200	150	400	4	55	-	250M	Siemens, MMG-E	48	65	224	96848930	96789269	96809942	160	180	96861634	96480040
200	150	400	4	55	-	250S	MMG-G, EFF1 & EFF2	48	70	250	96848931	96789274	96809943	180	180	96861636	96796254
200	150	400	4	75	-	280S	Siemens, MMG-E	48	75	250	96848932	96789274	96809943	180	180	96861638	96796254
200	150	400	4	75	-	250M	MMG-G, EFF1& EFF2	48	70	250	96848931	96789274	96809943	180	180	96861636	96796254
200	150	400	4	90	90	280M	Siemens, MMG-E	48	75	250	96848932	96789274	96809943	180	180	96861638	96796254
200	150	400	4	90	90	280S	MMG-G, EFF1 & EFF2	48	80	250	96848933	96789274	96809943	200	180	96861640	96796255
200	150	400	4	110	110	315S	Siemens, MMG-E	48	80	250	96848933	96789274	96809943	200	180	96861640	96796255
200	150	400	4	110	110	280M	MMG-G, EFF1 & EFF2	48	80	250	96848933	96789274	96809943	200	180	96861640	96796255
200	150	400	4	132	132	315M	Siemens, MMG-E	48	80	250	96848933	96789274	96809943	200	180	96861640	96796255
200	150	400	4	132	132	315S	MMG-G, EFF1 & EFF2	48	85	250	96848934	96789274	96809943	225	180	96861641	96796259
200	150	400	4	160	160	315M	Siemens, MMG-E	48	80	250	96848933	96789274	96809943	200	180	96861640	96796255

Pump type			Motor data					Shaft dia.		Grundfos standard coupling				Grundfos spacer coupling				
			Pole	Power [kW]		Frame size	Make	Pump	Motor	Coupling diameter	Coupling complete	Rubber	Bolts	Coupling diameter	Spacer length	Coupling complete	Rubber	
				50 Hz	60 Hz			[mm]	[mm]	[mm]				[mm]	[mm]			
200	150	400	4	160	160	315M	MMG-G, EFF1 & EFF2	48	85	250	96848934	96789274	96809943	225	180	96861641	96796259	
200	150	400	4	-	200	315L	Siemens, MMG-E	48	80	250	96848933	96789274	96809943	200	180	96861640	96796255	
200	150	400	4	-	200	315M	MMG-G, EFF1 & EFF2	48	85	250	96848934	96789274	96809943	225	180	96861641	96796259	
200	150	400	4	-	250	315C	MMG-G, EFF1	48	95	250	96848935	96789274	96809943	250	180	96861643	96796260	
200	150	400	4	-	250	355M	MMG-G, EFF2	48	95	250	96848935	96789274	96809943	250	180	96861643	96796260	
200	150	400	4	-	250	355M	MMG-E	48	95	250	96848935	96789274	96809943	250	180	96861643	96796260	
200	150	400	4	-	288	315L	Siemens	48	85	250	96848934	96789274	96809943	250	180	96861642	96796260	
200	150	400	6	18.5	-	200LA	All	48	55	200	96848928	96789269	96809942	125	180	96861632	96480018	
200	150	400	6	22	22	200LB	All	48	55	200	96848928	96789269	96809942	125	180	96861632	96480018	
200	150	400	6	30	30	225M	All	48	60	224	96848929	96789269	96809942	140	180	96861633	96480019	
200	150	400	6	37	37	250M	Siemens, MMG-E	48	65	224	96848930	96789269	96809942	160	180	96861634	96480040	
200	150	400	6	37	37	250S	MMG-G, EFF1 & EFF2	48	70	250	96848931	96789274	96809943	180	180	96861636	96796254	
200	150	400	6	45	45	280S	Siemens, MMG-E	48	75	250	96848932	96789274	96809943	180	180	96861638	96796254	
200	150	400	6	45	45	250M	MMG-G, EFF1 & EFF2	48	70	250	96848931	96789274	96809943	180	180	96861636	96796254	
200	150	400	6	-	55	280M	Siemens, MMG-E	48	75	250	96848932	96789274	96809943	180	180	96861638	96796254	
200	150	400	6	-	55	280S	MMG-G, EFF1 & EFF2	48	80	250	96848933	96789274	96809943	200	180	96861640	96796255	
200	150	400	6	-	75	315S	Siemens, MMG-E	48	80	250	96848933	96789274	96809943	200	180	96861640	96796255	
200	150	400	6	-	75	280M	MMG-G, EFF1 & EFF2	48	80	250	96848933	96789274	96809943	200	180	96861640	96796255	
200	150	500	4	132	-	315M	Siemens, MMG-E	60	80	250	96848943	96789274	96809943	200	180	96861653	96796255	
200	150	500	4	132	-	315S	MMG-G, EFF1 & EFF2	60	85	250	96848944	96789274	96809943	225	180	96861654	96796259	
200	150	500	4	160	-	315M	Siemens, MMG-E	60	80	250	96848943	96789274	96809943	200	180	96861653	96796255	
200	150	500	4	160	-	315M	MMG-G, EFF1 & EFF2	60	85	250	96848944	96789274	96809943	225	180	96861654	96796259	
200	150	500	4	200	200	315L	Siemens, MMG-E	60	80	250	96848943	96789274	96809943	200	180	96861653	96796255	
200	150	500	4	200	200	315M	MMG-G, EFF1 & EFF2	60	85	250	96848944	96789274	96809943	225	180	96861654	96796259	
200	150	500	4	250	250	315C	MMG-G, EFF1	60	95	250	96848945	96789274	96809943	225	180	96861656	96796259	
200	150	500	4	250	250	355M	MMG-G, EFF2	60	95	250	96848945	96789274	96809943	225	180	96861656	96796259	
200	150	500	4	250	250	355M	MMG-E	60	95	250	96848945	96789274	96809943	225	180	96861656	96796259	
200	150	500	4	250	288	315L	Siemens	60	85	250	96848944	96789274	96809943	225	180	96861654	96796259	
200	150	500	4	-	315	315D	MMG-G, EFF1	60	95	250	96848945	96789274	96809943	250	180	96861657	96796260	
200	150	500	4	-	315	355L	MMG-G, EFF2	60	95	250	96848945	96789274	96809943	250	180	96861657	96796260	
200	150	500	4	-	315	355L	MMG-E	60	95	250	96848945	96789274	96809943	250	180	96861657	96796260	
200	150	500	4	-	362	315L	Siemens	60	85	250	96848944	96789274	96809943	250	180	96861655	96796260	
200	150	500	6	37	-	250M	Siemens, MMG-E	60	65	224	96848940	96789269	96809942	160	180	96861648	96480040	
200	150	500	6	37	-	250S	MMG-G, EFF1 & EFF2	60	70	250	96848941	96789274	96809943	180	180	96861650	96796254	
200	150	500	6	45	-	280S	Siemens, MMG-E	60	75	250	96848942	96789274	96809943	180	180	96861651	96796254	
200	150	500	6	45	-	250M	MMG-G, EFF1 & EFF2	60	70	250	96848941	96789274	96809943	180	180	96861650	96796254	

Pump type			Motor data					Shaft dia.		Grundfos standard coupling				Grundfos spacer coupling			
			Pole	Power [kW]		Frame size	Make	Pump	Motor	Coupling diameter	Coupling complete	Rubber	Bolts	Coupling diameter	Spacer length	Coupling complete	Rubber
				50 Hz	60 Hz			[mm]	[mm]	[mm]				[mm]	[mm]		
200	150	500	6	55	55	280M	Siemens, MMG-E	60	75	250	96848942	96789274	96809943	180	180	96861651	96796254
200	150	500	6	55	55	280S	MMG-G, EFF1 & EFF2	60	80	250	96848943	96789274	96809943	200	180	96861653	96796255
200	150	500	6	75	75	315S	Siemens, MMG-E	60	80	250	96848943	96789274	96809943	200	180	96861653	96796255
200	150	500	6	75	75	280M	MMG-G, EFF1 & EFF2	60	80	250	96848943	96789274	96809943	200	180	96861653	96796255
200	150	500	6	-	90	315M	Siemens, MMG-E	60	80	250	96848943	96789274	96809943	200	180	96861653	96796255
200	150	500	6	-	90	315S	MMG-G, EFF1 & EFF2	60	85	250	96848944	96789274	96809943	225	180	96861654	96796259
200	150	500	6	-	110	315M	Siemens	60	80	250	96848943	96789274	96809943	200	180	96861653	96796255
200	150	500	6	-	110	315L	MMG-E	60	80	250	96848943	96789274	96809943	200	180	96861653	96796255
200	150	500	6	-	110	315M	MMG-G, EFF1 & EFF2	60	85	250	96848944	96789274	96809943	225	180	96861654	96796259
200	150	500	6	-	132	315L	Siemens, MMG-E	60	80	250	96848943	96789274	96809943	200	180	96861653	96796255
200	150	500	6	-	132	315M	MMG-G, EFF1 & EFF2	60	85	250	96848944	96789274	96809943	225	180	96861654	96796259
250	200	400	4	37	-	225S	All	48	60	224	96848929	96789269	96809942	140	180	96861633	96480019
250	200	400	4	45	-	225M	All	48	60	224	96848929	96789269	96809942	140	180	96861633	96480019
250	200	400	4	55	55	250M	Siemens, MMG-E	48	65	224	96848930	96789269	96809942	160	180	96861634	96480040
250	200	400	4	55	55	250SC	MMG-G, EFF1 & EFF2	48	70	250	96848931	96789274	96809943	180	180	96861636	96796254
250	200	400	4	75	75	280S	Siemens, MMG-E	48	75	250	96848932	96789274	96809943	180	180	96861638	96796254
250	200	400	4	75	75	250MC	MMG-G, EFF1 & EFF2	48	70	250	96848931	96789274	96809943	180	180	96861636	96796254
250	200	400	4	90	90	280M	Siemens, MMG-E	48	75	250	96848932	96789274	96809943	180	180	96861638	96796254
250	200	400	4	90	90	280S	MMG-G, EFF1 & EFF2	48	80	250	96848933	96789274	96809943	200	180	96861640	96796255
250	200	400	4	110	110	315S	Siemens, MMG-E	48	80	250	96848933	96789274	96809943	200	180	96861640	96796255
250	200	400	4	110	110	280M	MMG-G, EFF1 & EFF2	48	80	250	96848933	96789274	96809943	200	180	96861640	96796255
250	200	400	4	132	132	315M	Siemens, MMG-E	48	80	250	96848933	96789274	96809943	200	180	96861640	96796255
250	200	400	4	132	132	315S	MMG-G, EFF1 & EFF2	48	85	250	96848934	96789274	96809943	225	180	96861641	96796259
250	200	400	4	-	160	315M	Siemens, MMG-E	48	80	250	96848933	96789274	96809943	200	180	96861640	96796255
250	200	400	4	-	160	315M	MMG-G, EFF1 & EFF2	48	85	250	96848934	96789274	96809943	225	180	96861641	96796259
250	200	400	4	-	200	315L	Siemens, MMG-E	48	80	250	96848933	96789274	96809943	200	180	96861640	96796255
250	200	400	4	-	200	315M	MMG-G, EFF1 & EFF2	48	85	250	96848934	96789274	96809943	225	180	96861641	96796259
250	200	400	6	15	-	180L	All	48	48	200	96848927	96789269	96809942	110	180	96861631	96480017
250	200	400	6	18.5	-	200L	All	48	55	200	96848928	96789269	96809942	125	180	96861632	96480018
250	200	400	6	22	22	200L	All	48	55	200	96848928	96789269	96809942	125	180	96861632	96480018
250	200	400	6	30	30	225M	All	48	60	224	96848929	96789269	96809942	140	180	96861633	96480019
250	200	400	6	37	37	250M	Siemens, MMG-E	48	65	224	96848930	96789269	96809942	160	180	96861634	96480040
250	200	400	6	37	37	250S	MMG-G, EFF1 & EFF2	48	70	250	96848931	96789274	96809943	180	180	96861636	96796254
250	200	400	6	-	45	280S	Siemens, MMG-E	48	75	250	96848932	96789274	96809943	180	180	96861638	96796254

Pump type			Motor data					Shaft dia.		Grundfos standard coupling				Grundfos spacer coupling				
			Pole	Power [kW]		Frame size	Make	Pump	Motor	Coupling diameter	Coupling complete	Rubber	Bolts	Coupling diameter	Spacer length	Coupling complete	Rubber	
				50 Hz	60 Hz			[mm]	[mm]	[mm]				[mm]	[mm]			
250	200	400	6	-	45	250M	MMG-G, EFF1 & EFF2	48	70	250	96848931	96789274	96809943	180	180	96861636	96796254	
250	200	400	6	-	55	280M	Siemens, MMG-E	48	75	250	96848932	96789274	96809943	180	180	96861638	96796254	
250	200	400	6	-	55	280S	MMG-G, EFF1 & EFF2	48	80	250	96848933	96789274	96809943	200	180	96861640	96796255	
250	200	450	4	75	75	280S	Siemens, MMG-E	48	75	250	96848932	96789274	96809943	180	180	96861638	96796254	
250	200	450	4	75	75	250MC	MMG-G, EFF1 & EFF2	48	70	250	96848931	96789274	96809943	180	180	96861636	96796254	
250	200	450	4	90	90	280M	Siemens, MMG-E	48	75	250	96848932	96789274	96809943	180	180	96861638	96796254	
250	200	450	4	90	90	280S	MMG-G, EFF1 & EFF2	48	80	250	96848933	96789274	96809943	200	180	96861640	96796255	
250	200	450	4	110	110	315S	Siemens, MMG-E	48	80	250	96848933	96789274	96809943	200	180	96861640	96796255	
250	200	450	4	110	110	280M	MMG-G, EFF1 & EFF2	48	80	250	96848933	96789274	96809943	200	180	96861640	96796255	
250	200	450	4	132	132	315M	Siemens, MMG-E	48	80	250	96848933	96789274	96809943	200	180	96861640	96796255	
250	200	450	4	132	132	315S	MMG-G, EFF1 & EFF2	48	85	250	96848934	96789274	96809943	225	180	96861641	96796259	
250	200	450	4	160	160	315M	Siemens, MMG-E	48	80	250	96848933	96789274	96809943	200	180	96861640	96796255	
250	200	450	4	160	160	315M	MMG-G, EFF1 & EFF2	48	85	250	96848934	96789274	96809943	225	180	96861641	96796259	
250	200	450	4	-	200	315L	Siemens, MMG-E	48	80	250	96848933	96789274	96809943	200	180	96861640	96796255	
250	200	450	4	-	200	315M	MMG-G, EFF1 & EFF2	48	85	250	96848934	96789274	96809943	225	180	96861641	96796259	
250	200	450	4	-	288	315L	Siemens	48	85	250	96848934	96789274	96809943	225	180	96861641	96796259	
250	200	450	4	-	250	355M	MMG-E	48	95	250	96848935	96789274	96809943	250	180	96861643	96796260	
250	200	450	4	-	250	315C	MMG-G, EFF1	48	95	250	96848935	96789274	96809943	250	180	96861643	96796260	
250	200	450	4	-	250	355M	MMG-G, EFF2	48	95	250	96848935	96789274	96809943	250	180	96861643	96796260	
250	200	450	6	18.5	-	200L	All	48	55	200	96848928	96789269	96809942	125	180	96861632	96480018	
250	200	450	6	22	-	200L	All	48	55	200	96848928	96789269	96809942	125	180	96861632	96480018	
250	200	450	6	30	-	225M	All	48	60	224	96848929	96789269	96809942	140	180	96861633	96480019	
250	200	450	6	37	37	250M	Siemens, MMG-E	48	65	224	96848930	96789269	96809942	160	180	96861634	96480040	
250	200	450	6	37	37	250S	MMG-G, EFF1 & EFF2	48	70	250	96848931	96789274	96809943	180	180	96861636	96796254	
250	200	450	6	45	45	280S	Siemens, MMG-E	48	75	250	96848932	96789274	96809943	180	180	96861638	96796254	
250	200	450	6	45	45	250M	MMG-G, EFF1 & EFF2	48	70	250	96848931	96789274	96809943	180	180	96861636	96796254	
250	200	450	6	-	55	280M	Siemens, MMG-E	48	75	250	96848932	96789274	96809943	180	180	96861638	96796254	
250	200	450	6	-	55	280S	MMG-G, EFF1 & EFF2	48	80	250	96848933	96789274	96809943	200	180	96861640	96796255	
250	200	450	6	-	75	315S	Siemens, MMG-E	48	80	250	96848933	96789274	96809943	200	180	96861640	96796255	
250	200	450	6	-	75	280M	MMG-G, EFF1 & EFF2	48	80	250	96848933	96789274	96809943	200	180	96861640	96796255	
250	200	450	6	-	90	315M	Siemens, MMG-E	48	80	250	96848933	96789274	96809943	200	180	96861640	96796255	
250	200	450	6	-	90	315S	MMG-G, EFF1 & EFF2	48	85	250	96848934	96789274	96809943	225	180	96861641	96796259	
300	250	350	4	37	-	225S	All	48	60	224	96848929	96789269	96809942	140	180	96861633	96480019	
300	250	350	4	45	-	225M	All	48	60	224	96848929	96789269	96809942	140	180	96861633	96480019	

Pump type			Motor data					Shaft dia.		Grundfos standard coupling				Grundfos spacer coupling			
			Pole	Power [kW]		Frame size	Make	Pump	Motor	Coupling diameter	Coupling complete	Rubber	Bolts	Coupling diameter	Spacer length	Coupling complete	Rubber
				50 Hz	60 Hz			[mm]	[mm]	[mm]				[mm]	[mm]		
300	250	350	4	55	-	250M	Siemens, MMG-E	48	65	224	*96848930*	*96789269*	*96809942*	160	180	*96861634*	*96480040*
300	250	350	4	55	-	250SC	MMG-G, EFF1 & EFF2	48	70	250	*96848931*	*96789274*	*96809943*	180	180	*96861636*	*96796254*
300	250	350	4	75	75	280S	Siemens, MMG-E	48	75	250	*96848932*	*96789274*	*96809943*	180	180	*96861638*	*96796254*
300	250	350	4	75	75	250MC	MMG-G, EFF1 & EFF2	48	70	250	*96848931*	*96789274*	*96809943*	180	180	*96861636*	*96796254*
300	250	350	4	90	90	280M	Siemens, MMG-E	48	75	250	*96848932*	*96789274*	*96809943*	180	180	*96861638*	*96796254*
300	250	350	4	90	90	280S	MMG-G, EFF1 & EFF2	48	80	250	*96848933*	*96789274*	*96809943*	200	180	*96861640*	*96796255*
300	250	350	4	-	110	315S	Siemens, MMG-E	48	80	250	*96848933*	*96789274*	*96809943*	200	180	*96861640*	*96796255*
300	250	350	4	-	110	280M	MMG-G, EFF1 & EFF2	48	80	250	*96848933*	*96789274*	*96809943*	200	180	*96861640*	*96796255*
300	250	350	4	-	132	315M	Siemens, MMG-E	48	80	250	*96848933*	*96789274*	*96809943*	200	180	*96861640*	*96796255*
300	250	350	4	-	132	315S	MMG-G, EFF1 & EFF2	48	85	250	*96848934*	*96789274*	*96809943*	225	180	*96861641*	*96796259*
300	250	350	6	11	-	160L	All	48	42	0	*0*	*0*	*0*	0	180	*0*	*0*
300	250	350	6	15	-	180L	All	48	48	200	*96848927*	*96789269*	*96809942*	110	180	*96861631*	*96480017*
300	250	350	6	18.5	-	200L	All	48	55	200	*96848928*	*96789269*	*96809942*	125	180	*96861632*	*96480018*
300	250	350	6	22	22	200L	All	48	55	200	*96848928*	*96789269*	*96809942*	125	180	*96861632*	*96480018*
300	250	350	6	-	30	225M	All	48	60	224	*96848929*	*96789269*	*96809942*	140	180	*96861633*	*96480019*
300	250	350	6	-	37	250M	Siemens, MMG-E	48	65	224	*96848930*	*96789269*	*96809942*	160	180	*96861634*	*96480040*
300	250	350	6	-	37	250S	MMG-G, EFF1 & EFF2	48	70	250	*96848931*	*96789274*	*96809943*	180	180	*96861636*	*96796254*
300	250	350	6	-	45	280S	Siemens, MMG-E	48	75	250	*96848932*	*96789274*	*96809943*	180	180	*96861638*	*96796254*
300	250	350	6	-	45	250M	MMG-G, EFF1 & EFF2	48	70	250	*96848931*	*96789274*	*96809943*	180	180	*96861636*	*96796254*
300	250	400	4	45	-	225M	All	48	60	224	*96848929*	*96789269*	*96809942*	140	180	*96861633*	*96480019*
300	250	400	4	55	-	250M	Siemens, MMG-E	48	65	224	*96848930*	*96789269*	*96809942*	160	180	*96861634*	*96480040*
300	250	400	4	55	-	250SC	MMG-G, EFF1 & EFF2	48	70	250	*96848931*	*96789274*	*96809943*	180	180	*96861636*	*96796254*
300	250	400	4	75	75	280S	Siemens, MMG-E	48	75	250	*96848932*	*96789274*	*96809943*	180	180	*96861638*	*96796254*
300	250	400	4	75	75	250MC	MMG-G, EFF1 & EFF2	48	70	250	*96848931*	*96789274*	*96809943*	180	180	*96861636*	*96796254*
300	250	400	4	90	90	280M	Siemens, MMG-E	48	75	250	*96848932*	*96789274*	*96809943*	180	180	*96861638*	*96796254*
300	250	400	4	90	90	280S	MMG-G, EFF1 & EFF2	48	80	250	*96848933*	*96789274*	*96809943*	200	180	*96861640*	*96796255*
300	250	400	4	110	110	315S	Siemens, MMG-E	48	80	250	*96848933*	*96789274*	*96809943*	200	180	*96861640*	*96796255*
300	250	400	4	110	110	280M	MMG-G, EFF1 & EFF2	48	80	250	*96848933*	*96789274*	*96809943*	200	180	*96861640*	*96796255*
300	250	400	4	132	132	315M	Siemens, MMG-E	48	80	250	*96848933*	*96789274*	*96809943*	200	180	*96861640*	*96796255*
300	250	400	4	132	132	315S	MMG-G, EFF1 & EFF2	48	85	250	*96848934*	*96789274*	*96809943*	225	180	*96861641*	*96796259*
300	250	400	4	160	160	315M	Siemens, MMG-E	48	80	250	*96848933*	*96789274*	*96809943*	200	180	*96861640*	*96796255*
300	250	400	4	160	160	315M	MMG-G, EFF1 & EFF2	48	85	250	*96848934*	*96789274*	*96809943*	225	180	*96861641*	*96796259*
300	250	400	4	-	200	315L	Siemens, MMG-E	48	80	250	*96848933*	*96789274*	*96809943*	200	180	*96861640*	*96796255*

Pump type			Motor data					Shaft dia.		Grundfos standard coupling				Grundfos spacer coupling				
			Pole	Power [kW]		Frame size	Make	Pump	Motor	Coupling diameter	Coupling complete	Rubber	Bolts	Coupling diameter	Spacer length	Coupling complete	Rubber	
				50 Hz	60 Hz			[mm]	[mm]	[mm]				[mm]	[mm]			
300	250	400	4	-	200	315M	MMG-G, EFF1 & EFF2	48	85	250	96848934	96789274	96809943	225	180	96861641	96796259	
300	250	400	4	-	288	315L	Siemens	48	85	250	96848934	96789274	96809943	225	180	96861641	96796259	
300	250	400	4	-	250	355M	MMG-E	48	95	250	96848935	96789274	96809943	250	180	96861643	96796260	
300	250	400	4	-	250	315C	MMG-G, EFF1	48	95	250	96848935	96789274	96809943	250	180	96861643	96796260	
300	250	400	4	-	250	355M	MMG-G, EFF2	48	95	250	96848935	96789274	96809943	250	180	96861643	96796260	
300	250	400	6	15	-	180L	All	48	48	200	96848927	96789269	96809942	110	180	96861631	96480017	
300	250	400	6	18.5	-	200L	All	48	55	200	96848928	96789269	96809942	125	180	96861632	96480018	
300	250	400	6	22	-	200L	All	48	55	200	96848928	96789269	96809942	125	180	96861632	96480018	
300	250	400	6	30	-	225M	All	48	60	224	96848929	96789269	96809942	140	180	96861633	96480019	
300	250	400	6	37	37	250M	Siemens, MMG-E	48	65	224	96848930	96789269	96809942	160	180	96861634	96480040	
300	250	400	6	37	37	250S	MMG-G, EFF1 & EFF2	48	70	250	96848931	96789274	96809943	180	180	96861636	96796254	
300	250	400	6	45	45	280S	Siemens, MMG-E	48	75	250	96848932	96789274	96809943	180	180	96861638	96796254	
300	250	400	6	45	45	250M	MMG-G, EFF1 & EFF2	48	70	250	96848931	96789274	96809943	180	180	96861636	96796254	
300	250	400	6	-	55	280M	Siemens, MMG-E	48	75	250	96848932	96789274	96809943	180	180	96861638	96796254	
300	250	400	6	-	55	280S	MMG-G, EFF1 & EFF2	48	80	250	96848933	96789274	96809943	200	180	96861640	96796255	
300	250	400	6	-	75	315S	Siemens, MMG-E	48	80	250	96848933	96789274	96809943	200	180	96861640	96796255	
300	250	400	6	-	75	280M	MMG-G, EFF1 & EFF2	48	80	250	96848933	96789274	96809943	200	180	96861640	96796255	
300	250	400	6	-	90	315M	Siemens, MMG-E	48	80	250	96848933	96789274	96809943	200	180	96861640	96796255	
300	250	400	6	-	90	315S	MMG-G, EFF1 & EFF2	48	85	250	96848934	96789274	96809943	225	180	96861641	96796259	
300	250	450	4	75	-	280S	Siemens, MMG-E	60	75	250	96848942	96789274	96809943	180	180	96861651	96796254	
300	250	450	4	75	-	250M	MMG-G, EFF1 & EFF2	60	70	250	96848941	96789274	96809943	180	180	96861650	96796254	
300	250	450	4	90	-	280M	Siemens, MMG-E	60	75	250	96848942	96789274	96809943	180	180	96861651	96796254	
300	250	450	4	90	-	280S	MMG-G, EFF1 & EFF2	60	80	250	96848943	96789274	96809943	200	180	96861653	96796255	
300	250	450	4	110	110	315S	Siemens, MMG-E	60	80	250	96848943	96789274	96809943	200	180	96861653	96796255	
300	250	450	4	110	110	280M	MMG-G, EFF1 & EFF2	60	80	250	96848943	96789274	96809943	200	180	96861653	96796255	
300	250	450	4	132	132	315M	Siemens, MMG-E	60	80	250	96848943	96789274	96809943	200	180	96861653	96796255	
300	250	450	4	132	132	315S	MMG-G, EFF1 & EFF2	60	85	250	96848944	96789274	96809943	225	180	96861654	96796259	
300	250	450	4	160	160	315M	Siemens, MMG-E	60	80	250	96848943	96789274	96809943	200	180	96861653	96796255	
300	250	450	4	160	160	315M	MMG-G, EFF1 & EFF2	60	85	250	96848944	96789274	96809943	225	180	96861654	96796259	
300	250	450	4	200	200	315L	Siemens, MMG-E	60	80	250	96848943	96789274	96809943	200	180	96861653	96796255	
300	250	450	4	200	200	315M	MMG-G, EFF1 & EFF2	60	85	250	96848944	96789274	96809943	225	180	96861654	96796259	
300	250	450	4	-	288	315L	Siemens	60	85	250	96848944	96789274	96809943	225	180	96861654	96796259	
300	250	450	4	-	250	355M	MMG-E	60	95	250	96848945	96789274	96809943	250	180	96861657	96796260	
300	250	450	4	-	250	315C	MMG-G, EFF1	60	95	250	96848945	96789274	96809943	250	180	96861657	96796260	
300	250	450	4	-	250	355M	MMG-G, EFF2	60	95	250	96848945	96789274	96809943	250	180	96861657	96796260	
300	250	450	4	-	362	315L	Siemens	60	85	250	96848944	96789274	96809943	225	180	96861654	96796259	

Pump type			Motor data					Shaft dia.		Grundfos standard coupling				Grundfos spacer coupling			
			Pole	Power [kW]		Frame size	Make	Pump	Motor	Coupling diameter	Coupling complete	Rubber	Bolts	Coupling diameter	Spacer length	Coupling complete	Rubber
				50 Hz	60 Hz			[mm]	[mm]	[mm]				[mm]	[mm]		
300	250	450	4	-	315	355L	MMG-E	60	95	250	96848945	96789274	96809943	250	180	96861657	96796260
300	250	450	4	-	315	315D	MMG-G, EFF1	60	95	250	96848945	96789274	96809943	250	180	96861657	96796260
300	250	450	4	-	315	355L	MMG-G, EFF2	60	95	250	96848945	96789274	96809943	250	180	96861657	96796260
300	250	450	6	18.5	-	200L	All	60	55	200	96848938	96789269	96809942	140	180	96861646	96480019
300	250	450	6	22	-	200L	All	60	55	200	96848938	96789269	96809942	140	180	96861646	96480019
300	250	450	6	30	-	225M	All	60	60	224	96848939	96789269	96809942	140	180	96861647	96480019
300	250	450	6	37	37	250M	Siemens, MMG-E	60	65	224	96848940	96789269	96809942	160	180	96861648	96480040
300	250	450	6	37	37	250S	MMG-G, EFF1 & EFF2	60	70	250	96848941	96789274	96809943	180	180	96861650	96796254
300	250	450	6	45	45	280S	Siemens, MMG-E	60	75	250	96848942	96789274	96809943	180	180	96861651	96796254
300	250	450	6	45	45	250M	MMG-G, EFF1 & EFF2	60	70	250	96848941	96789274	96809943	180	180	96861650	96796254
300	250	450	6	55	55	280M	Siemens, MMG-E	60	75	250	96848942	96789274	96809943	180	180	96861651	96796254
300	250	450	6	55	55	280S	MMG-G, EFF1 & EFF2	60	80	250	96848943	96789274	96809943	200	180	96861653	96796255
300	250	450	6	-	75	315S	Siemens, MMG-E	60	80	250	96848943	96789274	96809943	200	180	96861653	96796255
300	250	450	6	-	75	280M	MMG-G, EFF1 & EFF2	60	80	250	96848943	96789274	96809943	200	180	96861653	96796255
300	250	450	6	-	90	315M	Siemens, MMG-E	60	80	250	96848943	96789274	96809943	200	180	96861653	96796255
300	250	450	6	-	90	315S	MMG-G, EFF1 & EFF2	60	85	250	96848944	96789274	96809943	225	180	96861654	96796259
300	250	450	6	-	110	315M	Siemens	60	80	250	96848943	96789274	96809943	200	180	96861653	96796255
300	250	450	6	-	110	315L	MMG-E	60	80	250	96848943	96789274	96809943	200	180	96861653	96796255
300	250	450	6	-	110	315M	MMG-G, EFF1 & EFF2	60	85	250	96848944	96789274	96809943	225	180	96861654	96796259
300	250	500	4	160	-	315M	Siemens, MMG-E	60	80	250	96848943	96789274	96809943	200	180	96861653	96796255
300	250	500	4	160	-	315M	MMG-G, EFF1 & EFF2	60	85	250	96848944	96789274	96809943	225	180	96861654	96796259
300	250	500	4	200	-	315L	Siemens, MMG-E	60	80	250	96848943	96789274	96809943	200	180	96861653	96796255
300	250	500	4	200	-	315M	MMG-G, EFF1 & EFF2	60	85	250	96848944	96789274	96809943	225	180	96861654	96796259
300	250	500	4	250	-	315L	Siemens	60	85	250	96848944	96789274	96809943	225	180	96861654	96796259
300	250	500	4	250	-	355M	MMG-E	60	95	250	96848945	96789274	96809943	250	180	96861657	96796260
300	250	500	4	250	-	315C	MMG-G, EFF1	60	95	250	96848945	96789274	96809943	250	180	96861657	96796260
300	250	500	4	250	-	355M	MMG-G, EFF2	60	95	250	96848945	96789274	96809943	250	180	96861657	96796260
300	250	500	4	315	-	315L	Siemens	60	85	250	96848944	96789274	96809943	225	180	96861654	96796259
300	250	500	4	315	-	355L	MMG-E	60	95	250	96848945	96789274	96809943	250	180	96861657	96796260
300	250	500	4	315	-	315D	MMG-G, EFF1	60	95	250	96848945	96789274	96809943	250	180	96861657	96796260
300	250	500	4	315	-	355L	MMG-G, EFF2	60	95	250	96848945	96789274	96809943	250	180	96861657	96796260
300	250	500	6	45	-	280S	Siemens, MMG-E	60	75	250	96848942	96789274	96809943	180	180	96861651	96796254
300	250	500	6	45	-	250M	MMG-G, EFF1 & EFF2	60	70	250	96848941	96789274	96809943	180	180	96861650	96796254
300	250	500	6	55	-	280M	Siemens, MMG-E	60	75	250	96848942	96789274	96809943	180	180	96861651	96796254
300	250	500	6	55	-	280S	MMG-G, EFF1 & EFF2	60	80	250	96848943	96789274	96809943	200	180	96861653	96796255
300	250	500	6	75	75	315S	Siemens, MMG-E	60	80	250	96848943	96789274	96809943	200	180	96861653	96796255
300	250	500	6	75	75	280M	MMG-G, EFF1 & EFF2	60	80	250	96848943	96789274	96809943	200	180	96861653	96796255

Pump type			Motor data					Shaft dia.		Grundfos standard coupling				Grundfos spacer coupling			
			Pole	Power [kW]		Frame size	Make	Pump	Motor	Coupling diameter	Coupling complete	Rubber	Bolts	Coupling diameter	Spacer length	Coupling complete	Rubber
				50 Hz	60 Hz			[mm]	[mm]	[mm]				[mm]	[mm]		
300	250	500	6	90	90	315M	Siemens, MMG-E	60	80	250	*96848943*	*96789274*	*96809943*	200	180	*96861653*	*96796255*
300	250	500	6	90	90	315S	MMG-G, EFF1 & EFF2	60	85	250	*96848943*	*96789274*	*96809943*	200	180	*96861653*	*96796255*
300	250	500	6	-	110	315M	Siemens	60	80	250	*96848943*	*96789274*	*96809943*	200	180	*96861653*	*96796255*
300	250	500	6	-	110	315L	MMG-E	60	80	250	*96848943*	*96789274*	*96809943*	200	180	*96861653*	*96796255*
300	250	500	6	-	110	315M	MMG-G, EFF1 & EFF2	60	85	250	*96848944*	*96789274*	*96809943*	225	180	*96861654*	*96796259*
300	250	500	6	-	132	315L	Siemens, MMG-E	60	80	250	*96848943*	*96789274*	*96809943*	200	180	*96861653*	*96796255*
300	250	500	6	-	132	315M	MMG-G, EFF1 & EFF2	60	85	250	*96848944*	*96789274*	*96809943*	225	180	*96861654*	*96796259*
300	250	500	6	-	160	315L	Siemens	60	80	250	*96848943*	*96789274*	*96809943*	200	180	*96861653*	*96796255*
300	250	500	6	-	160	355M	MMG-E	60	95	250	*96848945*	*96789274*	*96809943*	250	180	*96861657*	*96796260*
300	250	500	6	-	160	315C	MMG-G, EFF1	60	95	250	*96848945*	*96789274*	*96809943*	250	180	*96861657*	*96796260*

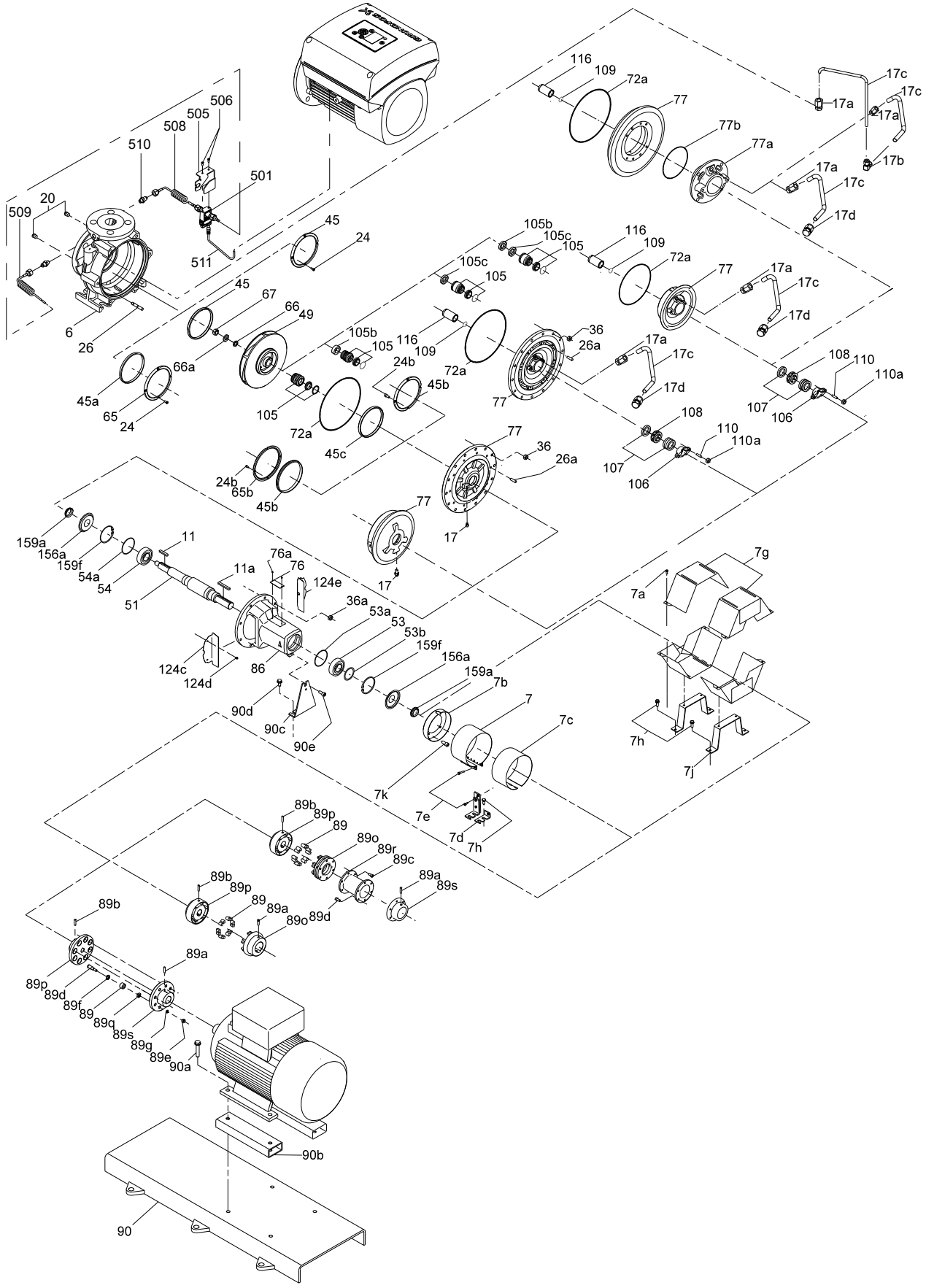

TM034895

Exploded view

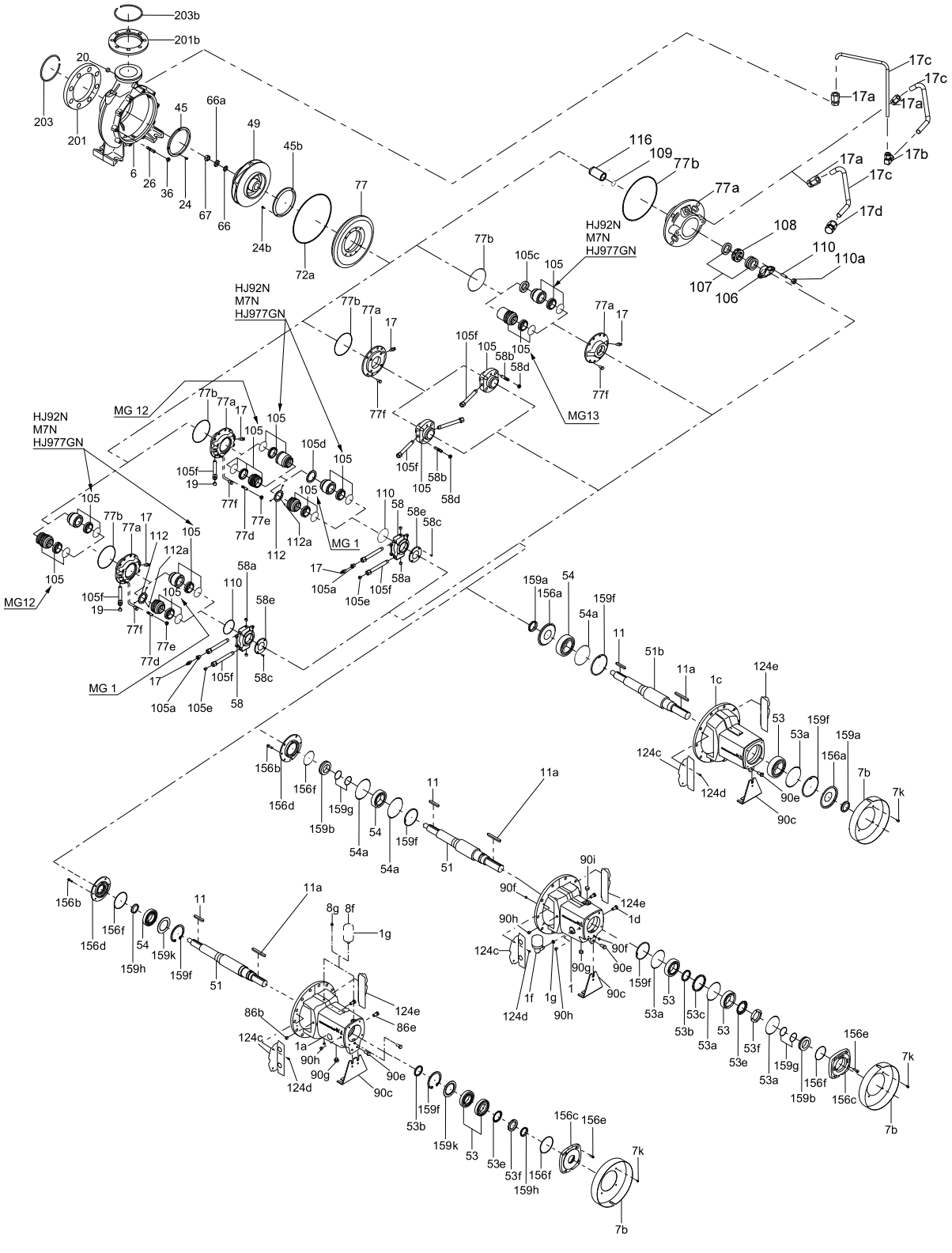

TM049572

Exploded view, NKG single and double mechanical seal, stuffing box, oil-lubricated and grease-lubricated bearing bracket

62. NKX

50/60 Hz

Bearings, spacer ring and V-ring

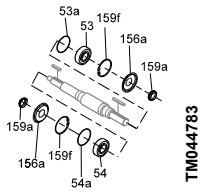

TM044783

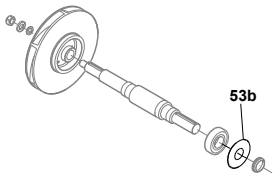

TM044784

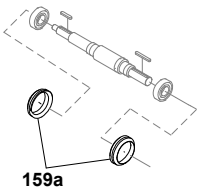

TM044785

Content of bearing kit:

53/54:2 x bearing
53a/54a:2 x O-ring
156a:2 x bearing cover
159f:2 x retaining ring
159a:2 x V-ring

Content of spacer ring kit:

53b:1 x spacer ring

Content of V-ring kit:

159a:2 x V-ring

Pump type		Pump shaft diameter d5	Bearings	Spacer ring [1]	V-ring
65 -	315	32	*96579599*	*96938909*	*96591314*
80 -	200	32	*96579599*	*96938909*	*96591314*
	250	32	*96579599*	*96938909*	*96591314*
	315	32	*96579599*	*96938909*	*96591314*
	400	42	*95919874*	*96938910*	*96871239*
100 -	200	32	*96579599*	*96938909*	*96591314*
	250	32	*96579599*	*96938909*	*96591314*
	315	32	*96579599*	*96938909*	*96591314*
125 -	250	32	*96579599*	*96938909*	*96591314*
	315	42	*95919874*	*96938910*	*96871239*
	400	42	*95919874*	*96938910*	*96871239*
150 -	200	32	*96579599*	*96938909*	*96591314*
	250	42	*95919874*	*96938910*	*96871239*
	315	42	*95919874*	*96938910*	*96871239*
	400	42	*95919874*	*96938910*	*96871239*

1) Only to be used together with GQQE shaft seals.

Nut, washer and key for impeller

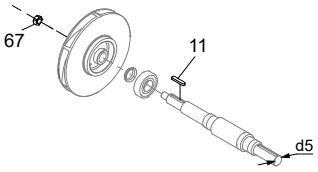

TM044782

11 1 x key
67:1 x nut
66a:1 x lock washer
66:1 x washer

Pump type		Pump shaft diameter d5	
65 -	315	32	*96939130*
80 -	200	32	*96939130*
	250	32	*96939130*
	315	32	*96939130*
	400	42	*96939132*
100 -	200	32	*96939134*
	250	32	*96939134*
	315	32	*96939134*
	400	42	*96939132*
125 -	250	32	*96939134*
	315	42	*96939132*
	400	42	*96939132*
150 -	250	42	*96939132*
	315	42	*96939132*
	400	42	*96939132*

Shaft seal

Pos.	Description	
105	Shaft seal	1
72a	O-ring	1

Pump type		Shaft diam-eter	BAQE	BQQE	GQQE
65 -	315	38	*96537605*	*96537607*	*96537606*
80 -	200	38	*96537605*	*96537607*	*96537606*
	250	38	*96537605*	*96537607*	*96537606*
	315	38	*96537605*	*96537607*	*96537606*
	400	48	*96306472*	*96306473*	*96306474*
100 -	200	38	*96537605*	*96537607*	*96537606*
	250	38	*96537605*	*96537607*	*96537606*
	315	38	*96537605*	*96537607*	*96537606*
	400	48	*96306472*	*96306473*	*96306474*
125 -	250	38	*96537605*	*96537607*	*96537606*
	315	48	*96306472*	*96306473*	*96306474*
	400	48	*96306472*	*96306473*	*96306474*
150 -	250	48	*96306472*	*96306473*	*96306474*
	315	48	*96306472*	*96306473*	*96306474*
	400	48	*96306472*	*96306473*	*96306474*

Coupling and coupling rubber

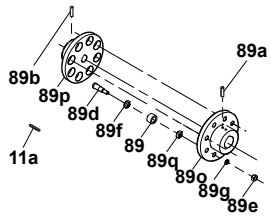

TM044767

Grundfos standard coupling

Content of kit:

Coupling complete	Rubber	Bolts
89o:1 x male part 89p:1 x female part 89d:1 set of bolts/rubber parts 89a:1 x hexagon screw 89b:1 x hexagon screw 11a:1 x key	89:1 set of rubber parts	89d:1 set of bolts 89f:1 x washer 89q:1 x washer 89g:1 x lock washer 89e:1 x nut 89:1 x rubber parts

Pump type	Motor data					Shaft diameter		Grundfos standard coupling			
	Pole	Power [kW]		Frame size	Make	Pump	Motor	Coupling diameter	Kit No, coupling complete	Kit No, rubber	Kit No, bolts
		50 Hz	60 Hz			[mm]	[mm]	[mm]			
65 - 315	4	-	11	160M	All	32	42	180	96848906	96789247	96809941
	4	-	15	160L	All	32	42	180	96848906	96789247	96809941
	4	-	18.5	180M	All	32	48	200	96848907	96789269	96809942
	4	-	22	180L	All	32	48	200	96848907	96789269	96809942
80 - 200	4	-	11	160M	All	32	42	180	96848906	96789247	96809941
80 - 250	4	7.5	7.5	132M	All	32	38	160	96848905	96789247	96809941
	4	11	11	160M	All	32	42	180	96848906	96789247	96809941
	4	-	15	160L	All	32	42	180	96848906	96789247	96809941
	4	-	18.5	180M	All	32	48	200	96848907	96789269	96809942
80 - 315	4	11	-	160M	All	32	42	180	96848906	96789247	96809941
	4	15	-	160L	All	32	42	180	96848906	96789247	96809941
	4	18.5	18.5	180M	All	32	48	200	96848907	96789269	96809942
	4	22	22	180L	All	32	48	200	96848907	96789269	96809942
	4	-	30	200L	All	32	55	200	96848908	96789269	96809942
	4	-	37	225S	All	32	60	224	96848909	96789269	96809942
	4	-	45	225M	All	32	60	224	96848909	96789269	96809942
80 - 400	4	18.5	-	180M	All	42	48	200	96848916	96789269	96809942
	4	22	-	180L	All	42	48	200	96848916	96789269	96809942
	4	30	-	200L	All	42	55	200	96848917	96789269	96809942
100 - 200	4	-	15	160L	All	32	42	180	96848906	96789247	96809941
	4	-	18.5	180M	All	32	48	200	96848907	96789269	96809942
100 - 250	4	7.5	-	132M	All	32	38	160	96848905	96789247	96809941
	4	11	-	160M	All	32	42	180	96848906	96789247	96809941
	4	15	-	160L	All	32	42	180	96848906	96789247	96809941
	4	18.5	18.5	180M	All	32	48	200	96848907	96789269	96809942
	4	-	22	180L	All	32	48	200	96848907	96789269	96809942
	4	-	30	200L	All	32	55	200	96848908	96789269	96809942
100 - 315	4	15	-	160L	All	32	42	180	96848906	96789247	96809941
	4	18.5	-	180M	All	32	48	200	96848907	96789269	96809942
	4	22	22	180L	All	32	48	200	96848907	96789269	96809942
	4	30	30	200L	All	32	55	200	96848908	96789269	96809942
	4	-	37	225S	All	32	60	224	96848909	96789269	96809942
	4	-	45	225M	All	32	60	224	96848909	96789269	96809942

Pump type	Motor data					Shaft diameter		Grundfos standard coupling			
	Pole	Power [kW]		Frame size	Make	Pump	Motor	Coupling diameter	Kit No, coupling complete	Kit No, rubber	Kit No, bolts
		50 Hz	60 Hz			[mm]	[mm]	[mm]			
100 - 400	4	22	-	180L	All	42	48	200	*96848916*	*96789269*	*96809942*
	4	30	-	200L	All	42	55	200	*96848917*	*96789269*	*96809942*
	4	37	-	225S	All	42	60	224	*96848918*	*96789269*	*96809942*
125 - 250	4	-	22	180L	MMG-AC, EFF2	32	48	200	*96848907*	*96789269*	*96809942*
	4	-	30	200L	MMG-AC, EFF2	32	55	200	*96848908*	*96789269*	*96809942*
	4	-	37	225S	MMG-AC, EFF2	32	60	224	*96848909*	*96789269*	*96809942*
	4	-	45	225M	MMG-AC, EFF2	32	60	224	*96848909*	*96789269*	*96809942*
125 - 315	4	18.5	-	180M	MMG-AC, EFF2	42	48	200	*96848916*	*96789269*	*96809942*
	4	22	-	180L	MMG-AC, EFF2	42	48	200	*96848916*	*96789269*	*96809942*
	4	30	30	200L	MMG-AC, EFF2	42	55	200	*96848917*	*96789269*	*96809942*
	4	37	37	225S	MMG-AC, EFF2	42	60	224	*96848918*	*96789269*	*96809942*
	4	45	45	225M	MMG-AC, EFF2	42	60	224	*96848918*	*96789269*	*96809942*
	4	-	55	250SC	MMG-AC, EFF2	42	70	250	*96848920*	*96789274*	*96809943*
	4	-	75	250MC	MMG-AC, EFF2	42	70	250	*96848920*	*96789274*	*96809943*
125 - 400	4	37	-	225S	MMG-AC, EFF2	42	60	224	*96848918*	*96789269*	*96809942*
	4	45	-	225M	MMG-AC, EFF2	42	60	224	*96848918*	*96789269*	*96809942*
	4	55	-	250SC	MMG-AC, EFF2	42	70	250	*96848920*	*96789274*	*96809943*
150 - 250	4	-	37	225S	MMG-AC, EFF2	42	60	224	*96848918*	*96789269*	*96809942*
	4	-	45	225M	MMG-AC, EFF2	42	60	224	*96848918*	*96789269*	*96809942*
	4	-	55	250SC	MMG-AC, EFF2	42	70	250	*96848920*	*96789274*	*96809943*
	4	-	75	250MC	MMG-AC, EFF2	42	70	250	*96848920*	*96789274*	*96809943*
150 - 315	4	37	-	225S	MMG-AC, EFF2	42	60	224	*96848918*	*96789269*	*96809942*
	4	45	-	225M	MMG-AC, EFF2	42	60	224	*96848918*	*96789269*	*96809942*
	4	55	55	250SC	MMG-AC, EFF2	42	70	250	*96848920*	*96789274*	*96809943*
	4	75	75	250MC	MMG-AC, EFF2	42	70	250	*96848920*	*96789274*	*96809943*
	4	-	90	280S	MMG-AC, EFF2	42	80	250	*96848922*	*96789274*	*96809943*
	4	-	110	280M	MMG-AC, EFF2	42	80	250	*96848922*	*96789274*	*96809943*
150 - 400	4	55	-	250SC	MMG-AC, EFF2	42	70	250	*96848920*	*96789274*	*96809943*
	4	75	-	250MC	MMG-AC, EFF2	42	70	250	*96848920*	*96789274*	*96809943*
	4	90	-	280S	MMG-AC, EFF2	42	80	250	*96848922*	*96789274*	*96809943*
	4		132	315S	MMG-AC, EFF2	42	85	250	*96848923*	*96789274*	*96809943*

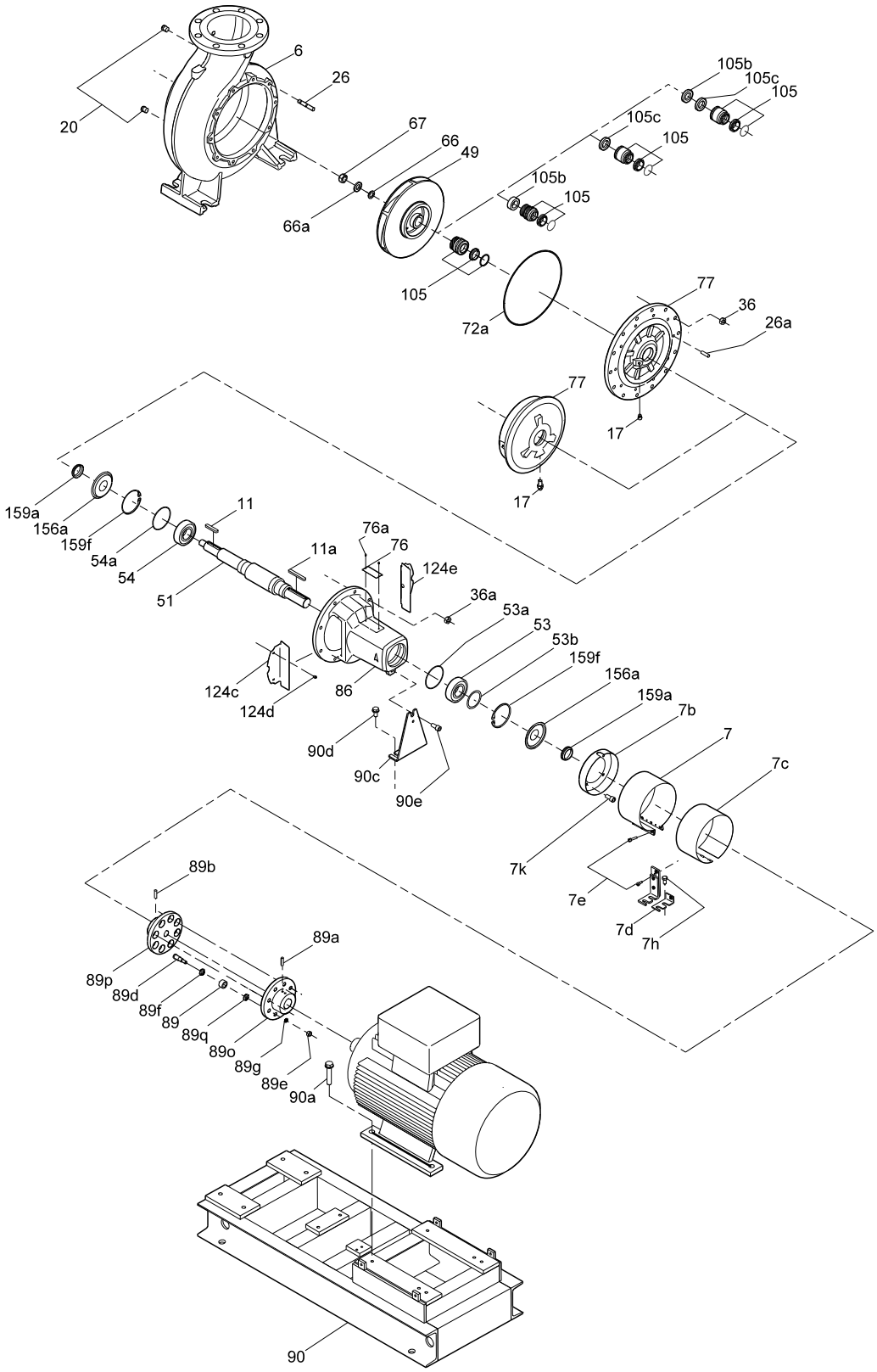
6
26
20
67
66
49
66a
105b
105c
105
105c
105
105b
105
105
72a
77
36
26a
77
17
17
159a
156a
159f
54a
54
51
11
11a
76a
76
124e
36a
53a
53
53b
159f
156a
159a
7b
7
7c
124c
124d
86
90d
90c
90e
7k
7e
7d
7h
89b
89a
89p
89d
89f
89
89q
89o
89g
89e
90a
90
TM045730

63. NM, NME, DNM, DNME

Model A, 50 Hz

Pump shaft diameter, overview

Pump type						Diameter [mm], pos. 51
NME	DNME	NM	DNM	PN 16		
		x		50 - ,32 -	125/142	16
			x	32 -		
		x		50 - ,32 -	160/150	
x					160/165	
			x	32 -	160/150	
	x				160/165	
x		x		50 - ,32 -	200/191	
					200/205	
	x		x	32 -	200/191	
					200/191	
x		x		65 - ,50 -	125/128	
	x		x	40 -	125/128	
x		x		65 - ,50 -	160/154	
					160/165	
	x		x	40 -	160/154	
					160/165	
x		x		65 - ,40 -	200/189	
					200/202	
	x		x	40 -	200/189	
					200/202	
x		x		80 - ,65 -	125/133	
	x		x	50 -	125/133	
x		x		80 - ,65 -	160/154	
					160/168	
	x		x	50 -	160/154	
					160/168	
x		x		80 - ,50 -	200/187	
					200/202	
	x		x	50 -	200/187	
					200/202	
x		x		100 - ,80 -	125/136	
					125/140	
	x		x	65 -	125/136	
					125/140	
x		x		100 - ,80 -	160/162	
					160/168	
	x		x	65 -	160/162	
					160/168	
x				100 - ,65 -	200/187	22
					200/200	
x					200/210	
	x		x	65 -	200/187	
					200/200	
	x				200/210	

NM, NME, DNM, DNME

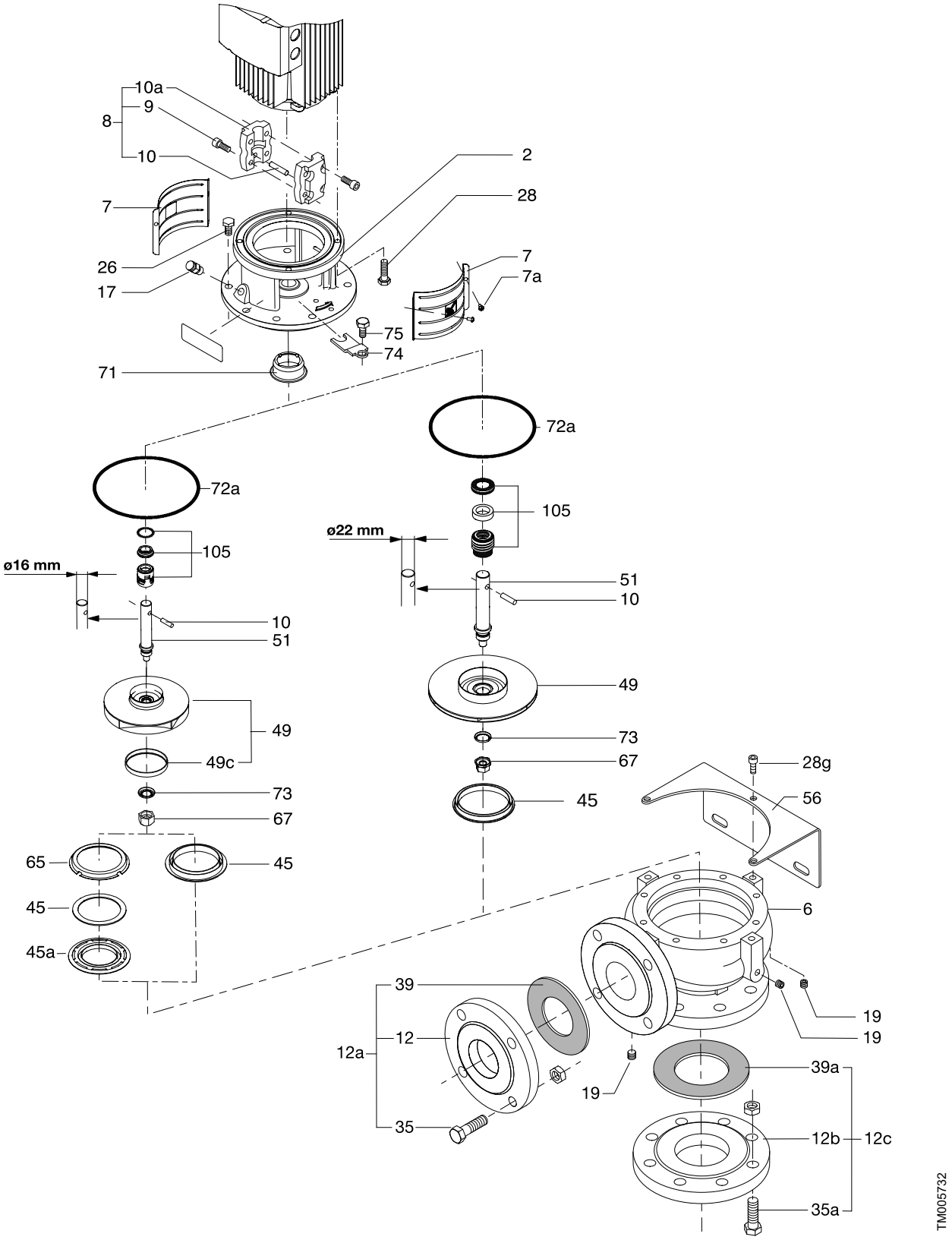

Coupling complete

Pos.	Kit No	339114	339119	339124	339128	345107	345108
	Motor/pump shaft diameter [mm]	14/16	19/16	24/16	28/16	28/22	38/22
	Description						
9	Screw	4	4	4	4	4	4
10	Pin	1	1	1	1	1	1
10a	Coupling half	2	2	2	2	2	2

Pos.		NEMA	NEMA	NEMA
	Kit No	485133	485134	485135
	Motor/pump shaft diameter [mm]	15.9/16	28.6/16	28.6/22
	Description			
9	Screw	4	4	4
10	Pin	1	1	1
10a	Coupling half	2	2	2

Shaft seal

Pos.	Kit No	485113	485114	485351	485371	485278	485372	985845	985909
	Pump shaft diameter [mm]	16	22	16	16	22	22	16	22
	Description	AUUE	AUUE	BUBE	BUBV	BBUE	BBUV	RUUE/V	RUUE/V
72a	O-ring	1	1	1	1	1	1	1	1
105	Shaft seal	1	1	1	1	1	1	1	1

Pos.	Kit No	985850	485454	485453	485460	485459	485458	485457
	Pump shaft diameter [mm]	16	16	22	16	16	22	22
	Description	AUUK	BUUE	BUUE	BQQE	BQQV	BQQE	BQQV
72a	O-ring	1	1	1	1	1	1	1
105	Shaft seal	1	1	1	1	1	1	1

Wear parts

Pos.	Kit No	485125	485122	485352	485279
	Pump shaft diameter [mm]	16	22	16	22
	Description	AUUE	AUUE	BUBE	BBUE
10	Coupling pin	1	1	1	1
45	Neck ring	1	-	1	-
49c	Wear ring	1	-	1	-
51	Shaft	1	1	1	1
67	Lock nut	1	1	1	1
72a	O-ring	1	1	1	1
73	Lock washer	1	1	1	1
105	Shaft seal	1	1	1	1

NM, NME, DNM, DNME

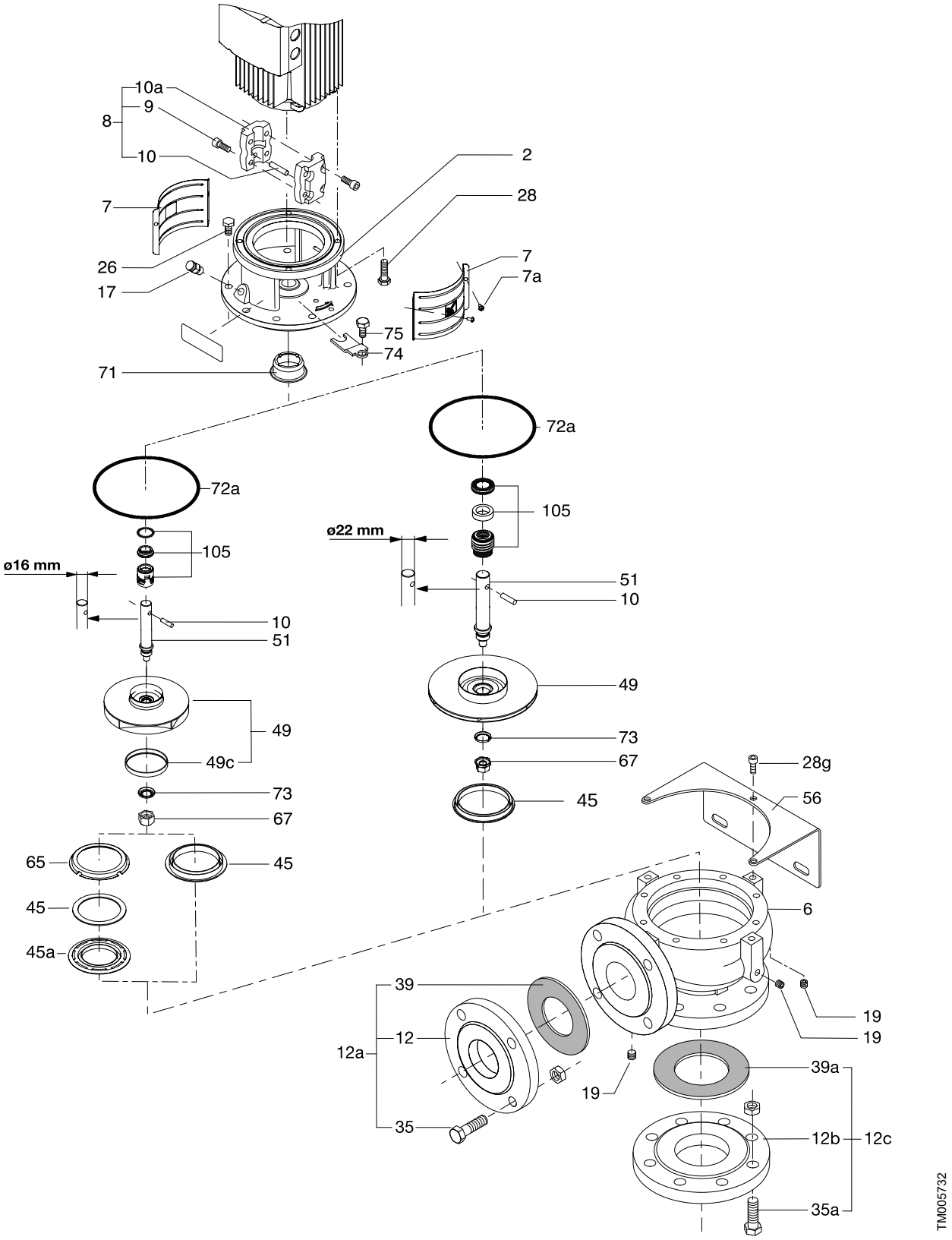

64. NP, NPE, DNP, DNPE

Model A, 50/60 Hz

Pump shaft diameter, overview

Pump type						Diameter [mm], pos. 51
NPE	DNPE	NP	DNP	PN 16		
x		x		50 - 32 -	125/132	16
					125/142	
	x		x	32 -	125/132	
					125/142	
x		x		50 - 32 -	160/152	
					160/165	
	x		x	32 -	160/152	
					160/165	
x		x		50 - 32 -	200/185	
					200/205	22
	x		x	32 -	200/185	16
					200/205	22
x		x		65 - 50 -	125/104	16
					125/117	
					125/128	
	x		x	40 -	125/104	
					125/117	
					125/128	
x		x		65 - 50 -	160/154	
					160/165	22
	x		x	40 -	160/154	16
					160/165	22
		x		65 - 40 -	200/189	
					200/202	
			x	40 -	200/189	
					200/202	
x		x		80 - 65 -	125/124	16
					125/133	
	x		x	50 -	125/124	
					125/133	
x		x		80 - 65 -	160/146	22
					160/161	
	x		x	50 -	160/146	
					160/161	
		x		80 - 50 -	200/180	
					200/202	
			x	50 -	200/180	
					200/202	
x		x		100 - 80 -	125/121	16
					125/130	22
					125/137	
	x		x	65 -	125/121	16
					125/130	22
					125/137	
		x		100 - 80 -	160/152	
					160/168	
			x	65 -	160/152	
					160/168	

Pump type						Diameter [mm], pos. 51
NPE	DNPE	NP	DNP	PN 16		
		x		100 - 65 -	200/183	33
					200/191	
					200/210	
			x	65 -	200/183	
					200/191	
					200/210	

NP, NPE, DNP, DNPE

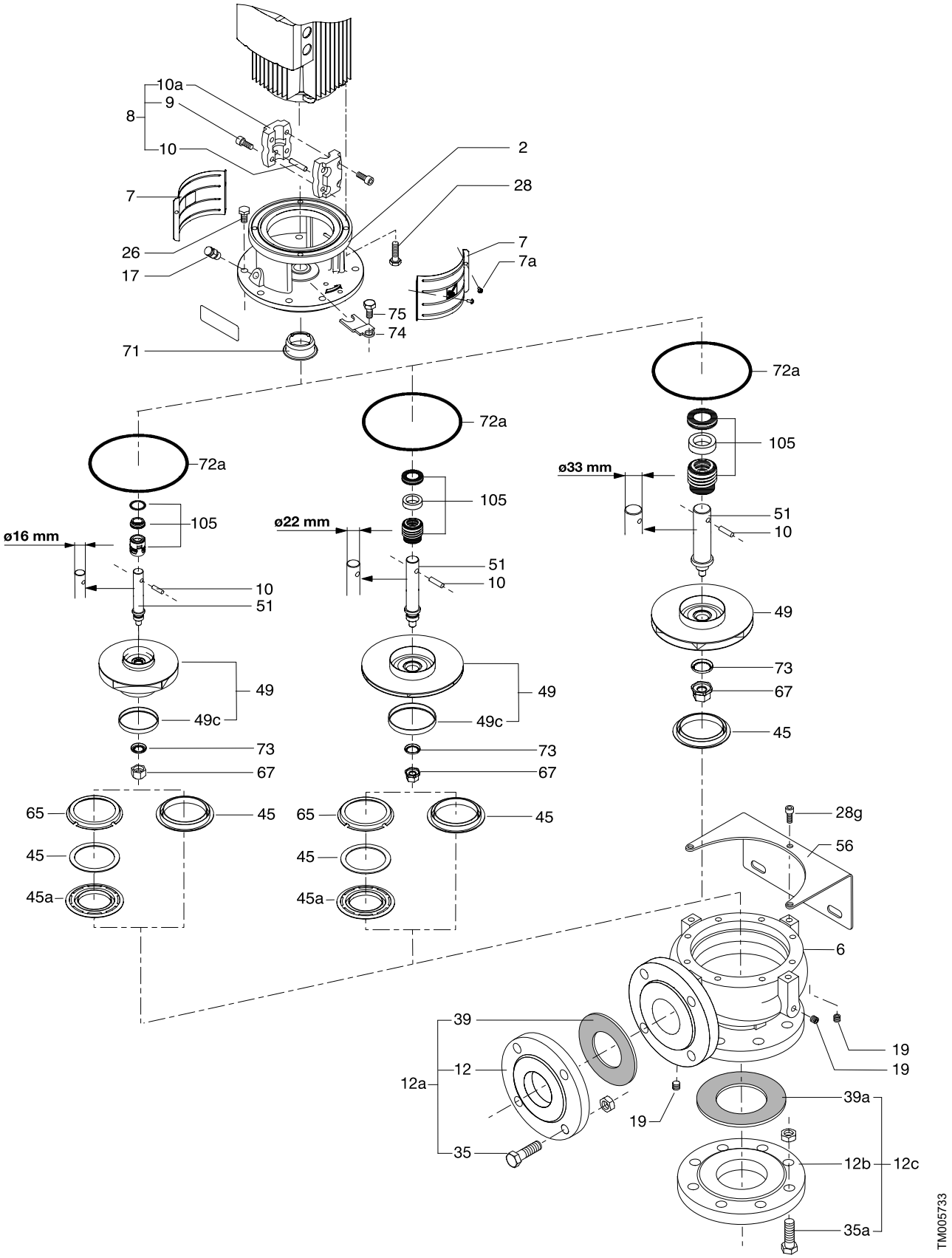

Coupling complete

Pos.	Kit No	339119	339124	339128	345107	345108	345109
	Motor/pump shaft diameter [mm]	19/16	24/16	28/16	28/22	38/22	42/22
	Description						
9	Screw	4	4	4	4	4	4
10	Pin	1	1	1	1	1	1
10a	Coupling half	2	2	2	2	2	2

Pos.				NEMA	NEMA
	Kit No	485039	485040	485134	485160
	Motor/pump shaft diameter [mm]	48/33	55/33	28.6/16	41.3/22
	Description				
9	Screw	4	4	4	4
10	Pin	1	1	1	1
10a	Coupling half	2	2	2	2

Shaft seal

Pos.	Kit No	485113	485114	485351	485371	485278	485372	985845	985909
	Pump shaft diameter [mm]	16	22	16	16	22	22	16	22
	Description	AUUE	AUUE	BUBE	BUBV	BBUE	BBUV	RUUE/V	RUUE/V
72a	O-ring	1	1	1	1	1	1	1	1
105	Shaft seal	1	1	1	1	1	1	1	1

Pos.	Kit No	985850	485454	485453	485460	485459	485458	485457	485456
	Pump shaft diameter [mm]	16	16	22	16	16	22	22	33
	Description	AUUK	BUUE	BUUE	BQQE	BQQV	BQQE	BQQV	BQQE
72a	O-ring	1	1	1	1	1	1	1	1
105	Shaft seal	1	1	1	1	1	1	1	1

Pos.	Kit No	485455	485353	485373	485448	985624	985625
	Pump shaft diameter [mm]	33	33	33	33	33	33
	Description	BQQV	BBUE	BBUV	BUUE	GQQE	GQQV
72a	O-ring	1	1	1	1	1	1
105	Shaft seal	1	1	1	1	1	1

Wear parts

Pos.	Kit No	485125	485122	485352	485279	485354	485449
	Pump shaft diameter [mm]	16	22	16	22	33	33
	Description	AUUE	AUUE	BUBE	BBUE	BBUE	BUUE
10	Coupling pin	1	1	1	1	1	1
45	Neck ring	1	-	1	-	-	-
49c	Wear ring	1	-	1	-	-	-
51	Shaft	1	1	1	1	1	1
67	Lock nut	1	1	1	1	1	1
72a	O-ring	1	1	1	1	1	1
73	Lock washer	1	1	1	1	1	1
105	Shaft seal	1	1	1	1	1	1
115	Spacing pipe	-	-	-	-	1	1

NP, NPE, DNP, DNPE

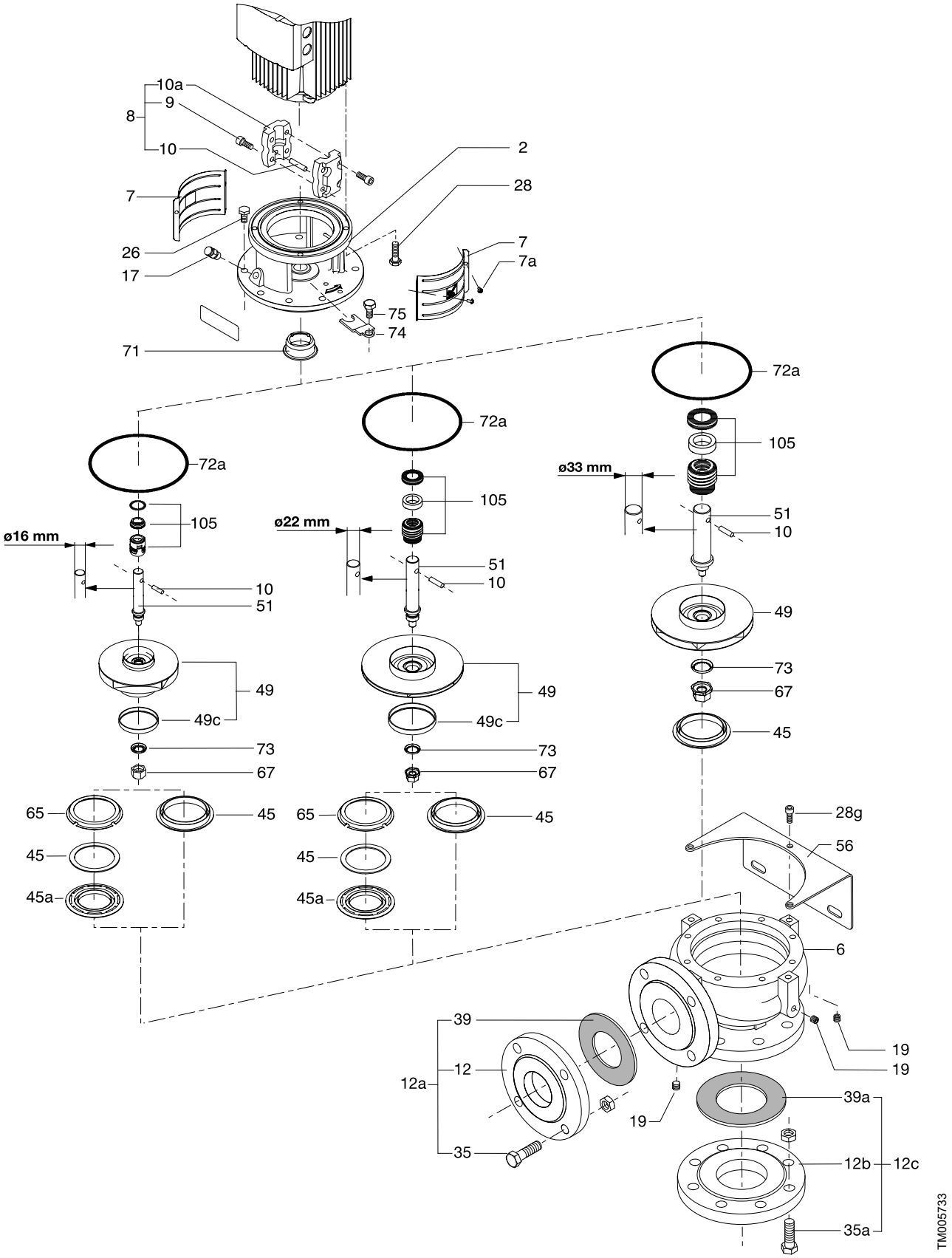

65. NS, PF

NS

NS 3-40, NS 4-23, NS 5-33
50 Hz

Shaft Seal kit

Pos.	Pump type	NS 3-40	NS 4-23	NS 5-33	NS 5-50, NS 5-60
	Kit No	***9893753***	***98937536***	***98937537***	***98937538***
16	Shaft seal, stationary part	1	1	1	1
16	Shaft seal, rotating part	1	1	1	1
28	O-ring	-	1	1	-
28	Gasket	1	-	-	1

Impeller kit

Pos.	Pump type	NS 3-40	NS 4-23	NS 5-33	NS 5-50	NS 5-60
	Kit No	***98937554***	***98937555***	***98937556***	***98937557***	***98937558***
2	Diffuser	-	-	-	-	-
4	Impeller	1	1	1	1	1
5	Impeller	1	-	-	1	1
28	O-ring	-	1	1	-	-
28	Gasket	1	-	-	1	1

Bulk and spares
Capacitor

Pos.	Pump type	NS 3-40	NS 4-23	NS 5-33, NS 13-18	NS 5-50, NS 6-30	NS 5-60, NS 6-40, NS 30-18
	Kit No	***98937567***	***98937568***	***98937569***	***98937570***	***98937571***
23	Capacitor	1	1	1	1	1

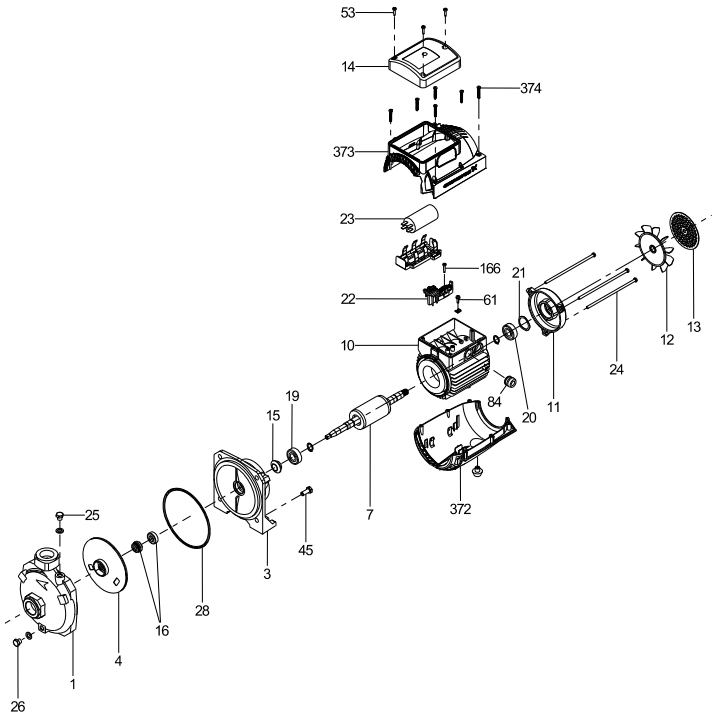

TM064629

NS 3-40

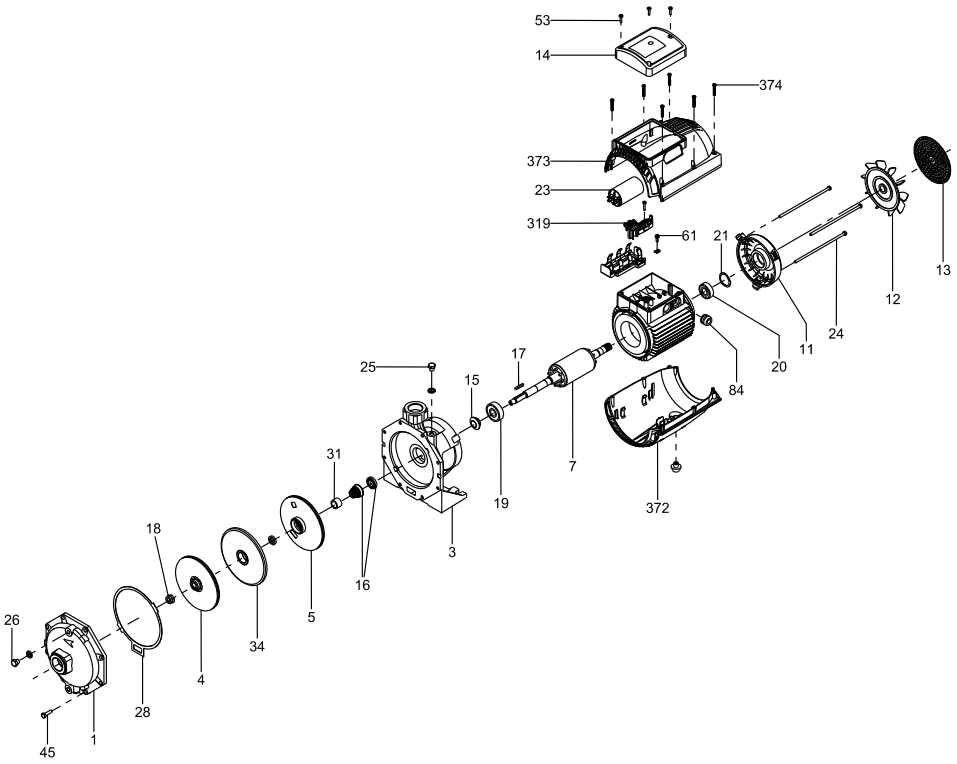

TM064628

NS 4-23

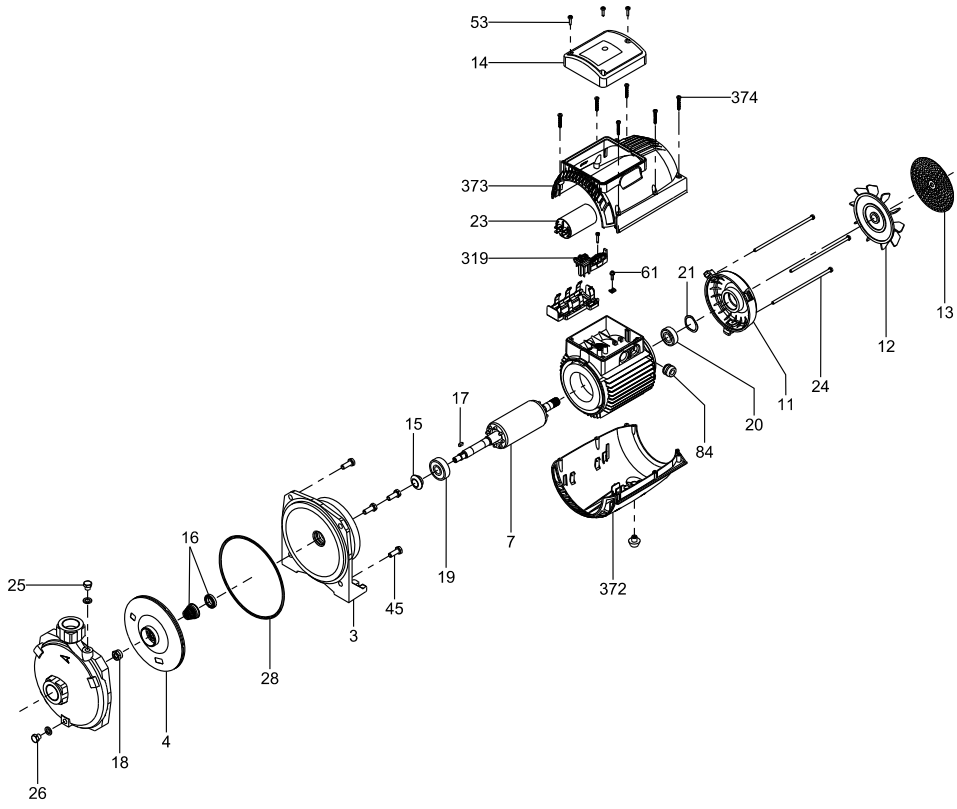

TM064630

NS 5-33

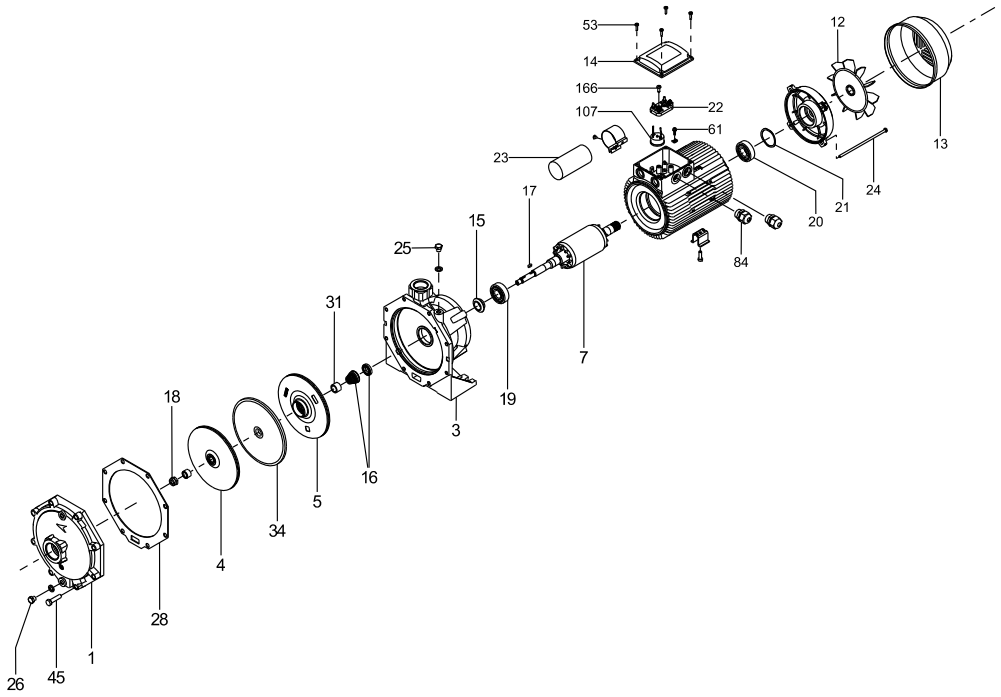

TM064632

NS 5-50

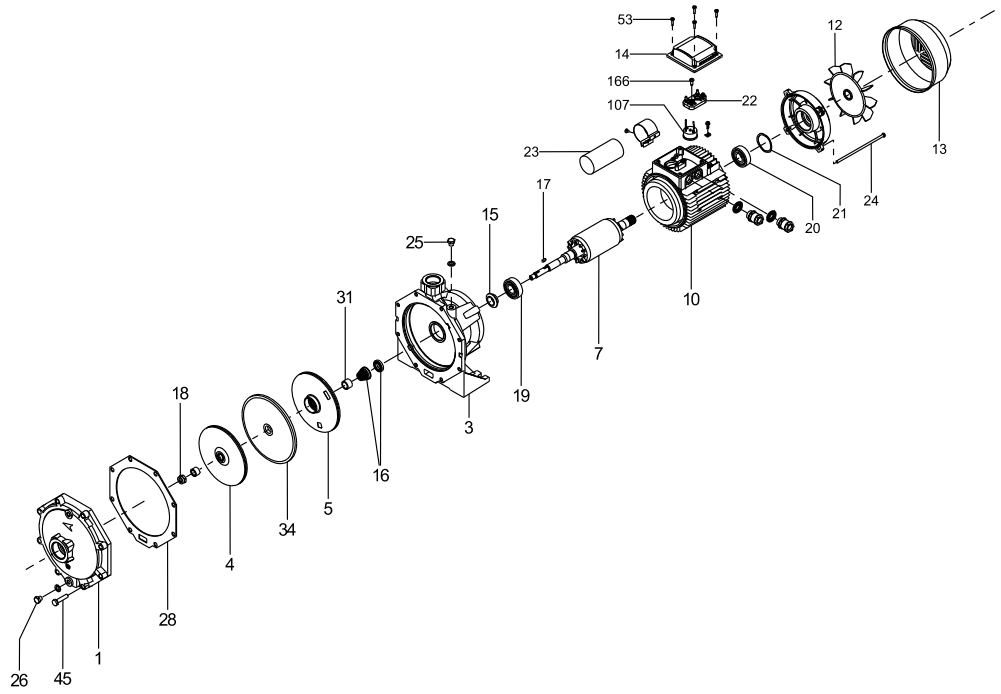

TM064631

NS 5-60

NS 6-30, NS 6-40
Shaft Seal kit

Pos.	Pump type	NS 6-30, NS 6-40
	Kit No	***98937539***
16	Shaft seal, stationary part	1
16	Shaft seal, rotating part	1
28	O-ring	1

Impeller kit

Pos.	Pump type	NS 6-30	NS 6-40
	Kit No	***98937559***	***98937560***
2	Diffuser	1	1
4	Impeller	2	2
5	Impeller	-	-
28	O-ring	1	1

Bulk and spares
Capacitor

Pos.	Pump type	NS 5-50, NS 6-30	NS 5-60, NS 6-40, NS 30-18
	Kit No	***98937570***	***98937571***
23	Capacitor	1	1

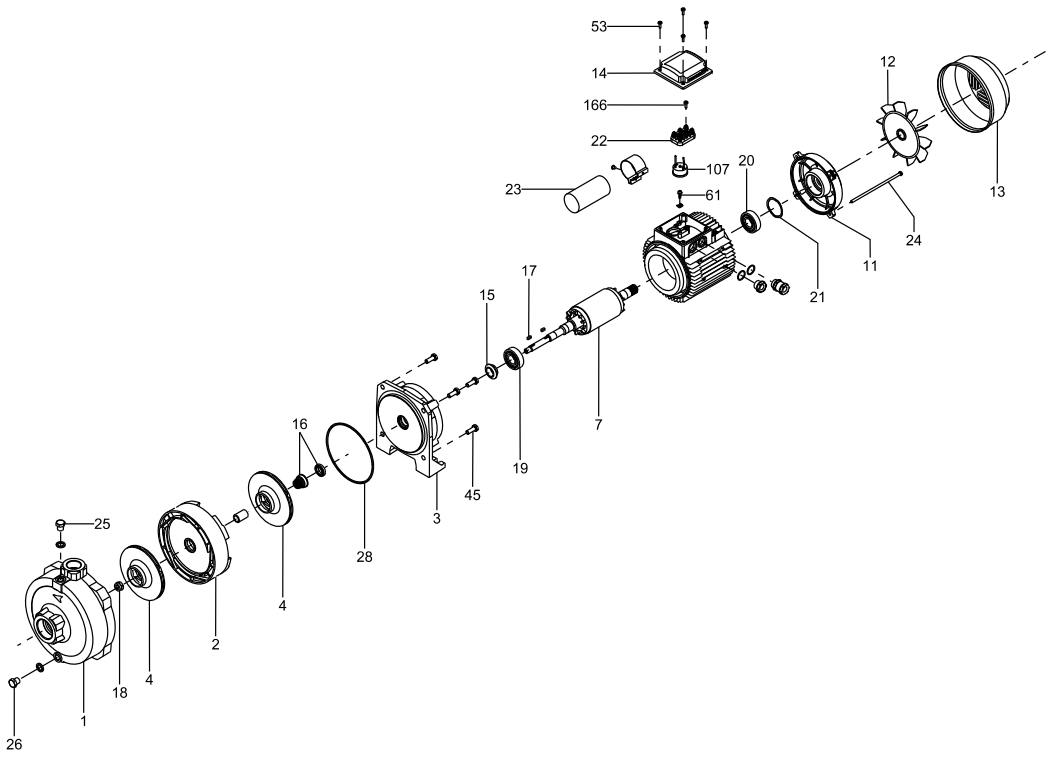

NS 6-30

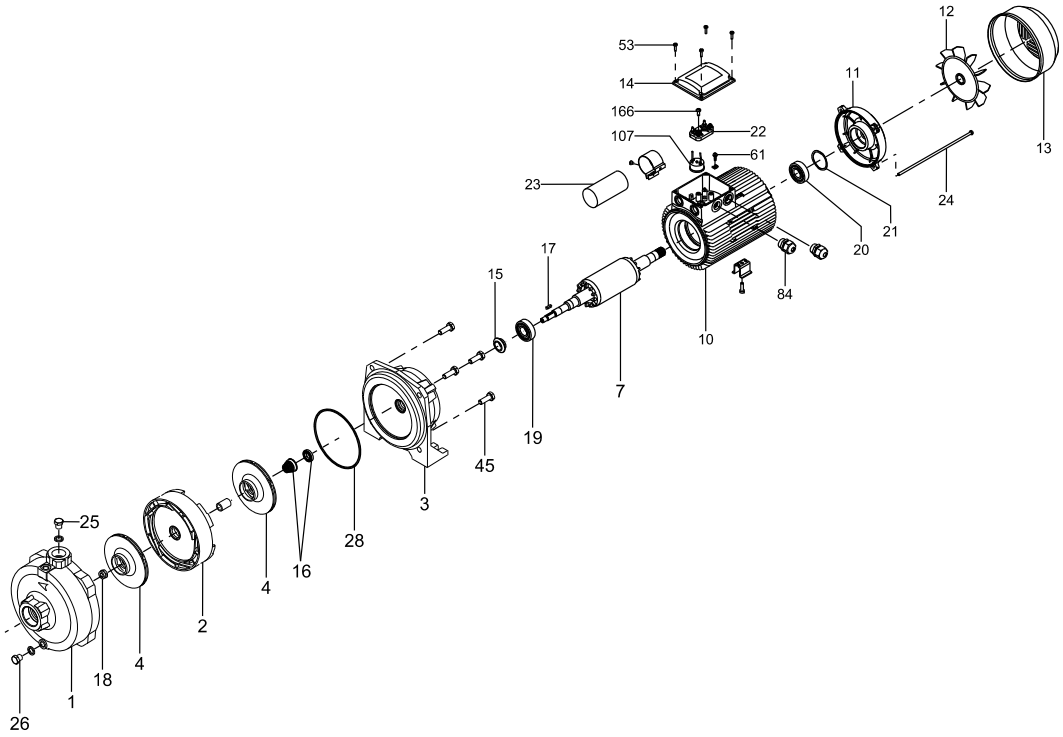

TM064634

NS 6-40

NS 13-18, NS 30-18, NS 30-30, NS 30-36

Shaft Seal kit

Pos.	Pump type	NS 13-18, NS 30-18	NS 30-30, NS 30-36
	Kit No	***98937540***	***98937551***
16	Shaft seal, stationary part	1	1
16	Shaft seal, rotating part	1	1
28	O-ring	1	1

Impeller kit

Pos.	Pump type	NS 13-18	NS 30-18	NS 30-30	NS 30-36
	Kit No	***98937561***	***98937562***	***98937563***	***98937564***
2	Diffuser	-	-	-	-
4	Impeller	1	1	1	1
5	Impeller	-	-	-	-
28	O-ring	1	1	1	1
28	Gasket	-	-	-	-

Bulk and spares

Capacitor

Pos.	Pump type	NS 5-33, NS 13-18	NS 5-60, NS 6-40, NS 30-18
	Kit No	***98937569***	***98937571***
23	Capacitor	1	1

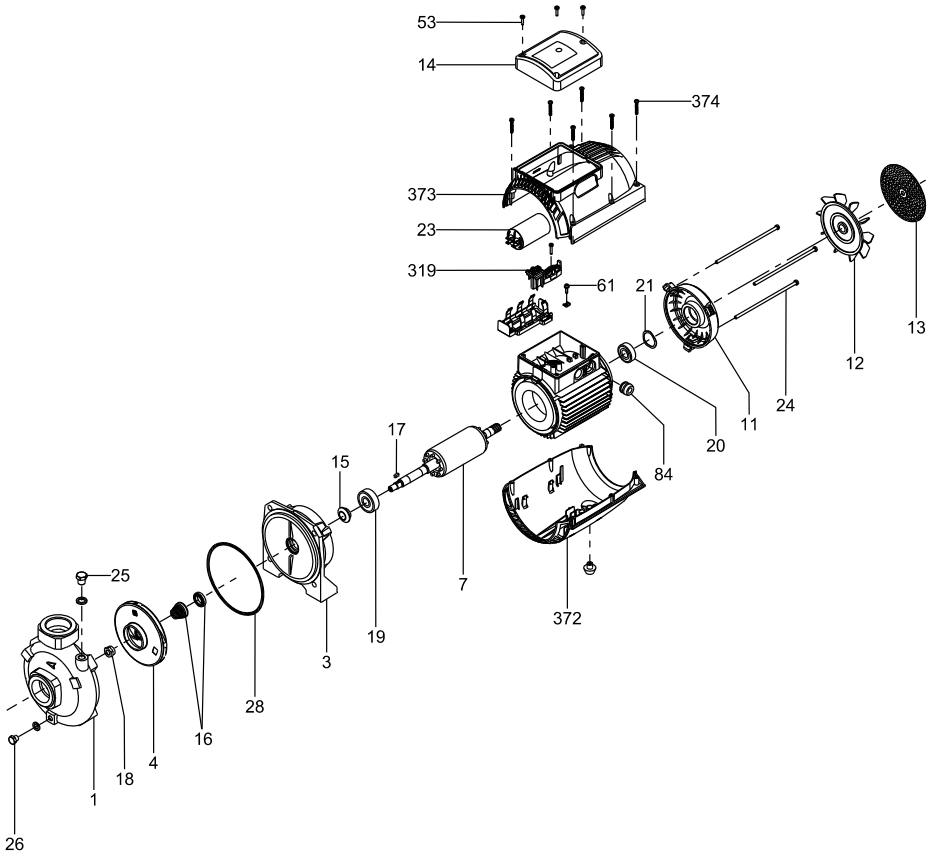

NS 13-18

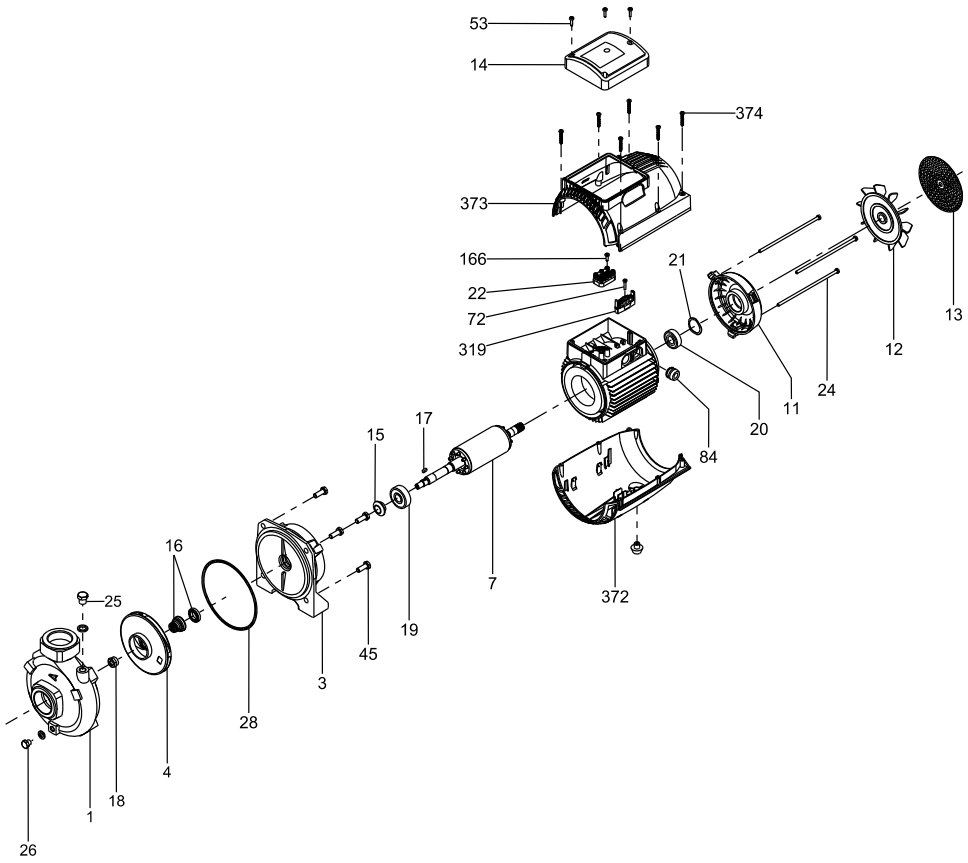

TM064640

NS 13-18 3~

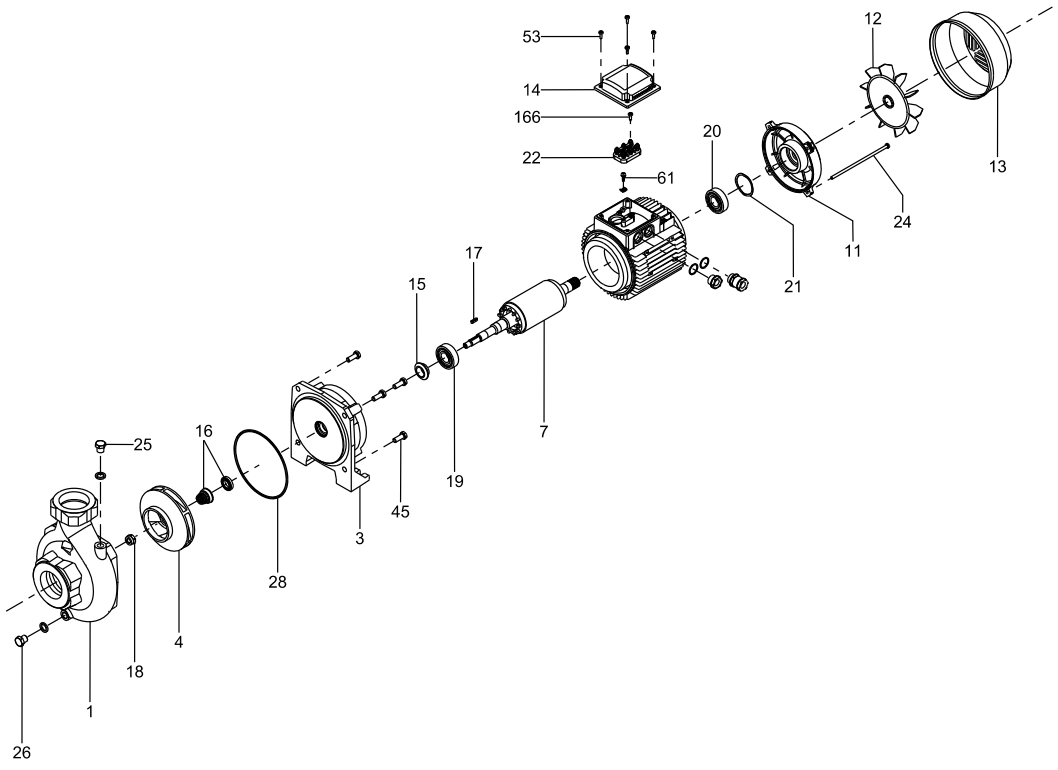

TM064637

NS 30-18 3~

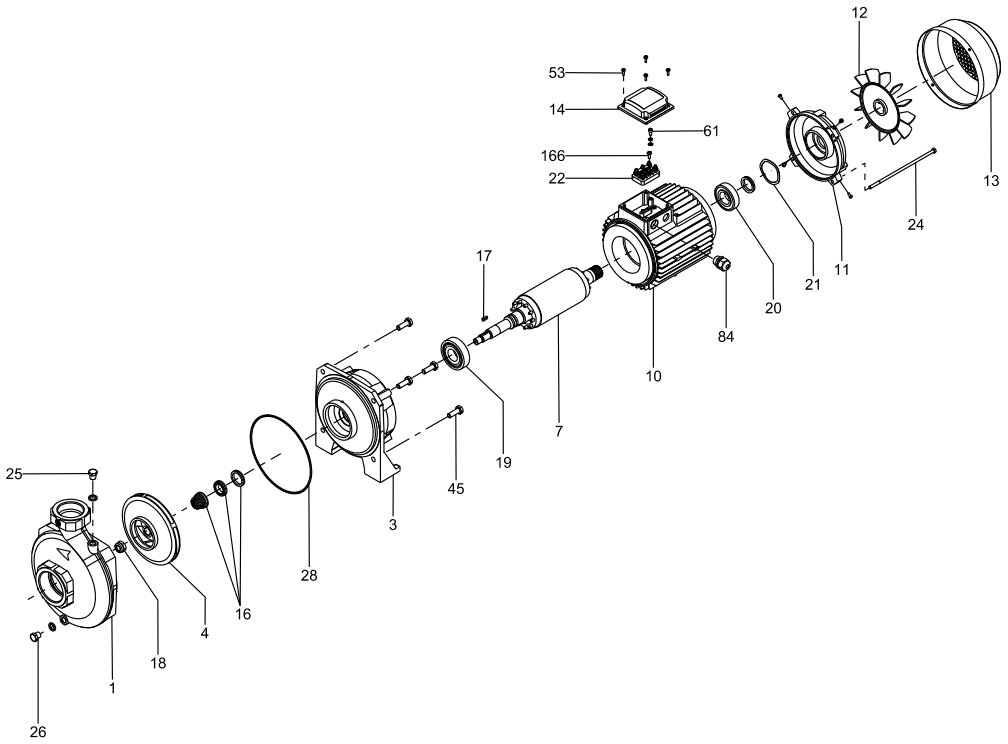

NS 30-30 3~, NS 30-36 3~

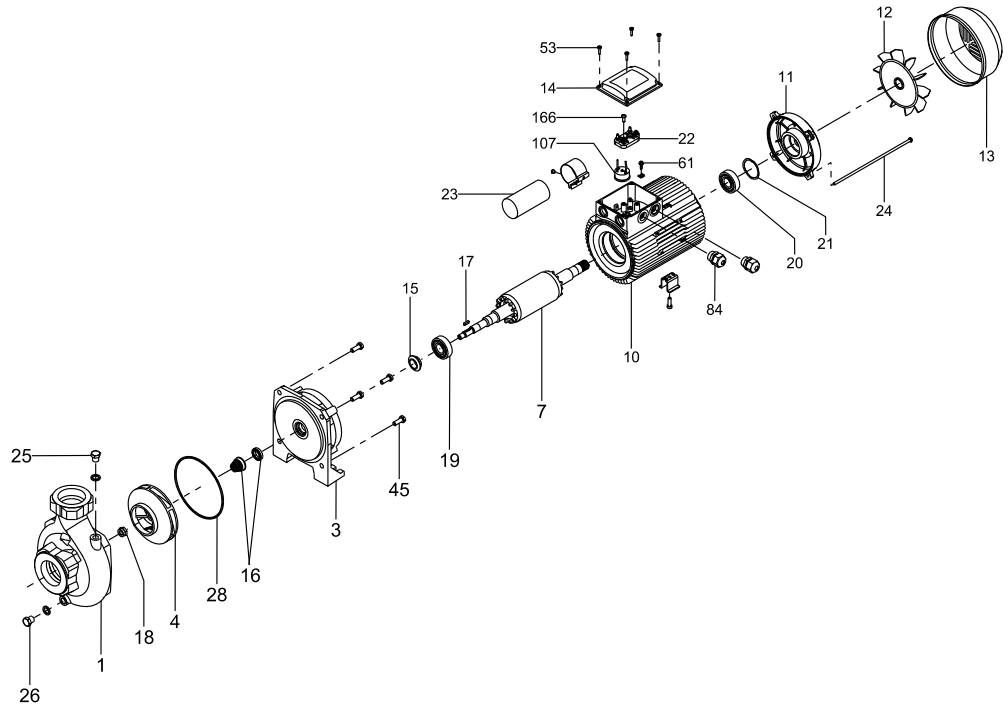

NS 30-18

PF

50 Hz

Shaft Seal kit

Pos.	Pump type	PF 1-30	PF 2-50
	Kit No	*98937552*	*98937553*
16	Shaft seal, stationary part	1	1
16	Shaft seal, rotating part	1	1
28	O-ring	1	1

Impeller kit

Pos.	Pump type	PF 1-30	PF 2-50
	Kit No	*98937565*	*98937566*
4	Impeller	1	1
28	O-ring	1	1

Fan and fan cover kit

Pos.	Pump type	PF 1-30	PF 2-50
	Kit No	*98980032*	*98980034*
12	Fan	1	1
13	Fan cover	1	1

Bulk and spares
Capacitor

Pos.	Pump type	PF 1-30	PF 2-50
	Kit No	*98937572*	*98937573*
23	Capacitor	1	1

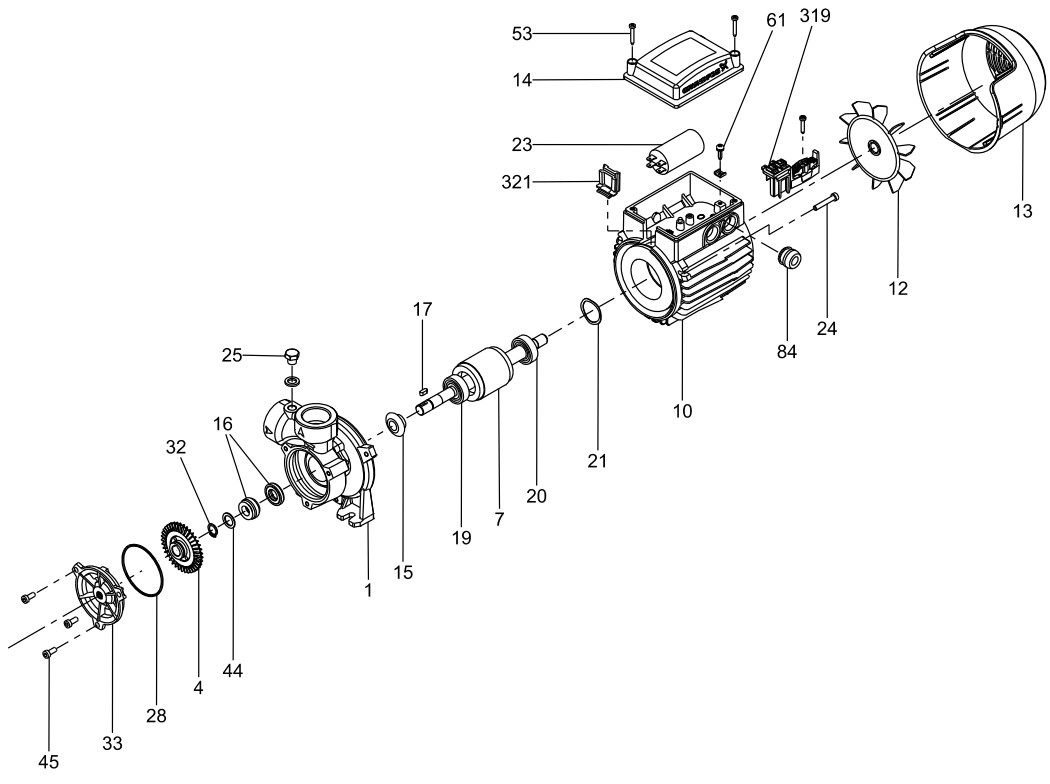

PF 2-50

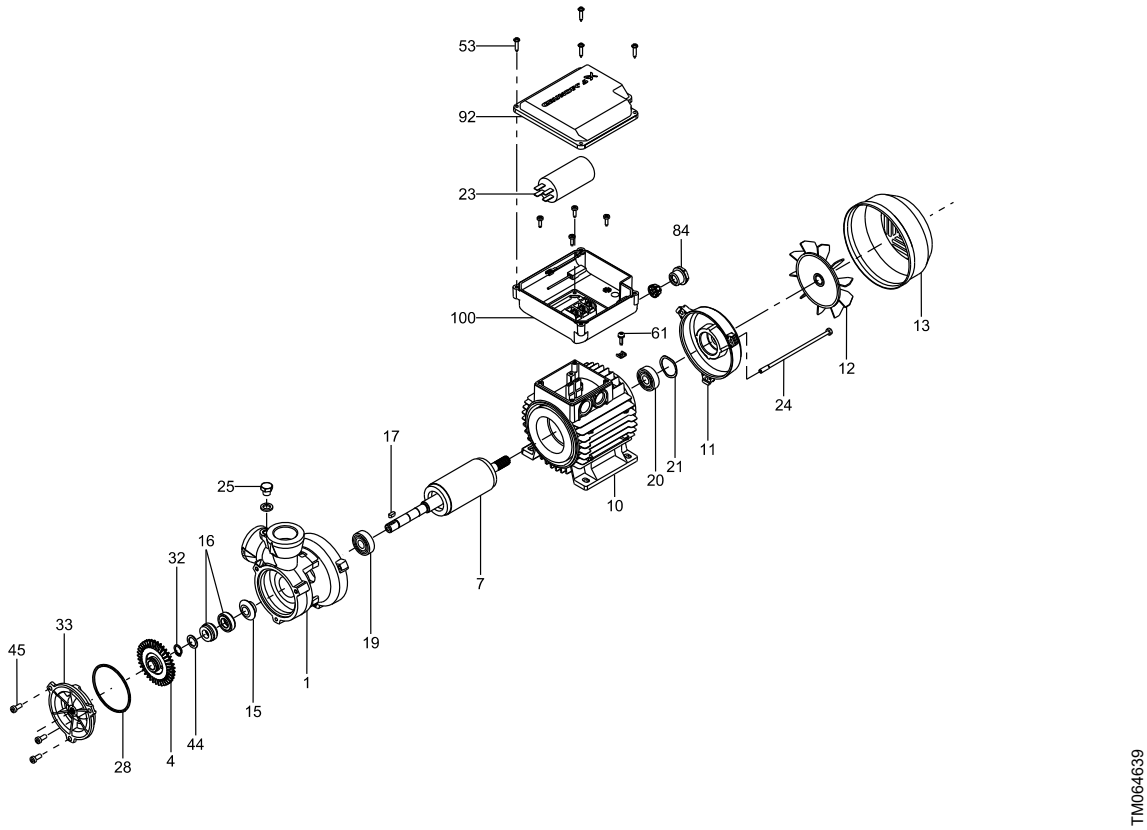
53
92
23
84
100
61
13
12
24
11
21
20
10
17
25
16
32
7
33
45
19
1
15
44
4
28
TM064639

PF 1-30

66. PM, PM Rain

Pressure Manager

50/60 Hz, PM 1, PM 2

Control board

Pos.	Model	PM 2
	Description/kit No	***97702432***
4	Control board	1
3	Terminal block cover	1

Front cover

Pos.	Model	PM 2
	Description/kit No	***97702434***
1	Screw	4
2	Front cover	1
5a	O-ring	1

Membrane

Pos.	Model	PM 2
	Description/kit No	***97702431***
7	Membrane	1
8	Membrane cover	1
9	Screw	8

Outlet with non-return valve

Pos.	Model	PM 1, PM 2
	Description/kit No	***97702433***
6	Outlet with non-return valve	1
10	Clip	1

Pressure sensor

Pos.	Model	PM 2
	Description/kit No	***97702422***
18	Pressure transducer	1
	Pressure transducer cable	1

PM 1

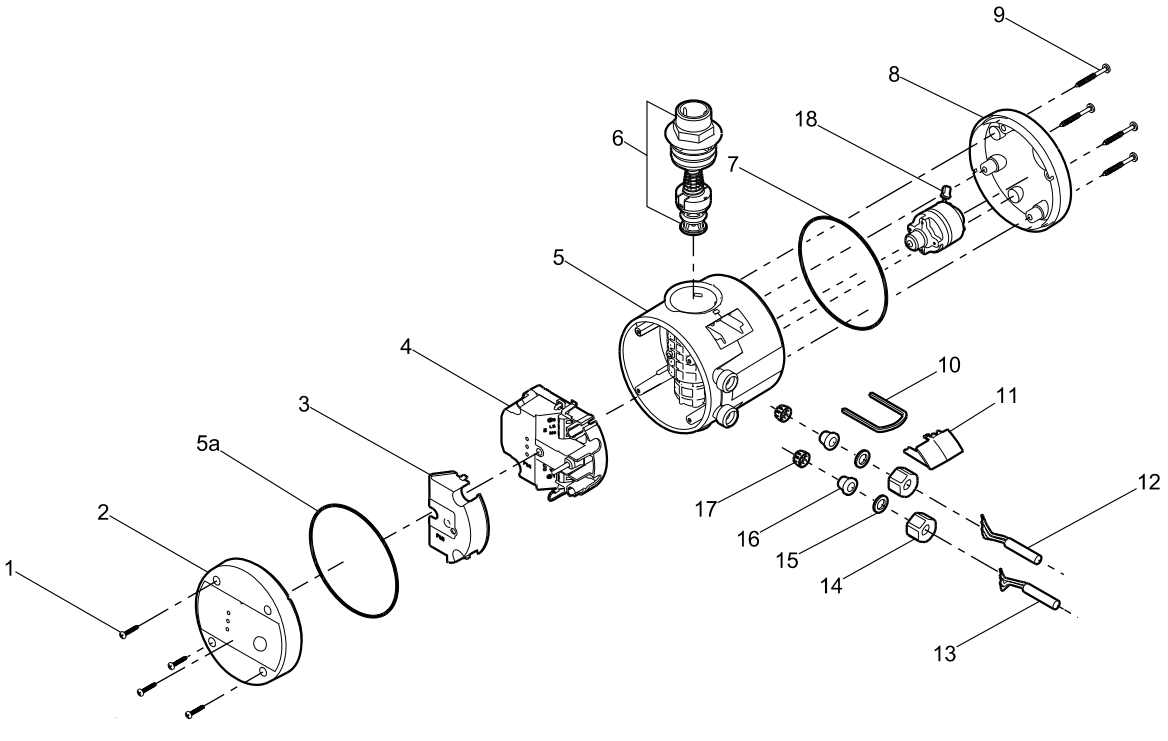

TM044529

PM 2

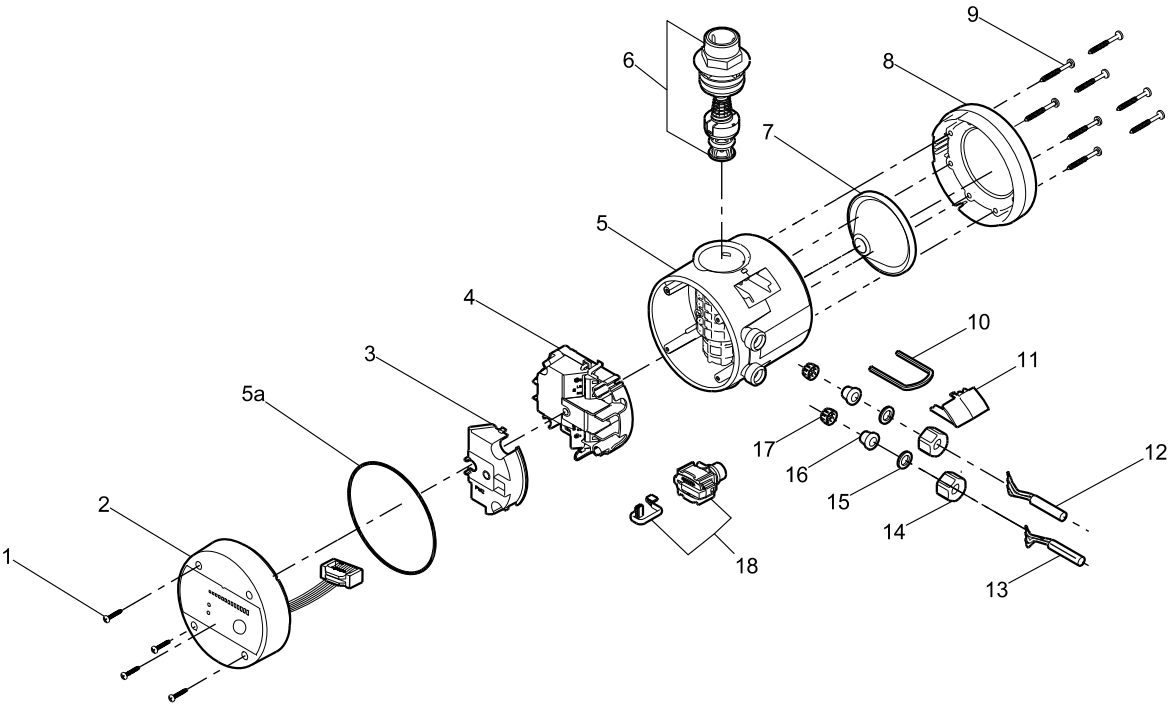

TM044530

PM Rain

50/60 Hz, PM Rain

Control board

Pos.	Description/kit No	*98466536*
2	Control board	1
	Terminal block cover	1

Double non-return valve

Pos.	Description/kit No	*98466570*
4	Double non-return valve	1
	Fitting	1
	O-ring	1
	screw	4
	Threaded plate	2

Front cover

Pos.	Description/kit No	*98466469*
1	Screw	4
	Front cover	1
	O-ring	1

Membrane

Pos.	Description/kit No	*97702431*
7	Membrane	1
8	Membrane cover	1
9	Screw	8

Outlet with non-return valve

Pos.	Description/kit No	*98466562*
3	Outlet with non-return valve	1
	Clip	1

Pressure sensor

Pos.	Description/kit No	*97702422*
18	Pressure Sensor	1
	O-ring	1
	Pressure Sensor cable	1

PM Rain

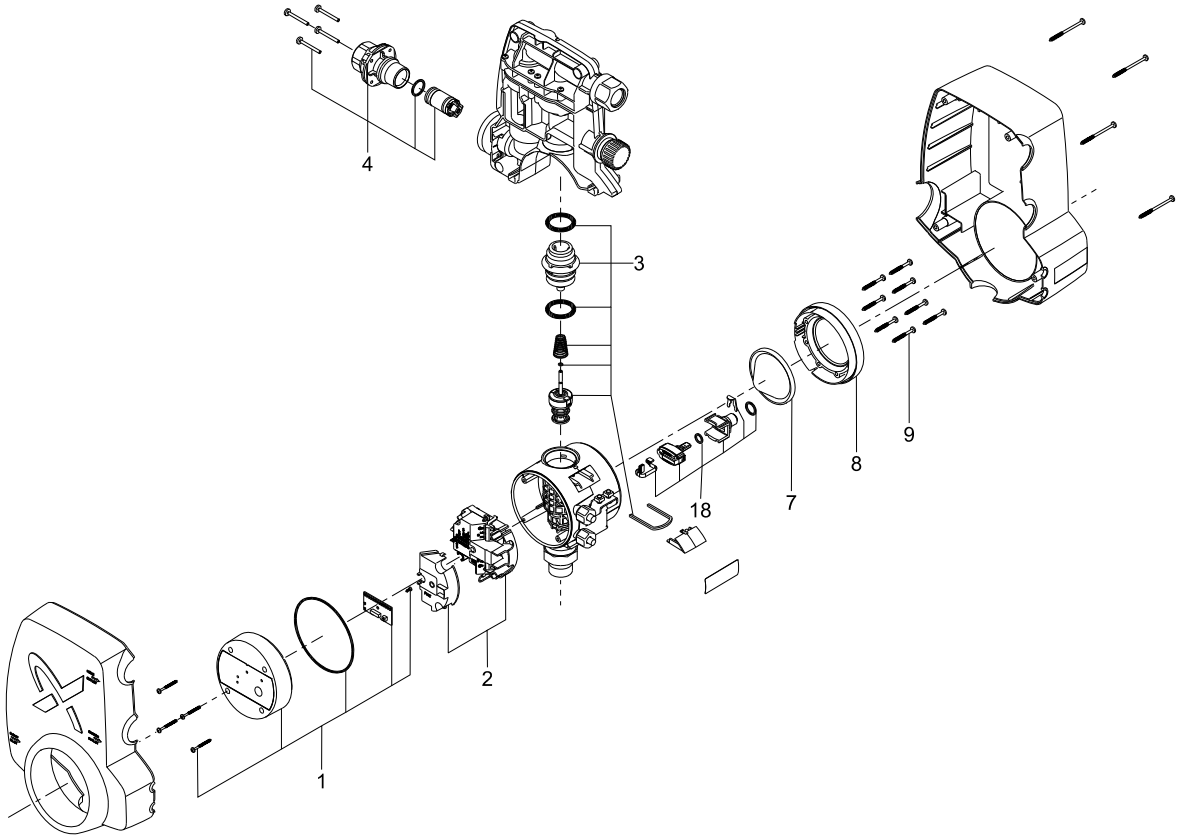

67. RC

50/60 Hz

Blanking flange for sleeve

Description/Kit No	97571010 [1] (Neoprene)	98923440 [2] (EPDM)
Blanking flange for sleeve	1	1
O-ring	1	1
Hexagon socket head cap screw	16	16

1) Refrigerant: NH_3 and HFC

2) Refrigerant: CO_2

Differential pressure transmitter

Description	Kit No
0-5 bar NPT 1/8 (Model: GE Druck PTX5072-TC-A1-CA-H0-PGWWD)	98761404
0-5 bar G1/4 (Model: GE Druck PTX5072-TC-A1-CA-H0-PBWWD)	98761401

O-ring for pump

Description/kit No	97682653 [1] (Neoprene)	98537720 [2] (EPDM)
O-ring ∅15	1	1
O-ring ∅75	1	1
O-ring ∅114	1	1

1) Refrigerant: NH_3 and HFC

2) Refrigerant: CO_2

Power supply cable

Description	Kit No
Power supply cable, 5 m	97682654
Power supply cable, 5 m (ETL/UL listed)	97682726

PTC cable

Description	Kit No
PTC cable, 5 m	97682656
PTC cable, 5 m (ETL/UL listed)	97682728

RC

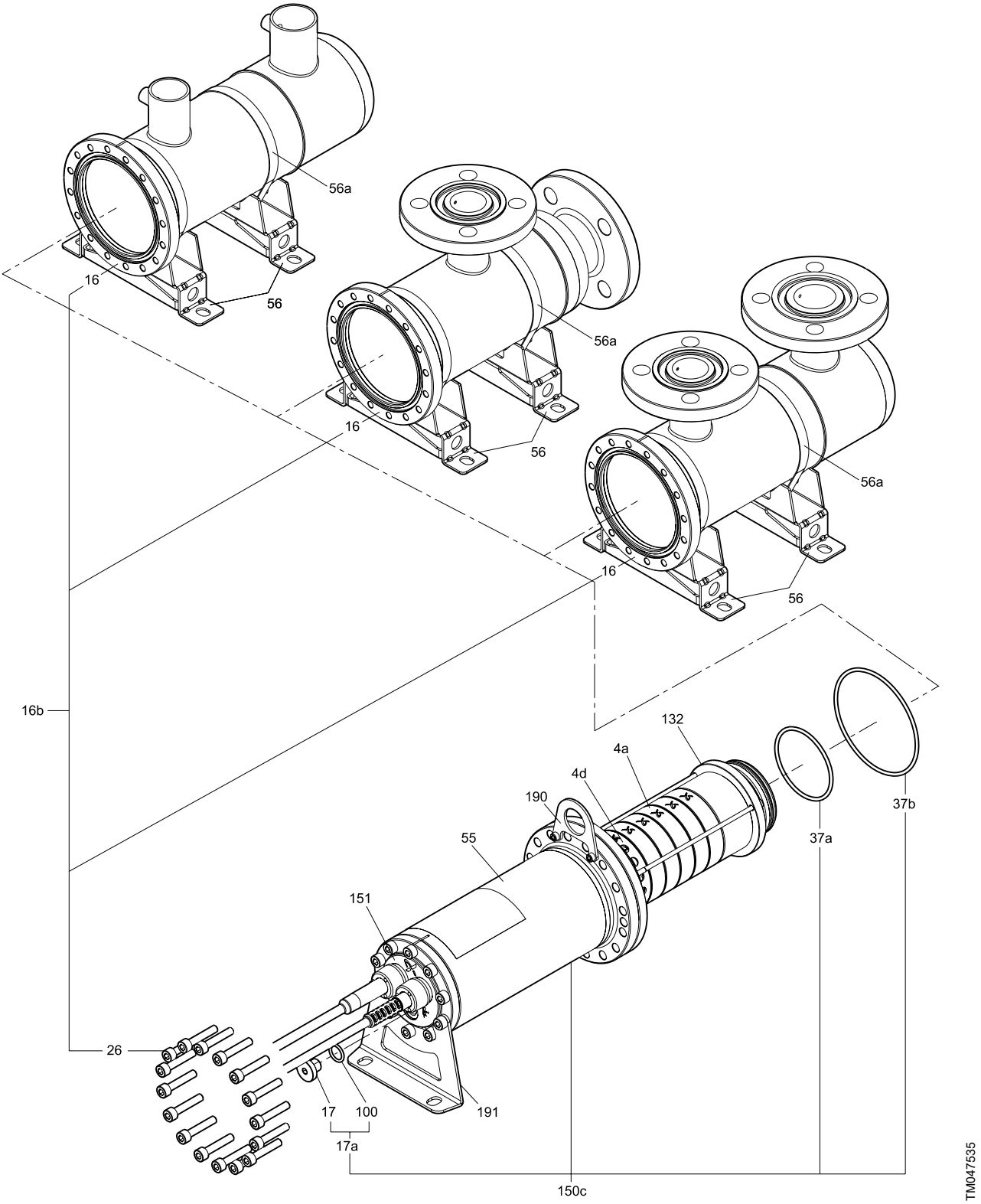
56a
16
56
56a
16
56
56a
16
56
16b
132
4a
4d
190
55
151
37b
37a
26
17
100
191
17a
150c
TM047535

Service unit

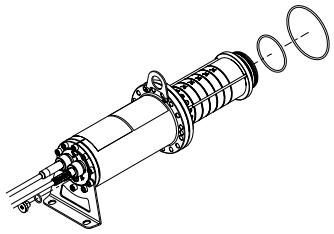

TM049484

The service unit is a complete pump (chamber stack, motor and cables), but without pump sleeve and feet. A service unit comes with a complete set of O-rings for two internal interfaces and the main seal.

Model	Refrigerant	Stages	Number of impellers	Frequency [Hz]	Supply voltage [V]	Variant	Kit No
RC2	R744 (CO_2)	7	7	50	3 x 380-415	RC2-7 A-X-I-E-////-FY-I-D-N	*96934029*
			5	60	3 x 440-480	RC2-7/5 A-X-I-E-////-EY-I-F-N	*96934047*
					3 x 208-230	RC2-7/5 A-X-I-E-////-EZ-I-F-N	*96934056*
	R717 (NH_3)	10	10	50	3 x 380-415	RC2-10 A-X-I-C-////-FY-I-D-N	*96934032*
	HFC	7	5	50	3 x 380-415	RC2-7/5 A-X-I-C-////-FY-I-D-N	*96934035*

Model	Refrigerant	Stages	Number of impellers	Frequency [Hz]	Supply voltage [V]	Variant	Kit No
RC5	R744 (CO_2)	7	7	50	3 x 380-415	RC5-7 A-X-I-E-////-FY-I-D-N	*96934030*
			5	60	3 x 440-480	RC5-7/5 A-X-I-E-////-EY-I-F-N	*96934048*
	R717 (NH_3)	10	10	50	3 x 380-415	RC5-10 A-X-I-C-////-FY-I-D-N	*96934033*
	HFC	7	5	50	3 x 380-415	RC5-7/5 A-X-I-C-////-FY-I-D-N	*96934036*

Model	Refrigerant	Stages	Number of impellers	Frequency [Hz]	Supply voltage [V]	Variant	Kit No
RC8	R744 (CO_2)	7	7	50	3 x 380-415	RC8-7 A-X-I-E-////-FY-I-D-N	*96934031*
			5	60	3 x 440-480	RC8-7/5 A-X-I-E-////-EY-I-F-N	*96934049*
					3 x 208-230	RC8-7/5 A-X-I-E-////-EZ-I-F-N	*96934058*
	R717 (NH_3)	10	10	50	3 x 380-415	RC8-10 A-X-I-C-////-FY-I-D-N	*96934034*
	HFC	7	5	50	3 x 380-415	RC8-7/5 A-X-I-C-////-FY-I-D-N	*96934037*

68. RCME

50/60 Hz

The service kits below apply to RCME systems with the following product number:

- RCME0503.

Controller, CU 361

Pos.	Description/Kit no	98102600
6	Controller, CU 361 (programmed)	1

Mains water valve

Pos.	Description/Kit no	98102589
12	Mains water valve, complete	1

Mains water valve coil

Pos.	Description/Kit no	98102588
12a	Mains water valve coil incl. plug	1

Mains water valve diaphragm

Pos.	Description/Kit no	98102590
12b	Mains water valve diaphragm	1

Power supply, 24 VDC

Pos.	Description/Kit No	98102595
1	Power supply, 24 VDC	1

The service kits below apply to RCME systems with the following product numbers:

- *98442752*
- *98442754*.

Controller, CU 372

Pos.	Description/Kit no	98146954
6	Controller, CU 372 (programmed)	1

Mains water valve

Pos.	Description/Kit no	98102594
12	Mains water valve, complete	1

Mains water valve coil

Pos.	Description/Kit no	98102599
12a	Mains water valve coil incl. plug	1

The service kits below apply to RCME systems with the following product numbers:

- RCME0503
- 98442752
- 98442754.

Ball valve

Pos.	Description/Kit no	98102603
25	Ball valve and tank adaptor	1

Booster pump sensor

Pos.	Description/Kit no	98102593
4	Booster pump sensor	1

Booster tank level sensor

Pos.	Description/Kit no	98102586
5	Booster tank level sensor	1

Cable for booster tank level sensor

Pos.	Description/Kit no	98102587
5a	Cable for booster tank level sensor	1

Drain cock

Pos.	Description/Kit no	98102604
26	Drain cock	1

Flow sensor

Pos.	Description/Kit no	98102601
7	Flow sensor, 2.9 m cable	1

Flow sensor pipe

Pos.	Description/Kit no	98102602
7a	Flow sensor pipe incl. O-rings, nipples and unions	1

Ground tank level sensor

Pos.	Description/Kit no	98102596
8	Ground tank level sensor	1

Lid for booster tank

Pos.	Description/Kit no	98102585
3	Lid for booster tank	1

Non-return valve

Pos.	Description/Kit no	98102591
9	Non-return valve	1

Sensor interface module

Pos.	Description/Kit no	98102598
10	Sensor interface module, SI 010 CNV	1

RCME

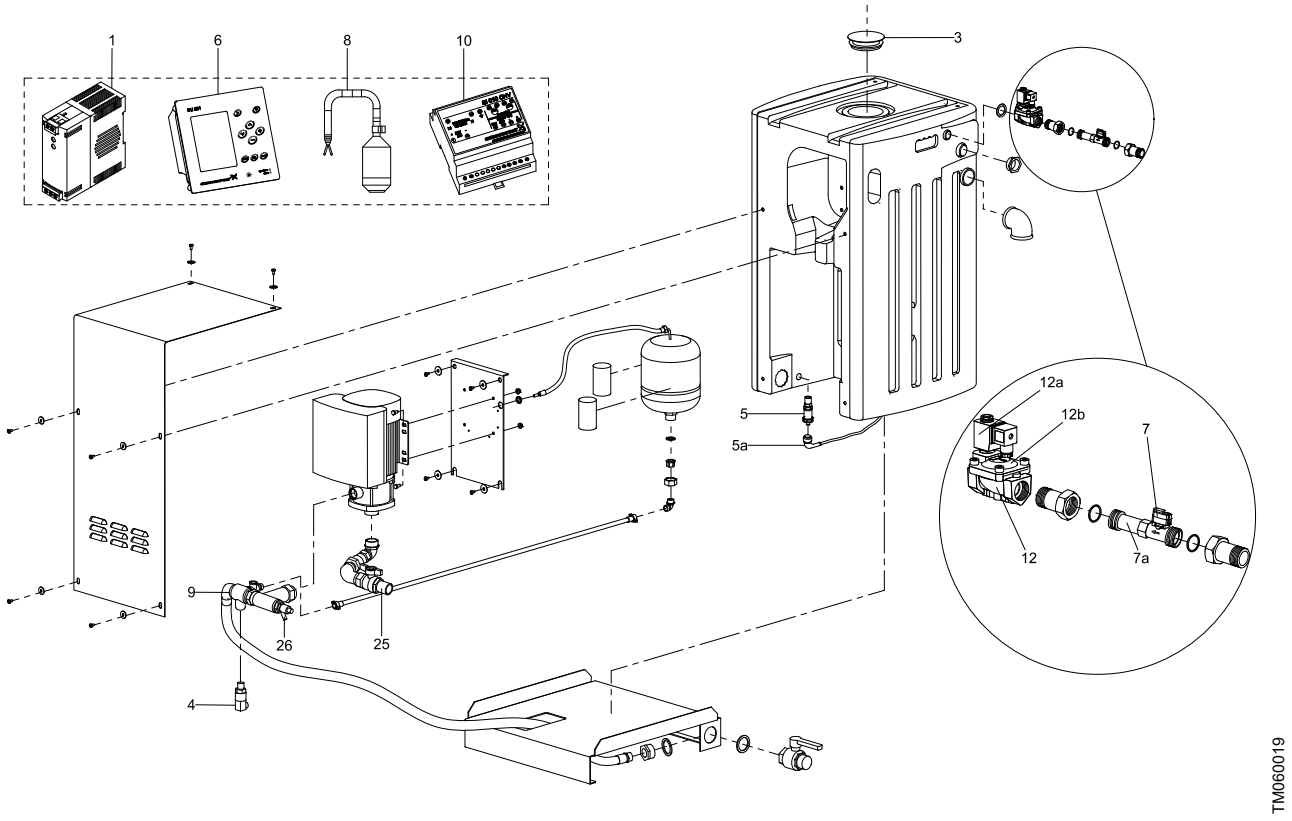

69. S pumps

Ranges 34 and 42

50/60 Hz

Gen: generation
Int: interchangeability

Bearing

Pos.	Range	S34			S34X	S42, S42X
	Description	Gen=A/int= Gen=B/int=	Gen=B/int=A Gen=B/int=B	Gen=B/int=D Gen=C/int=	All generations	All generations
	Kit No	*96494645*	*96494645*	*96494644*	*96494645*	*96494646*
60	Retaining ring	1	1	1	1	1
153	Ball bearing (upper)	1	1	1	1	1
154	Ball bearing (lower)	1	1	1	1	1
188	Retaining ring	1	1	1	1	1
197	Washer	1	1	2	1	1

Shaft seal

Pos.	Range	S34, S34X		S42	S42	S42X
	Description	Gen=B/int=A Gen=B/int=B	Gen=B/int=D Gen=C/int=	Gen=A Gen=B	Gen=C Gen=D	All generations
	Kit No	*96567323*	*96567334*	*96567329*	*96567334*	*96567334*
105	Shaft seal	1	1	1	1	1

Cable

Pos.	Description/Kit No	Range		Cable length			
		34	42	10 m	15 m	25 m	50 m
181	4 x 1.5 mm^2	•	•	Not available. Contact Grundfos.			
	7 x 1.5 mm^2	•	•	*96307955*	*96307956*	*96307957*	*96307958*
	9 x 1.5 mm^2		•	*96307963*	*96307964*	*96307965*	*96307966*

Cable inlet

Pos.	Cable type	4 x 1.5 mm^2	7 x 1.5 mm^2	9 x 1.5 mm^2
	Description/Kit No	*96494649*	*96494650*	*95113752*
168	Cable inlet	1	1	1
180	Cable clamp	1	1	1
181a	Screw	2	3	3
198	Rubber seal	1	1	-

Cable inlet gasket

Pos.	Cable type	4 x 1.5 mm^2	7 x 1.5 mm^2	9 x 1.5 mm^2
	Description/Kit No	Not availa-ble	*96253077*	*96066568*
198	Rubber seal	-	1	1

Moisture switch

Pos.	Description/kit No	*96256056*
520	Moisture switch	1
-	Adjusting gauge	1
-	Connector set (6 pcs)	1

Note: Two moisture switches are used for explosion-proof pumps.

O-ring

Pos.	Range		34, 34X	42, 42X
	Description/kit No		*96255888*	*96255889*
37b	O-ring	219.3 x 5.7	1	-
		269.3 x. 5.7	-	1
72	O-ring	159.3 x 5.7	1	-
		259.3 x 5.7	-	1
72a	O-ring	149.3 x 5.7	1	-
		269.3 x 5.7	-	1
100	O-ring	16.3 x 2.4	1	1
		10.3 x 2.4	-	1
109	O-ring	59.5 x 3.0	1	-
		59.2 x 3.0	-	1
157	O-ring	114.5 x 3.0	1	-
		129.3 x 5.7	1	-
		149.3 x 5.7	-	1
		159.3 x 5.7	-	1
194	O-ring	16.3 x 2.4	-	2
		10.3 x 2.4	3	2
		8.3 x 2.4	-	2
495	O-ring	16.3 x 2.4	1	1

O-ring for oil/inspection plugs

Pos.	Description	M8	M10	3/4"
	Kit No	*96060537*	*96060538*	*96467951*
194	O-ring	12	12	12

Ranges 34 and 42

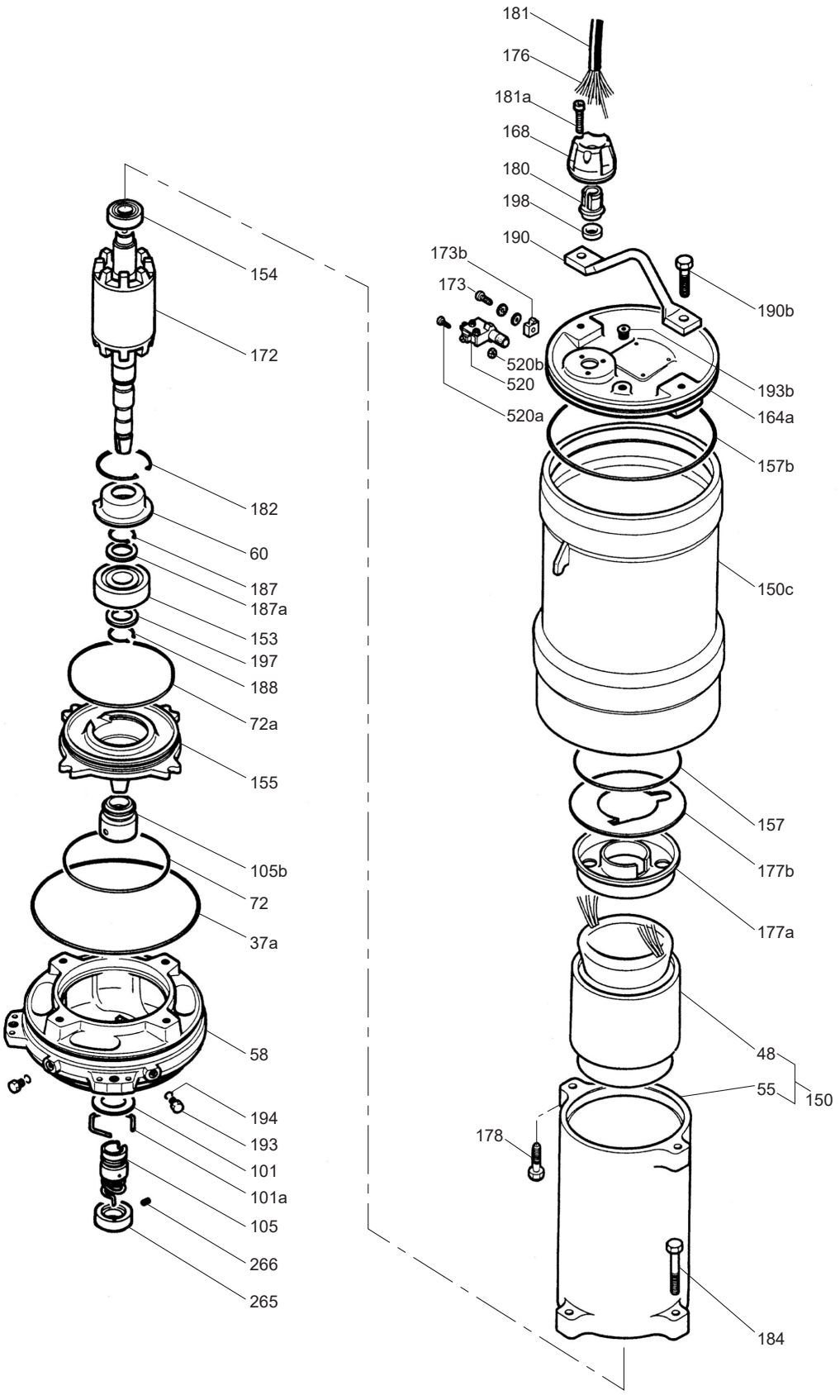

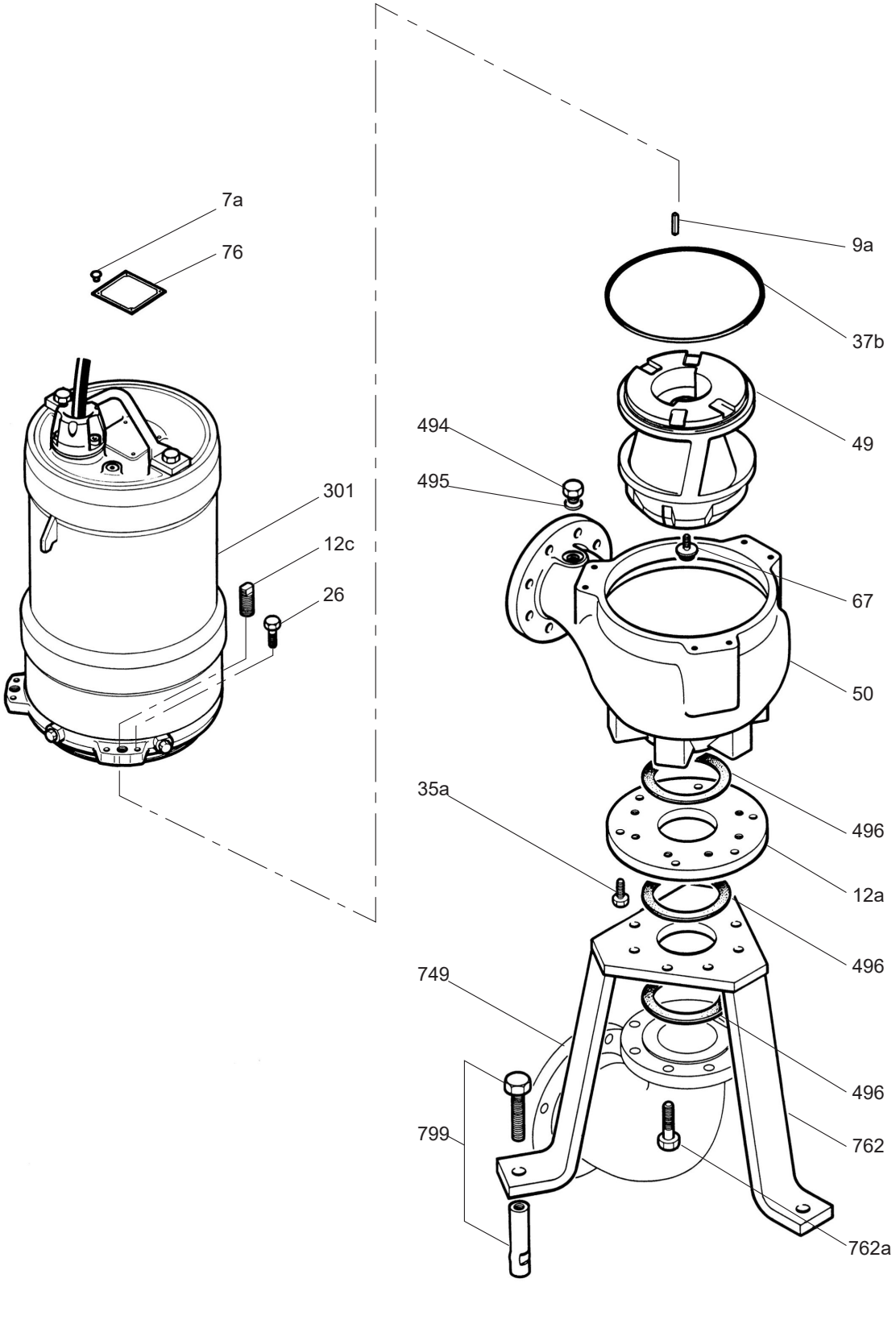
7a
76
301
12c
26
9a
37b
494
49
495
67
50
35a
496
12a
496
749
496
799
762
762a
TM069675

Range 46

50/60 Hz

Cable

Pos.	Description/Kit No	Cable length			
		10 m	15 m	25 m	50 m
181	9 x 1.5 mm^2	*96307963*	*96307964*	*96307965*	*96307966*
	7 x 6 + 2 x 2.5 mm^2	*96307971*	*96307972*	*96307973*	*96307974*

Cable inlet

Pos.	Cable type	7 x 6 mm^2 + 2 x 2.5 mm^2	9 x 1.5 mm^2
	Description/kit No	*96294858*	*95113752*
168	Cable entry	1	1
180	Cable clamp	1	1
181a	Screw	3	3
248a	Bolt	-	-

Cable inlet gasket

Pos.	Cable type	7 x 6 mm^2 + 2 x 2.5 mm^2	9 x 1.5 mm^2
	Description/Kit No	*96066567*	*96066568*
198	Rubber seal	1	1

Bearing

Pos.	Description/Kit No	*96494647*
153	Ball bearing	1
154	Ball bearing	1
197	Washer	1
188	Retaining ring	1

Moisture switch

Pos.	Description/kit No	*96256056*
520	Moisture switch	1
-	Adjusting gauge	1
-	Connector set (6 pcs)	1

Note: Two moisture switches are used for explosion-proof pumps.

O-ring

Pos.	Description/kit No		*96494640*
37b	O-ring	259.3 x 5.7	1
72	O-ring	239.3 x 5.7	1
72a	O-ring	208.3 x 5.7	1
157	O-ring	129.3 x 5.7	1
194	O-ring	8.3 x 2.4	3
495	O-ring	16.3 x 2.4	1
500	O-ring	64.5 x 3.0	3

O-ring for oil/inspection plugs

Pos.	Description/Kit No	M8	M10
		96060537	*96060538*
194	O-ring	12	12

Shaft seal

Pos.	Description/Kit No	*96567331*
105	Shaft seal	1

Range 46

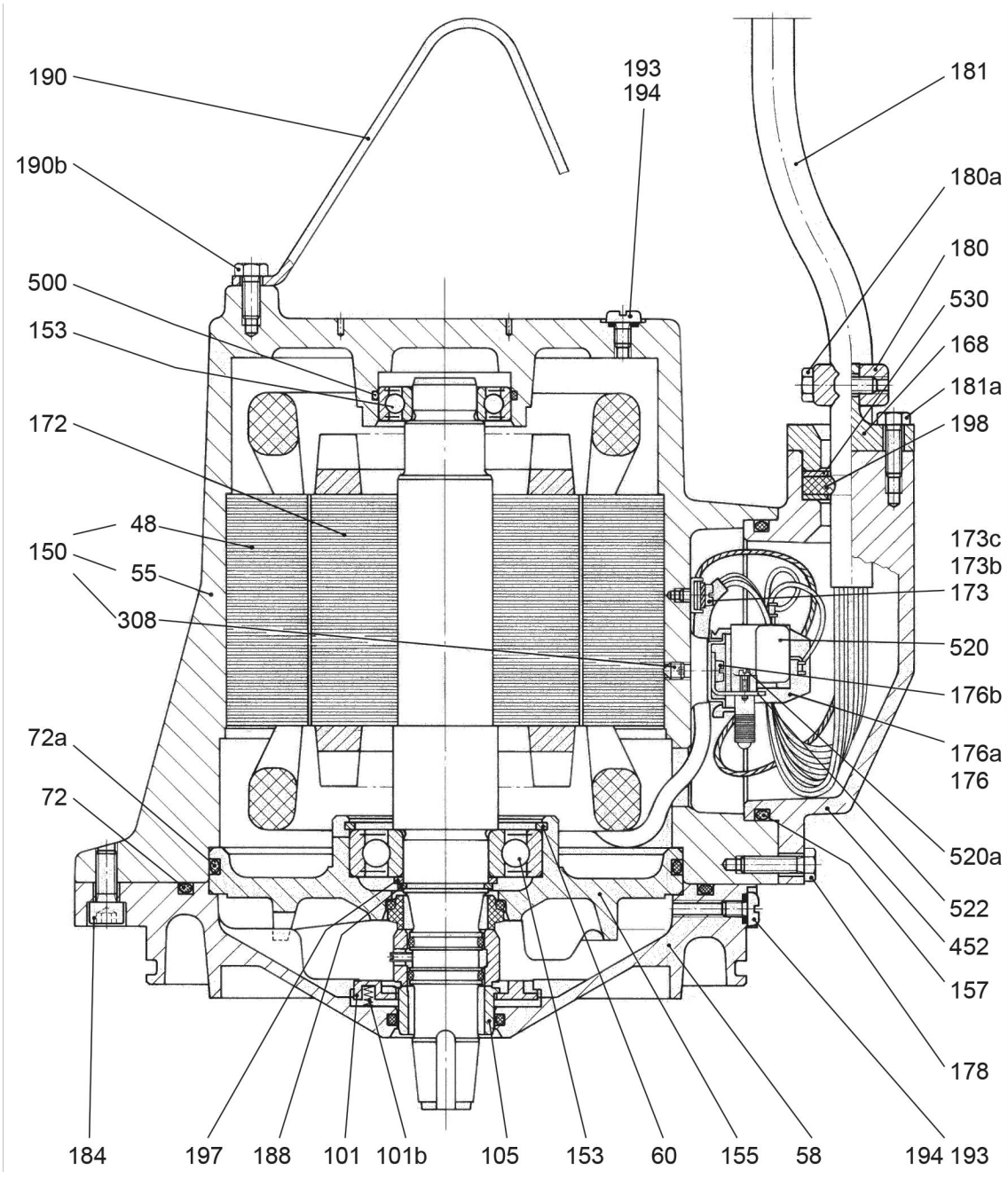
190
190b
500
153
172
48
150
55
308
72a
72
184
197
188
101
101b
105
153
60
155
58
194
193
193
194
181
180a
180
530
168
181a
198
173c
173b
173
520
176b
176a
176
520a
522
452
157
178
TM025957

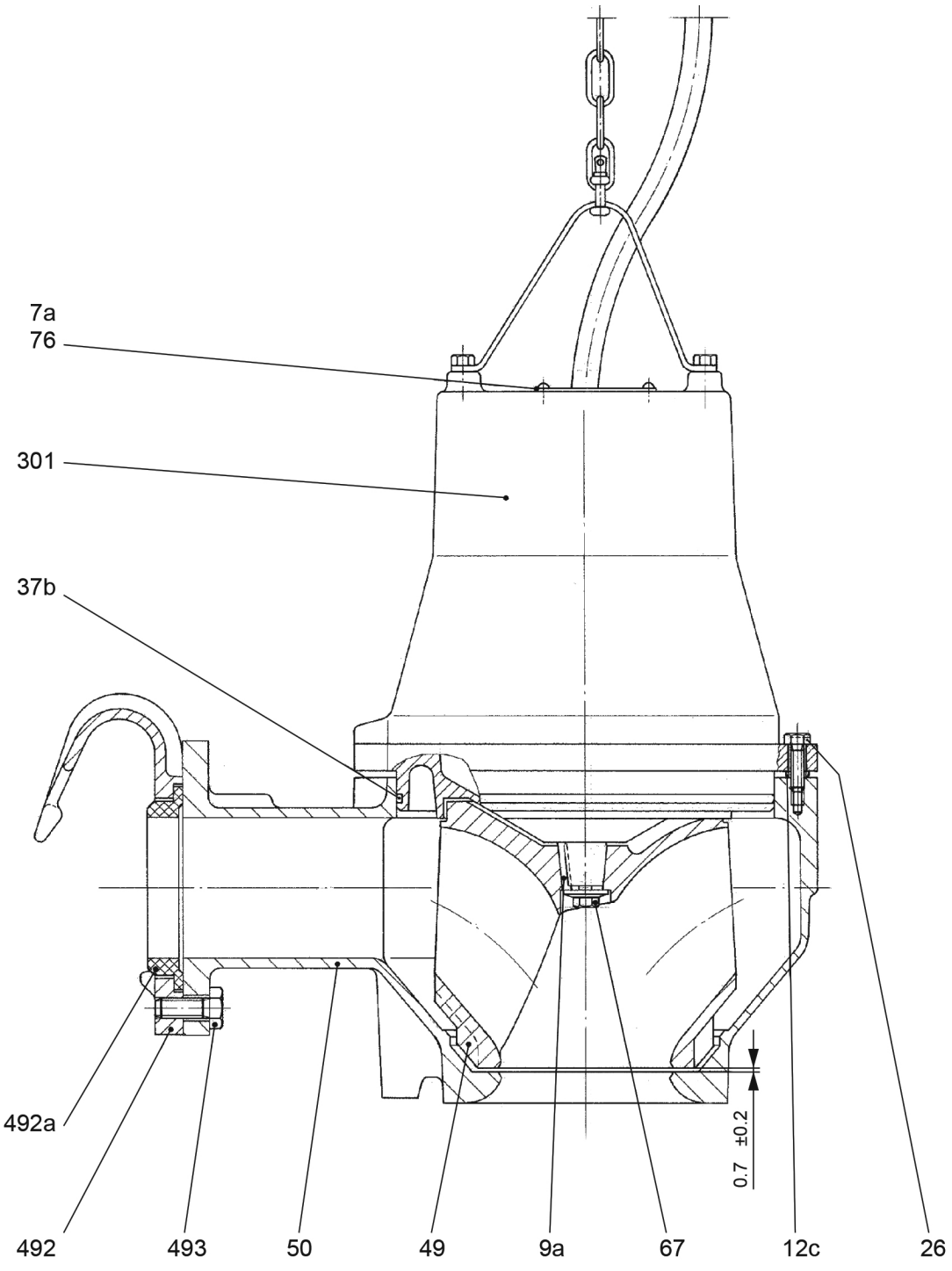
7a
76
301
37b
492a
492
493
50
49
9a
67
12c
26
0.7 ±0.2
TM025958

Ranges 50 and 54

Note: Pumps manufactured on 2008 can belong to an old or to a new generation, contact Grundfos for correct kit.

Cable

Pos.	Description	Range		Pumps manufactured 2008 and before				Pumps manufactured 2008 and after			
				Cable length				Cable length			
		50	54	10 m	15 m	25 m	50 m	10 m	15 m	25 m	50 m
181	7 x 1.5 mm²	•		-	-	-	-	*97513140*	*97513155*	*97513170*	*97513185*
	7 x 2.5 mm²	•		*96307959*	*96307960*	*96307961*	*96307962*	*97513143*	*97513158*	*97513173*	*97513188*
	9 x 1.5 mm²	•		*96307963*	*96307964*	*96307965*	*96307966*	-	-	-	-
	9 x 2.5 mm²	•	•	*96307967*	*96307968*	*96307969*	*96307970*	-	-	-	-
	4 x 6 mm²		•	-	-	-	-	*97513144*	*97513159*	*97513174*	*97513189*
	4 x 16 mm²		•	*96307983*	*96307984*	*96307985*	*96307986*	-	-	-	-
	5 x 10 mm²		•	*96307975*	*96307976*	*96307977*	*96307978*	-	-	-	-
	7 x 6 mm² + 2 x 2.5 mm²	•	•	*96307971*	*96307972*	*96307973*	*96307974*	-	-	-	-

Cable inlet - Range 50

Pos.	Production year	2008 and before				2008 and after					
	Pump type	Standard			Ex	Standard		Ex			
	Cable type	7 x 6 mm² + 2 x 2.5 mm²	9 x 1.5 mm²	9 x 2.5 mm²	7 x 2.5 mm²	7 x 1.5 mm²	7 x 2.5 mm²	7 x 1.5 mm² (cast iron)	7 x 1.5 mm² (EN 1.4408)	7 x 2.5 mm² (cast iron)	7 x 2.5 mm² (EN 1.4408)
	Description/kit No	*96294858*	*95113752*	*95113754*	*96294843*	*96842589*	*96842590*	*96842603*	*96842614*	*96842604*	*96842613*
168	Cable entry	1	1	1	2	1	1	1	1	1	1
180	Cable clamp	1	1	1	2	1	1	2	2	2	2
181a	Screw	3	3	3	6	3	3	3	3	3	3
248a	Bolt	-	-	-	-	-	-	2	2	2	2

Cable inlet - Range 54

Pos.	Production year	2008 and before		2008 and after			
	Pump type	Standard	Ex - U	Standard	Standard (EN 1.4408)	Ex	Ex (EN 1.4408)
	Cable type	7 x 6 mm² + 2 x 2.5 mm²	4 x 16 mm² 5 x 10 mm² 7 x 6 mm² + 2 x 2.5 mm²	4 x 6 mm²		4 x 6 mm²	
	Description/kit No	*96294858*	*96294843*	*96842591*	*96842600*	*96842605*	*96842615*
168	Cable entry	1	2	1	1	1	1
180	Cable clamp	1	2	1	1	2	2
181a	Screw	3	6	3	3	3	3
248a	Bolt	-	-	-	-	2	2

Cable inlet gasket - Range 50

Pos.	Production year	2008 and before						2008 and after	
	Pump type	Standard			Ex		Ex - U	Standard/Ex	
	Cable type	5 x 10 mm² 7 x 6 mm² + 2 x 2.5 mm²	9 x 1.5 mm²	9 x 2.5 mm²	4 x 16 mm² 5 x 10 mm² 7 x 6 mm² + 2 x 2.5 mm²	9 x 1.5 mm², 9 x 2.5 mm²	4 x 16 mm² 5 x 10 mm² 7 x 6 mm² + 2 x 2.5 mm²	7 x 1.5 mm²	7 x 2.5 mm²
	Description/kit No	*96294867*	*96294868*	*96294870*	*96294859*	*96294869*	*96294860*	*96842631*	*96842632*
198	Rubber seal	2	1	1	2	1	2	1	1

Cable inlet gasket - Range 54

Pos.	Production year	2008 and before		2008 and after
	Pump type	Standard	Ex	Standard / Ex
	Cable type	5 x 10 mm^2	4 x 16 mm^2	4 x 6 mm^2
		7 x 6 mm^2 + 2 x 2.5 mm^2	5 x 10 mm^2	
			7 x 6 mm^2 + 2 x 2.5 mm^2	
	Description/kit No	*96294867*	*96294859*	*96842633*
198	Rubber seal	2	2	1

Range 50 - Non-explosion-proof pump

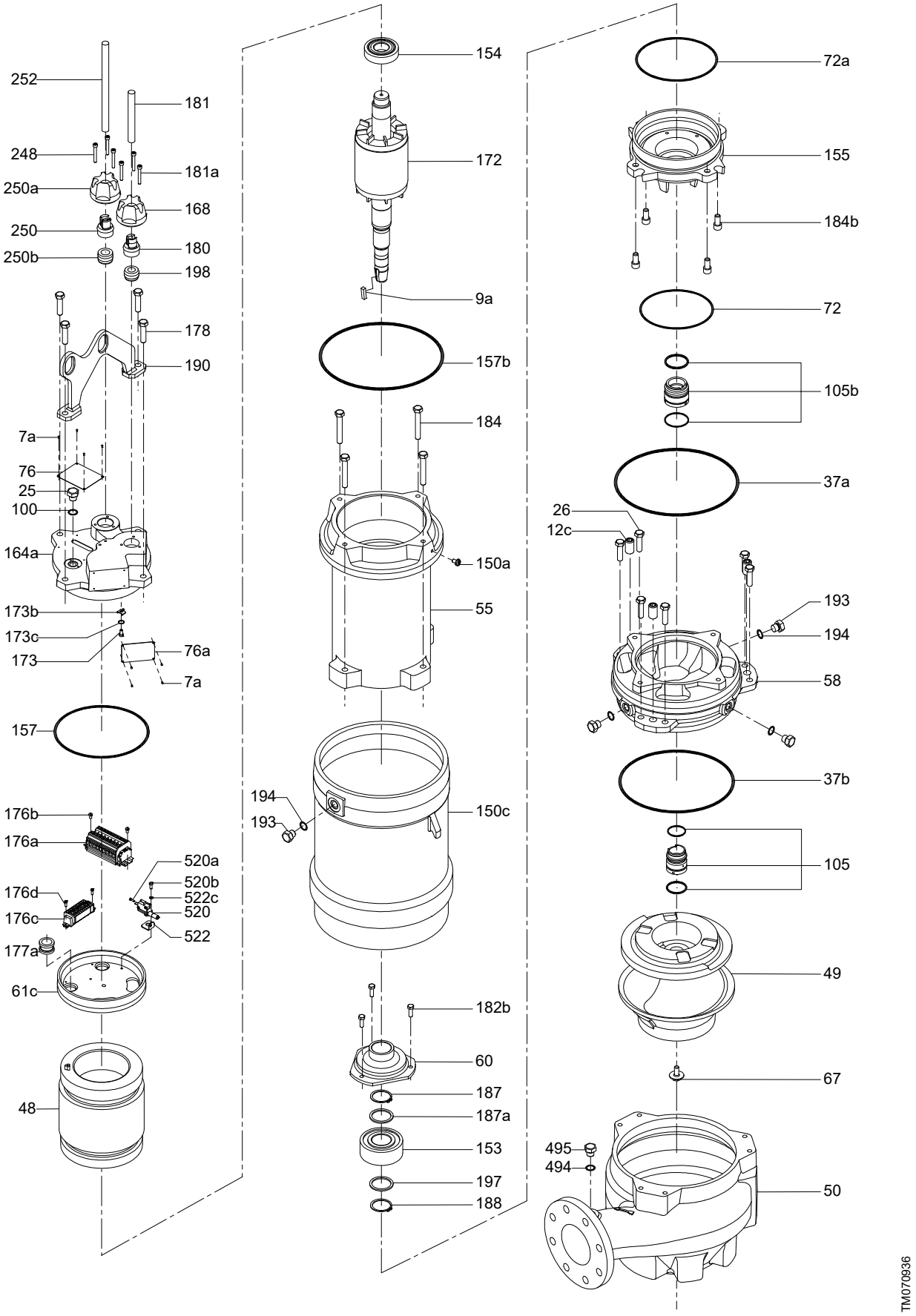

Range 54 - Non-explosion-proof pump

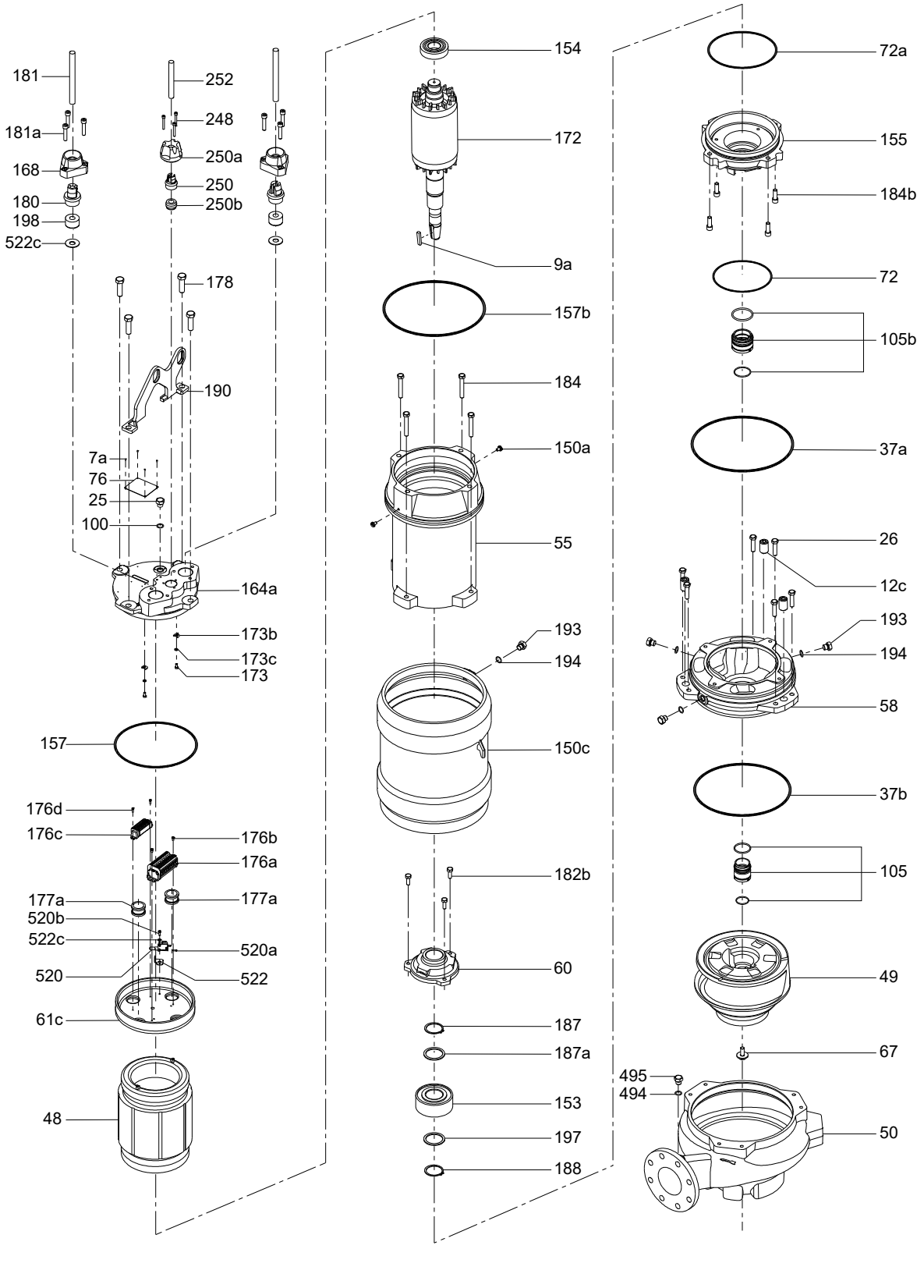

Ex approved cable entry

Manufactured 6.9.2017 and forward.

Pos.	Cable ID	36-1	36-2	46-1	46-2	46-3	46-4
	Description/Kit No	*99174565*	*99174566*	*99174567*	*99174568*	*99174569*	*99174570*
7a	Rivet	2	2	2	2	2	2
76b	Approval plate	1	1	1	1	1	1
168	Cable entry	1	1	1	1	1	1
180	Cable clamp	2	2	1	1	1	1
180a	Bolt	2	2	-	-	-	-
	Screw	-	-	2	2	2	2
181a	Screw	3	3	3	3	3	3
185	Washer	1	1	-	2	3	5
198	Rubber seal	1	1	1	1	1	1

Bearing

Pos.	Range	50	54
	Description/Kit No	*96494648*	*96294836*
153	Angular bearing	1	1
154	Ball bearing	1	1
182	Circlip [1)]	-	1
187	Circlip	1	1
187a	Washer	1	1
188	Circlip	-	1
197	Washer	-	1

1) For pumps manufactured 2004 and before.

Moisture switch

Pos.	Description/kit No	*96256056*
520	Moisture switch	1
-	Adjusting gauge	1
-	Connector set (6 pcs)	1

Note: Two moisture switches are used for explosion-proof pumps.

Water-in-oil sensor

Description/kit No		*96294840*	*96295122*	*96294841*
Water-in-oil sensor	10 m	1	-	-
	25 m	-	1	-
	50 m	-	-	1
Cable entry		1	1	1
Rubber seal		1	1	1
Right-angle connector		1	1	1
Protective hose (8 m)		1	1	1
Fixing piece		2	2	2
Band		5	5	5
Band lock		2	2	2
O-ring 16.3 x 2.4		1	1	1
Glue (shrinkable)		1	1	1

Water-in-oil sensor seal

Description/kit No	*96294839*
Rubber seal	1

Primary shaft seal

Pos.	Production year	2008 and after	
	Range	50	54
	Description	*96567348*	*96567350*
105	Primary shaft seal	1	1

Secondary shaft seal

Pos.	Production year	2008 and after	
	Range	50	54
	Description/Kit No	*96567338*	*96567341*
105b	Secondary shaft seal	1	1

O-rings for oil/inspection plugs

Pos.	Description/Kit No		*96467951*
194	O-ring	16.3 x 2.4	6

O-ring (pump and motor)

Pos.	Range		50	54
	Description/kit No		*96494641*	*96294837*
37a	O-ring	279.3 x 5.7	1	-
		309.3 x 5.7	-	1
37b	O-ring	269.3 x 5.7	1	-
		309.3 x 5.7	-	1
72	O-ring	184.3 x 5.7	1	-
		219.3 x 5.7	-	1
72a	O-ring	194.3 x 5.7	1	-
		229.3 x 5.7	-	1
100	O-ring	16.3 x 2.4	-	1
157	O-ring	194.3 x 5.7	1	-
		229.3 x 5.7	-	1
		249.3 x 5.7	-	1
157b	O-ring	279.3 x 5.7	1	-
		299.3 x 5.7	-	1
165	O-ring	149.3 x 5.7	-	1
194	O-ring	16.3 x 2.4	3	3
495	O-ring	16.3 x 2.4	1	1
194	O-ring	10.3 x 2.4	1	1
-	O-ring	10.1 x 1.6	1	-

Primary shaft seal

Pos.	Range	50	54
	Description	*96567348*	*96567350*
105	Primary shaft seal	1	1

Secondary shaft seal

Pos.	Range	50	54
	Description/Kit No	*96567338*	*96567341*
105b	Secondary shaft seal	1	1

Lifting bracket - Range 50

Pos.	Material	Galvanized steel	Stainless steel
	Description/kit No	*96841674*	*96841675*
190	Lifting bracket	1	1
190b	Screw	4	4

Lifting bracket - Range 54

Pos.	Material	Galvanized steel	Stainless steel
	Description/kit No	*96841580*	*96838471*
190	Lifting bracket	1	1
190b	Screw	4	4

Range 50 - Explosion-proof pump

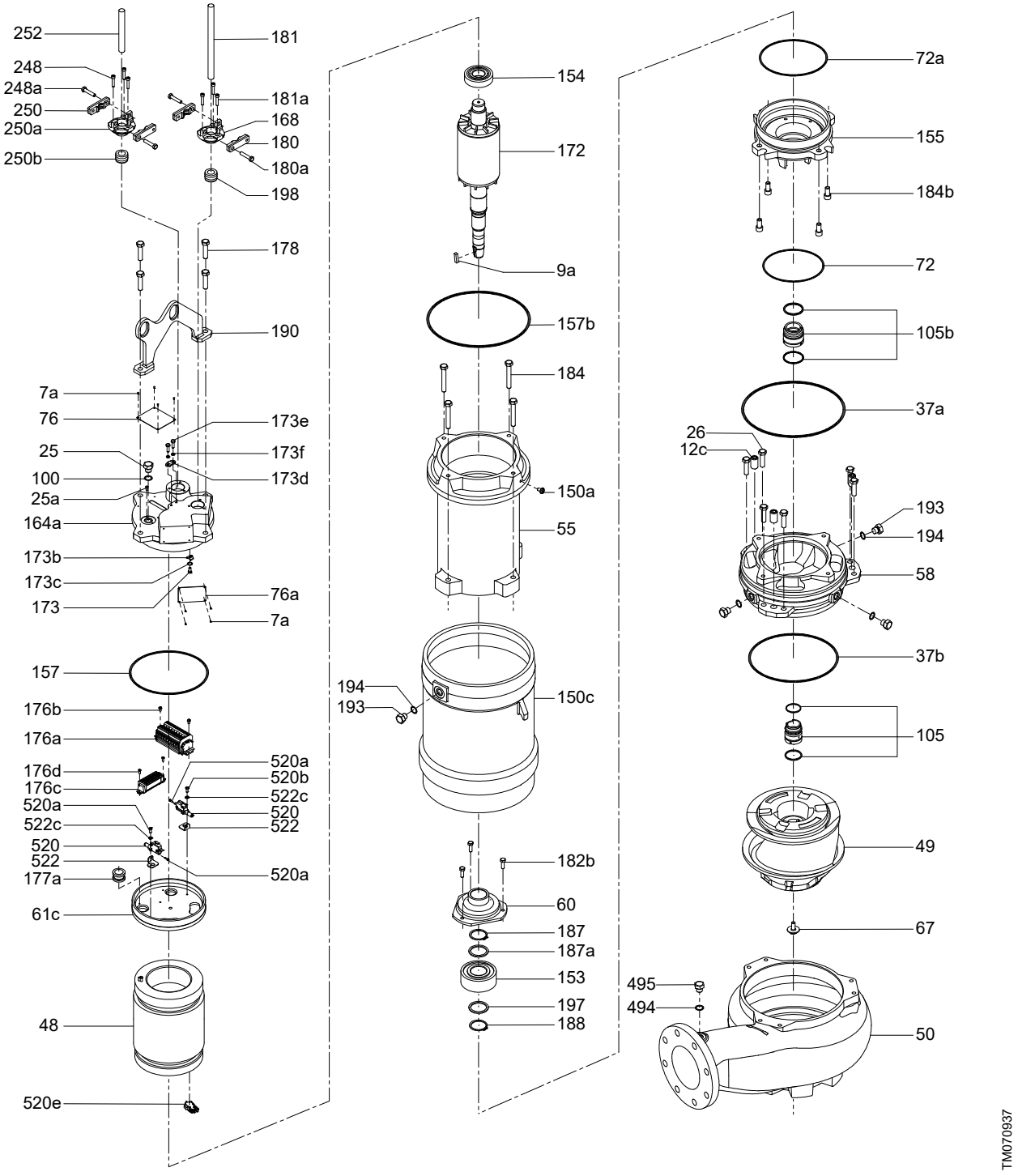

Range 54 - Explosion-proof pump

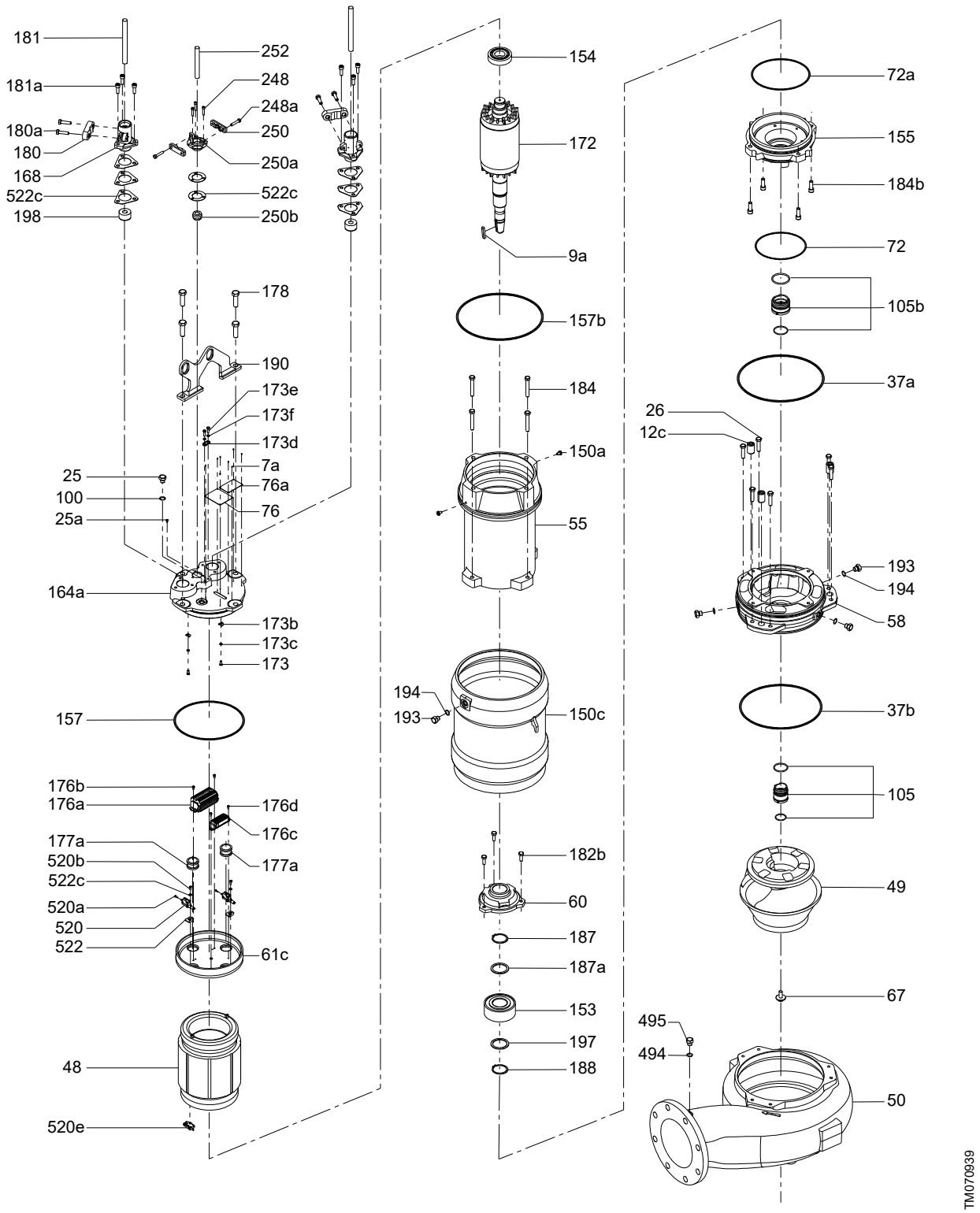

Ranges 58 and 62

Note: Pumps manufactured on 2008 can belong to an old or a new generation, contact Grundfos for correct kit.

Cable

Pos.	Description	Range		Pumps manufactured 2008 and before				Pumps manufactured 2008 and after [2]			
				Cable length				Cable length			
		58	62	10 m (33 ft)	15 m (50 ft)	25 m (82 ft)	50 m (165 ft)	10 m (33 ft)	15 m (50 ft)	25 m (82 ft)	50 m (165 ft)
181	4 x 6 mm^2	•		-	-	-	-	*97513145*	*97513160*	*97513175*	*97513190*
	4 x 10 mm^2		•					*97513147*	*97513162*	*97513177*	*97513192*
	4 x 16 mm^2		•	*96307983*	*96307984*	*96307985*	*96307986*	*97513149*	*97513164*	*97513179*	*97513194*

2) Cable comes with factory fitted cable ends (cable shoes).

Cable inlet - Range 58

Pos.	Production year	2008 and before		2008 and after					
	Pump type	Standard	Ex	Standard pumps			Ex pumps		
	Cable type	7 x 6 mm^2 + 2 x 2.5 mm^2	7 x 6 mm^2 + 2 x 2.5 mm^2	4 x 6 mm^2	4 x 10 mm^2	4 x 16 mm^2	4 x 6 mm^2	4 x 10 mm^2	4 x 16 mm^2
	Description/kit No	*96294857*	*96294843*	*96842591*	*96842592*	*96842593*	*96842605*	*96842606*	*96842607*
26	Screw (M10 x 40)	-	-	-	-	-	2	2	2
168	Cable entry	2	2	1	1	1	1	1	1
181a	Screw (M6 x 25)	8	6	3	3	3	3	3	3
180	Cable clamp	4	2	1	1	1	1	1	1
180a	Screw (M8 x 35)	4	-	-	-	-	-	-	-
750	Lock nut	4	-	-	-	-	-	-	-
751	Washer	4	-	-	-	-	-	-	-
752	Screw (M6 x 30)	4	-	-	-	-	-	-	-

Cable inlet - Range 62

Pos.	Production year	2008 and before		2008 and after					
	Pump type	Standard	Ex	Standard pumps			Ex pumps		
	Cable type	4 x 16 mm^2	4 x 16 mm^2	4 x 6 mm^2	4 x 10 mm^2	4 x 16 mm^2	4 x 6 mm^2	4 x 10 mm^2	4 x 16 mm^2
	Description/kit No	*96294842*	*96294843*	*96842591*	*96842592*	*96842593*	*96842605*	*96842606*	*96842607*
26	Screw (M10 x 40)			-	-	-	2	2	2
168	Cable entry	2	2	1	1	1	1	1	1
181a	Screw	6	6	3	3	3	3	3	3
180	Cable clamp	2	2	1	1	1	1	1	1

Cable inlet gasket- Range 58

Pos.	Production year	2008 or before		2008 and after
	Pump type	Standard	Ex	Standard / Ex
	Cable type	5 x 10 mm^2	5 x 10 mm^2	4 x 6 mm^2
	Description/kit No	*96294867*	*96294859*	*96842633*
198	Rubber seal	2	2	1

Cable inlet gasket - Range 62

Pos.	Production year	2008 or before		2008 and after		
	Pump type	Standard	Ex	Standard / Ex		
	Cable type	5 x 10 mm^2	7 x 6 mm^2 + 2 x 2.5 mm^2	4 x 6 mm^2	4 x 10mm^2	4 x 16 mm^2
	Description/kit No	*96294861*	*96294859*	*96842633*	*96842634*	*96842635*
198	Rubber seal	2	2	1	1	1

Range 58 - Non-explosion-proof pump

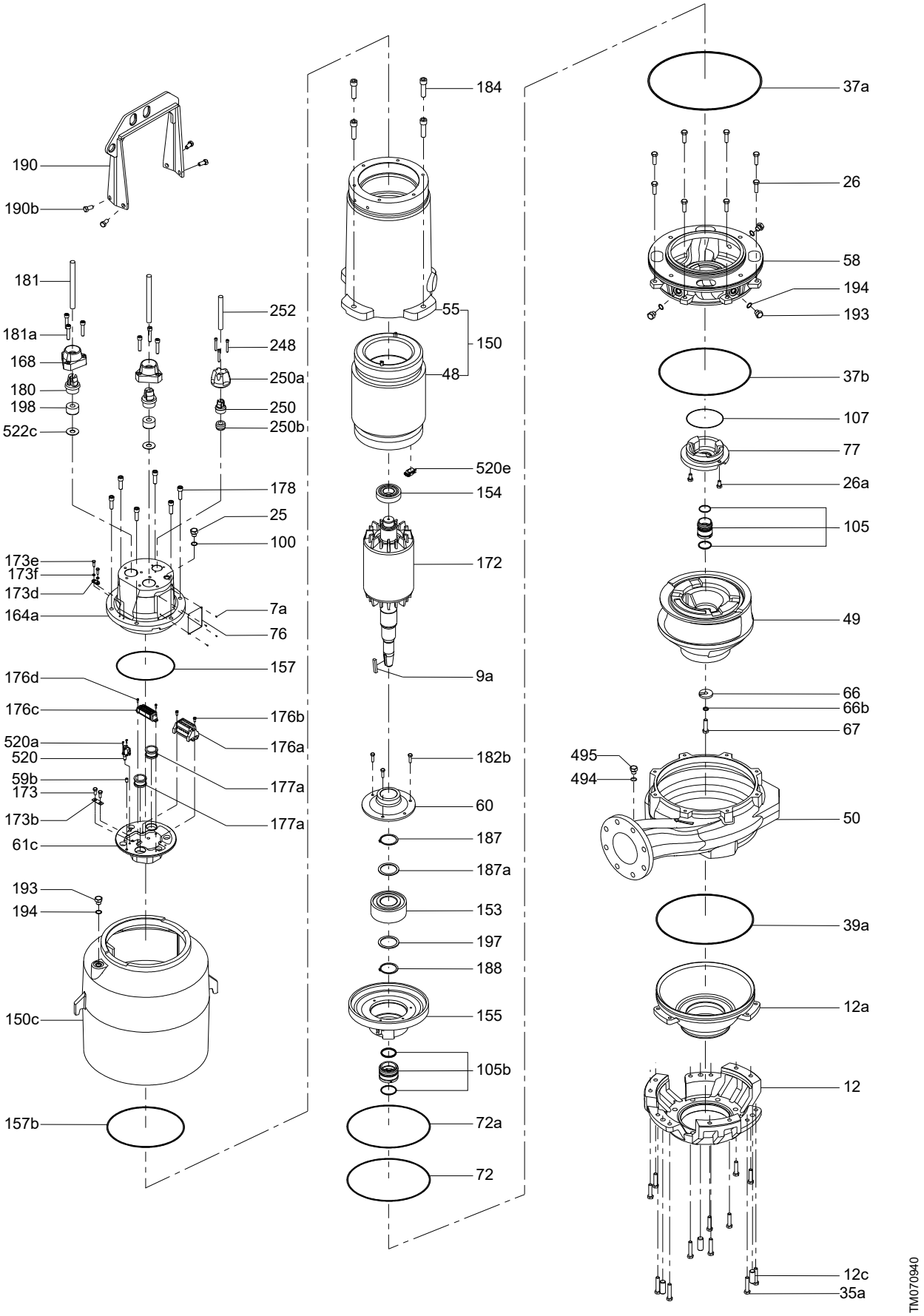

Range 62- Non-explosion-proof pump

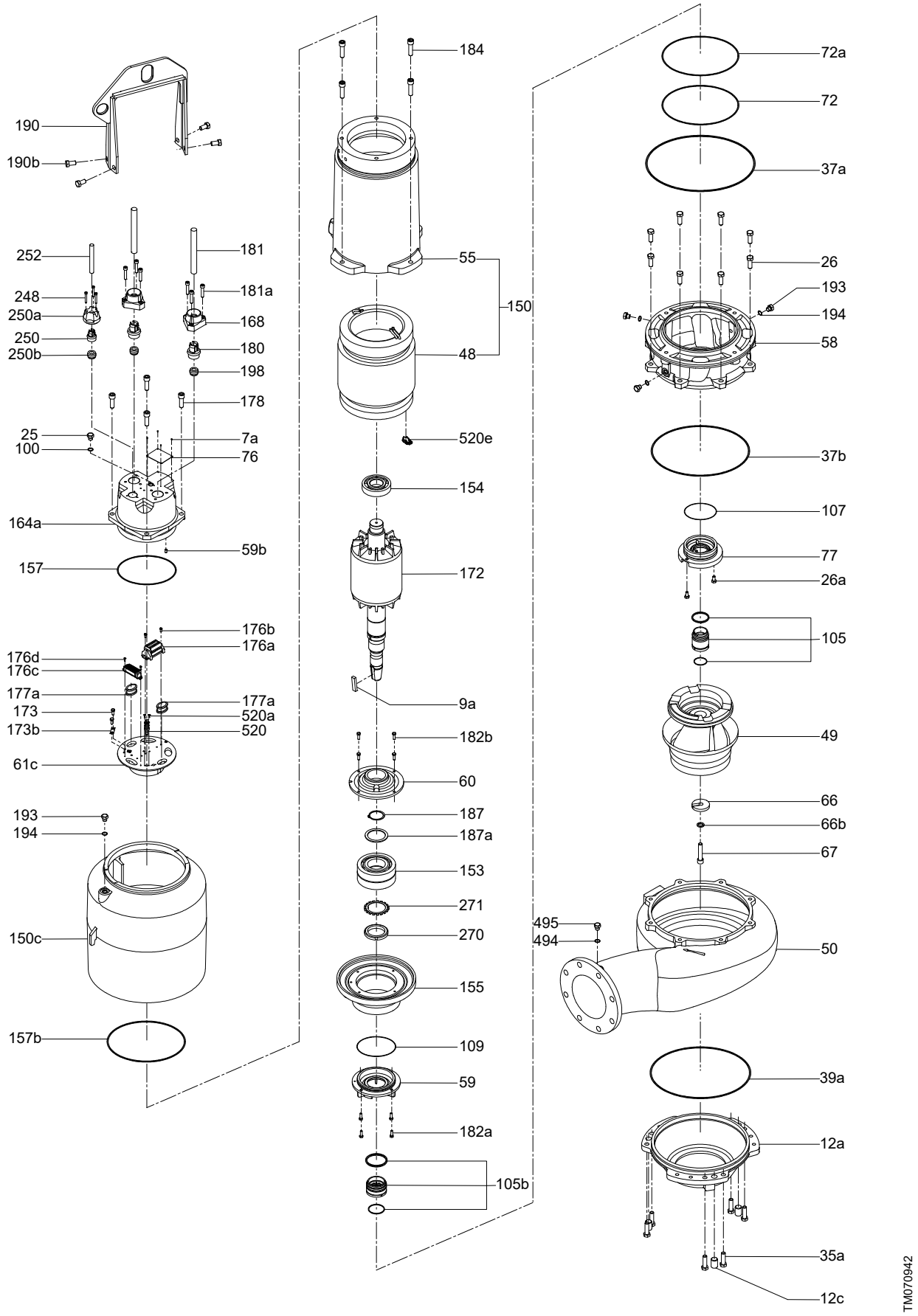

Control cable

Pos.	Production year	2008 and before				2008 and after			
	Description	Cable length				Cable length			
		10 m (33 ft)	15 m (50 ft)	25 m (82 ft)	50 m (165 ft)	10 m (33 ft)	15 m (50 ft)	25 m (82 ft)	50 m (165 ft)
252	7 x 1.5 mm^2	*96307955*	*96307956*	*96307957*	*96307958*	*97513142*	*97513157*	*97513172*	*97513187*

Control cable inlet

Pos.	Pump type	Standard	Ex
	Cable type	7 x 1.5 mm^2	
	Description/kit No	*96842589*	*96842603*
248	Screw (M6 x 45)	3	2
248a	Bolt (M8 x 40)	-	2
250	Cable clamp	1	2
250a	Cable entry	1	1

Control cable inlet gasket

Bearing

Pos.	Description	Kit No
250b	Rubber seal	*95114127*

Pos.	Range	58	62
	Description/kit No	*96294833*	*96294830*
153	Ball bearing (lower)	1	2
154	Ball bearing (upper)	1	1
187	Circlip	1	1
187a	Washer	1	1
188	Circlip	1	-
197	Washer*	1	-
270	Nut	-	1
271	Lock washer	-	1

Moisture switch

Pos.	Description/kit No	*96256056*
520	Moisture switch	1
-	Adjusting gauge	1
-	Connector set (6 pcs)	1

Note: Two moisture switches are used for explosion-proof pumps.

Water-in-oil sensor

Description/kit No		*96294840*	*96295122*	*96294841*
Water-in-oil sensor	10 m	1	-	-
	25 m	-	1	-
	50 m	-	-	1
Cable entry		1	1	1
Rubber seal		1	1	1
Right-angle connector		1	1	1
Protective hose (8 m)		1	1	1
Fixing piece		2	2	2
Band		5	5	5
Band lock		2	2	2
O-ring 16.3 x 2.4		1	1	1
Glue (shrinkable)		1	1	1

Lifting bracket

Pos.	Range	58	62
	Description/kit No	*99466458*	*99466459*
190	Lifting bracket	1	1
190b	Screw	4	4
190e	Plug	1	1

Water-in-oil sensor seal

Description/kit No	*96294839*
Rubber seal	1

O-ring, motors

Pos.	Range		58	62
	Description/kit No		*96294834*	*96294831*
37a	O-ring	399.3 x 5.7	1	-
		439.3 x 5.7	-	1
72	O-ring	279.3 x 5.7	1	-
		309.3 x 5.7	-	1
72a	O-ring	279.3 x 5.7	1	-
		319.3 x 5.7	-	1
100	O-ring	16.3 x 2.4	1	1
107	O-ring	124.3 x 5.7	1	-
		129.3 x 5.7	-	1
109	O-ring	149.3 x 5.7	-	1
157	O-ring	209.3 x 5.7	1	-
		229.3 x 5.7	-	1
157b	O-ring	279.3 x 5.7	1	-
		299.3 x 5.7	-	1
194	O-ring	16.3 x 2.4	4	4

O-ring, pumps

Pos.	Range		58	62
	Description/kit No		*96294835*	*96294832*
37	O-ring	439.3 x 5.7	-	1
37b	O-ring	339.3 x 5.7	1	1
		389.3 x 5.7	-	1
		399.3 x 5.7	-	1
37d	O-ring	499.3 x 5.7	-	1
39	O-ring	169.3 x 5.7	1	1
		209.3 x 5.7	1	-
		239.3 x 5.7	1	-
		249.3 x 5.7	-	1
		269.3 x 5.7	1	1
		299.3 x 5.7	-	1
		319.3 x 5.7	-	1
		309.3 x 5.7	-	1
39a	O-ring	339.3 x 5.7	1	-
		389.3 x 5.7	-	1
		399.3 x 5.7	-	1
		439.3 x 5.7	-	1
194	O-ring	16.3 x 2.4	1	1

Secondary shaft seal

Pos.	Production year	2008 and before	
	Range	58	62
	Description	Kit No	Kit No
105b	Secondary shaft seal	*96567341*	*96567343*

Primary shaft seal

Pos.	Production year	2008 and before	
	Range	58	62
	Description	Kit No	Kit No
105	Primary shaft seal	*96567350*	*96567355*

Range 58 - Explosion-proof pump

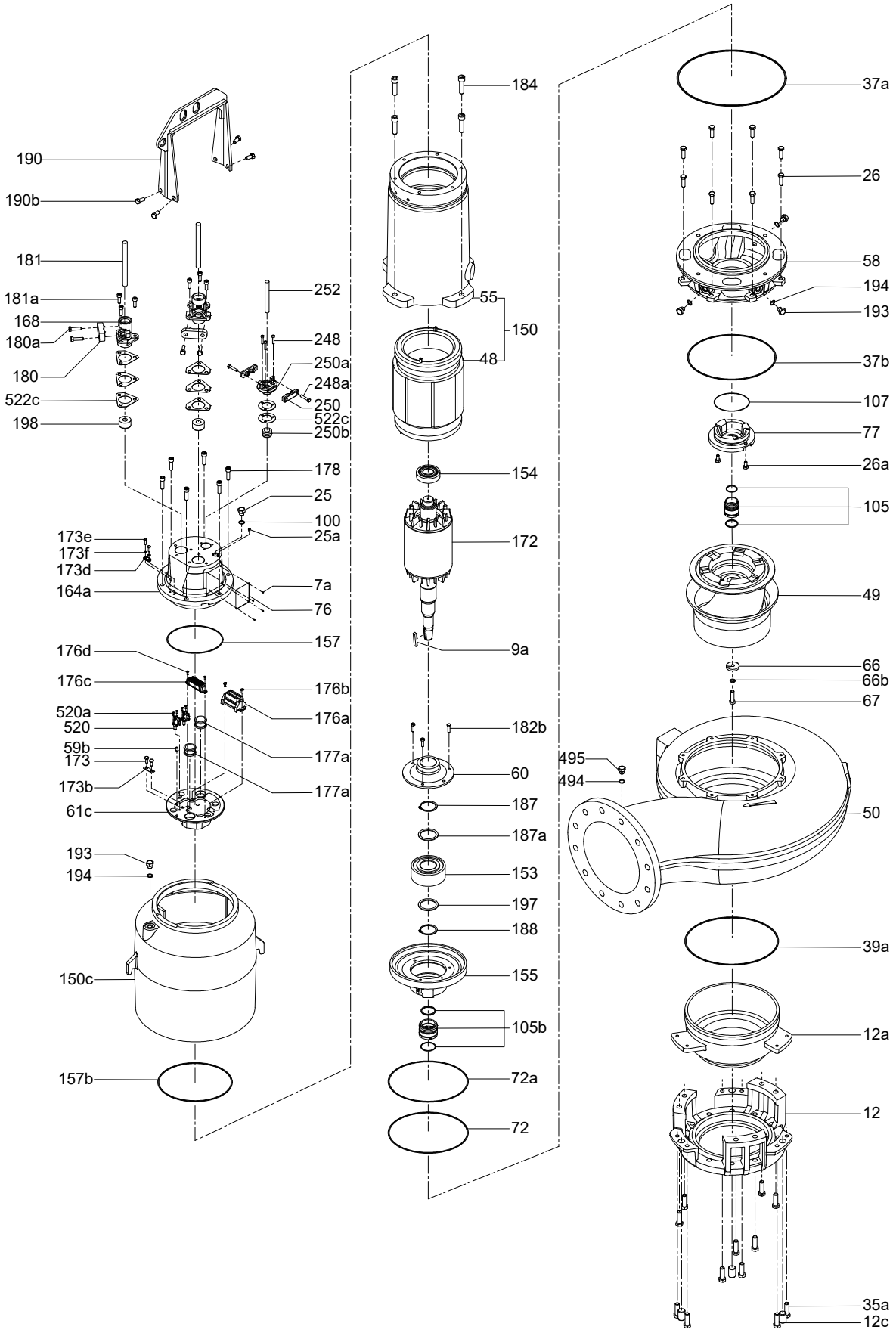

Range 62 - Explosion-proof pump

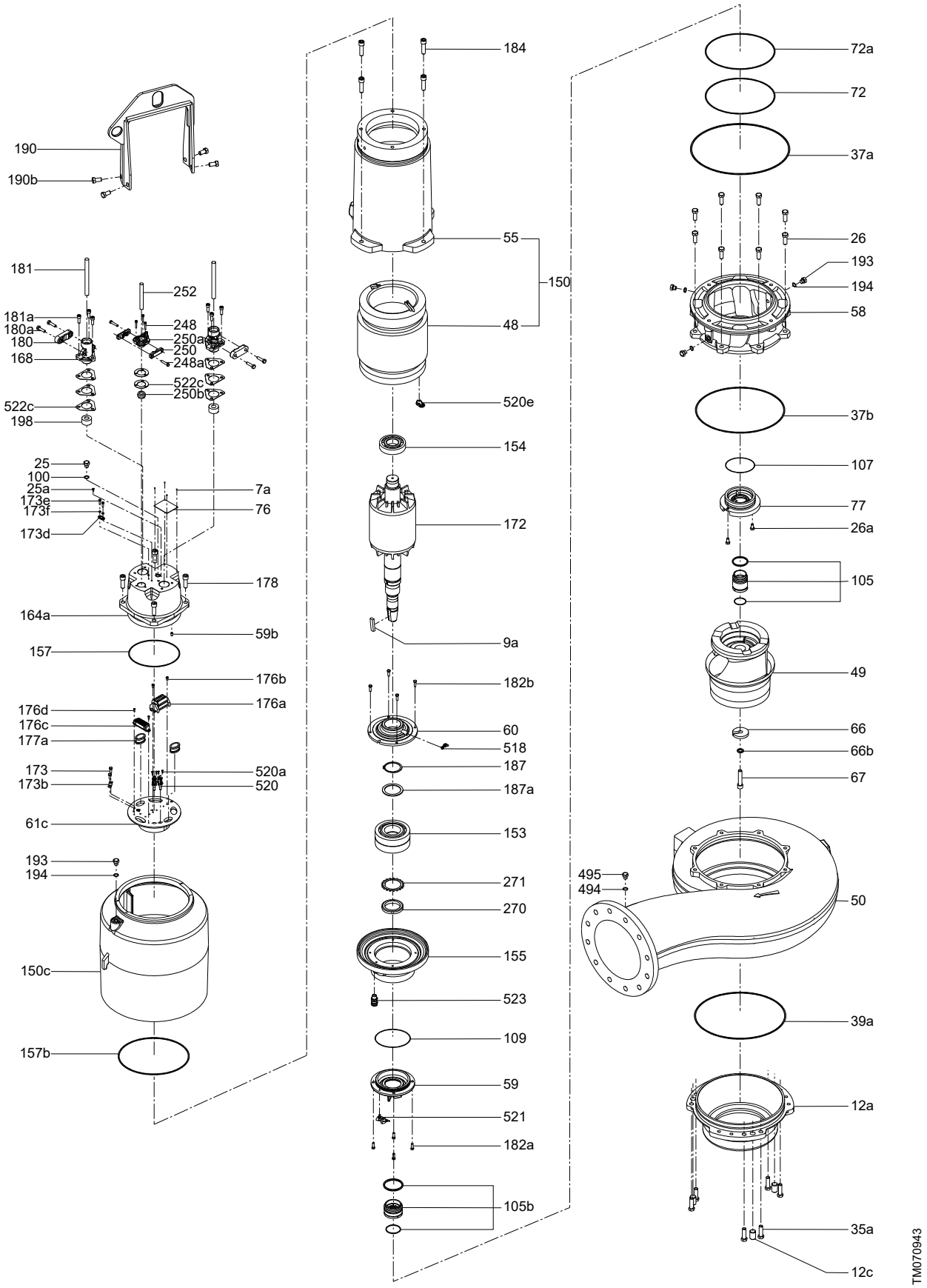

Ranges 66 and 70

Note: Pumps manufactured on 2008 can belong to an old or a new generation, contact Grundfos for correct kit.

Cable

Pos.	Description	Range		Pumps manufactured 2008 and before				Pumps manufactured 2008 and after [3]			
				Cable length				Cable length			
		66	70	10 m (33 ft)	15 m (50 ft)	25 m (82 ft)	50 m (165 ft)	10 m (33 ft)	15 m (50 ft)	25 m (82 ft)	50 m (165 ft)
181	4 x 10 mm²	•		-	-	-	-	*97513148*	*97513163*	*97513178*	*97513193*
	4 x 16 mm²	•		*96307983*	*97513165*	*96307985*	*96307986*	*97513150*	*97513165*	*97513180*	*97513195*
	4 x 25 mm²	•	•	*96307987*	*96307988*	*96307989*	*96307990*	*97913151*	*97513166*	*97513181*	*97513196*
	4 x 35 mm²		•	*96307991*	*96307992*	*96307993*	*96307994*	*97513152*	*97513167*	*97613182*	*97513197*
	4 x 50 mm²		•	*96307995*	*96307996*	*96307997*	*96307998*	*97513153*	*97513168*	*97513183*	*97513198*
	4 x 70 mm²		•	*96307999*	*96308000*	*96308001*	*96308002*	*97513154*	*97513169*	*97513184*	*97513199*

[3] Cable comes with factory fitted cable ends (cable shoes).

Power cable inlet - Range 66

Pos.	Pump type	Standard			Ex
	Cable type	4 x 10 mm²	4 x 16 mm²	4 x 25 mm²	4 x 25 mm²
	Description/Kit No	*96842592*	*96842593*	*96842594*	*96842608*
168	Cable entry	1	1	1	1
181a	Screw	3	3	3	3
180	Cable clamp	1	1	1	1
180a	Screw	-	-	2	2

Power cable inlet - Range 70

Pos.	Pump type	Standard				Ex			
	Cable type	4 x 25 mm²	4 x 35 mm²	4 x 50 mm²	4 x 70 mm²	4 x 25 mm²	4 x 35 mm²	4 x 50 mm²	4 x 70 mm²
	Description/Kit No	*96842594*	*96842595*	*96842596*	*96842597*	*96842608*	*96842609*	*96842596*	*96842597*
168	Cable entry	1	1	1	1	1	1	1	1
181a	Screw	3	3	3	3	3	3	3	3
180	Cable clamp	1	1	1	1	1	1	1	1
180a	Screw	2	2	2	2	2	2	2	2

Cable inlet, range 70

Pos.	Description/kit No								
	Standard pumps				Ex pumps				
	4 x 25 mm²	4 x 50 mm²	4 x 70 mm²	4 x 95 mm²	4 x 25 mm²	4 x 35 mm²	4 x 50 mm²	4 x 70 mm²	4 x 95 mm²
50 Hz	*96294844*	*96294844*	*96294853*	-	*96294846*	*96294848*	*96294851*	*96294854*	*96294856*
60 Hz				-	*96294847*	*96294849*	*96294852*	-	-
60 Hz - U				*96294855*	-	-	-	-	-

Content

Pos.	Description	Quantity
168	Cable entry	2
181a	Screw	6
180	Cable clamp	2

Ex approved cable entry

Manufactured 6.9.2017 and forward.

Pos.	Cable ID	36-1	36-2	46-1	46-2	46-3	46-4	65-1	65-2
	Description/Kit No	***99174565***	***99174566***	***99174567***	***99174568***	***99174569***	***99174570***	***99174571***	***99174572***
7a	Rivet	2	2	2	2	2	2	2	2
76b	Approval plate	1	1	1	1	1	1	1	1
168	Cable entry	1	1	1	1	1	1	1	1
180	Cable clamp	2	2	1	1	1	1	1	1
180a	Bolt	2	2	-	-	-	-	-	-
	Screw	-	-	2	2	2	2	2	2
181a	Screw	3	3	3	3	3	3	3	3
185	Washer	1	1	-	2	3	5	-	3
198	Rubber seal	1	1	1	1	1	1	1	1

Range 66- Non-explosion-proof pump

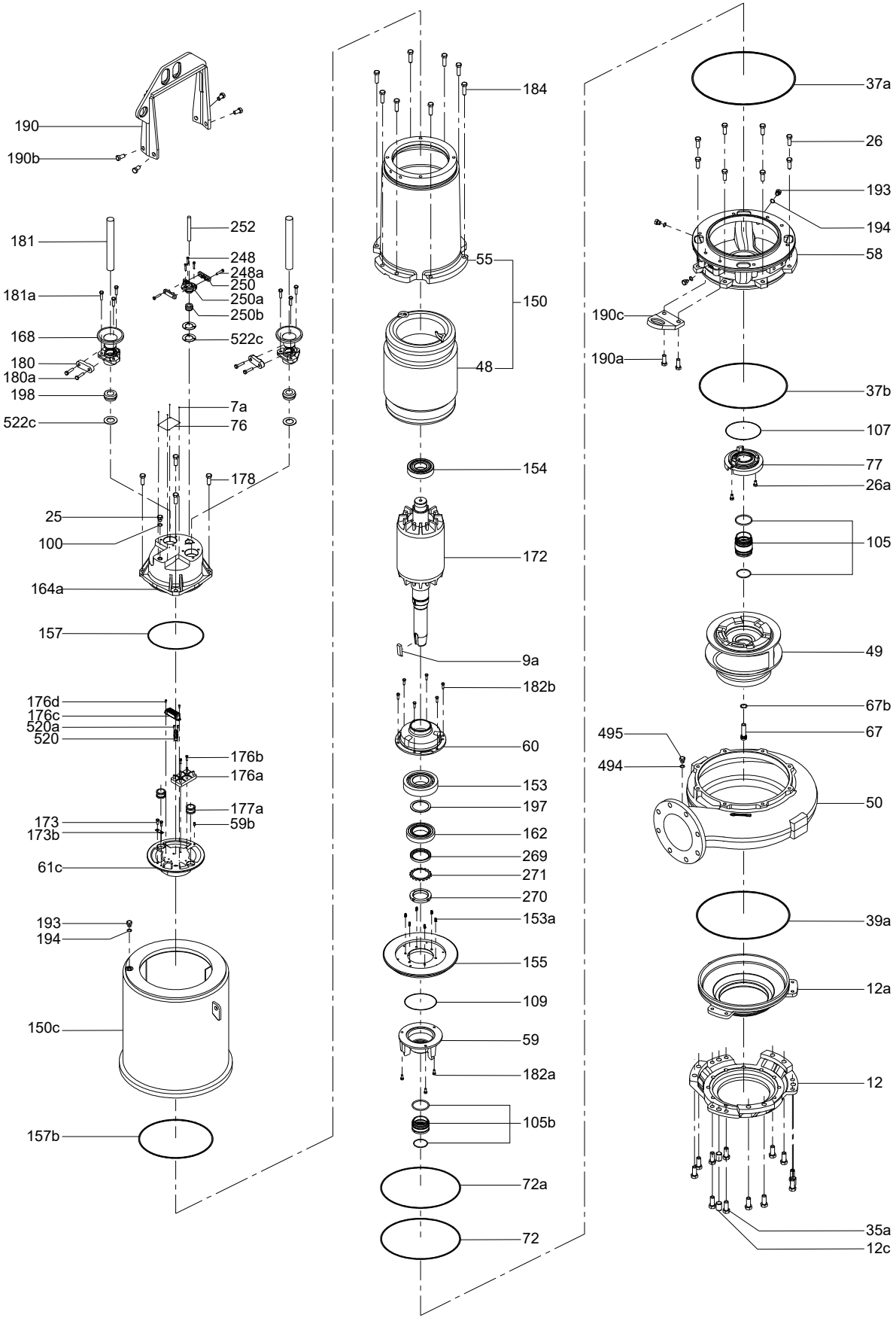

Range 70 - Non-explosion-proof pump

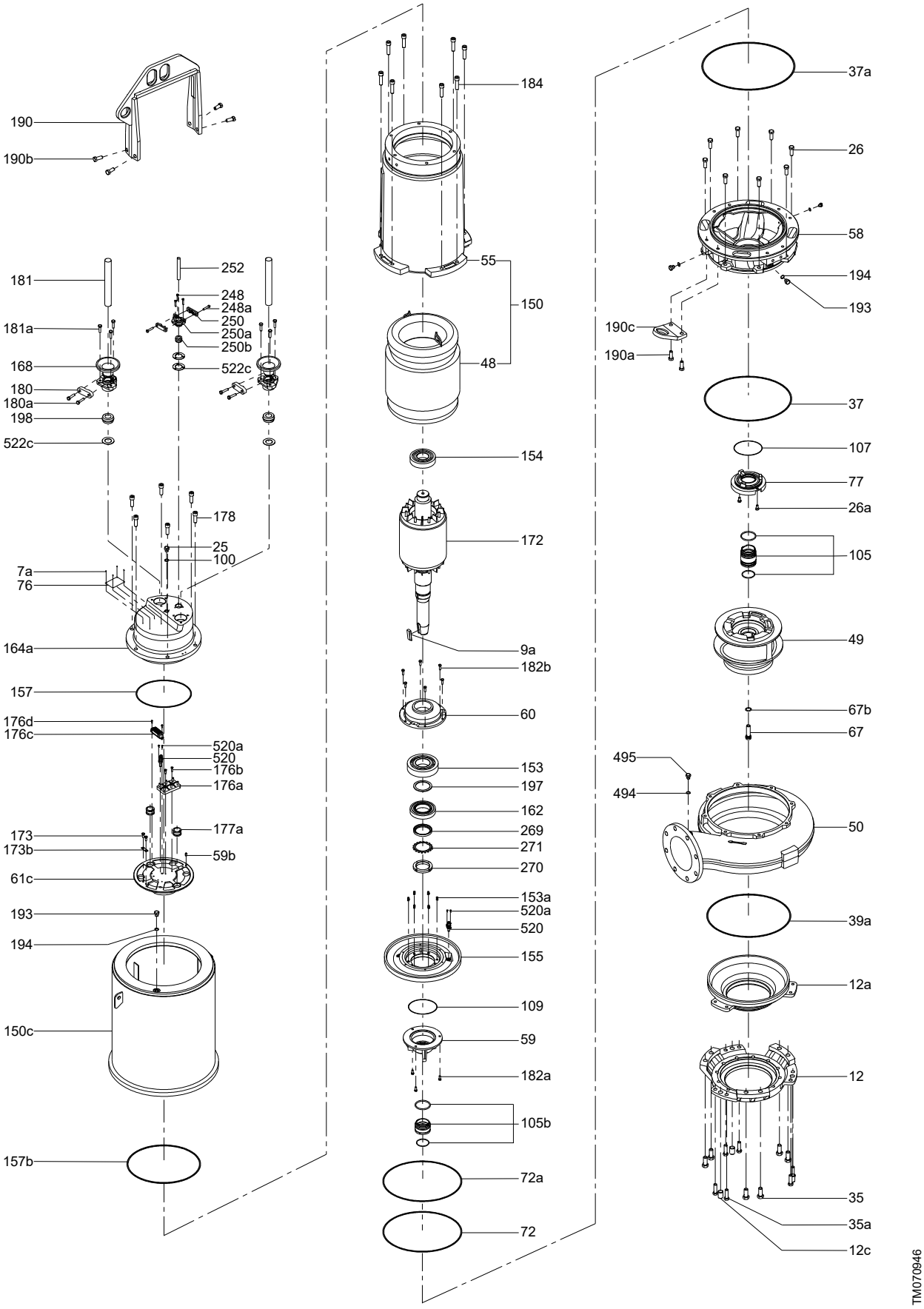

Cable inlet gasket - Range 66

Pos.	Pump type	Standard pumps			Ex	
	Cable type	4 x 10 mm²	4 x 16 mm²	4 x 25 mm²	4 x 25 mm²	4 x 35 mm²
	Description/kit No	96294861		96294862	96294863	96294864
198	Rubber seal	2	2	2	2	2

Cable inlet gasket - Range 70

Pos.	Pump type	Standard and Ex				
	Cable type	4 x 25 mm²	4 x 35 mm²	4 x 50 mm²	4 x 70 mm²	4 x 95 mm²
	Description/kit No	96294862	96294863	96294864	96294865	96294866
198	Rubber seal	2	2	2	2	2

Control cable

Pos.	Description	Pumps manufactured 2008 and before [4]				Pump manufactured 2008 and after [4]			
		Cable length				Cable length			
		10 m (33 ft)	15 m (50 ft)	25 m (82 ft)	50 m (165 ft)	10 m (33 ft)	15 m (50 ft)	25 m (82 ft)	50 m (165 ft)
252	3 x 2.5 mm² [4]	96308007	96308008	96308009	96308010	-	-	-	-
252	7 x 1.5 mm²	96307955	96307956	96307957	96307958	97513142	97513157	97513172	97513187

4) Pumps manufacture on 2008, contact Grundfos for correct kit.

Control cable inlet

Pos.	Pump type	Standard / FM	Ex
	Cable type	7 x 1.5 mm²	
	Description/Kit No	96842589	96842603
250	Cable clamp	1	2
250a	Cable entry	1	1
248	Screw	3	3
248a	Screw	-	1

Bearing

Pos.	Range	66	66 Ex / 70	70 [5]
	Description/kit No	96294827	96294823	96294824
153	Ball bearing (upper)	1	1	2
153a	Spring	6	6	6
154	Ball bearing (lower)	1	1	1
162	Roller bearing	1	1	1
197	Washer [6]	1	1	1
269	Angular ring [6]	1	1	1
270	Nut	1	1	1
271	Lock washer	1	1	1

5) For following 50 Hz standard and Ex pumps:
- 115 kW 4-pole S hydraulics
- 130 kW 6-pole H, L, M, E hydraulics
- 160 kW 4-pole H, L, M, S hydraulics.

6) For pumps manufactured 2004 and before.

Moisture switch

Pos.	Description/kit No	96256056
520	Moisture switch	1
-	Adjusting gauge	1
-	Connector set (6 pcs)	1

Note: Two moisture switches are used for explosion-proof pumps.

Water-in-oil sensor

Description/kit No		96294840	96295122	96294841
Water-in-oil sensor	10 m	1	-	-
	25 m	-	1	-
	50 m	-	-	1
Cable entry		1	1	1
Rubber seal		1	1	1
Right-angle connector		1	1	1
Protective hose (8 m)		1	1	1
Fixing piece		2	2	2
Band		5	5	5
Band lock		2	2	2
O-ring 16.3 x 2.4		1	1	1
Glue (shrinkable)		1	1	1

Water-in-oil sensor seal

Description/kit No	96294839
Rubber seal	1

Primary shaft seal

Pos.	Production year	2008 and before		
	Range	66	70	70
	Interchangeability	-, A, B	A, B	-
	Description/Kit No	96567358	96567358	96567358
105	Primary shaft seal	1	1	1
62	O-ring 74.5 x 3.0	1	1	1

Pos.	Production year	2008 and after
	Range	66 / 70
	Description/Kit No	96844618
105	Primary shaft seal	1

Secondary shaft seal

Pos.	Production year	2008 and before	
	Range	66	70
	Interchangeability	-, A, B	A, B
	Description/Kit No	96567343	96567343
105b	Secondary shaft seal	1	1

Pos.	Production year	2008 and after
	Range	66 / 70
	Description/Kit No	96567343
105b	Secondary shaft seal	1

Range 66 and 70 - Explosion proof pump

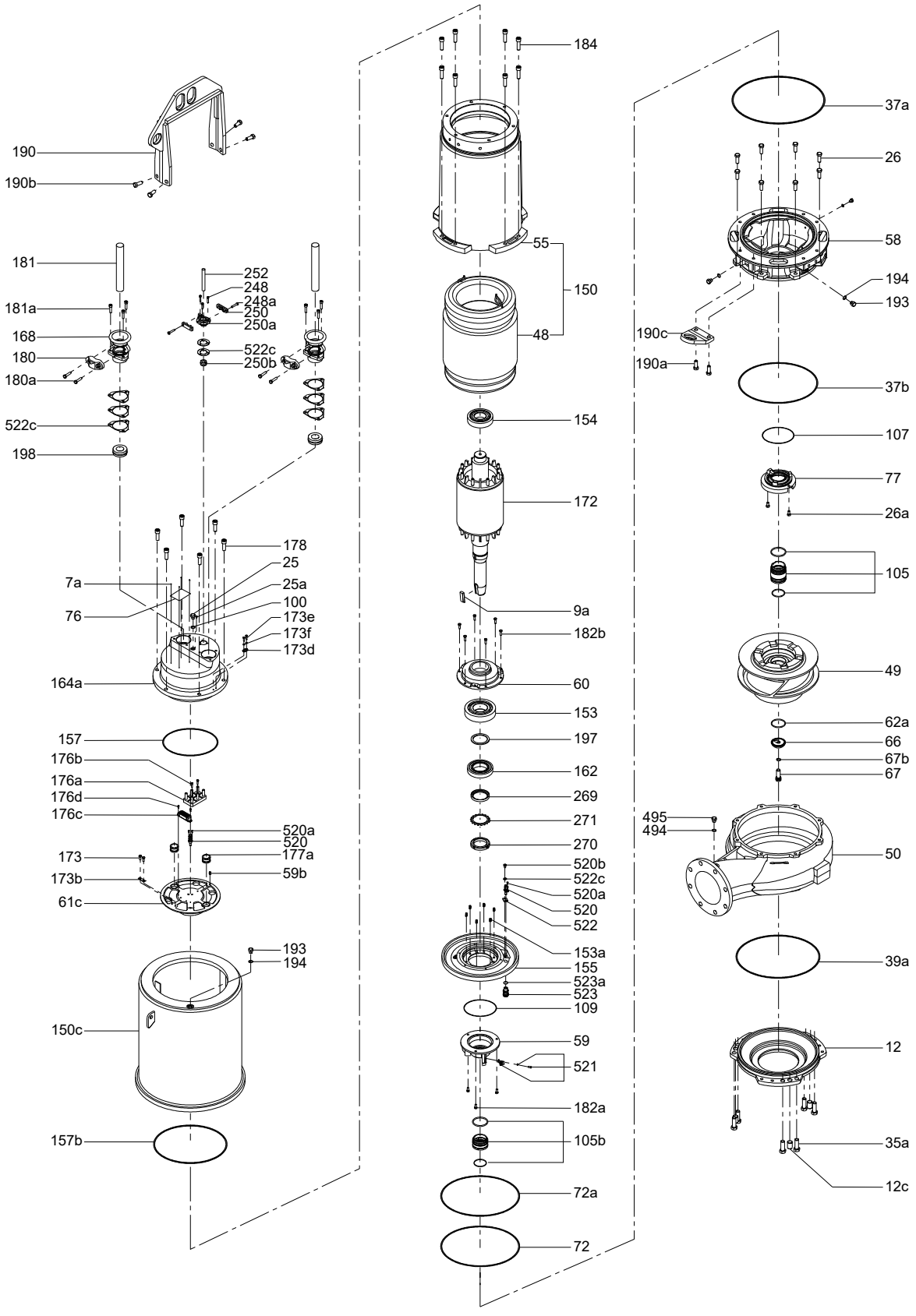

O-ring, motors

Pos.	Range		66	70
	Description/kit No		*96294828*	*96294825*
37a	O-ring	499.3 x 5.7	1	1
		535.0 x 5.7	-	1
39	O-ring	299.3 x 5.7	-	1
72	O-ring	339.3 x 5.7	1	-
		349.3 x 5.7	1	-
		399.3 x 5.7	1	1
72a	O-ring	349.3 x 5.7	1	-
		359.3 x 5.7	1	-
		399.3 x 5.7	1	1
		419.3 x 5.7	-	1
100	O-ring	16.3 x 2.4	1	-
107	O-ring	139.3 x 5.7	1	1
109	O-ring	159.3 x 5.7	1	1
157	O-ring	259.3 x 5.7	1	-
		309.3 x 5.7	1	1
157b	O-ring	339.3 x 5.7	1	-
		349.3 x 5.7	1	-
		399.3 x 5.7	1	1
194	O-ring	16.3 x 2.4	3	3
62	O-ring	54.5 x 3.0	1	1

O-ring, pumps

Pos.	Range		66	70
	Description/kit No		*96294829*	*96294826*
37	O-ring	499.3 x 5.7	1	1
37b	O-ring	419.3 x 5.7	1	1
		439.3 x 5.7	1	1
39	O-ring	269.3 x 5.7	-	1
		279.3 x 5.7	1	1
		289.3 x 5.7	-	1
		299.3 x 5.7	1	1
		309.3 x 5.7	1	1
		399.3 x 5.7	1	1
		439.3 x 5.7	1	1
39a	O-ring	419.3 x 5.7	1	1
		439.3 x 5.7	1	1
		499.3 x 5.7	1	1
62	O-ring	69.5 x 3.0	1	1
		74.5 x 3.0	1	1
62a	O-ring	64.5 x 3.0	1	1
67b	O-ring	22.3 x 3.0	1	1
109	O-ring	59.5 x 3.0	1	1
495	O-ring	16.3 x 2.4	1	1

Lifting bracket

Pos.	Range	66	70
	Description/kit No	*99466460*	*99466462*
190	Lifting bracket	1	1
190b	Screw	4	4
190e	Plug	-	1
190f	Washer	4	4

Range 66- Non-explosion-proof pump

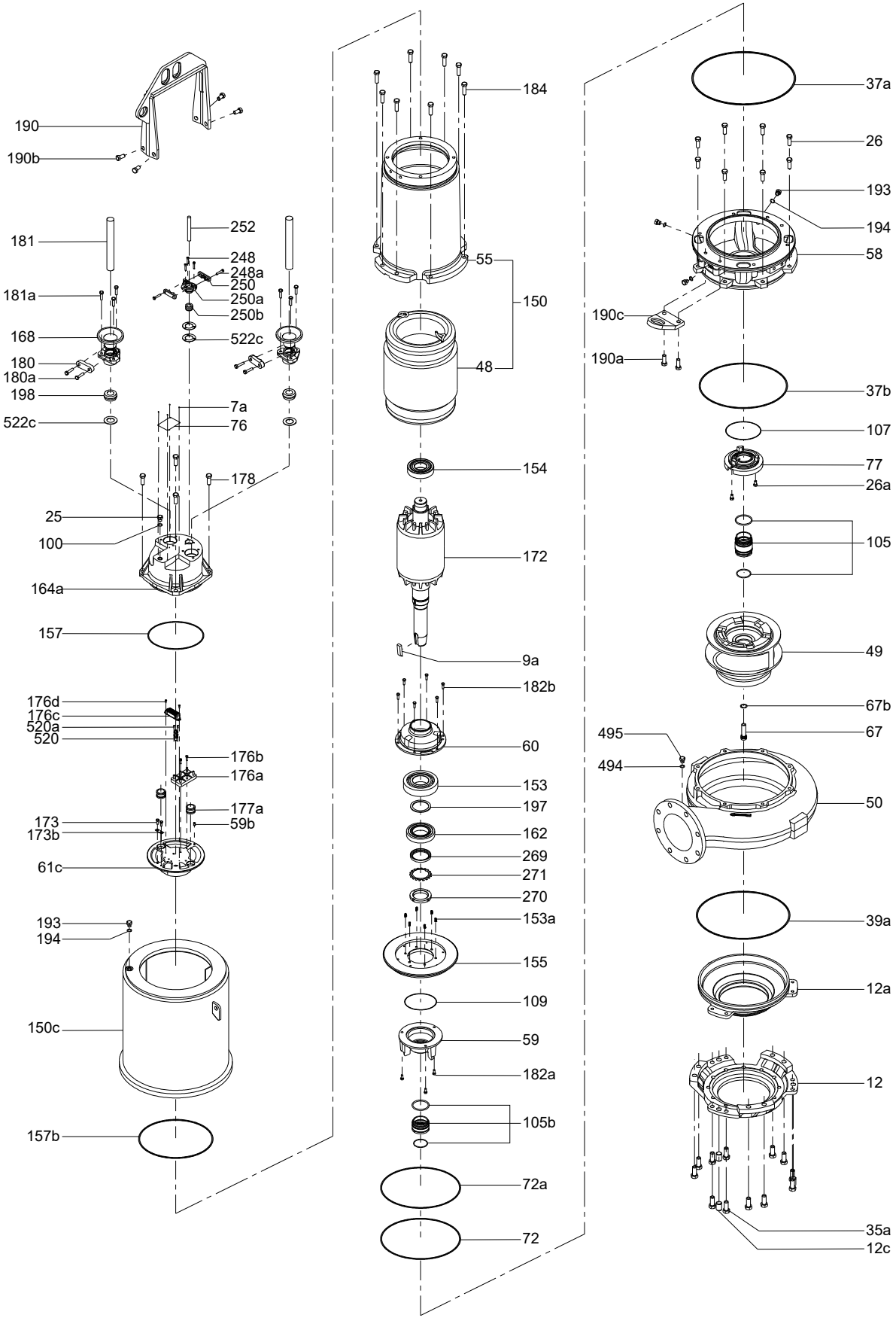

Range 70 - Non-explosion-proof pump

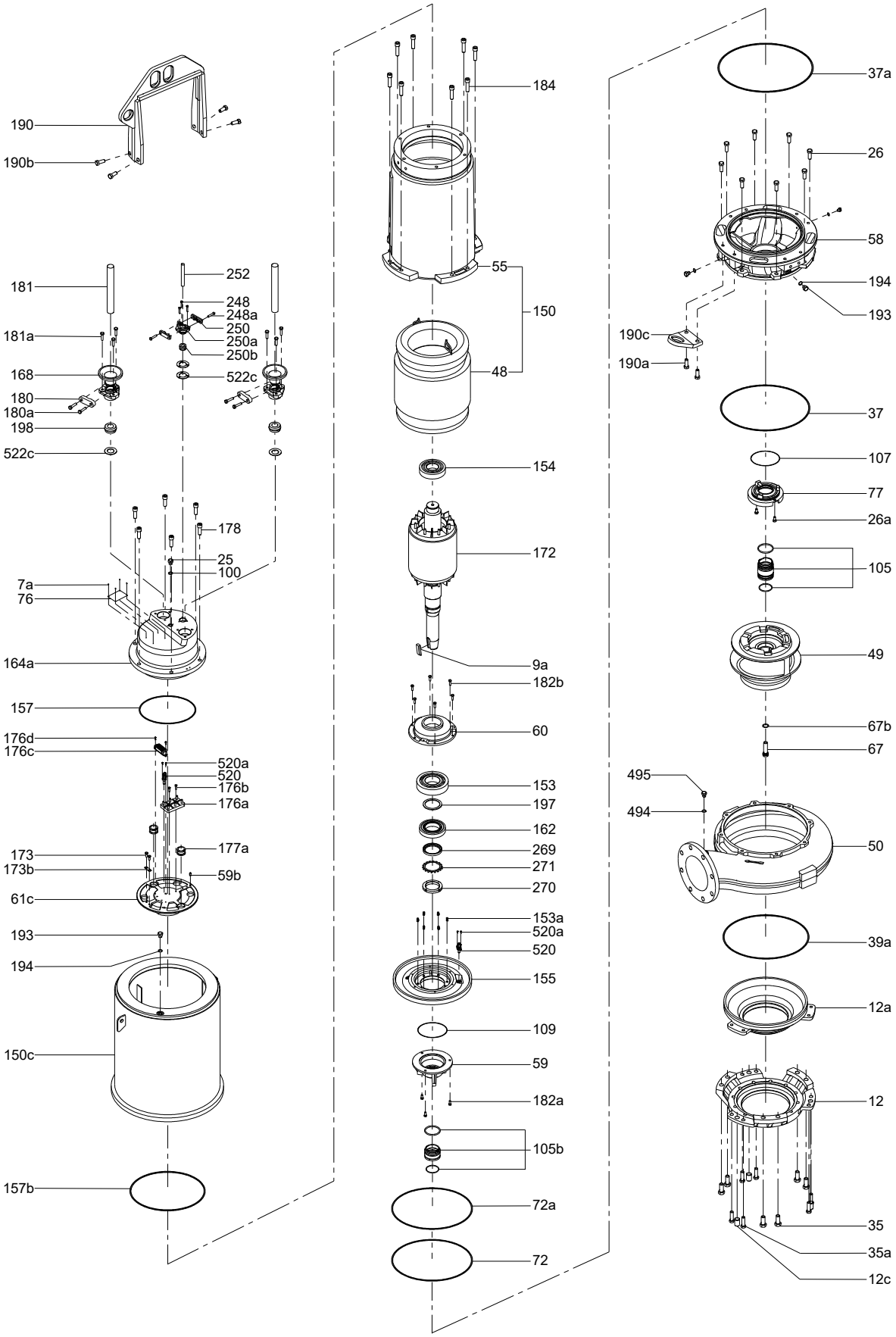

Range 72
50/60 Hz

Cable

Pos.	Description	Cable length			
		10 m (33 ft)	15 m (50 ft)	25 m (82 ft)	50 m (165 ft)
181	4 x 70 mm^2	*97621415*	*97655908*	*97655909*	*97655921*
	4 x 95 mm^2	*97621414*	*97655904*	*97655905*	*97655906*
	4 x 120 mm^2	*97621413*	*97655886*	*97655889*	*97655890*

Cable inlet

Pos.	Poles	10		6, 8		4	
	Cable type	4 x 70 mm^2		4 x 95 mm^2		4 x 120 mm^2	
	Pump type	Standard	Ex	Standard	Ex	Standard	Ex
	Description/kit No	*96842597*	*96842611*	*96293955*	*97621409*	*96293954*	*97621410*
168	Cable entry	1	1	1	1	1	1
180	Cable clamp	1	1	1	1	1	1
180a	Hex screw	3	3	2	2	2	2
181a	Socket cap screw	2	2	3	3	3	3

Cable inlet gasket

Pos.	Description	Cable type	Poles	Kit No
198	Rubber seal	4 x 120 mm^2	4	*97621411*
		4 x 95 mm^2	6, 8	*97621412*
		4 x 70 mm^2	10	*96842639*

Ex approved cable inlet

Manufactured 6.9.2017 and forward.

Pos.	Cable ID	46-1	46-2	46-3	46-4	80-1	80-2	80-3	100-1	100-2	100-3
	Description/Kit No	*99174567*	*99174568*	*99174569*	*99174570*	*99174573*	*99174574*	*99174575*	*99174576*	*99174577*	*99174578*
7a	Rivet	2	2	2	2	2	2	2	2	2	2
76b	Approval plate	1	1	1	1	1	1	1	1	1	1
168	Cable entry	1	1	1	1	1	1	1	1	1	1
180	Cable clamp	1	1	1	1	1	1	1	1	1	1
180a	Screw	2	2	2	2	2	2	2	2	-	-
	Bolt	-	-	-	-	-	-	-	-	2	2
181a	Screw	3	3	3	3	3	3	3	3	3	3
185	Washer	-	2	3	5	3	3	3	-	8	6
198	Rubber seal	1	1	1	1	1	1	1	1	1	1

Control cable

Pos.	Description	Cable length			
		10 m (33 ft)	15 m (50 ft)	25 m (82 ft)	50 m (165 ft)
252	10 x 1.5 mm^2	*95112879*	*95112880*	*95112881*	*95112882*

Control cable inlet

Pos.	Cable size	10 x 1.5 mm^2	
	Pump type	Standard	Ex & FM
	Description/kit No	*96842618*	*96842612*
250a	Cable entry	1	1
250	Cable clamp	1	1
248a	Hex screw	2	2
248	Socket cap screw	3	3

Control cable inlet gasket

Pos.	Description	Cable type	Kit No
250b	Rubber seal	10 x 1,5 mm^2	*96842640*

Range 72

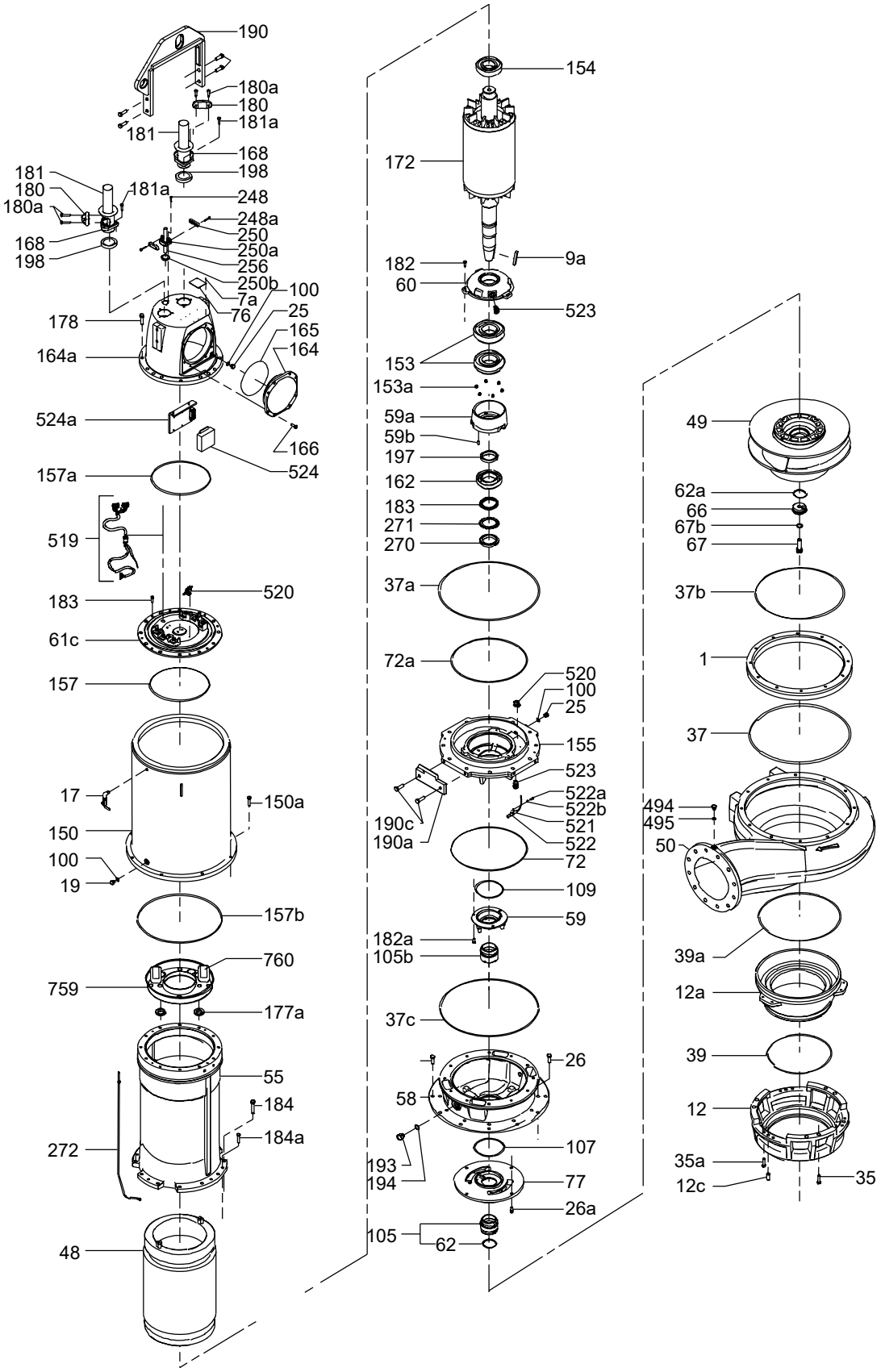
190
180a
180
181a
181
168
198
181
180
180a
181a
248
248a
250
250a
256
250b
7a
76
100
25
165
164
178
164a
524a
166
524
157a
519
520
183
61c
157
17
150a
150
100
19
157b
760
759
177a
55
184
184a
272
48
154
172
182
9a
60
523
153
153a
59a
59b
197
162
183
271
270
37a
72a
520
100
25
155
523
522a
522b
521
522
190c
190a
72
109
59
182a
105b
37c
26
58
107
193
194
77
26a
105
62
49
62a
66
67b
67
37b
1
37
494
495
50
39a
12a
39
12
35a
12c
35
TM033053

Lower bearing

Pos.	Description/kit No	96293943
59a	Locking ring	1
59b	Pin	1
153	Angular bearing	2
153a	Spring	6
162	Roller bearing	1
197	Support washer	1
269	Intermediate ring	1
270	Nut	1
271	Lock washer	1

Upper bearing

Pos.	Description	97621449
154	Bearing	1

Moisture switch

Pos.	Description/kit No	96256056
520	Moisture switch	1
-	Adjusting gauge	1
-	Connector set (6 pcs)	1

Water-in-oil sensor

Pos.	Description/kit No	96293944
521	Water-in-oil sensor (cable 2.5 m)	1
522	Sensor holder	1
522a	Screw M6 x 16	1
522b	Washer	1

Primary shaft seal

Pos.	Description/kit No	96293941
105	Primary shaft seal	1

Secondary shaft seal

Pos.	Description/kit No	96293942
105b	Secondary shaft seal	1

O-ring, motor

Pos.	Description/kit No		96293952
37c	O-ring	608.1 x 7.0	1
72	O-ring	456.1 x 7.0	1
72a	O-ring	456.1 x 7.0	1
100	O-ring	16.3 x 2.4	1
107	O-ring	181.0 x 7.0	1
109	O-ring	169.3 x 5.7	1
157	O-ring	418.0 x 7.0	1
157a	O-ring	430.7 x 7.0	1
165	O-ring	234.3 x 7.0	1

O-ring, pump

Pos.	Description/kit No		96293951
37	O-ring	647.1 x 7.0	1
37b	O-ring	557.7 x 7.0	1
39	O-ring	379.3 x 5.7	1
		399.3 x 5.7	1
		439.3 x 5.7	1
		582.7 x 7.0	1
39a	O-ring	419.3 x 5.7	1
		499.3 x 5.7	1
		596.3 x 7.0	1
100	O-ring	16.3 x 2.4	1

Lifting lug

Pos.	Description	97621402
190a	Lifting lug	1
190c	Screw	4

Lifting bracket

Pos.	Description	99466594
190	Lifting bracket	1
190b	Screw	4

Range 72

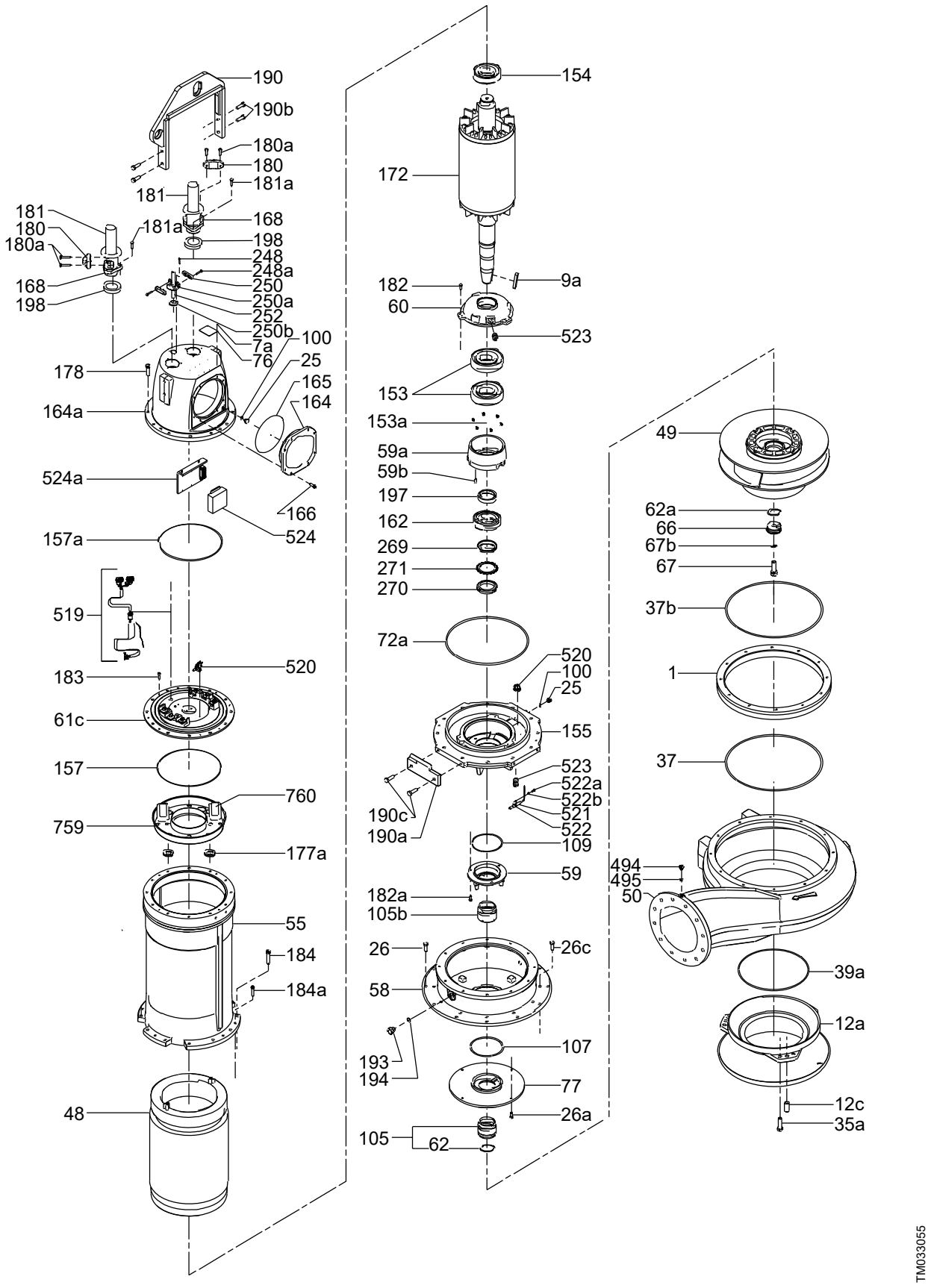
190
190b
180a
180
181a
181
181
180
180a
181a
168
198
248
248a
250
250a
252
250b
7a
76
100
25
165
164
178
164a
524a
166
524
157a
519
520
183
61c
157
760
759
177a
55
184
184a
48
154
172
9a
182
60
523
153
153a
59a
59b
197
162
269
271
270
72a
520
100
25
155
523
522a
522b
521
522
190c
190a
109
59
182a
105b
26
26c
58
107
193
194
77
26a
105
62
49
62a
66
67b
67
37b
1
37
494
495
50
39a
12a
12c
35a
TM033055

Ranges 74 and 78
50/60 Hz

Cable

Pos.	Description	Range		Cable length			
		74	78	10 m (33 ft)	15 m (50 ft)	25 m (85 ft)	50 m (165 ft)
181	4 x 70 mm^2	•	•	*97621415*	*97655908*	*97655909*	*97655921*
	4 x 95 mm^2	•	•	*97621414*	*97655904*	*97655905*	*97655906*
	4 x 120 mm^2	•	•	*97621413*	*97655886*	*97655889*	*97655890*
	4 x 150 mm^2		•	*97623094*	*97655928*	*97655929*	*97655930*
	4 x 185 mm^2		•	*97623093*	*97655924*	*97655926*	*97655927*

Cable inlet

Pos.	Cable type	4 x 70 mm^2		4 x 95 mm^2		4 x 120 mm^2		4 x 150 mm^2		4 x 185 mm^2	
	Pump type	Standard	Ex	Standard	Ex	Standard	Ex	Standard	Ex	Standard	Ex
	Description/kit No	*99198884*	*96842597*	*99198886*	*96293955*	*99198888*	*96293954*	*99198887*	*95113495*		*95113496*
39c	O-ring	1		1		1		1			
168	Cable entry	1		1		1		1			
168a	Adapter flange	1		1		1		1			
180	Cable clamp	1		1		1		1			
180a	Hex screw	2		2		2		2			
181a	Screw	3		3		3		3			
183b	Hex head screw	3		3		3		3			

Cable inlet gasket

Pos.	Cable size	4 x 70 mm^2	4 x 95 mm^2	4 x 120 mm^2	4 x 150 mm^2
	Description/kit No	*96842639*	*97621412*	*97621411*	*97623091*
198	Rubber seal	1	1	1	1

Ex approved cable inlet

Manufactured 6.9.2017 and forward.

Pos.	Cable ID	46-1	46-2	46-3	46-4	80-1	80-2	80-3	100-1	100-2	100-3
	Description/Kit No	*99174567*	*99174568*	*99174569*	*99174570*	*99174573*	*99174574*	*99174575*	*99174576*	*99174577*	*99174578*
7a	Rivet	2	2	2	2	2	2	2	2	2	2
76b	Approval plate	1	1	1	1	1	1	1	1	1	1
168	Cable entry	1	1	1	1	1	1	1	1	1	1
180	Cable clamp	1	1	1	1	1	1	1	1	1	1
180a	Screw	2	2	2	2	2	2	2	2	-	-
	Bolt	-	-	-	-	-	-	-	-	2	2
181a	Screw	3	3	3	3	3	3	3	3	3	3
185	Washer	-	2	3	5	3	3	3	-	8	6
198	Rubber seal	1	1	1	1	1	1	1	1	1	1

Control cable

Pos.	Description/length	10 m	15 m	25 m	50 m
252	Control cable (10 x 1.5 mm^2)	*95112879*	*95112880*	*95112881*	*95112882*

Control cable inlet

Pos.	Description/kit No	*96842612*
168	Cable entry	1
180	Cable clamp	1
181a	Socket cap screw	3
248a	Hex screw	2

Control cable inlet gasket

Pos.	Description/kit No	*96842640*
250b	Rubber seal	1

Range 74 - Non-explosion-proof pump

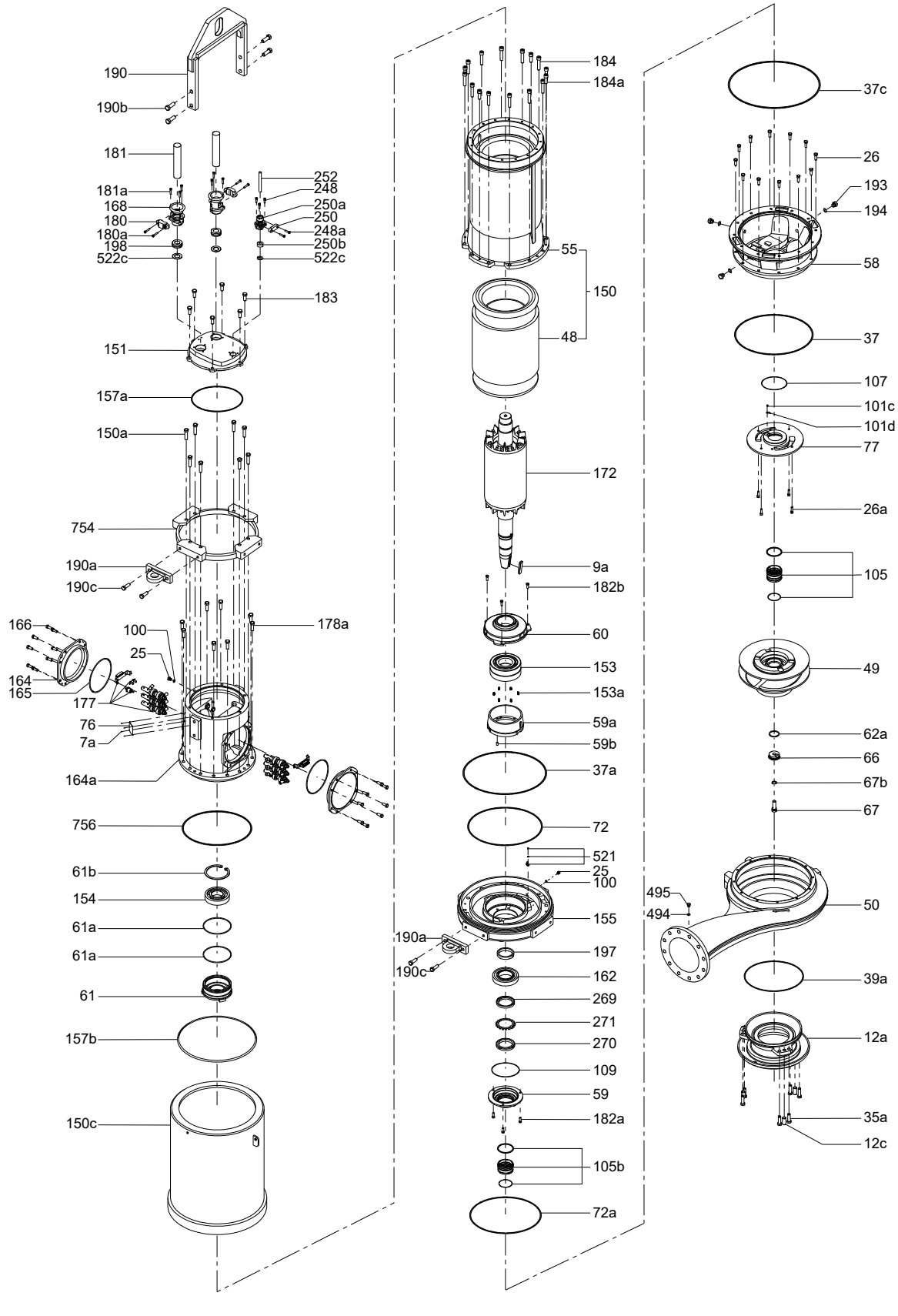

Range 78 - Non-explosion-proof pump

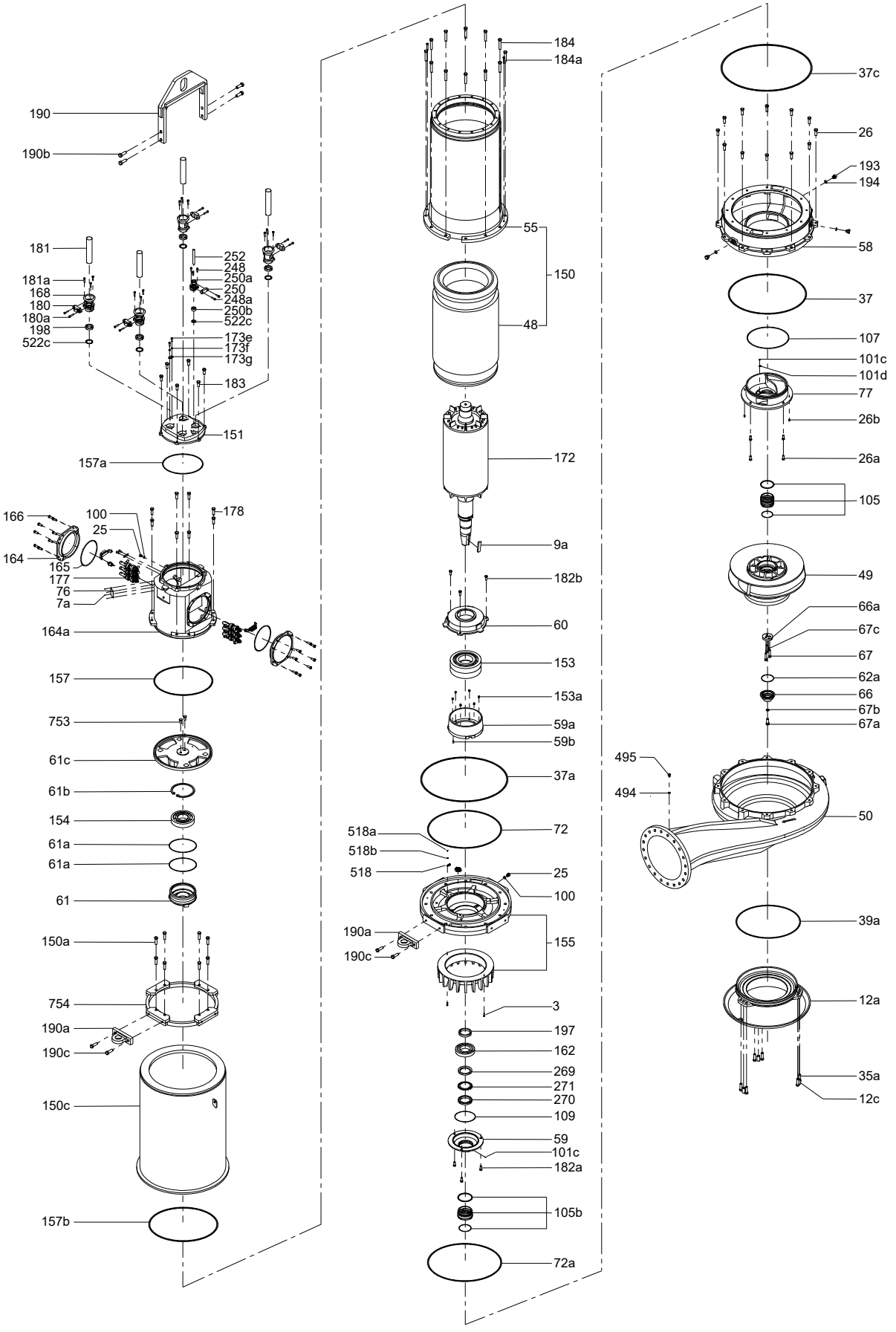

Moisture switch

Pos.	Description/kit No	96256056
224	Moisture switch	1
-	Connector set (6 pc.)	1
-	Adjusting fork	1

Water-in-oil sensor

Description/kit No		96295150	96295149	96295148
Water-in-oil sensor	10 m	1	-	-
	25 m	-	1	-
	50 m	-	-	1
Cable entry		1	1	1
Rubber seal		1	1	1
Right-angle connector		1	1	1
Protective hose		8	8	8
Fixing piece		2	2	2
Band		5	5	1
Band lock		2	2	2
O-ring		1	1	1
Shrink glue		1	1	1

Transient barrier set for WIO

Pos.	Description/kit No	98686403
518	Transient barrier	1
518a	Cylindric screw	1
518b	Star washer	1
-	Insulation hose	1
-	Terminal blade	2
-	Butt splice	2

Lifting bracket

Pos.	Range	74	78
	Description/kit No	99466591	99466595
190	Lifting bracket	1	1
190b	Screw	4	4

Lifting lug

Pos	Range	74	78
	Description/kit No	97623081	97623267
190a	Lifting lug	1	1
190c	Screw	4	4

Upper bearing

Pos	Range	74	78
	Description/kit No	97623102	97623279
154	Ball bearing	1	1

Lower bearing

Pos	Range	74	78
	Description/kit No	95113486	95113487
59a	Locking ring	1	1
59b	Pin	1	1
153	Angular bearing	2	2
153a	Spring	6	6
162	Roller bearing	1	1
197	Washer	1	1
269	Angle ring	1	1
270	Nut	1	1
271	Locking ring	1	1

Primary shaft seal

Pos	Range	74	78
	Description/kit No	97536236	97536234
105	Primary shaft seal	1	1

Secondary shaft seal

Pos	Range	74	78
	Description/kit No	97536237	97536235
150b	Secondary shaft seal	1	1

O-ring, motor

Pos.	Description/kit No		97623100
37c	O-ring	699.0 x 7.0	1
61a	O-ring	209.0 x 5.7	2
72	O-ring	541.0 x 7.0	1
100	O-ring	16.3 x 2.4	2
107	O-ring	181.0 x 7.0	1
109	O-ring	209.3 x 5.7	1
157	O-ring	481.5 x 7.01	1
157a	O-ring	405.3 x 7.0	1
165	O-ring	285.1 x 7.0	2
756	O-ring	582.7 x 7.0	1

O-ring, pump

Pos	Range		74	78
	Description/kit No		96293951	97623276
37	O-ring	647.1 x 7.0	1	-
37b	O-ring	557.7 x 7.0	1	-
		920.0 x 7.0	-	1
39	O-ring	379.3 x 5.7	1	-
	O-ring	399.3 x 5.7	1	-
	O-ring	439.3 x 5.7	1	-
	O-ring	532.3 x 7.0	-	1
	O-ring	582.7 x 7.0	1	1
39a	O-ring	419.3 x 5.7	1	-
	O-ring	499.3 x 5.7	1	-
	O-ring	596.3 x 7.0	1	-
	O-ring	608.1 x 7.0	-	1
	O-ring	658.9 x 7.0	-	1
100	O-ring	16.3 x 2.4	1	-
488	O-ring	1200.0 x 7.0	-	1
495	O-ring	16.3 x 2.4	-	1

Range 74 - Explosion-proof pump

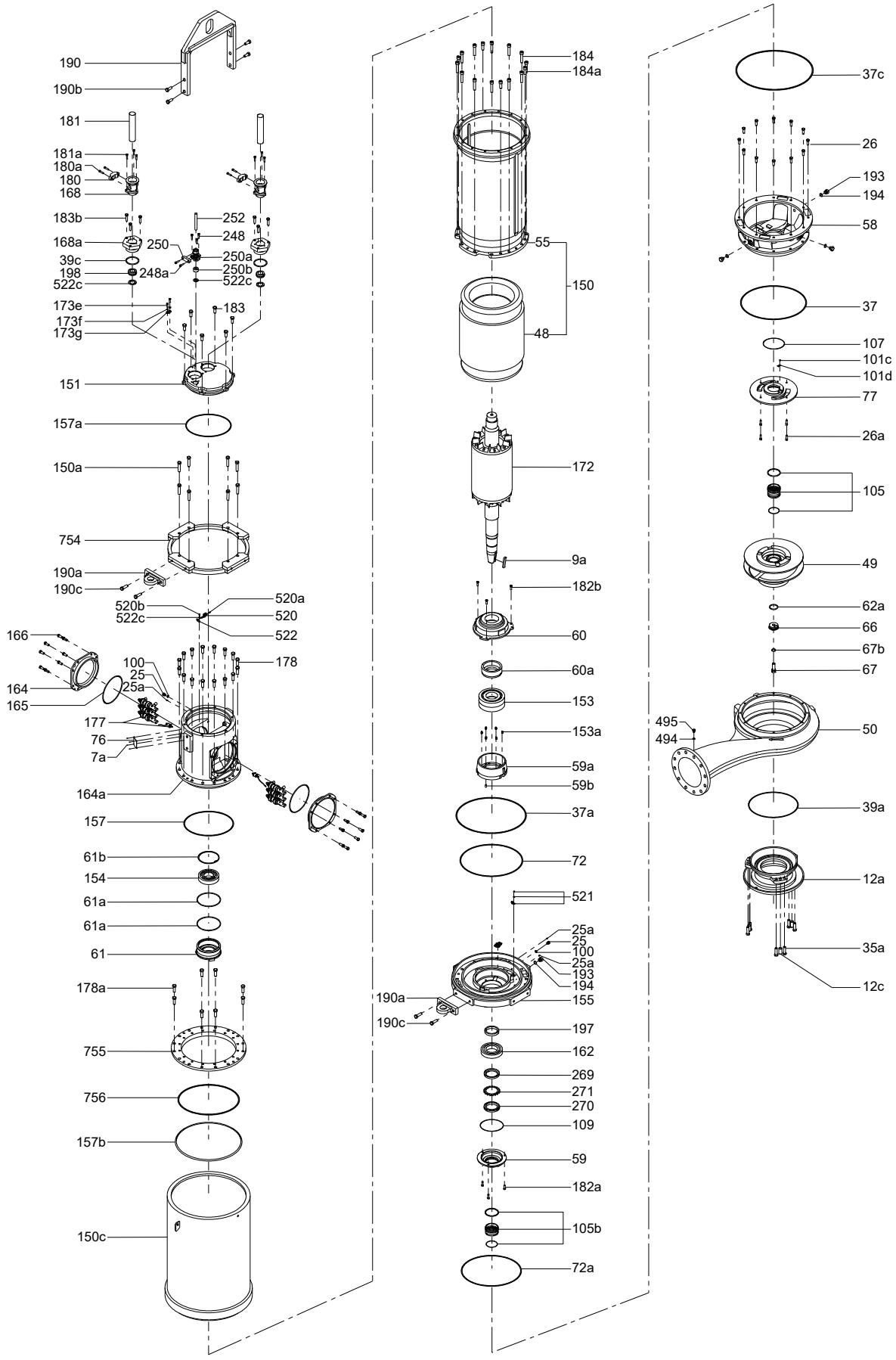

Range 78 - Non-explosion-proof pump

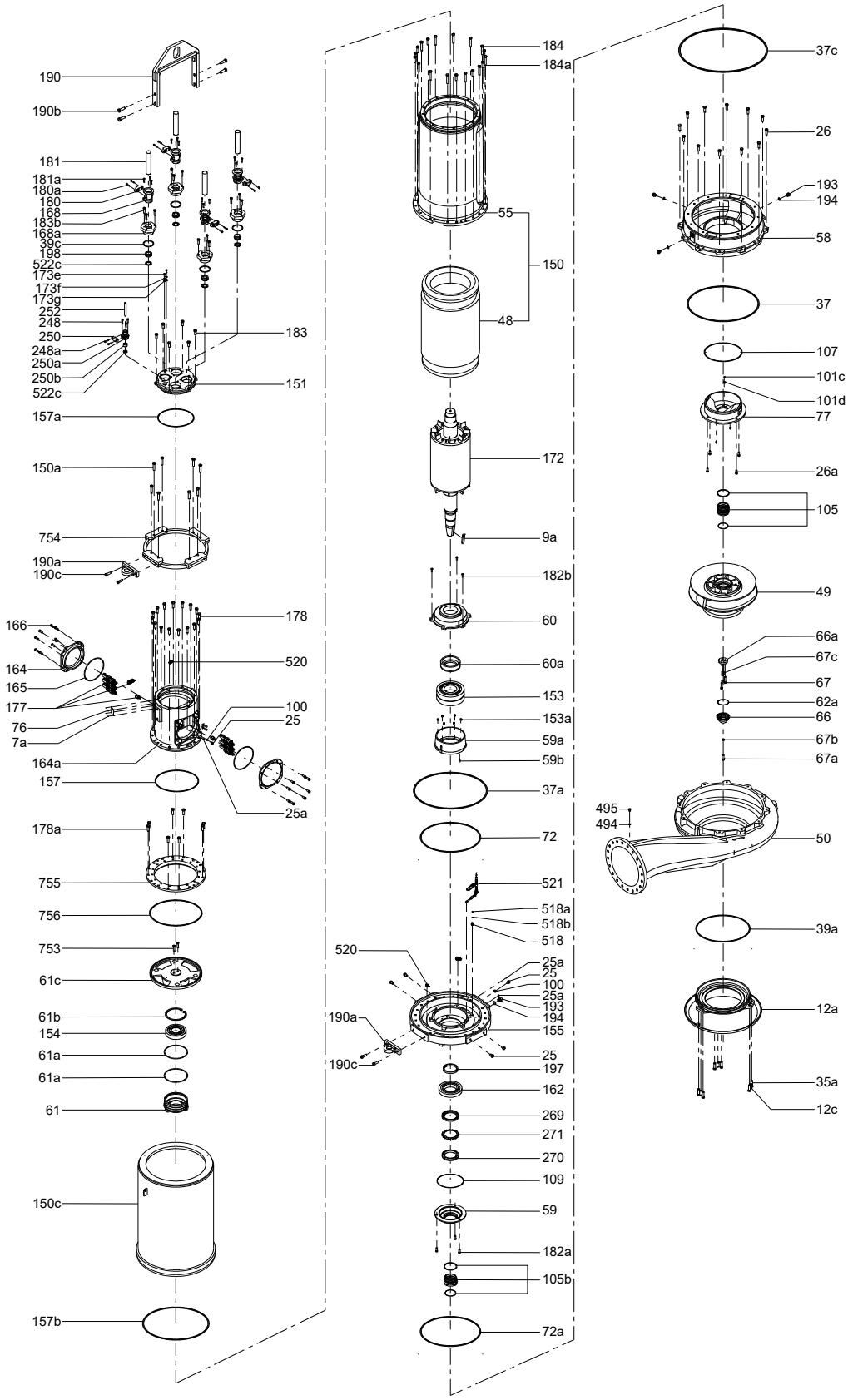

70. SB, SBA

SB

50/60 Hz

Cable

	Pump type	SB			
	Plug type	Schuko	Australia	None	NEMA
	Kit No	*98244389*	*98244390*	*98244402*	*98244403*
Pos.	Description				
48a	O-ring	1	1	1	1
48b	Cable crimp	3	3	3	3
181	Cable, 15 m	1	1	1	1
250	Cable entry	2	2	2	2
250a	Cable relief	2	2	2	2

Discharge connection

	Pump type	SB			
	Frequency	50 Hz		60 Hz	
	Packaging	Single	Bulk	Single	Bulk
	Kit No	*98573364*	*98244819*	*98573381*	*98244866*
Pos.	Description				
149	Non return valve	1	10	1	10
149a 149b	Discharge connection	1	10	1	10

Impeller

	Pump type	SB	
		50 Hz	60 Hz
	Kit No	*98244814*	*98244818*
Pos.	Description		
4	Chamber	3	3
4a	Diffuser flange	1	1
6	Diffuser cap	1	1
49	Impeller	4	4
141C	Clearance ring	4	4

SB

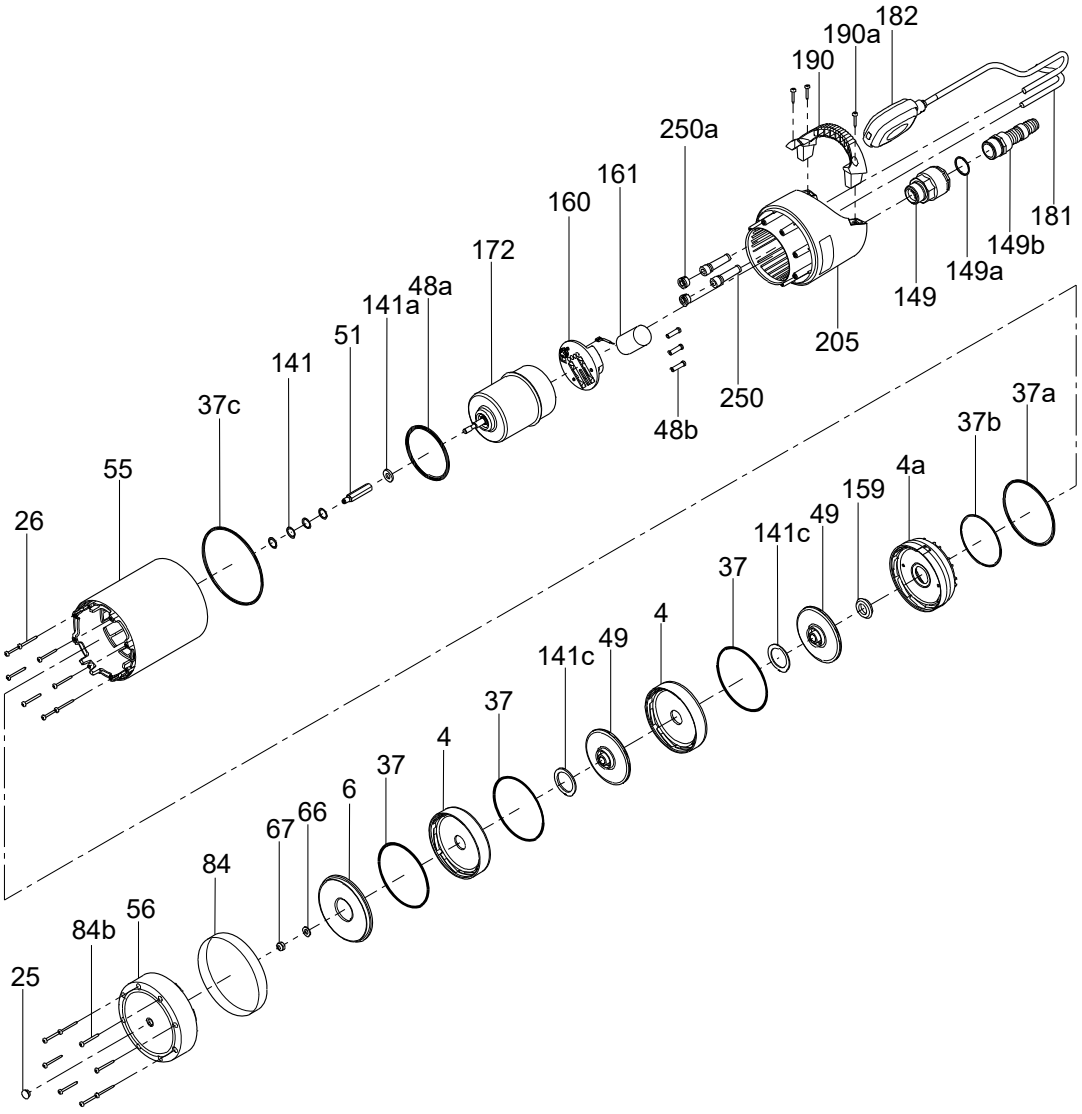
182
190a
190
250a
161
160
172
48a
141a
51
141
37c
55
26
181
149b
149a
149
205
250
48b
37a
37b
4a
159
49
141c
37
4
49
141c
37
4
37
6
66
67
84
56
84b
25
TM046209

SBA

SBA, 50/60 Hz

Cable

	Pump type	SBA			
	Plug type	Schuko	Australia	None	NEMA
	Kit No	*98679480*	*98679485*	*98679487*	*98679489*
Pos.	Description				
181	Cable, 15 m	1	1	1	1
182a	Screw	2	2	2	2
182b	O-ring	1	1	1	1

Cable and float switch

	Pump type	SBA			
	Plug type	Schuko	Australia	None	NEMA
	Kit No	*98679490*	*98679511*	*98679513*	*98679515*
Pos.	Description				
181	Cable, 15 m	1	1	1	1
182	float switch	1	1	1	1
182a	Screw	2	2	2	2
182b	O-ring	1	1	1	1

Discharge connection

	Pump type	SBA			
	Frequency	50 Hz		60 Hz	
	Packaging	Single	Bulk	Single	Bulk
	Kit No	*98679472*	*98679439*	*98679477*	*98679440*
Pos.	Description				
149	Non return valve	1	10	1	10
149a 149b	Discharge connection	1	10	1	10

Impeller

	Pump type	SBA	
		50 Hz	60 Hz
	Kit No	*98244814*	*98244818*
Pos.	Description		
4	Chamber	3	3
4a	Diffuser flange	1	1
6	Diffuser cap	1	1
49	Impeller	4	4
141C	Clearance ring	4	4

Non-return valve

	Pump type	SBA
		50/60 Hz
	Kit No	*98679516*
Pos.	Description	
151	Impeller	1
111	Clearance ring	1

SBA

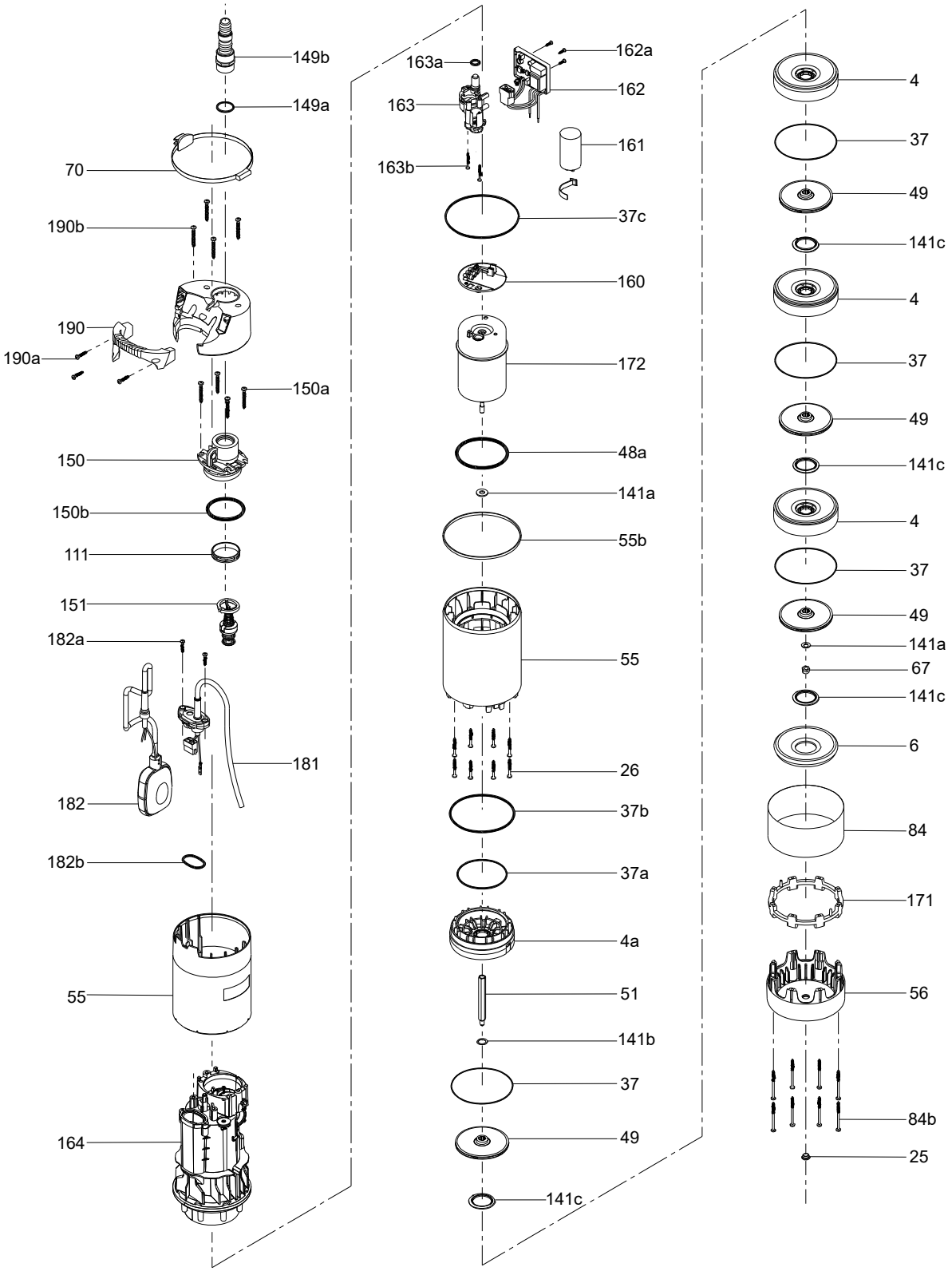
149b
149a
70
190b
190
190a
150a
150
150b
111
151
182a
181
182
182b
55
164
163a
162a
162
163
161
163b
37c
160
172
48a
141a
55b
55
26
37b
37a
4a
51
141b
37
49
141c
4
37
49
141c
4
37
49
141c
4
37
49
141a
67
141c
6
84
171
56
84b
25
TM061258

71. SCALA1

230 V 50/60 Hz

Hydraulic - 50 Hz

Pos.	Pump size	3-25	5-25	3-35	3-45	5-55
	Description/kit No	99742569	99775519	99775515	99742572	99742573
3	Final diffuser cap	1	1	1	1	1
4a	Impeller diffuser	2	2	3	3	4
4	Impeller diffuser body	3	3	3	3	3
44	First stage housing	1	1	1	1	1
44a	O-ring	1	1	1	1	1
66	Washer ∅17x1,6 SS	1	1	1	1	1
67	Lock nut, M8	1	1	1	1	1
37	O-ring	1	1	1	1	1
45	Forward bushing for impeller	2	2	3	3	4
45a	Backward bushing for impeller	2	2	3	3	4
45b	Impeller spacer	1	1			

Motor

Pos.	Pump size	3-25	5-25	3-35	3-45	5-55
	Description/kit No		99743077		99743135	99743138
150	Motor complete		1		1	1
37	O-ring		1		1	1
52	O-ring		1		1	1
53	O-ring		1		1	1
44a	O-ring		1		1	1

Pressure switch

Pos.	Pump size	3-25	5-25	3-35	3-45	5-55
	Description/kit No	99742575		99742576	99742578	99742580
174a	Pressure switch w. cable cpl.	1		1	1	1
174b	O-ring	1		1	1	1

North America (115V / 230V - 60 Hz)

Hydraulic - 60 Hz

Pos.	Pump size	3-25	5-25	3-35	3-45	5-55
	Description/kit No	99742537	99742567	99742570	99742568	99775515
3	Final diffuser cap	1	1	1	1	1
4a	Impeller diffuser	2	2	2	3	3
4	Impeller diffuser body	3	3	3	3	3
44	First stage housing	1	1	1	1	1
44a	O-ring	1	1	1	1	1
66	Washer ∅17x1,6 SS	1	1	1	1	1
67	Lock nut, M8	1	1	1	1	1
37	O-ring	1	1	1	1	1
45	Forward bushing for impeller	2	2	2	3	3
45a	Backward bushing for impeller	2	2	2	3	3
45b	Impeller spacer	1	1	1		

Fitting NPT1 and union, composite

Pos.	Description/kit No	99742583
100	Union nut 2"	1

Pos.	Description/kit No	99742583
100a	Fitting NPT1	1
100b	O-ring D40.0 x 4.00	1

Motor

Pos.	Pump size	3-25	5-25	3-35	3-45	5-55
	Description/kit No		99743139		99743140	99743141
150	Motor complete		1		1	1
37	O-ring		1		1	1
52	O-ring		1		1	1
53	O-ring		1		1	1
44a	O-ring		1		1	1

Capacitor, spare - 230V, 50/60Hz

Pos.	Pump size	3-25	5-25	3-35	3-45	5-55
	Description/kit No		99743297		99743974	99744020
161	Capacitor 10 µF.	•	•	•		
	Capacitor 12.5 µF				•	
	Capacitor 16 µF					•

Capacitor, spare - 115V, 60Hz

Pos.	Pump size	3-25	5-25	3-35	3-45	5-55
	Description/kit No		99744023			99743298
161	Capacitor 35 µF.	•	•	•	•	
	Capacitor 50 µF					•

Drain plugs

Pos.	Description/kit No	99743157
169a	Condensate discharge cup	2
169	Rear plug	1

Drain plug, bulk

Pos.	Description/bulk No	99016065
7	Drain plug	10

Fitting R1 and union, composite

Pos.	Description/kit No	99742585
100	Union nut 2"	1
100a	Fitting R1	1
100b	O-ring D40.0 x 4.00	1

O-ring

Pos.	Description/kit No	99742581
11a	O-ring	1
100b	O-ring	2
65b	O-ring	1
178a	O-ring	1
174b	O-ring	1
44a	O-ring	1
37	O-ring	1
150b	O-ring	1
53	O-ring	1
52	O-ring	1

O-ring, SCALA1 5-55

Pos.	Description/kit No	99755211
11a	O-ring	1
100b	O-ring	2
65b	O-ring	1
178a	O-ring	1

Pos.	Description/kit No	99755211
174b	O-ring	1
44a	O-ring	1
37	O-ring	1
150b	O-ring	1
53	O-ring	1
52	O-ring	1

O-ring for drain plug, bulk

Pos.	Description/bulk No	99743300
11a	O-ring	10

Plugs and valves

Pos.	Description/kit No	99743153
65a	Non-return valve discharge, complete.	1
65b	O-ring	1
7	Drain plug	1
11a	O-ring	1

Printed Circuit Board (PCB) - 230 V

Pos.	Description/kit No	99695070
181	PCB	1
181b	Lower enclosure	1

Printed Circuit Board (PCB) - 115 V

Pos.	Description/kit No	99695065
181	PCB	1
181b	Lower enclosure	1

Shaft seal

Pos.	Description/kit No	99742574
103	Shaft seal, stationary part	1
104	Shaft seal, rotating part	1
44a	O-ring	1
37	O-ring	1

Spare parts

Pos.	Description	Pump size	Product no.
181c	Connection module	3-25	*99743166*
		3-35	
		3-45	
		5-25	
		5-55	*99743167*
156b	Motor stool	3-25	*99743291*
		3-35	
		3-45	
		5-25	
		5-55	*99743292*
180	Stator house	3-25	*99743293*
		3-35	
		3-45	
		5-25	
		5-55	*99743294*
2	House for connection module		*99743295*
164	Terminal cover		*99743296*
41	Membrane for pressure tank		*99743164*

SCALA1 3-25, 5-25

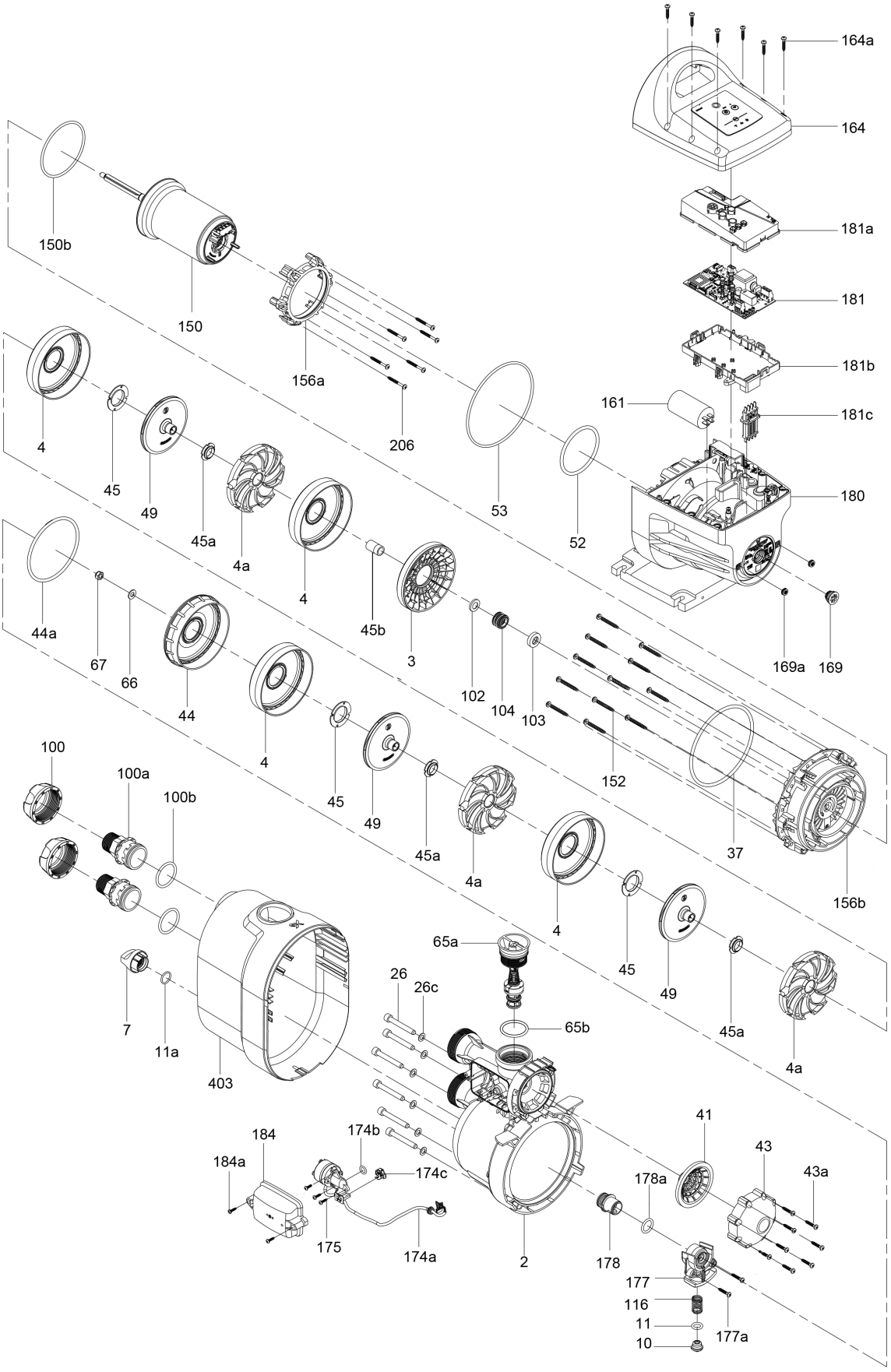

SCALA1 3-35, 3-45, 5-55

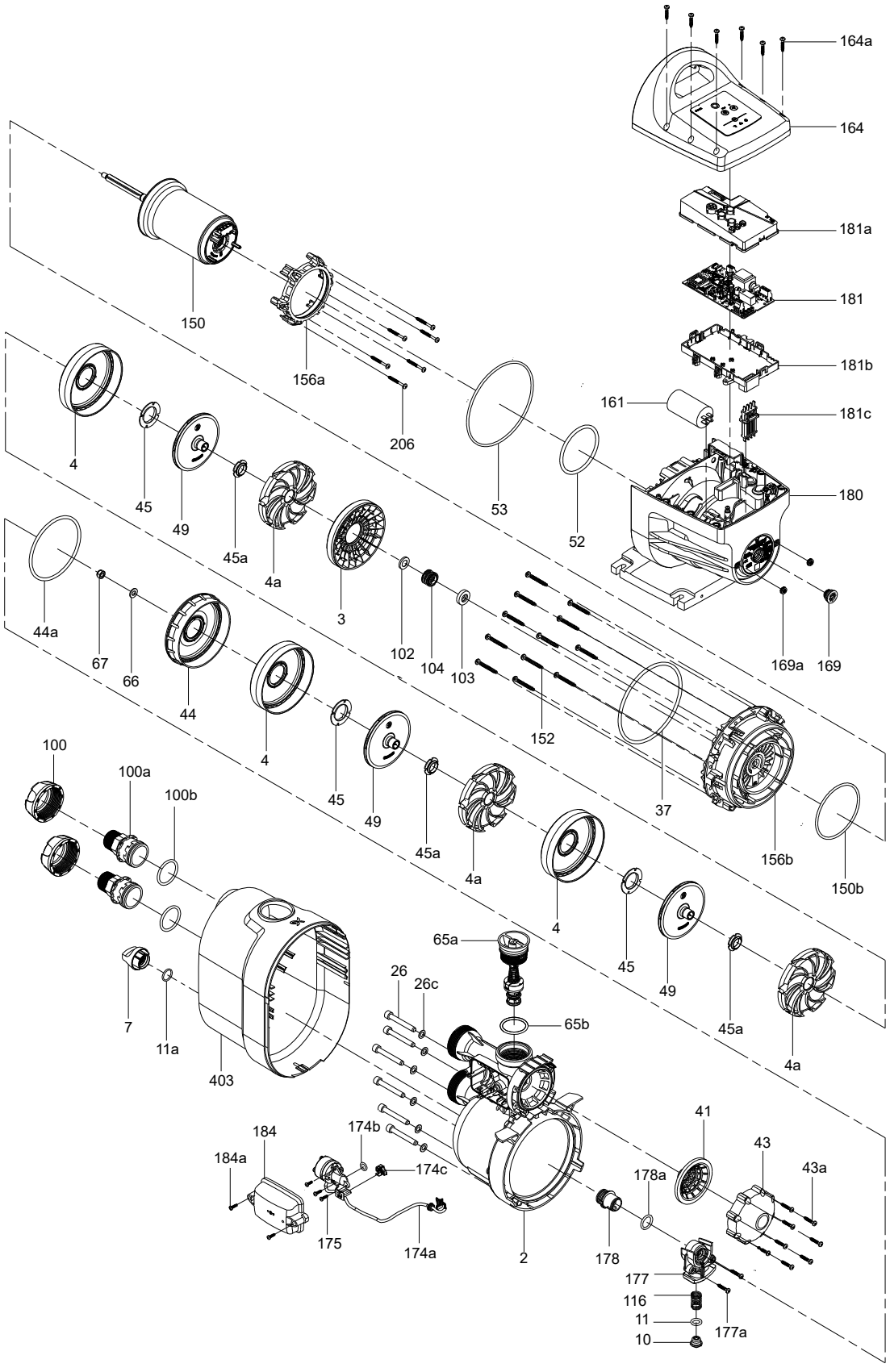

72. SCALA2

50/60 Hz

Chamber stack

Pos.	Description/kit No	99016032
49	Impeller complete with wear ring	4
4	Chamber complete for support	1
4	Chamber complete.	2
44	Inlet part for hydraulic complete	1
44a	Seal ring for inlet part	1
66	Washer ø15,5x1,5 SS	1
67	Lock nut	1
169	Plug for nameplate D30.2x15.4	1
37	O-ring D110.72x3.53	1

Connection module

Pos.	Description/kit No	99016047
2	Connection part for hydraulic	1
10	Valve for self priming	1
37	O-ring	1
42a	Gasket, flat	1
44a	Seal ring for inlet part	1

Cover for hydraulic

Pos.	Description/kit No	99016053
403	Cover for hydraulic	1

Cover complete, SCALA2

Pos.	Description/kit No	99016058
164	Cover complete for SCALA2	1

Drain plug, bulk

Pos.	Description/kit No	99016065
7	Drain plug	10

Fitting R1 and union, composite

Pos.	Description/kit No	99016013
100	Union nut 2"	1
100a	Fitting R1	1
100b	O-ring D40.0 x 4.00	1

Fitting NPT1 and union, composite

Pos.	Description/kit No	99016015
100	Union nut 2"	1
100a	Fitting NPT1	1
100b	O-ring D40.0 x 4.00	1

O-rings

Pos.	Description/kit No	99016019
37	O-ring D110.72 x 3.53	1
100b	O-ring D40.0 x 4.00	2
11a	O-ring D17.86 x 2.62	1
44a	Seal ring f/inlet part	1
-	O-ring D30.00 x 4.00	1
42a	Gasket Flat 39.2 x 24 x 2.5	1
-	O-ring D17.00 x 4.50	2
-	Seal cap EP 11/7/4	1

O-ring for Drain plug, bulk

Pos.	Description/kit No	99016066
11a	O-ring D17.86 x 2.62	10

Plugs and valves

Pos.	Description/kit No	99016030
65a	Non-return valve discharge, complete.	1
65	Non-return valve inlet, complete.	1
7	Drain plug	1
11a	O-ring D17.86 x 2.62	1

Pressure tank

Pos.	Description/kit No	99016027
42	Tank complete	1
42a	Gasket Flat 39.2 x 24 x 2.5	1

Shaft seal

Pos.	Description/kit No	99016024
105	Shaft seal complete.	1
67	Lock nut	1
66	Washer ø15,5x1,5 SS	1

SCALA2

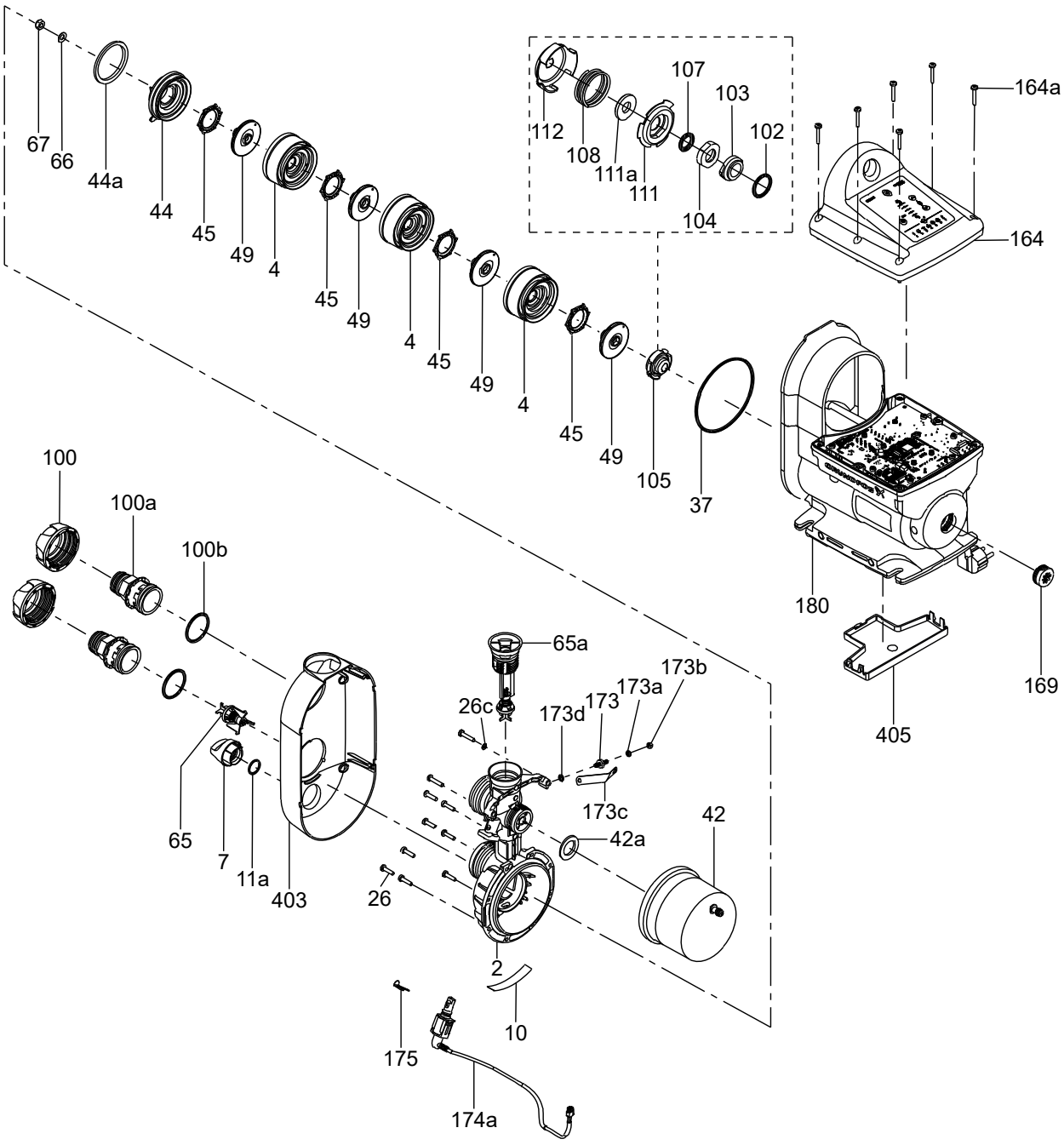
67
66
44a
44
45
49
4
45
49
4
45
49
4
45
49
105
37
112
108
111a
111
104
107
103
102
164a
164
180
169
405
100
100a
100b
65
7
11a
403
26
2
10
175
174a
65a
26c
173d
173
173a
173b
173c
42
42a
TM064966

73. SE, SL

50/60 Hz (DIN and US)

Cable

Pos.	Description	Cable length [m (ft)]				
	Cable type	10 (n/a)	15 (49)	25 (82)	30 (98)	50 (164)
	7 x 4 + 5 x 1.5 mm^2	*98119436*	*98119438*	*98119439*	*98119440*	*98119441*
181	7 x 6 + 5 x 1.5 mm^2	*98119430*	*98119431*	*98119432*	*98119433*	*98119435*
	7 x 10 + 5 x 1.5 mm^2	*98119425*	*98119426*	*98119427*	*98119428*	*98119429*

Cable EMC

Pos.	Description	Cable length [m (ft)]				
	Cable type	10 (n/a)	15 (49)	25 (82)	30 (98)	50 (164)
	3 x 6 + 5 x 1 mm^2	*98119420*	*98119421*	*98119422*	*98119423*	*98119424*
181	3 x 10 + 5 x 1 mm^2	*98119414*	*98119415*	*98119416*	*98119417*	*98119418*
	3 x 16 + 5 x 1 mm^2	*98119398*	*98119399*	*98119411*	*98119412*	*98119413*

Cable entry

Pos.	Description	1.4408	1.4517	1.4408	1.4517	1.4408
		Standard		Ex.		FM
	Kit No	*99485578*	*98119392*	*99485579*	*98119394*	99107242
157d	O-ring	1	1	1	1	1
168	Cable entry	1	1	1	1	1
168a	Cable entry lower	1	1	1	1	1
168b	Cover for connector	1	1	1	1	1
176a	Terminal block	1	1	1	1	1
176c	Plug housing	1	1	1	1	1
181a	Screw	2	2	2	2	2
198a	Washer	1	1	1	1	1
198b	Washer	1	1	1	1	1
198c	Disc spring	4	4	4	4	3
-	Connector pin	5	5	5	5	5
-	Connector terminal	5	5	5	5	5
-	Connector housing	7	7	7	7	7
-	Connector housing screw	14	14	14	14	14
-	Heat shrink sleeve	1	1	1	1	1

Cable entry gasket

Pos.	Description	DIN [mm]		US [in]
		Ø23.5-28	Ø17-24	Ø0.9-1.1
	Kit No	*98119395*	*98119396*	99107623
198	Rubber seal	1	1	1

Impeller

Pos.	Description
49	See Grundfos Product Center

Impeller fastening kit

Pos.	Description/Kit No	*98120686*
66	Washer	1
67	Screw	1

Adjusting screw

Pos.	Description/Kit No	*98120687*
12c	Adjusting screw	3

Bearing

Pos.	Description	Upper bearing	Lower bearing
	Kit No	*98119104*	*98119105*
153	Ball bearing	-	1
154	Ball bearing	1	-
187	Lock washer	-	1
187a	Washer	-	1

Plug set

Pos.	Description	*98142061*
193	Plug N 3/8	5

Pump housing

Pos.	Description
50	See Grundfos Product Center

Moisture switch

Pos.	Description	*96256056*
520	Moisture switch	1
-	Adjusting gauge	1
-	Connector 1.5	2
-	Connector 2.5	2
-	Connector AMP	2

Leakage switch

Pos.	Description	*98794478*
521	Leakage switch	1

Wear ring

Pos.	
49c	See Grundfos Product Center

Absorbent bag

Pos.	Description/Kit No	97567451
760	Absorbent bag (zeolite)	2

SE, 2-4 Poles

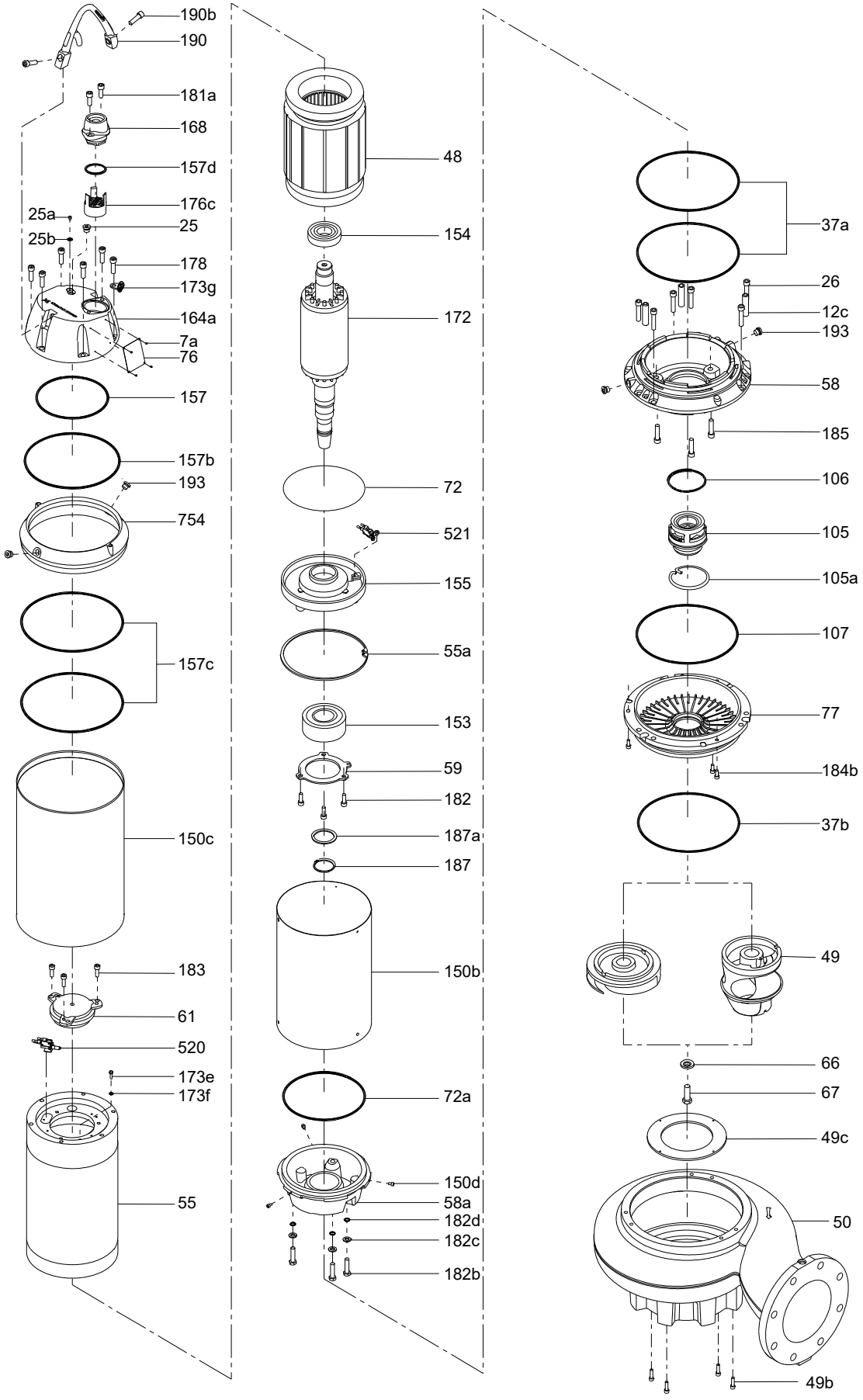
190b
190
181a
168
157d
176c
25a
25
25b
178
173g
164a
7a
76
157
157b
193
754
157c
150c
183
61
520
173e
173f
55
48
154
172
72
521
155
55a
153
59
182
187a
187
150b
72a
150d
58a
182d
182c
182b
37a
26
12c
193
58
185
106
105
105a
107
77
184b
37b
49
66
67
49c
50
49b
TM059694

SE, 6 poles

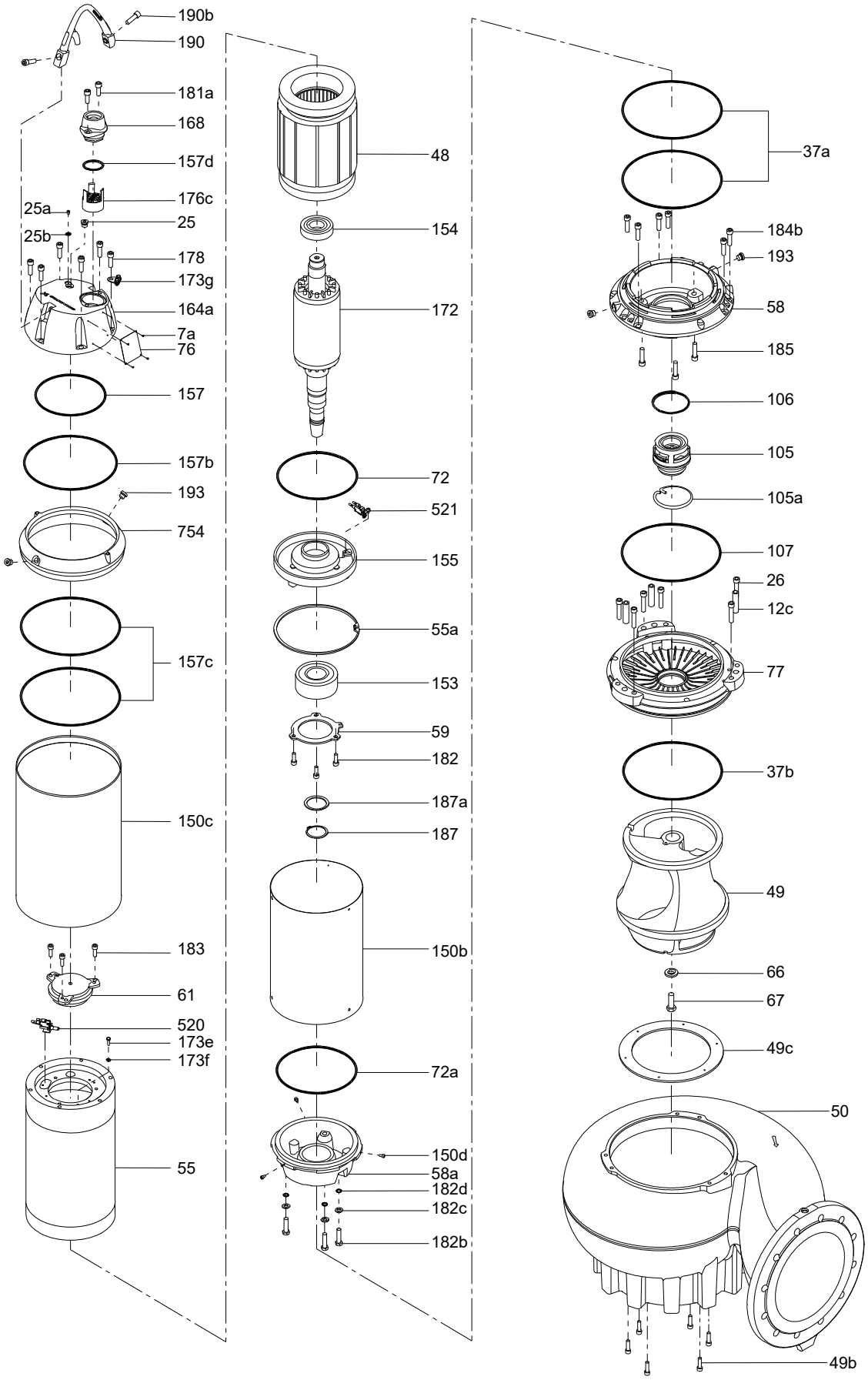
190b
190
181a
168
157d
176c
25a
25
25b
178
173g
164a
7a
76
157
157b
193
754
157c
150c
183
61
520
173e
173f
55
48
154
172
72
521
155
55a
153
59
182
187a
187
150b
72a
150d
58a
182d
182c
182b
37a
184b
193
58
185
106
105
105a
107
26
12c
77
37b
49
66
67
49c
50
49b
TM059690

O-ring set for motor

Pos.	Installation type		S		C, D and H	
	Rubber type		NBR	FKM	NBR	FKM
	Description/Kit No		*98119448*	*98119449*	*98119450*	*98119451*
37a	O-ring	307.0 x 4.0	-	-	2	2
37b	O-ring	309.3 x 5.7	1	1	1	1
		359.3 x 5.7	1	1	1	1
72	O-ring	255.0 x 4.0	1	1	1	1
72a	O-ring	239.3 x 5.7	1	1	1	1
106	O-ring	105.0 x 4.0	-	-	1	1
107	O-ring	309.3 x 5.7	1	1	1	1
157	O-ring	209.3 x 5.7	1	1	1	1
157b	O-ring	279.3 x 5.7	-	-	1	1
157c	O-ring	299.3 x 5.7	-	-	2	2
157d	O-ring	65.0 x 5.0	1	1	1	1
182d	O-ring	12.0 x 2.5	3	3	3	3

Shaft seal

Pos.	Description	Pole	2	4	6	2	4	6
		Material		1.4308			1.4517	
	Kit no		*98119100*	*98119099*	*98119098*	*98119103*	*98119102*	*98119101*
105	Shaft seal		1	1	1	1	1	1

Shaft with rotor

Pos.	Pole	4	4	2	2	2	6	4	4	2
	kW (hp)	11 (15)	15 (20)	15 (20)	18 (25)	22 (30)	15 (20)	11 (15)	15 (20)	15 (20)
	Kit No	*98119125*	*98119127*	*98119139*	*98119140*	*98119151*	*98119154*	*98119155*	*98119157*	*98119158*
172	Shaft with Rotor	1	1	1	1	1	1	1	1	1

Shaft with rotor (Ex)

Pos.	Pole	4	4	2	2	2	6
	kW (hp)	11 (15)	15 (20)	15 (20)	18.5 (25)	22 (30)	15 (20)
	Kit No	*98119155*	*98119157*	*98119158*	*98119159*	*98119161*	*98119162*
172	Shaft w. Rotor	1	1	1	1	1	1

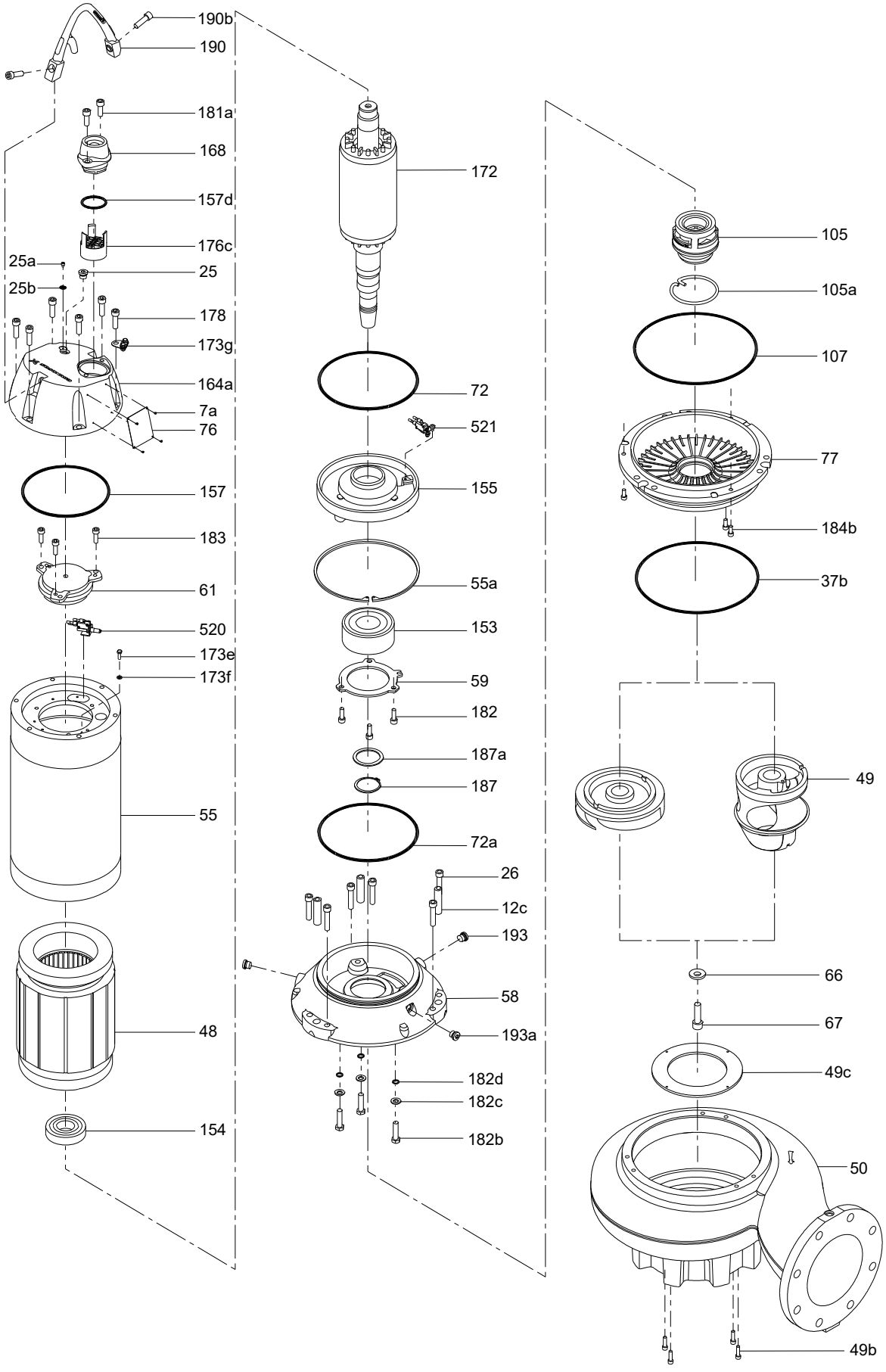
190b
190
181a
168
157d
176c
25a
25
25b
178
173g
164a
7a
76
157
183
61
520
173e
173f
55
48
154
172
72
521
155
55a
153
59
182
187a
187
72a
26
12c
193
58
193a
182d
182c
182b
105
105a
107
77
184b
37b
49
66
67
49c
50
49b
TM059688

SL, 6 poles

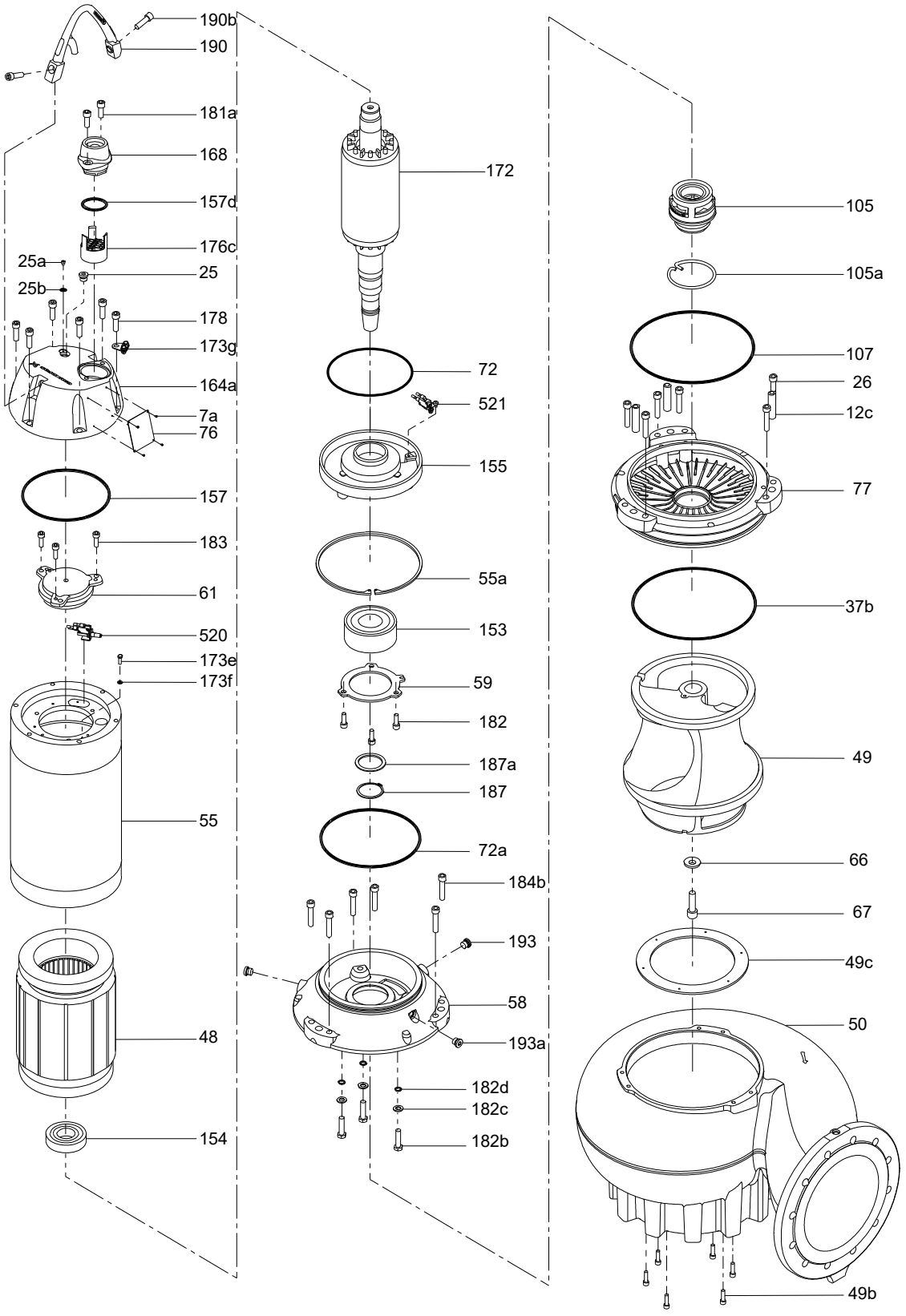
190b
190
181a
168
157d
176c
25a
25
25b
178
173g
164a
7a
76
157
183
61
520
173e
173f
55
48
154
172
72
521
155
55a
153
59
182
187a
187
72a
184b
193
58
193a
182d
182c
182b
105
105a
107
26
12c
77
37b
49
66
67
49c
50
49b
TM059692

Pump housing

For E-hydraulic, 50 Hz pumps only

Pos.	Description/Kit No	*99349067*	*99349066*
		small	large
26	Screw	6	6
50	Pump housing	1	1
-	Washer	6	6

Impeller

For E-hydraulic

Pos.	Description	Type	50 Hz				60 Hz
		Power	11 kW	13 kW	16 kW	18 kW	22 kW
		Kit No	*99349068*	*99349069*	*99349070*	*99349071*	*99349069*
49	Impeller		1	1	1	1	1
66	Screw		1	1	1	1	1
67	Washer		1	1	1	1	1

Upgrade kit

For E-hydraulic, 50 Hz pump only

Pos.	Description	Power	11 kW	13 kW	16 kW	18 kW
		Kit No	*99349072*	*99349073*	*99349074*	*99349075*
26	Screw		6	6	6	6
26c	Washer		6	6	6	6
37b	O-ring	309.3 x 5.7	1	1	-	-
		359.3 x 5.7	-	-	1	1
49	Impeller		1	1	1	1
50	Pump housing		1	1	1	1
66	Washer		1	1	1	1
67	Screw		1	1	1	1
77	Seal housing		1	1	1	1
184b	Screw		6	6	6	6
184c	Washer		6	6	6	6

Wear ring

For E-hydraulic

Pos.	Description	Hydraulic	E	L	M	H	S
		Pole	6	4	4	4	2
		Kit No	*99260100*	*99226944*	*96226928*	*99226926*	*99226924*
49b	Screw		6	5	4	3	3
49c	Wear ring		1	1	1	1	1

SL, 2-4 poles

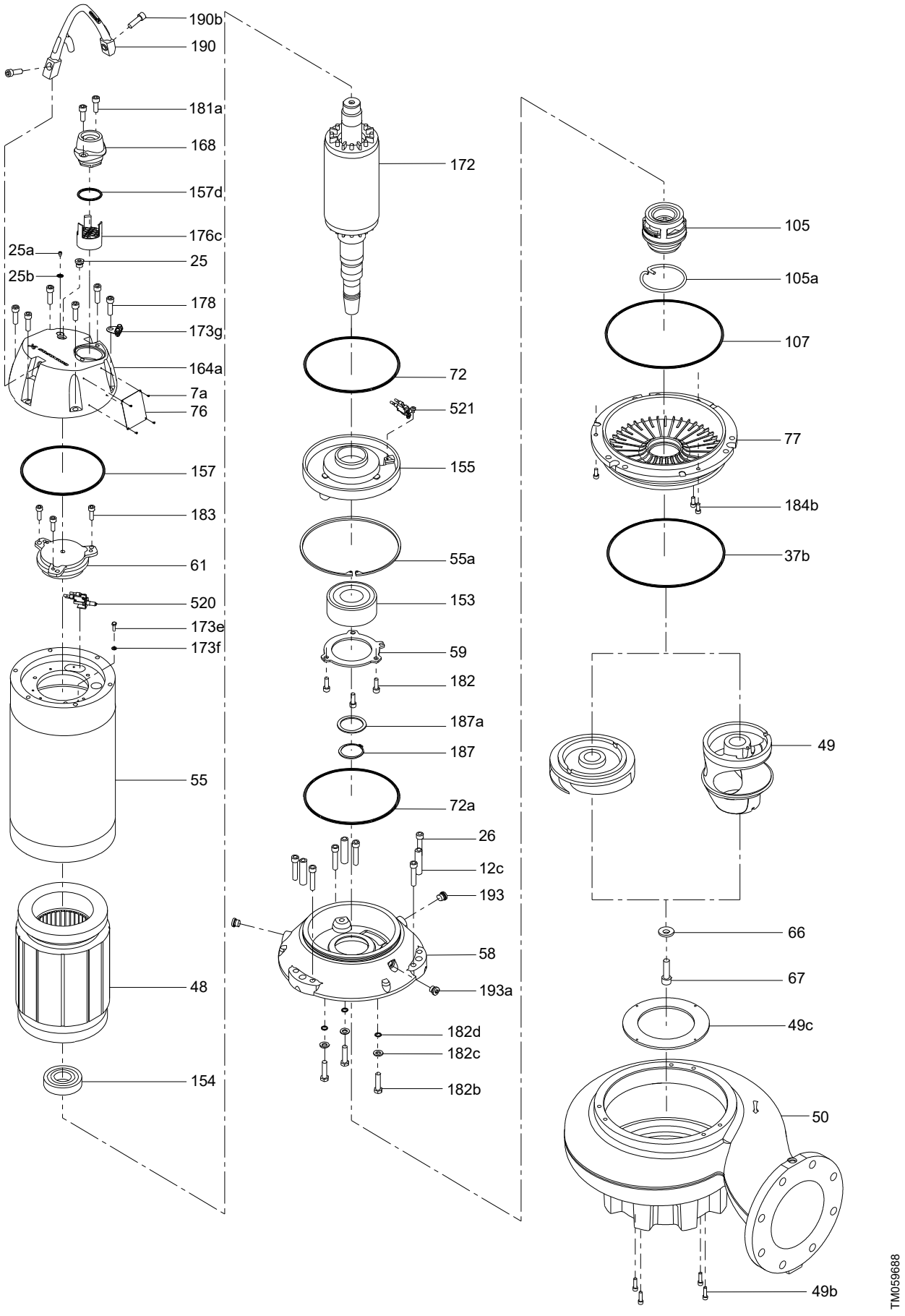
190b
190
181a
168
157d
176c
25a
25
25b
178
173g
164a
7a
76
157
183
61
520
173e
173f
55
48
154
172
72
521
155
55a
153
59
182
187a
187
72a
26
12c
193
58
193a
182d
182c
182b
105
105a
107
77
184b
37b
49
66
67
49c
50
49b
TM059688

SL, 6 poles

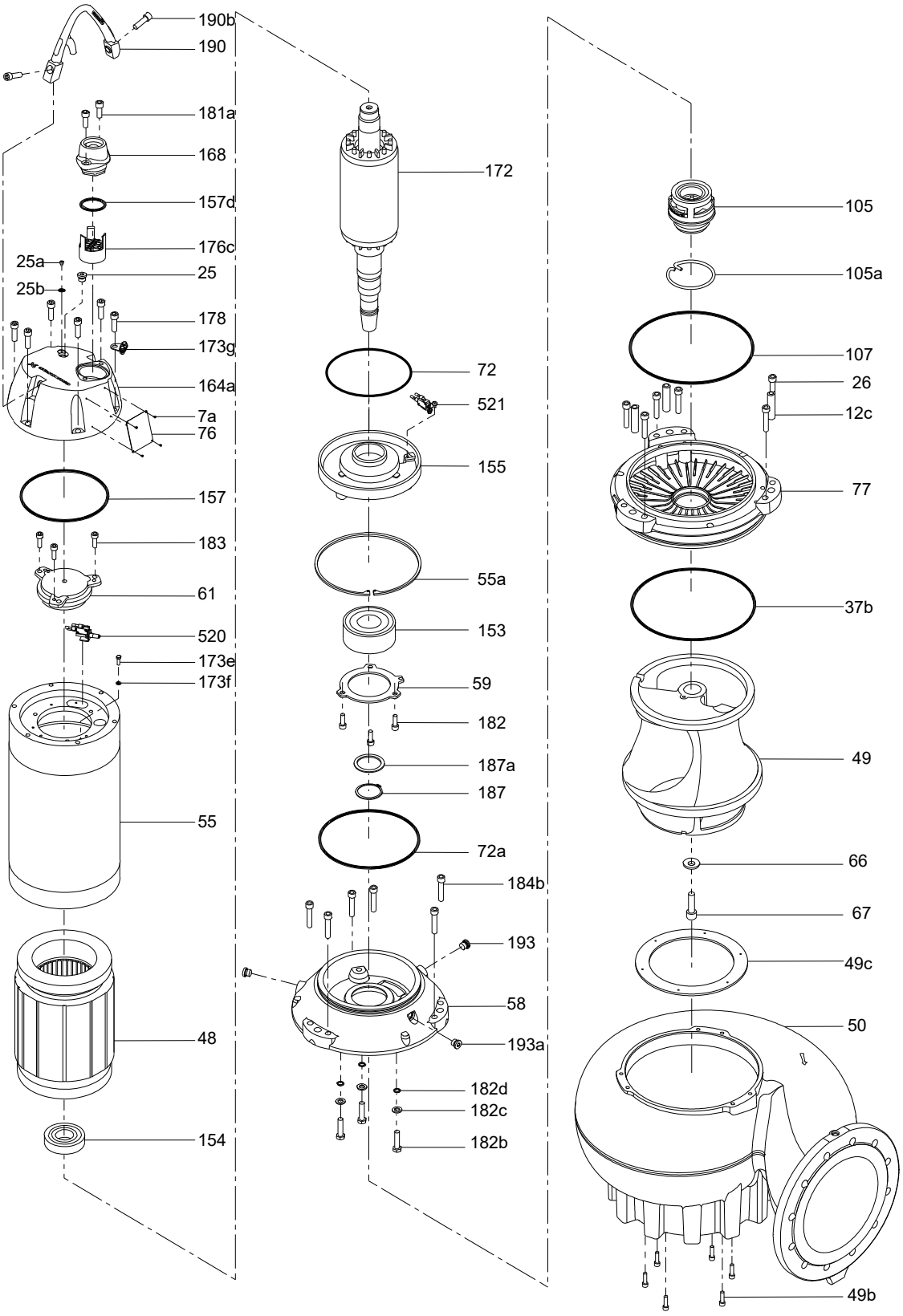
190b
190
181a
168
157d
176c
25a
25
25b
178
173g
164a
7a
76
157
183
61
520
173e
173f
55
48
154
172
72
521
155
55a
153
59
182
187a
187
72a
184b
193
58
193a
182d
182c
182b
105
105a
107
26
12c
77
37b
49
66
67
49c
50
49b
TM059692

74. SE

SE1, SEV

50/60 Hz

SE1.50 from 2.2 kW, SE1.80, SE1.100
SEV.65 from 2.2 kW, SEV.80, SEV.100

Impeller-fixing parts

Pos.	Description	2-pole	2.2 - 4.0 kW	6.0 - 11 kW
		4-pole	1.1 - 2.2 kW	3.0 - 7.5 kW
		Kit No	*96102365*	*96102366*
9a	Key		1	1
66	Washer		1	1
157	Corrugated spring		1	1
188a	Screw		1	1

Single-channel impeller

Pos.	Description	Free passage	SE1.80	SE1.50	SE1.80	SE1.50	SE1.80	SE1.50	SE1.80
		2-pole		2.2		3.0		4.0	
		4-pole	1.5		2.2		3.0		5.5
		Cast iron	*96091222*	*96091219*	*96091223*	*96091220*	*96091224*	*96091221*	*96091226*
49	Impeller		1	1	1	1	1	1	1
49c	Wear ring for impeller		1	1	1	1	1	1	1

Pos.	Description	Free passage	SE1.100	SE1.80	SE1.100
		2-pole			
		4-pole	5.5	7.5	7.5
		Cast iron	*96091229*	*96091227*	*96091230*
49	Impeller		1	1	1
49c	Wear ring for impeller		1	1	1

SuperVortex impeller

Pos.	Description	Free passage	65	80	65	80	100	65.40/80.40	80.40
		2-pole	2.2		3.0	3.0		4.0	
		4-pole		2.2			3.0		4
		Cast iron	*96886437*	*96812794*	*96886439*	*96886439*	*96886453*	*96886441*	-
		Stainless steel	-	*97759200*	-	-	*97759206*	-	*97759201*
49	Impeller		1	1	1	1	1	1	1

Pos.	Description	Free passage	100	100		80	100	80	80
		2-pole							
		4-pole	4.0	5.5	6.0	7.5	7.5	9.2	11
		Cast iron	*96886456*	*96882380*	*96812823*	*96812827*	*96882475*	*96812831*	*96812654*
		Stainless steel	*97759207*	*97759208*	*97759202*	*97759203*	*97759209*	*97759204*	*97759205*
49	Impeller		1	1	1	1	1	1	

S-tube impeller
Tube impeller "Generation A"

Pos.	Description	SE1 100.75.4
		97783819
49	Impeller 50Hz SE1.100.75.4, tube catph.	1
49C	Wear ring for impeller SE1.100	1
58	Cover for oil chamber D, D235, catap	1

SEV

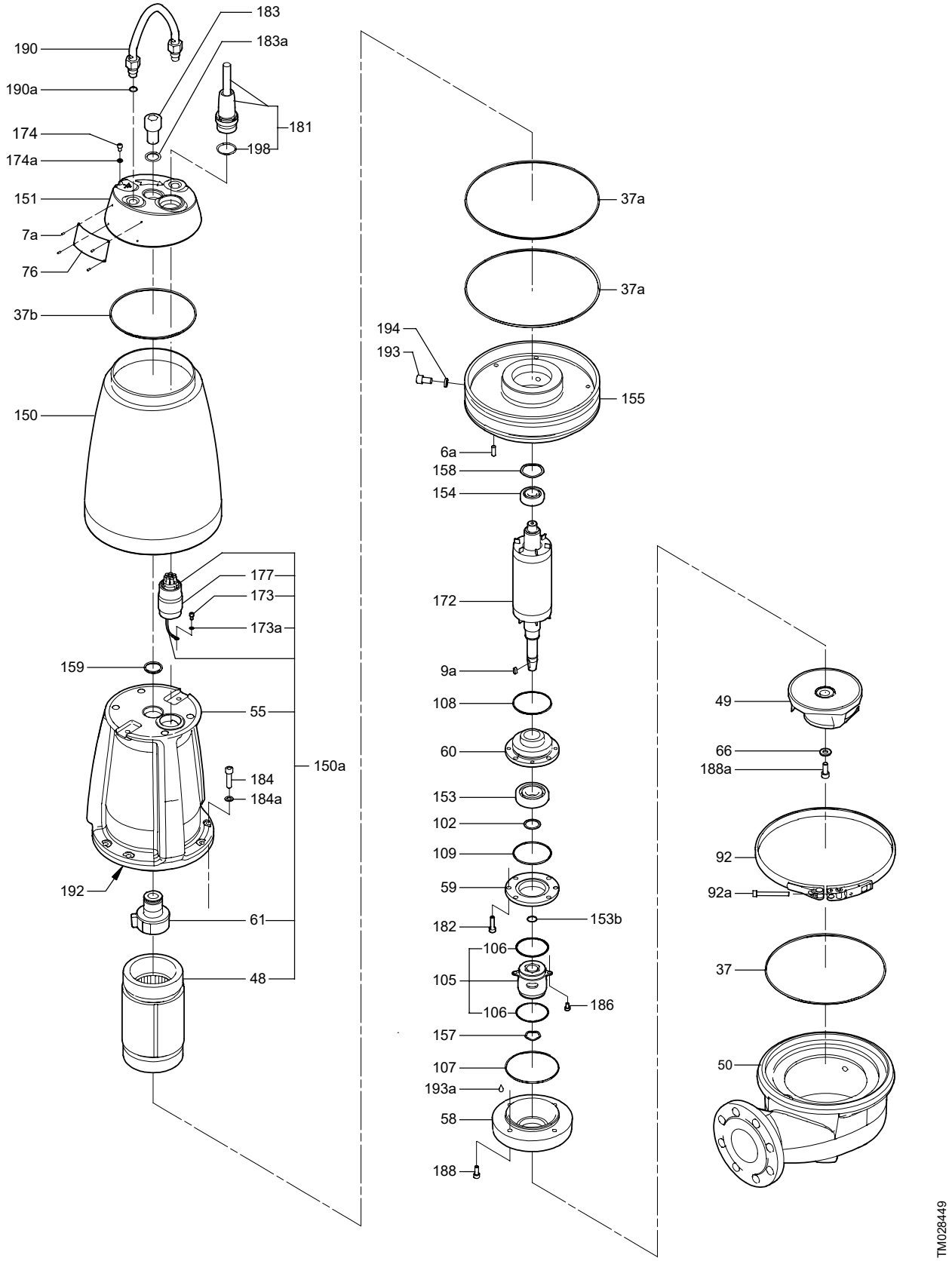
183
183a
190
190a
181
198
174
174a
151
7a
76
37b
150
177
173
173a
159
55
150a
184
184a
192
61
48
37a
37a
194
193
155
6a
158
154
172
9a
108
60
153
102
109
59
153b
182
106
105
186
106
157
107
193a
58
188
49
66
188a
92
92a
37
50
TM028449

SE1

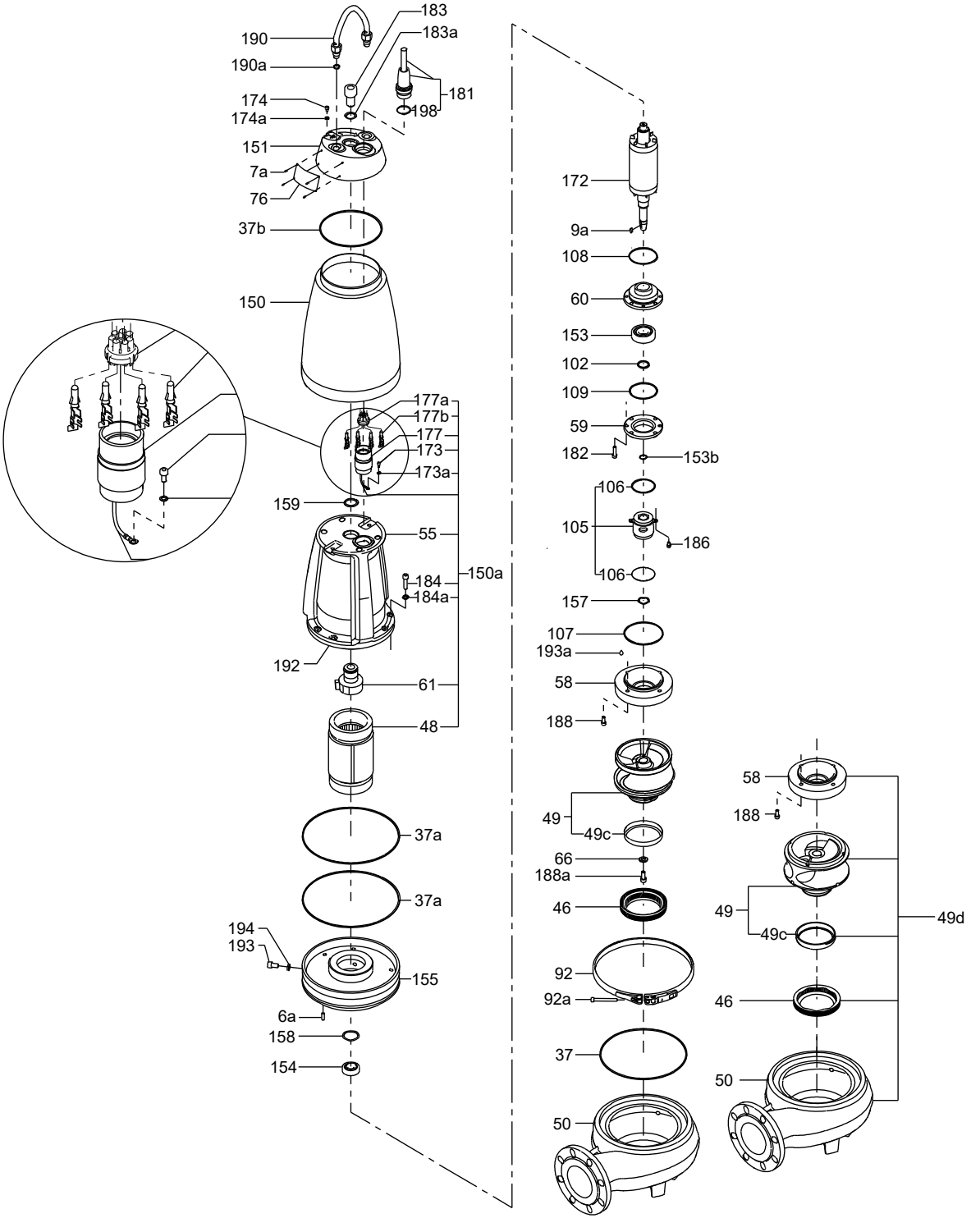
183
183a
190
190a
174
174a
181
198
151
7a
76
37b
150
177a
177b
177
173
173a
159
55
150a
184
184a
192
61
48
37a
37a
194
193
155
6a
158
154
172
9a
108
60
153
102
109
59
182
153b
106
105
186
106
157
107
193a
58
188
49
49c
66
188a
46
92
92a
37
50
58
188
49
49c
49d
46
50
TM053247

Clamp

Pos.	Description				
		2-pole	2.2-3.0 kW	4.0-7.5 kW	9.2-11 kW
		4-pole	1.1-2.2 kW	3.0-5.5 kW	7.5 kW
		Kit No	*96592061*	*96592063*	*96592064*
92	Clamp		1	1	1

Guide shoe

Pos.	Description						
		Outlet	DN 80	DN 80/100	DN 100	DN 100/150	DN 150
		Rubber type	NBR	NBR	NBR	NBR	NBR
		Kit No	*96592058*	*96611611*	*96592056*	*96611613*	*96592060*
-	Guide shoe		1	1	1	1	1
-	SmartSeal		1	1	1	1	1

Shaft seal

Pos.	Description					
		2-pole	2.2 - 4.0 kW		6.0 - 11 kW	
		4-pole	1.1 - 2.2 kW		3.0 - 7.5 kW	
		Rubber type	NBR	FKM	NBR	FKM
		Kit No	*96102360*	*96635732*	*96102361*	*96635733*
105	Shaft seal cartridge		1	1	1	1
107	O-ring	110 x 3	1	1	-	-
		134.5 x 3	1	1	1	1
		160 x 3	-	-	1	1
153b	O-ring	17.0 x 2.4	1	1	-	-
		28 x 2	-	-	1	1
157	Corrugated spring		1	1	1	1

SmartSeal for auto coupling

Description	Outlet	DN 65		DN 80/65		DN 80		DN 80/100	
	Rubber type	NBR	FKM	NBR	FKM	NBR	FKM	NBR	FKM
	Kit No	*96575022*	*96659160*	*96575023*	*96659161*	*96575024*	*96659163*	*96575025*	*96659164*
SmartSeal		1	1	1	1	1	1	1	1

Description	Outlet	DN 100		DN 100/150		DN 150	
	Rubber type	NBR	FKM	NBR	FKM	NBR	FKM
	Kit No	*96575027*	*96659165*	*96575028*	*96659166*	*96575029*	*96659167*
SmartSeal		1	1	1	1	1	1

Upper guide rail holder

Pos.	Kit No	*96592037*	*96829357*	*96592038*	*96829358*
	Description	DN 65/DN 80	DN 65/DN 80	DN 100/DN 150	DN 100/DN 150
-	Upper guide rail holder	1	1	1	1
		Before 1044 cast iron	After 1044 st.steel	Before 1044 cast iron	After 1044 st.steel

SEV

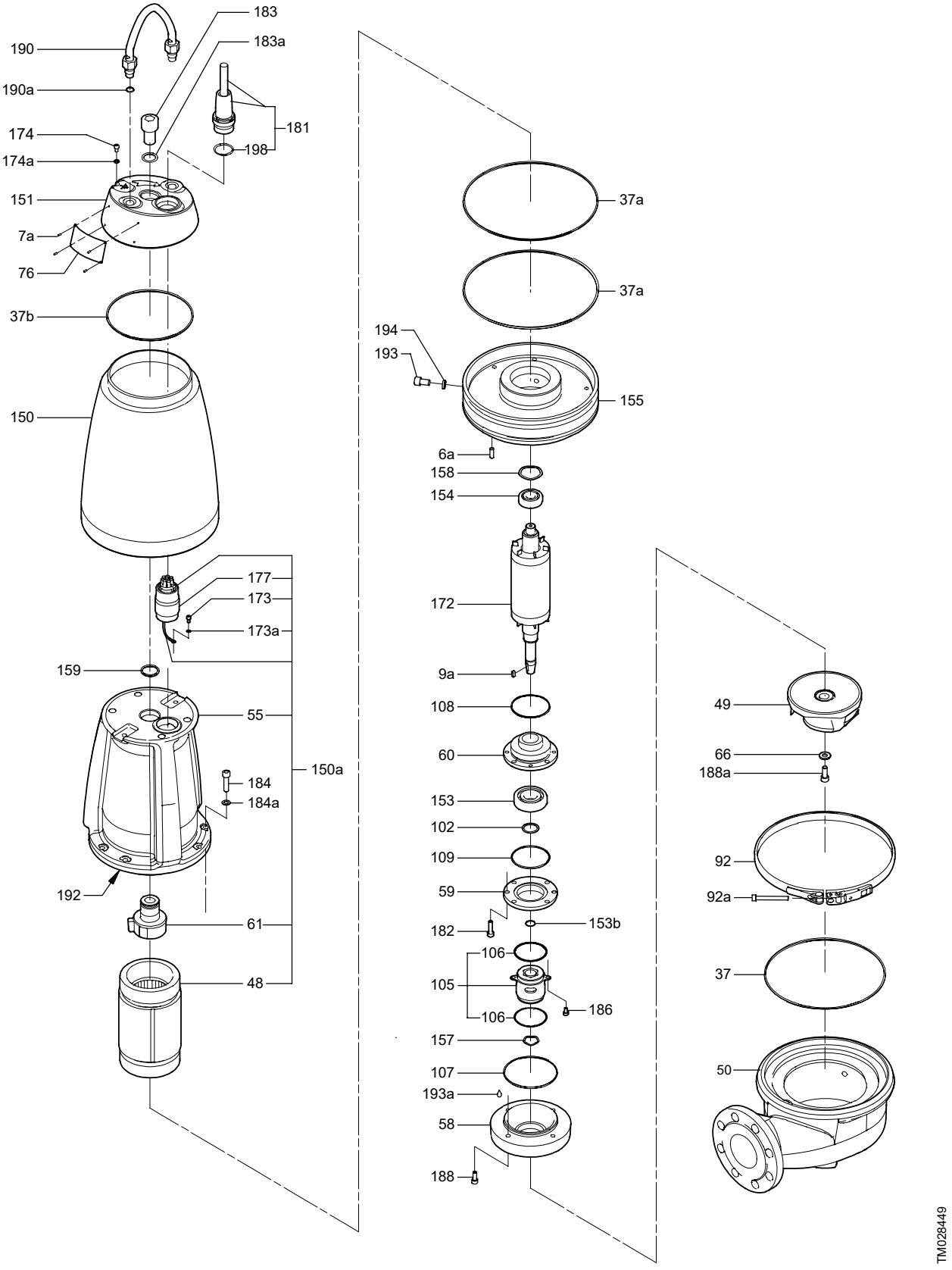
183
183a
190
190a
174
174a
181
198
151
7a
76
37b
150
177
173
173a
159
55
150a
184
184a
192
61
48
37a
37a
194
193
155
6a
158
154
172
9a
108
60
153
102
109
59
182
153b
106
105
186
106
157
107
193a
58
188
49
66
188a
92
92a
37
50
TM028449

SE1

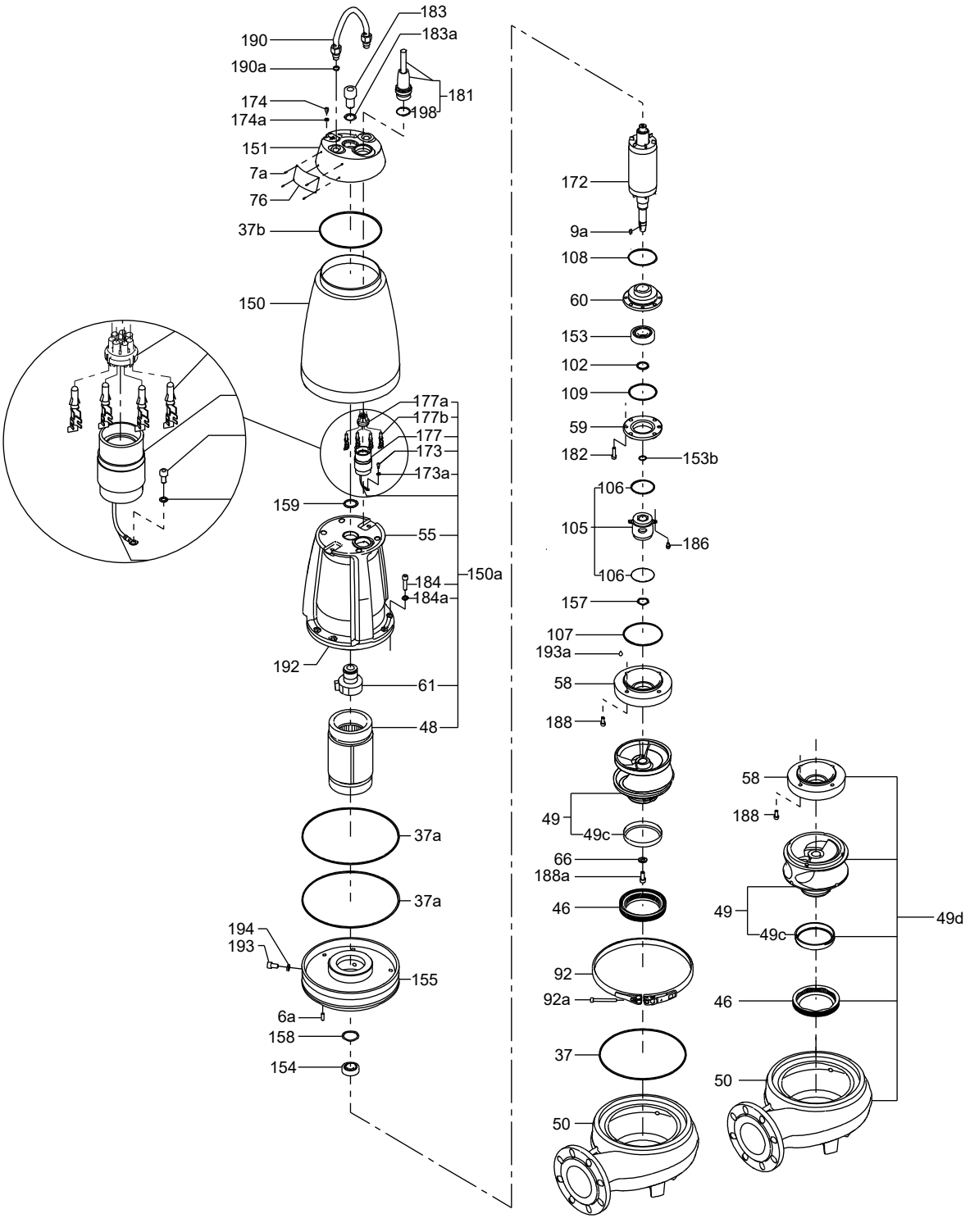
183
183a
190
190a
174
174a
181
198
151
7a
76
37b
150
177a
177b
177
173
173a
159
55
184
184a
150a
192
61
48
37a
37a
194
193
155
6a
158
154
172
9a
108
60
153
102
109
59
182
153b
106
105
186
106
157
107
193a
58
188
49
49c
66
188a
46
92
92a
37
50
58
188
49
49c
49d
46
50
TM053247

Bearing

Pos.	Description	2-pole	2.2 - 3 kW	4 - 7.5 kW	9.2 - 11 kW
		4-pole	1.1 - 2.2 kW	3 - 5.5 kW	7.5 kW
		Kit No	*96690703*	*96690704*	*96690705*
153	Bearing		1	1	1
154	Bearing		1	1	1

Lifting bracket

Pos.	Description	2-pole	2.2 - 3 kW		6 - 7.5 kW		9.2 - 11 kW	
		4-pole	1.1 - 2.2 kW		3 - 5.5 kW		7.5 kW	
		Material	1.4301	1.4401	1.4301	1.4401	1.4301	1.4401
		Kit No	*96690430*	*96690431*	*96690432*	*96690434*	*96690436*	*96690437*
190	Lifting bracket		1	1	1	1	1	1

O-ring

Pos.	Description	2-pole	2.2 - 3 kW		4 kW		6 - 7.5 kW		9.2 - 11 kW	
		4-pole	1.1 - 2.2 kW		-		3 - 5.5 kW		7.5 kW	
		Rubber type	NBR	FKM	NBR	FKM	NBR	FKM	NBR	FKM
		Kit No	*96102367*	*96788975*	*96102368*	*96788977*	*96102369*	*96788976*	*96102370*	*96788978*
37	O-ring	250 x 4	1	1	-	-	-	-	-	-
		297 x 4	-	-	1	1	1	1	-	-
		330 x 4	-	-	-	-	-	-	1	1
37a	O-ring	285 x 4	2	2	-	-	-	-	-	-
		330 x 4	-	-	2	2	2	2	-	-
		346 x 4	-	-	-	-	-	-	2	2
37b	O-ring	185 x 4	1	1	-	-	-	-	-	-
		225 x 4	-	-	1	1	1	1	-	-
		250 x 4	-	-	-	-	-	-	1	1
102	O-ring	17.3 x 2.4	1	1	1	1	-	-	-	-
		28 x 2	-	-	-	-	1	1	1	1
106	O-ring	50 x 3	2	2	2	2	-	-	-	-
		62 x 3	-	-	-	-	2	2	2	2
107	O-ring	110 x 3	1	1	-	-	-	-	-	-
		134.5 x 3	-	-	1	1	1	1	-	-
		160 x 3	-	-	-	-	-	-	1	1
108	O-ring	80 x 3	1	1	-	-	-	-	-	-
		100 x 3	-	-	1	1	1	1	-	-
		120 x 3	-	-	-	-	-	-	1	1
109	O-ring	80 x 3	1	1	-	-	-	-	-	-
		100 x 3	-	-	1	1	1	1	1	1
159	O-ring	34 x 4	1	1	-	-	-	-	-	-
		41 x 4	-	-	1	1	1	1	1	1
183a	Washer	26/34 x 2	1	1	-	-	-	-	-	-
		33/38 x 2	-	-	1	1	1	1	1	1
194	Sealing washer	12.2/19 x 4.4	2	2	-	-	2	2	2	2
198	O-ring	34.2 x 3	1	1	-	-	-	-	-	-
		42.2 x 3	-	-	1	1	1	1	1	1

Top bolt

Pos.	Description	Size	M24	M30
		Kit No	*96690572*	*96690573*
183	Screw		1	1
183a	Washer		1	1

SEV

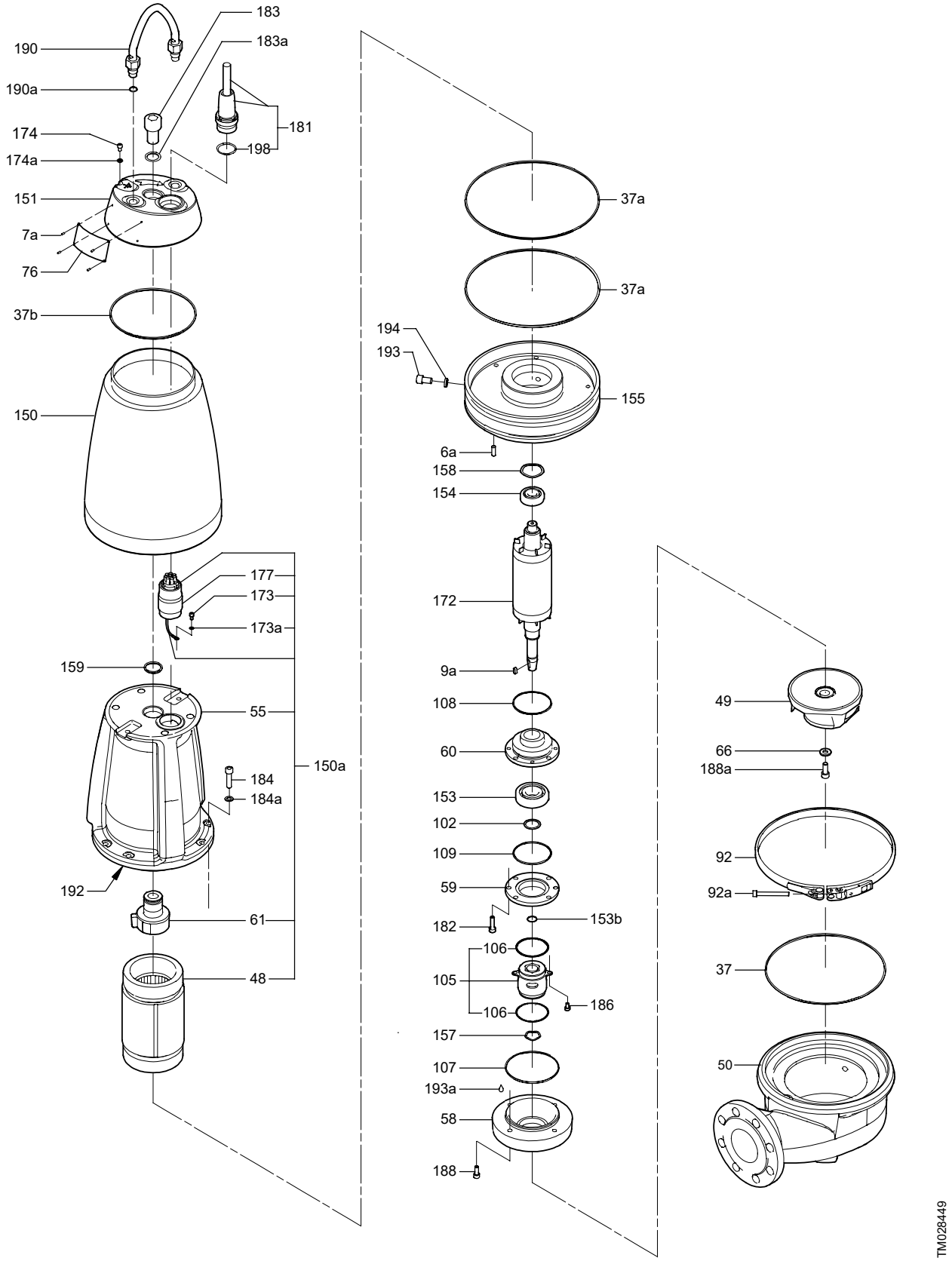
183
183a
190
190a
181
198
174
174a
151
7a
76
37b
150
177
173
173a
159
55
150a
184
184a
192
61
48
37a
37a
194
193
155
6a
158
154
172
9a
108
60
153
102
109
59
153b
182
106
105
186
106
157
107
193a
58
188
49
66
188a
92
92a
37
50
TM028449

SE1

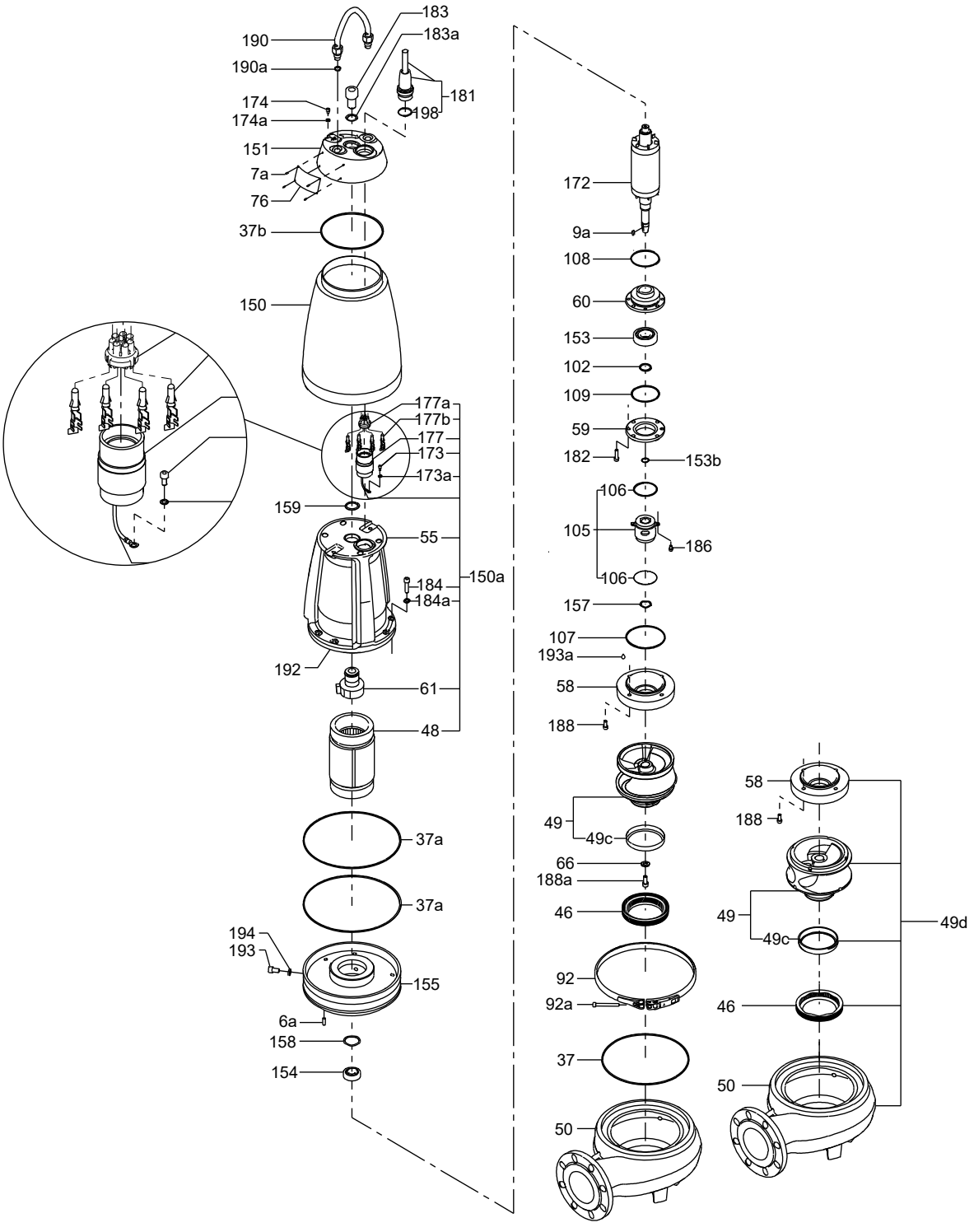
183
183a
190
190a
174
174a
181
198
151
7a
76
37b
150
177a
177b
177
173
173a
159
55
184
184a
150a
192
61
48
37a
37a
194
193
155
6a
158
154
172
9a
108
60
153
102
109
59
182
153b
106
105
186
106
157
107
193a
58
188
49
49c
66
188a
46
92
92a
37
50
58
188
49
49c
49d
46
50
TM053247

Cable

2-pole: 2.2 - 3 kW, 4-pole: 1.1 - 2.2 kW

Pos.	Length	10 m			15 m		
	Type	Standard	Ex	Screened Ex	Standard	Ex	Screened Ex
	Description						
181	Cable	*96591649*	*96689976*	*96102486*	*96659473*	*96689977*	*96689980*

Pos.	Length	20 m			25 m		
	Type	Standard	Ex	Screened Ex	Standard	Ex	Screened Ex
	Description						
181	Cable	*96591660*	*96689978*	*96102488*	*96689953*	*96689979*	*96102489*

2-pole: 4 - 7.5 kW, 9.2 - 11 kW, 4-pole: 3 - 5.5 kW, 7.5 kW

Pos.	Length	10 m							
	Type	Standard			Ex			Screened Ex D	Screened Ex Y
	Description	7G 2.5 + 3 x 1 mm²	4G 2.5 + 3 x 1 mm² D	4G 2.5 + 3 x 1 mm² Y	7G 2.5 + 3 x 1 mm²	4G 2.5 + 3 x 1 mm² D	4G 2.5 + 3 x 1 mm² Y		
181	Cable	*96689954*	*96689958*	*96689972*	*96102482*	*96102498*	*96102494*	*96102490*	*96769058*

Pos.	Length	15 m							
	Type	Standard			Ex			Screened Ex D	Screened Ex Y
	Description	7G 2.5 + 3 x 1 mm²	4G 2.5 + 3 x 1 mm² D	4G 2.5 + 3 x 1 mm² Y	7G 2.5 + 3 x 1 mm²	4G 2.5 + 3 x 1 mm² D	4G 2.5 + 3 x 1 mm² Y		
181	Cable	*96689955*	*96689959*	*96689973*	*96102483*	*96102499*	*96102495*	*96102491*	*96769060*

Pos.	Length	20 m							
	Type	Standard			Ex			Screened Ex D	Screened Ex Y
	Description	7G 2.5 + 3 x 1 mm²	4G 2.5 + 3 x 1 mm² D	4G 2.5 + 3 x 1 mm² Y	7G 2.5 + 3 x 1 mm²	4G 2.5 + 3 x 1 mm² D	4G 2.5 + 3 x 1 mm² Y		
181	Cable	*96689956*	*96689970*	*96689974*	*96102484*	*96102500*	*96102496*	*96102492*	*96769061*

Pos.	Length	25 m							
	Type	Standard			Ex			Screened Ex D	Screened Ex Y
	Description	7G 2.5 + 3 x 1 mm²	4G 2.5 + 3 x 1 mm² D	4G 2.5 + 3 x 1 mm² Y	7G 2.5 + 3 x 1 mm²	4G 2.5 + 3 x 1 mm² D	4G 2.5 + 3 x 1 mm² Y		
181	Cable	*96689957*	*96689971*	*96689975*	*96102485*	*96102501*	*96102497*	*96102493*	*96769062*

Pin housing

Pos.	Description	Kit No
177	Pin housing with 7 poles	*96778908*
	Pin housing with 10 poles	*96778912*

WIO sensor

Pos.	Description	2-pole	2.2 - 3 kW	6 - 7.5 kW	9.2 - 11 kW
		4-pole	1.1 - 2.2 kW	3 - 5.5 kW	7.5 kW
		Kit No	***96617002***	***96617001***	***96616244***
	Disc, spring		4	4	4
521	Rubber bush		1	1	1
	Sensor unit complete		1	1	1

SEV

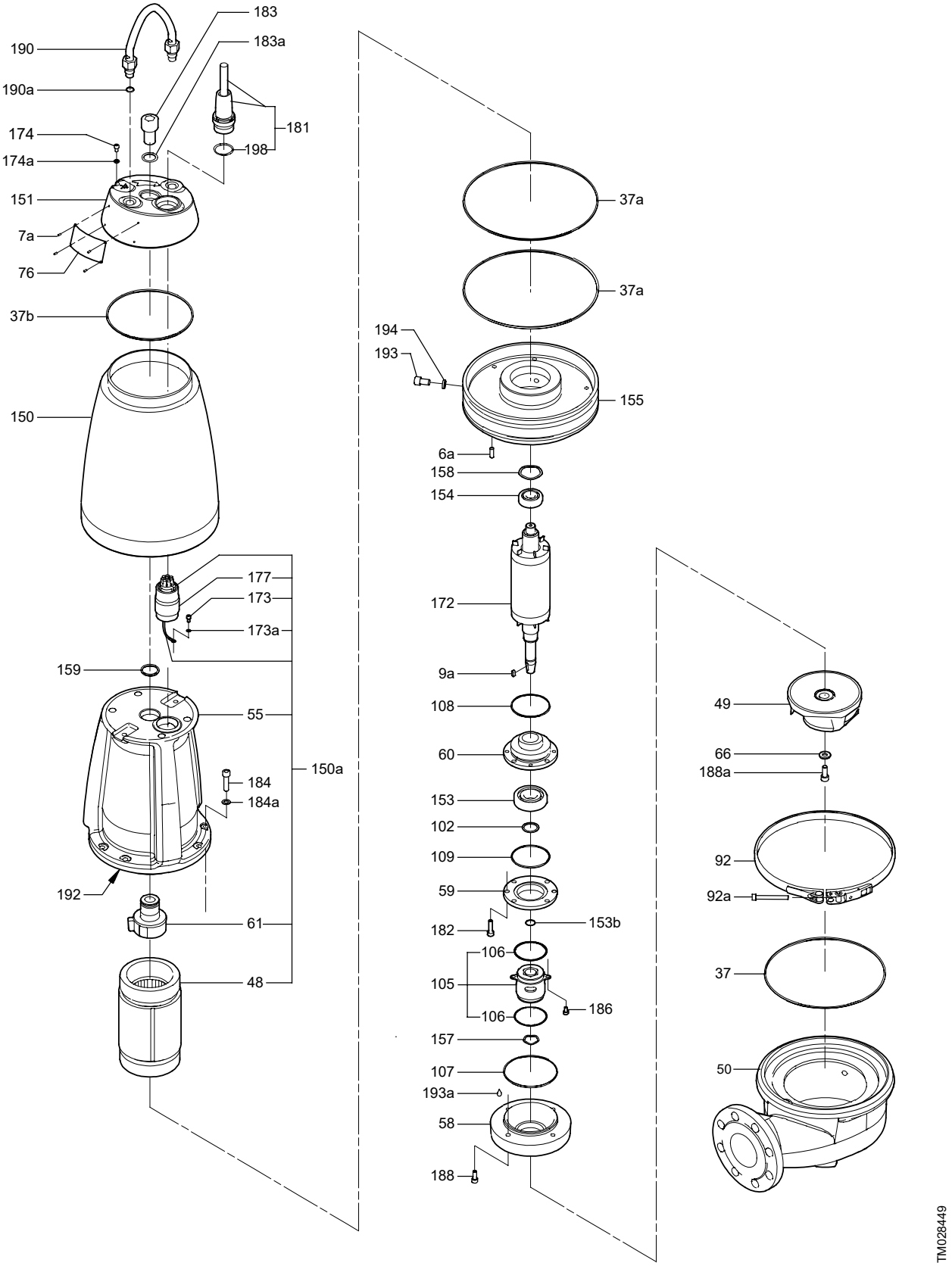
183
183a
190
190a
174
174a
181
198
151
7a
76
37b
150
177
173
173a
159
55
150a
184
184a
192
61
48
37a
37a
194
193
155
6a
158
154
172
9a
108
60
153
102
109
59
153b
182
106
105
186
106
157
107
193a
58
188
49
66
188a
92
92a
37
50
TM028449

SE1

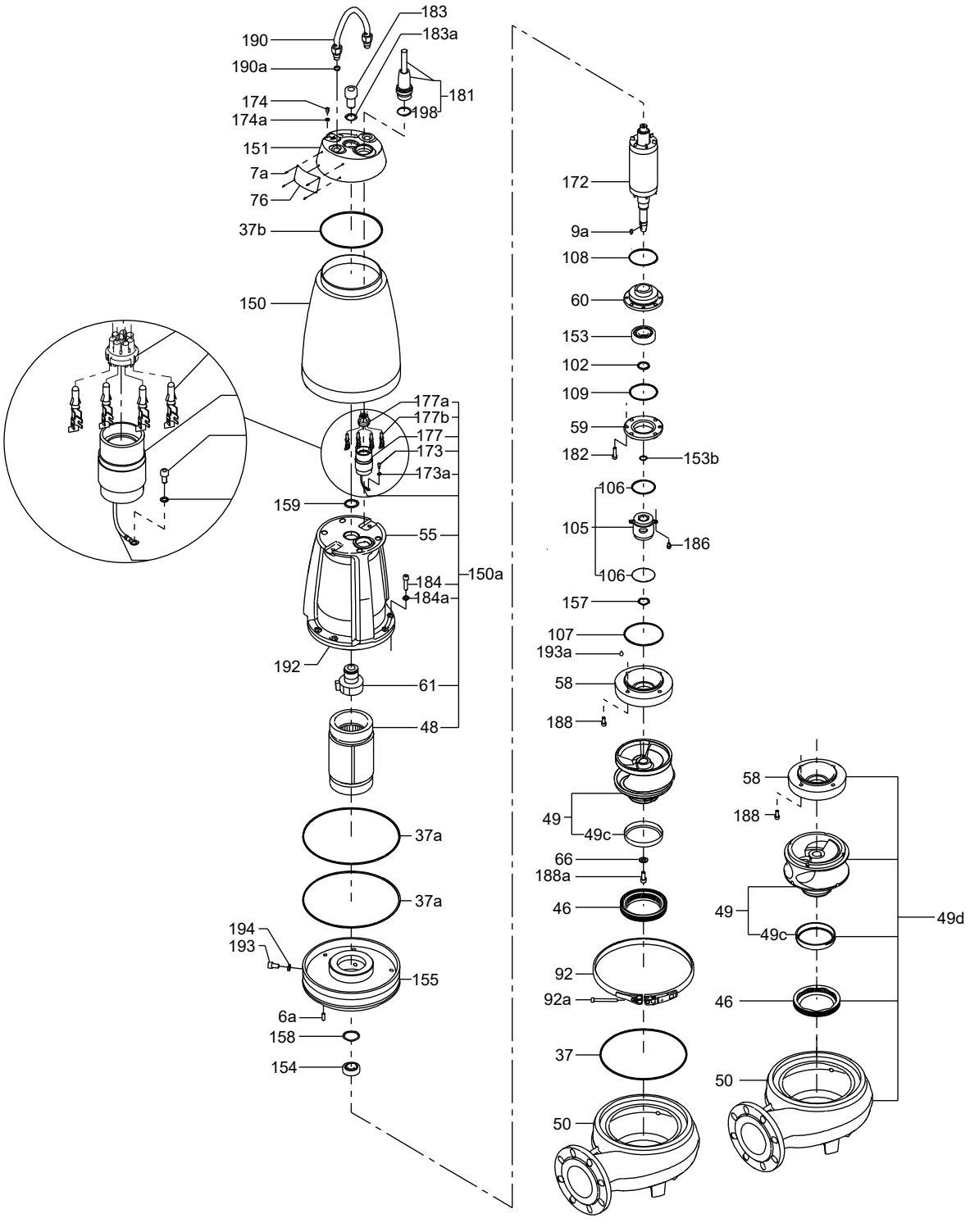
183
190
183a
190a
181
174
198
174a
151
7a
76
37b
150
177a
177b
177
173
173a
159
55
150a
184
184a
192
61
48
37a
37a
194
193
155
6a
158
154
172
9a
108
60
153
102
109
59
182
153b
106
105
186
106
157
107
193a
58
188
49
49c
66
188a
46
92
92a
37
50
58
188
49
49c
49d
46
50
TM053247

75. SEG

50 Hz/ 60 Hz / 60 Hz US

Impeller - 50 Hz

Pos.	Description		SEG.40						SEG.50		
			0.9 kW	1.2 kW	1.5 kW	2.6 kW	3.1 kW	4.0 kW	2.6 kW	3.1 kW	4.0 kW
	Kit No		*96076115*	*96076116*	*96076117*	*96076118*	*96076119*	*96076120*	99346032	99346046	99346048
9a	Key	5 x 5 x 12	1	1	1	-	-	-	-	-	-
		6 x 6 x 14	-	-	-	1	1	1	1	1	1
49	Impeller		1	1	1	1	1	1	1	1	1
66	Locking ring		1	1	1	1	1	1	1	1	1
68	Adjustment nut		1	1	1	1	1	1	1	1	1
188a	Screw		1	1	1	1	1	1	1	1	1

Impeller - 60 Hz

Pos.	Description		SEG.(K)40						SEG.(K)50		
			0.9 kW	1.2 kW	1.5 kW	2.6 kW	3.1 kW	4.0 kW	2.6 kW	3.1 kW	4.0 kW
	Kit No		*98453205*	*98453203*	*98453192*	*98453178*	*98453177*	*98453174*	*98453206*	*98453179*	*98453172*
9a	Key	5 x 5 x 12	1	1	1	-	-	-	-	-	-
		6 x 6 x 14	-	-	-	1	1	1	1	1	1
49	Impeller		1	1	1	1	1	1	1	1	1
66	Locking ring		1	1	1	1	1	1	1	1	1
68	Adjustment nut		1	1	1	1	1	1	1	1	1
188a	Screw		1	1	1	1	1	1	1	1	1

Impeller - 60 Hz US

Pos.	Description		SEG.A15				SEG.A20		
			2.0 hp	3.0 hp	4.0 hp	5.5 hp	3.0 hp	4.0 hp	5.5 hp
	Kit No		*98453192*	*98588986*	*98453177*	*98453174*	*98453191*	*98453179*	*98453172*
9a	Key	5 x 5 x 12	1	-	-	-	-	-	-
		6 x 6 x 14	-	1	1	1	1	1	1
49	Impeller		1	1	1	1	1	1	1
66	Locking ring		1	1	1	1	1	1	1
68	Adjustment nut		1	1	1	1	1	1	1
188a	Screw		1	1	1	1	1	1	1

O-ring

Pos.	Description		0.9 - 1.5 kW / 2.0 hp		2.6 - 4.0 kW / 3.0 - 5.5 hp	
			NBR	FKM	NBR	FKM
	Kit No		*96076124*	*96646061*	*96076125*	*96646062*
16	O-ring	34.2 x 3.0	1	-	1	1
26a	O-ring	32.0 x 4.0	1	1	1	1
37	O-ring	164.5 x 3.0	1	1	-	-
		204.0 x 3.0	-	-	1	1
37a	O-ring	114.0 x 3.0	2	2	-	2
		144.3 x 5.7	-	-	2	2
90b	O-ring	180.0 x 2.0	-	1	-	1
102	O-ring	16.0 x 1.5	1	1	-	-
		17.3 x 2.4	-	-	1	1
107	O-ring	47.0 x 3.0	1	1	-	-
		50.0 x 3.0	-	-	1	-
		90.0 x 4.0	-	-	-	1
108	O-ring	50.0 x 3.0	1	1	2	2
153b	O-ring	28.0 x 2.0	1	1	-	1
159	O-ring	32.0 x 2.0	1	1	-	-
		37.0 x 2.0	1	1	-	-
		52.0 x 3.0	-	-	1	1
185	O-ring	31.0 x 2.0	1	-	1	-
194	Sealing washer		2	2	2	2
198	O-ring	34.2 x 3.0	-	1	-	1
-	Bush for shaft seal		1	1	-	-

Sphere for hook-up - 50 Hz

Pos.	Description	DN 40 / Rp 1 1/2		DN 50 / Rp 2	
	Rubber type	NBR	FKM	NBR	FKM
	Kit No	*96592033*	*96657776*	*96592034*	*96657778*
-	Sphere for hook-up	1	1	1	1

2.6 to 4.0 kW / 3.0 to 5.5 hp

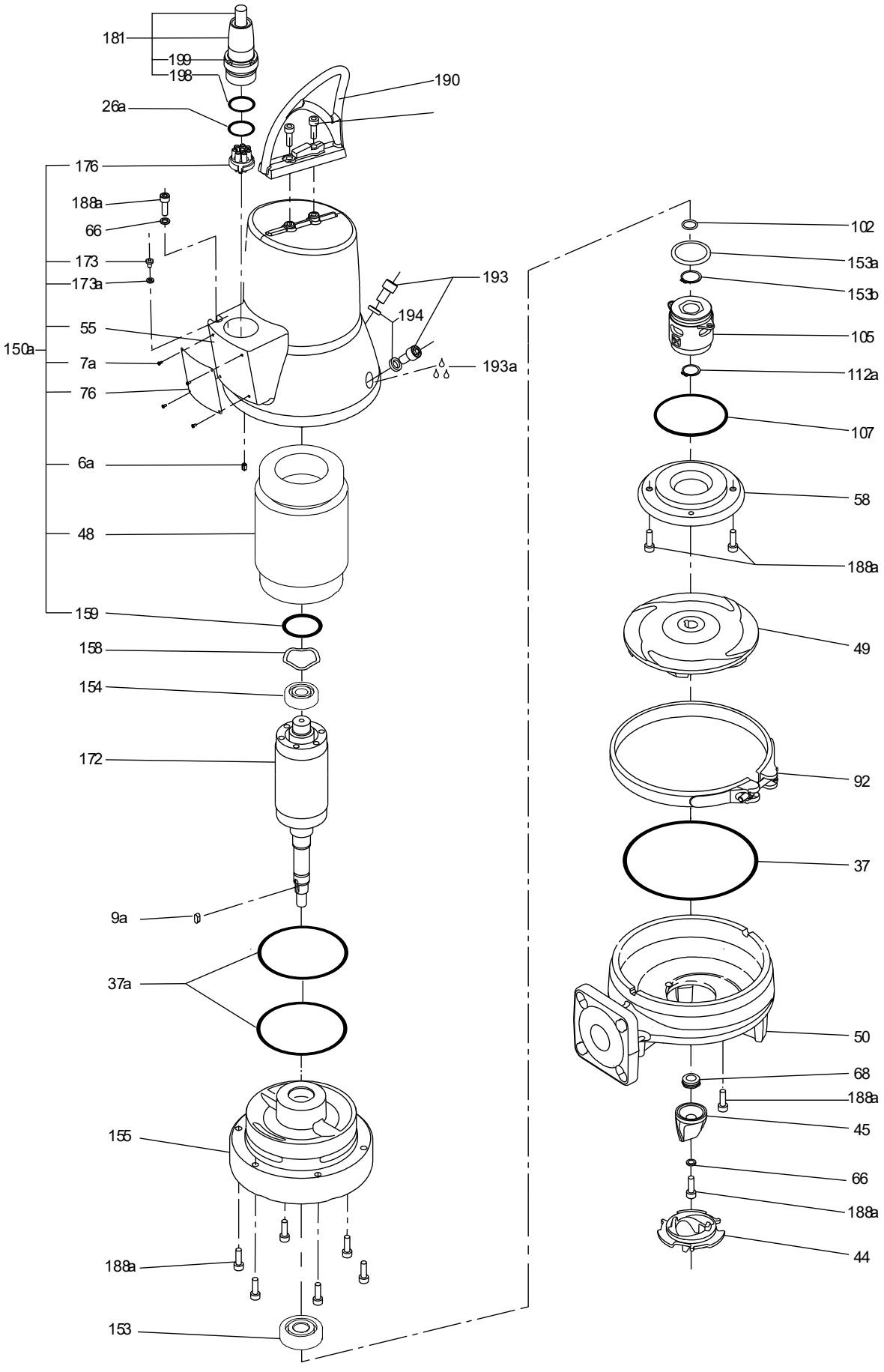

Up to 1.5 kW / 2.0 hp

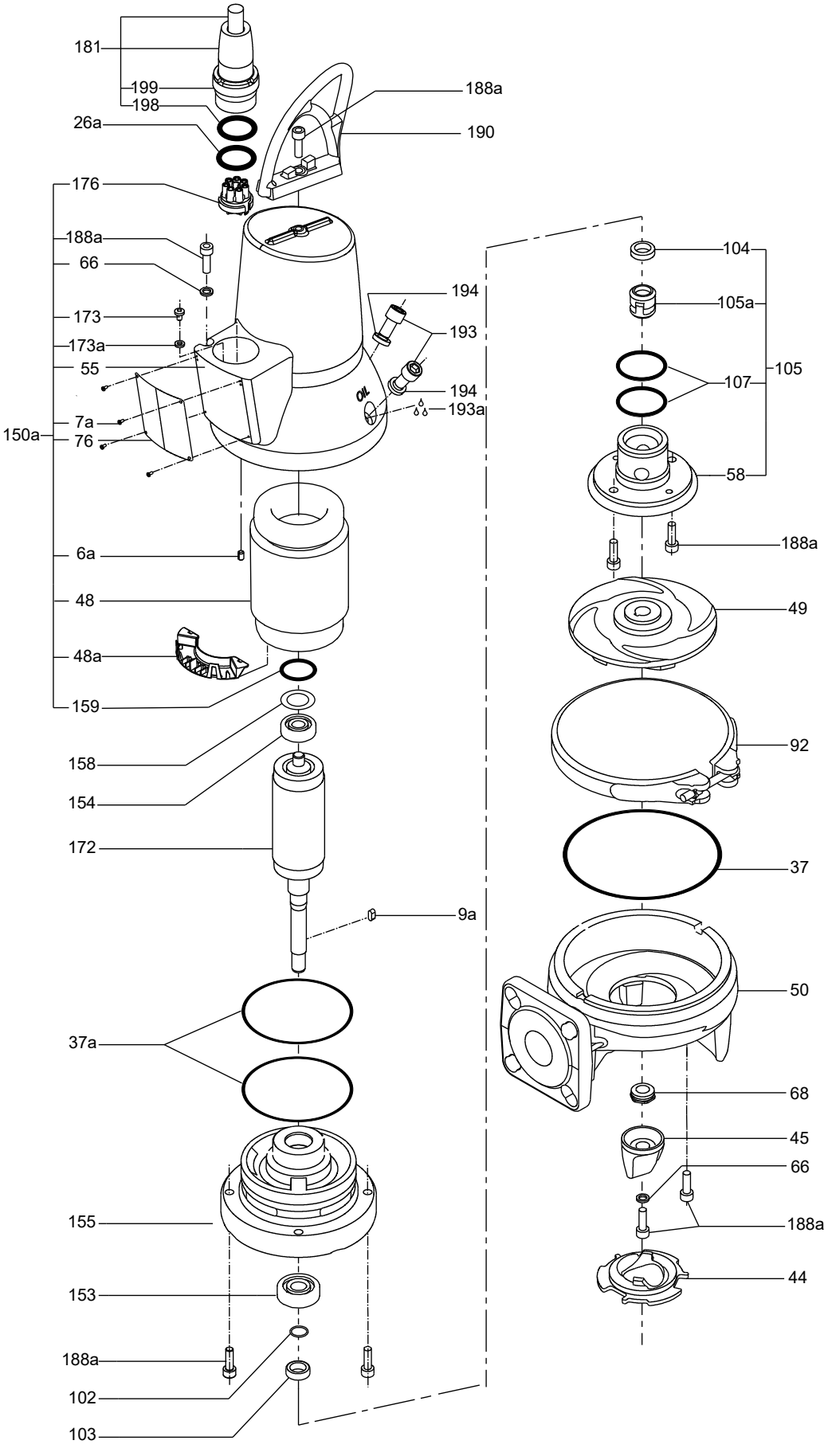

Shaft seal

Pos.	Description		SEG.(K)40		SEG.(K)50		SEG.A15		SEG.A20	
			0.9-1.5 kW	2.6-4.0 kW	0.9-1.5 kW	2.6-4.0 kW	2.0 hp	3.0-5.5 hp	2.0 hp	3.0-5.5 hp
	Rubber type		NBR	FKM	NBR	FKM	NBR	FKM	NBR	FKM
	Kit No		96076122	96645160	96076123	96645275	96076122	96645160	96076123	96645275
9a	Key	5 x 5 x 12	1	1	-	-	1	1	-	-
		6 x 6 x 14	-	-	1	1	-	-	1	1
37	O-ring	164.5 x 3.0	1	1	-	-	1	1	-	-
		204.0 x 3.0	-	-	1	1	-	-	1	1
58	Shaft seal retainer		1	-	-	-	1	-	-	-
66	Lock washer		1	1	1	1	1	1	1	1
102	O-ring	16.0 x 1.5	1	1	-	-	1	1	-	-
		17.3 x 2.4	-	-	1	1	-	-	1	1
103	Bush for seal ring		1	1	-	-	1	1	-	-
104	Seal ring		1	-	-	-	1	-	-	-
105	Shaft seal cartridge		1	1	1	1	1	1	1	1
107	O-ring	47.0 x 3.0	2	-	-	-	2	-	-	-
		90.0 x 4.0	-	-	1	1	-	-	1	1
112a	Retaining ring		-	-	1	1	-	-	1	1
188a	Screw		1	1	1	1	1	1	1	1
194	Sealing washer		2	2	2	2	2	2	2	2
-	Bush for shaft seal		1	1	-	-	1	1	-	-

Grinder

Pos.	Description	SEG.(K)40		SEG.(K)50	SEG.A15		SEG.20
		standard	heavy duty	heady duty	standard	heavy duty	standard
	Kit No	96076121	96903344	98453210	96076121	96903344	98453210
44	Grinder ring	1	1	1	1	1	1
45	Grinder head	1	1	1	1	1	1
66	Lock washer	1	1	1	1	1	1
188a	Screw	1	1	1	1	1	1

Cable - 50 Hz

Pos.	Description	Length	10 m		15 m		20 m		25 m	
		Type	Standard	Ex	Standard	Ex	Standard	Ex	Standard	Ex
181	Cable		96591649	96689976	96659473	96689977	96591660	96689978	96689953	96689979

Cable - 60 Hz

Pos.	Description	SEG.(K)40/50				SEG.A15/20			
		10 m	15 m	20 m	25 m	33 ft	49 ft	66ft	82 ft
181	Cable	97634728	97634909	97634910	97634911	97634728	97634909	97634910	97634911

Cable plug

Pos.	Description	Type size	Connection	Kit No
176	Plug for power connection	0.9-1.5 kW / 2.0 hp	Y	96747254
		2.6 kW / 3.0 hp	-	96747255
		0.9-1.5 kW / 2.0 hp	D	96747257
		0.9-1.2 kW	1-phase	96747258

Lifting bracket

Pos.	Description	0.9 - 1.5 kW	2.6 - 4.0 kW	2.0 hp	3.0 - 5.5 hp
	Kit No	*96690420*	*96690428*	*96690420*	*96690428*
188a	Screw	1	1	1	1
190	Lifting bracket	1	1	1	1

Shaft with rotor - 50 Hz

High flow variants only.

Pos.	Description	2.6 kW		3.1 - 4.0 kW	
		standard	Ex	standard	Ex
	Kit No	*99346054*	*99346055*	*99346058*	*99346091*
172	Shaft with rotor	1	1	1	1

Shaft seal carrier- 50 Hz

High flow variants only.

Pos.	Description/Kit No	99346051
58	Shaft seal carrier	1

2.6 to 4.0 kW / 3.0 to 5.5 hp

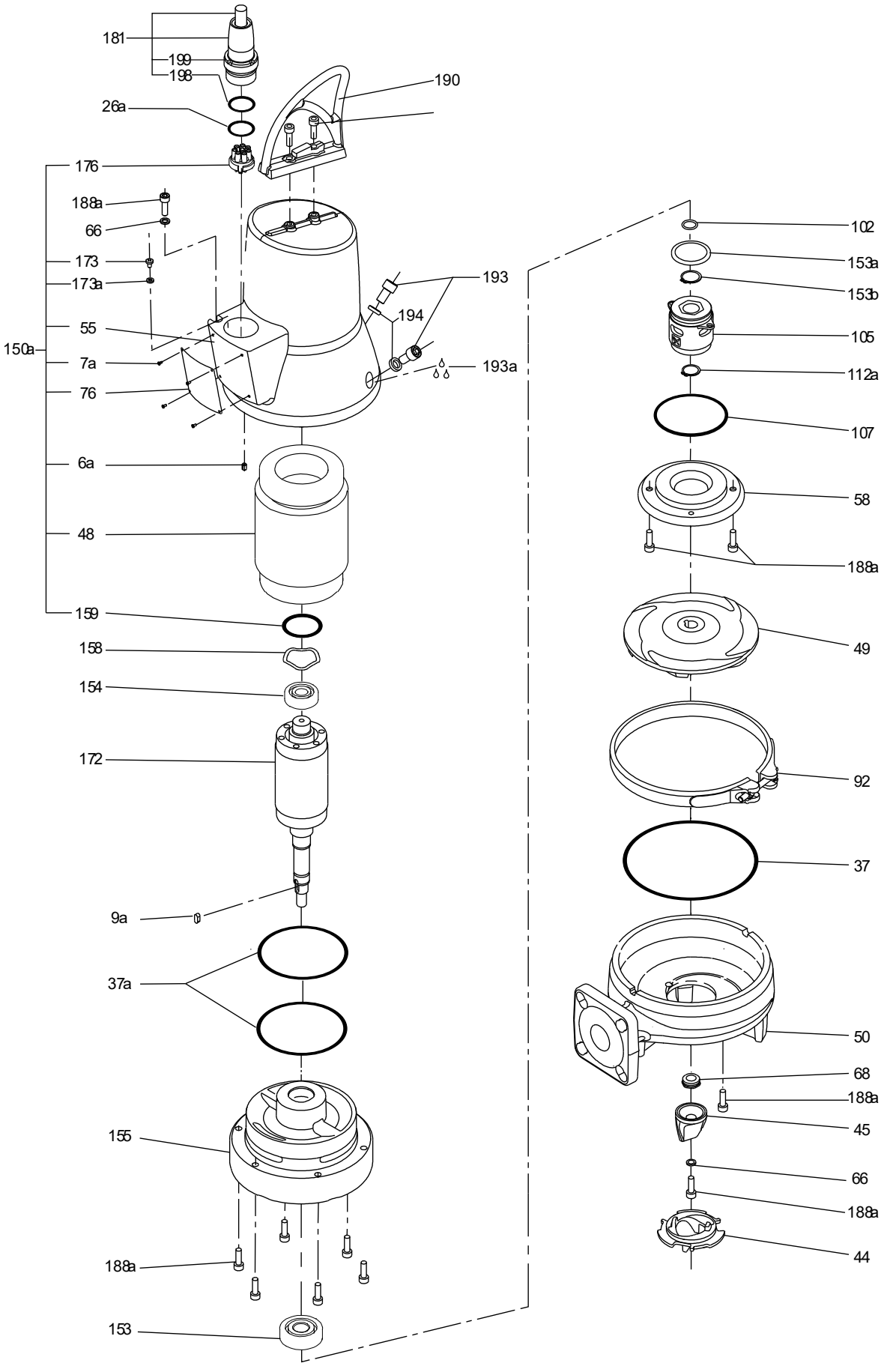

Up to 1.5 kW / 2.0 hp

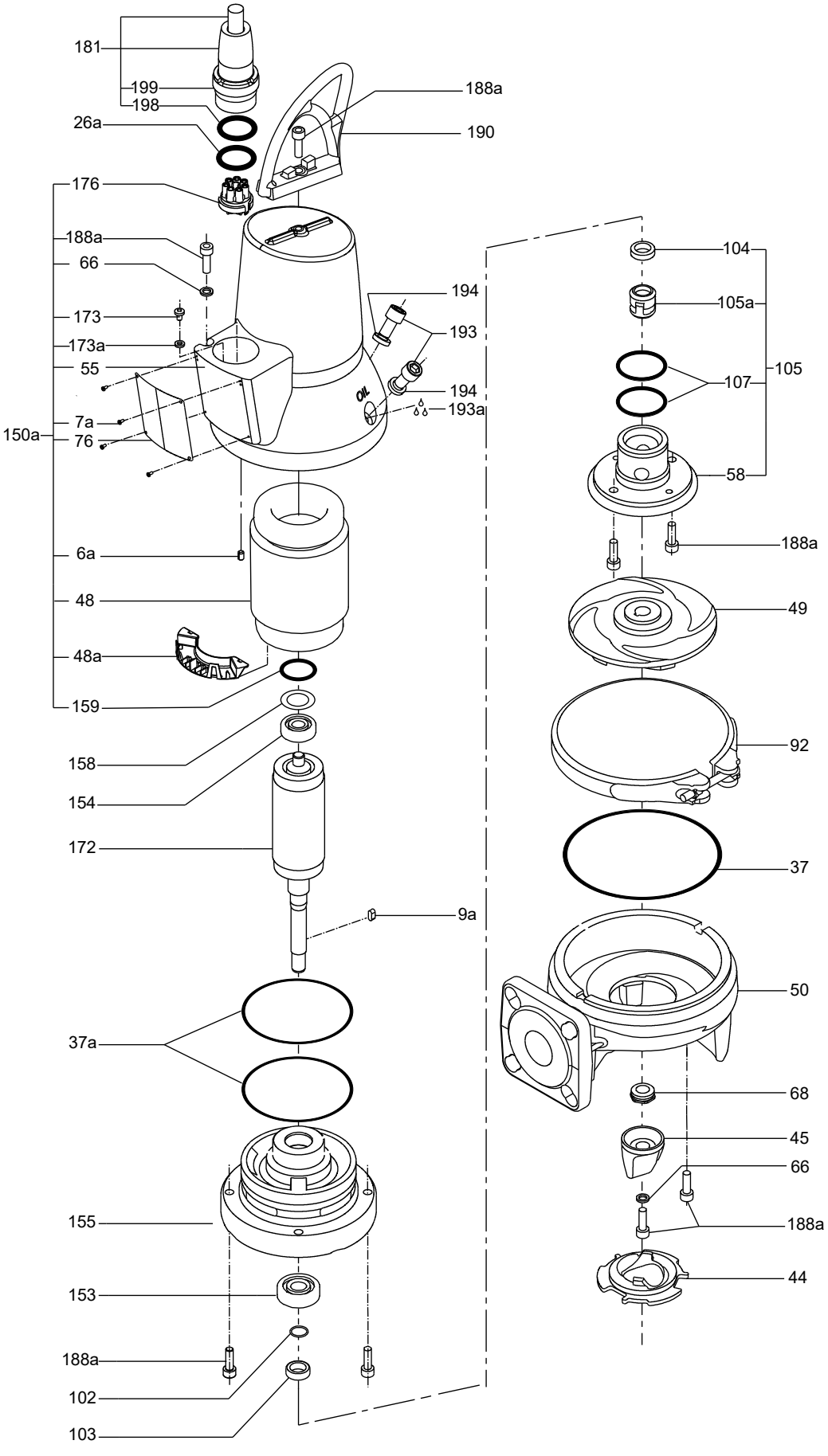

Bearings

Pos.	Description	50 Hz		60 Hz		60 Hz US	
		0.9 - 1.5 kW	2.6 - 4.0 kW	0.9 - 1.5 kW	2.6 - 4.0 kW	2.0 hp	3.0 - 5.5 hp
	Kit No	*98682341*	*96690710*	*96690709*	*96690710*	*96690709*	*96690710*
153	Bearing (lower)	1	1	1	1	1	1
153b	Retaining ring	-	1	-	1	-	-
154	Bearing (upper)	1	1	1	1	1	1

Pump housing - 60 Hz

Pos.	Description	SEG.40		SEG.50	SEG.K40		SEG.K50	SEG.A15		SEG.A20
		0.9 - 1.5 kW	2.6 - 4.0 kW	2.6 - 4.0 kW	0.9 - 1.5 kW	2.6 - 4.0 kW	2.6 - 4.0 kW	2.0 hp	3.0 - 5.5 hp	3.0 - 5.5 hp
	Kit No	*98453277*	*98453280*	*98453300*	*98453296*	*98453299*	*98453291*	*98453278*	*98453298*	*98453291*
50	Pump housing	1	1	1	1	1	1	1	1	1

Pump housing - 50 Hz

Pos.	Description	SEG.50
		2.6 - 4.0 kW
	Kit No	*99346023*
50	Pump housing	1

Clamp

Pos.	Description	0.9 - 1.5 kW	2.6 - 4.0 kW
		2.0 hp	3.0 - 5.5 hp
	Kit No	*96592050*	*96592054*
92	Clamp complete	1	1

Guide claw - 50 Hz

Pos.	Description	DN 40	
	Rubber type	NBR	FKM
	Kit No	*96592055*	*96659162*
-	Rubber seal for guide shoe	1	1
-	Guide shoe	1	1

SmartSeal - 50 Hz

Pos.	Description	DN 40	
		NBR	FKM
	Kit No	*96592036*	*96659159*
-	SmartSeal for guide claw	1	1

Upper guide rail holder - 50 Hz

Pos.	Description	DN 40
	Kit No	*96829356*
-	Upper guide rail holder 3/4"	1
-	Rubber tube (20-9-35)	2
-	Rubber tube (26-9-35)	2
-	Screw	2
-	Washer	2
-	Nut	2

Stator with housing - 60 Hz

SEG.(K)40 / SEG.A15			0.9 - 1.5 kW / 2.0 hp				2.6 kW / 3.0 hp			3.1 - 4.0 kW / 4.0 - 5.5 hp		
Pos.	Description	DIN	208-230 V	380 V	460 V	200-230 V	380 V	460 V	200-230 V	380 V	460 V	200-230 V
			98451891	*98451893*	*98451884*	*98451878*	*98451898*	*98451885*	*98451879*	*98451904*	*98451887*	*98451880*
		US	208-230 V	460 V	575 V	200-230 V	460 V	575 V	200-230 V	460 V	575 V	200-230 V
			98451882	*98451884*	*98451881*	*98451878*	*98451885*	*98451886*	*98451879*	*98451887*	*98451888*	*98451880*
6a	Spring pin		1	1	1	1	1	1	1	1	1	1
48	Stator		1	1	1	1	1	1	1	1	1	1
48a	Cover for stator connection		1	1	1	1	-	-	-	-	-	-
55	Stator housing		1	1	1	1	1	1	1	1	1	1
159	O-ring NBR	37.0 x 2.0	1	1	1	1	-	-	-	-	-	-
		52.0 × 3.0	-	-	-	-	1	1	1	1	1	1
173	Screw		1	1	1	1	1	1	1	1	1	1
173a	Lock washer		1	1	1	1	1	1	1	1	1	1
176	Cable plug		1	1	1	1	1	1	1	1	1	1
1031	Connector pin		-	-	-	-	6	6	6	6	6	6
-	Short circuit bridge		-	1	1	-	-	-	-	-	-	-
-	Cover against sharp edges		-	-	-	-	1	1	1	1	1	1

SEG.(K)50 / SEG.20			2.6 kW / 3.0 hp			3.1 - 4.0 kW / 4.0 -5.5 hp		
Pos.	Description	DIN	380 V	460 V	200-230 V	380 V	460 V	200-230 V
			98451898	*98451885*	*98451879*	*98451904*	*98451887*	*98451880*
		US	460 V	575 V	200-230 V	460 V	575 V	200-230 V
			98451885	*98451886*	*98451879*	*98451887*	*98451888*	*98451880*
6a	Spring pin		1	1	1	1	1	1
48	Stator		1	1	1	1	1	1
55	Stator housing		1	1	1	1	1	1
159	O-ring NBR	52.0 × 3.0	1	1	1	1	1	1
173	Screw		1	1	1	1	1	1
173a	Lock washer		1	1	1	1	1	1
176	Cable plug		1	1	1	1	1	1
1031	Connector pin		6	6	6	6	6	6
-	Cover against sharp edges		1	1	1	1	1	1

2.6 to 4.0 kW / 3.0 to 5.5 hp

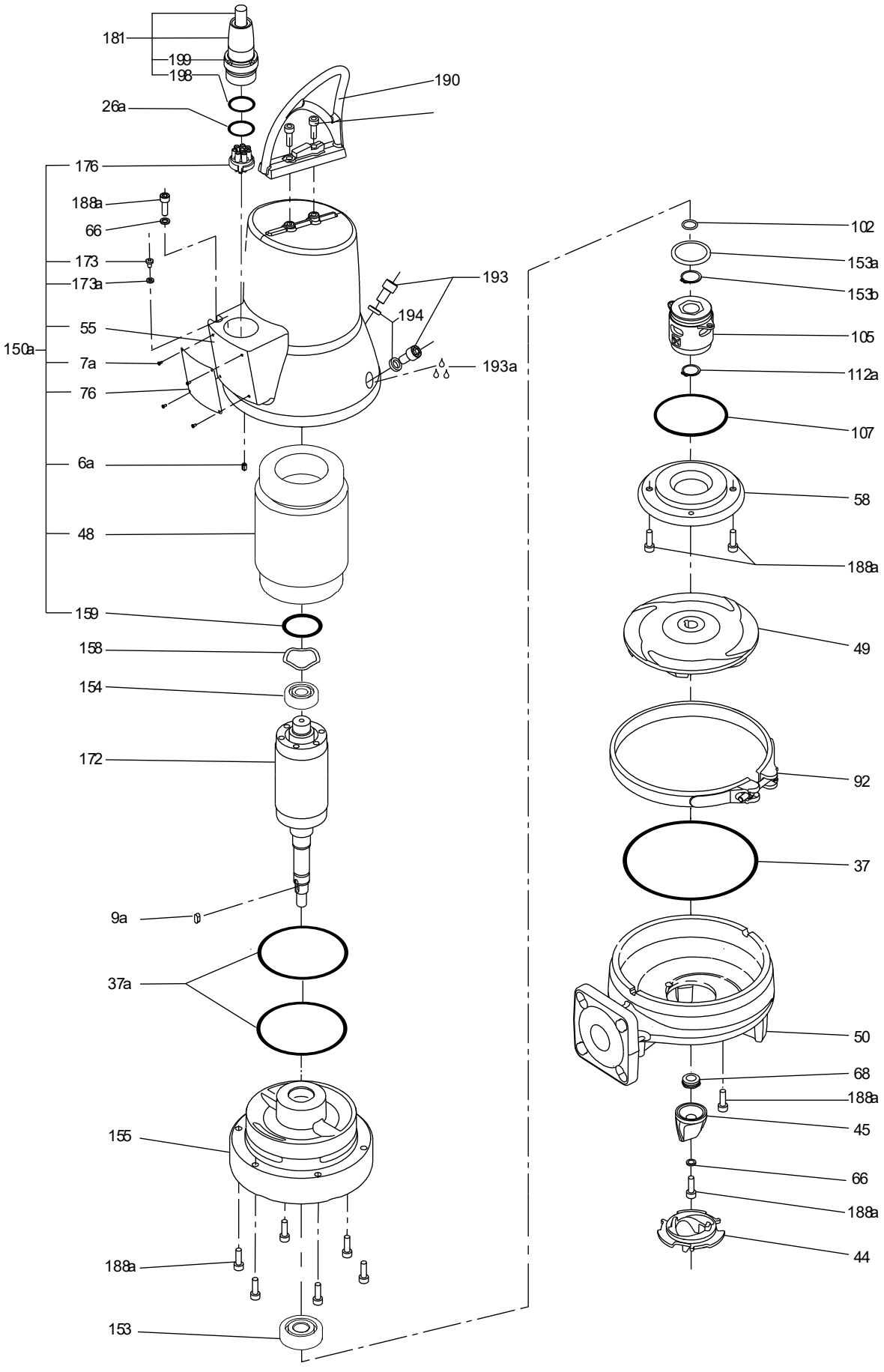

Up to 1.5 kW / 2.0 hp

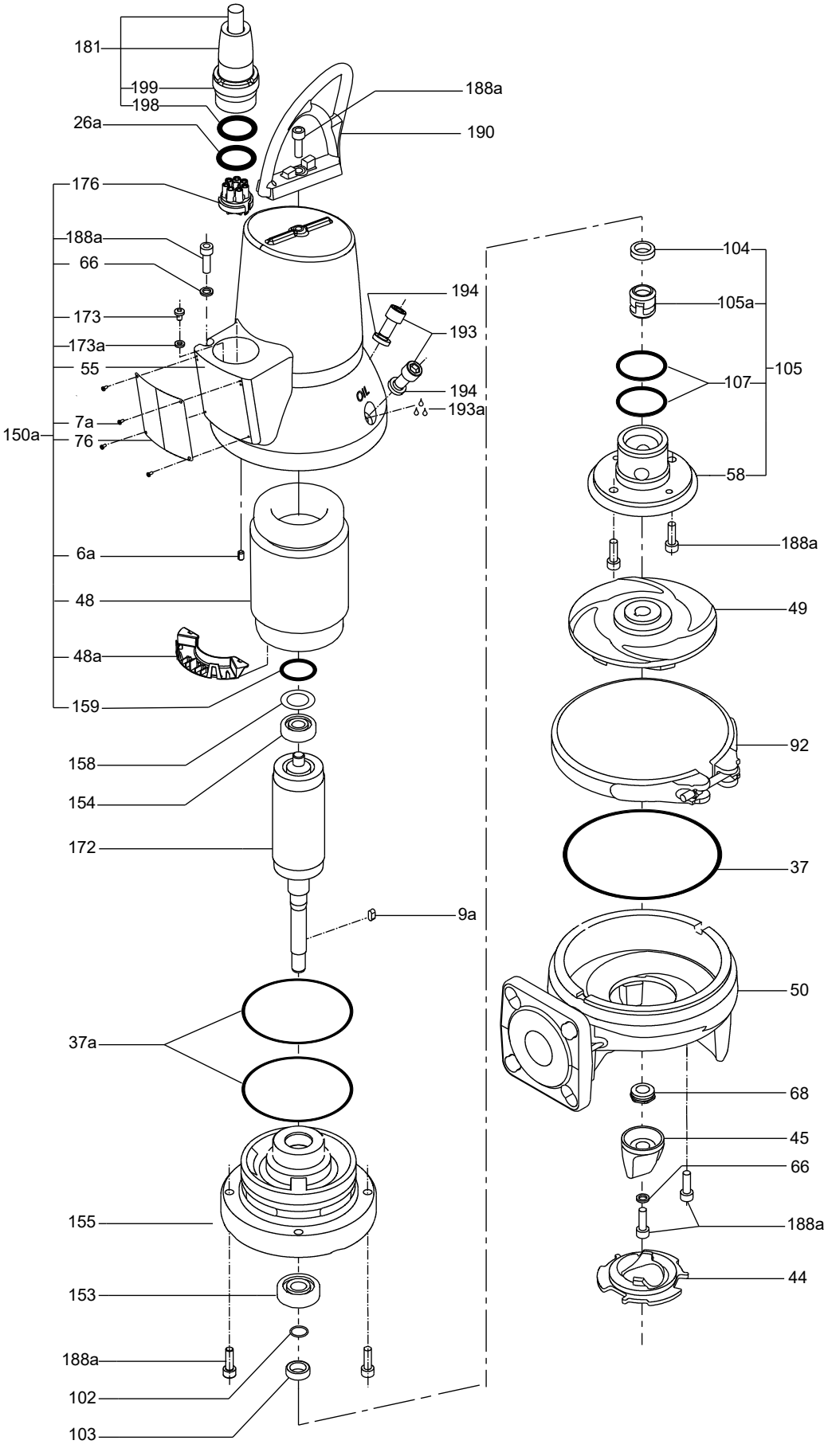

76. SEG Autoadapt

50 Hz

Lid for electronic unit

Pos.	Description	Type	Standard 1-ph.	Ex 1-ph.	Standard 3-ph.	Ex 3-ph.
			0.9 - 1.5 kW	0.9 - 1.5 kW	0.9 - 4.0 kW	0.9 - 4.0 kW
		Kit No	*96898085*	*96984145*	*96898086*	*96984146*
16	O-ring	34.2 x 3.0	1	1	1	1
26a	O-ring	32.0 x 4.0	1	1	1	1
90a	Lid with electronic unit		1	1	1	1
90b	O-ring	180.0 x 4.0	1	1	1	1
287b	O-ring	20.2 x 3.0	1	1	1	1
287c	Set screw		1	1	1	1
-	Splice connector		4	4	3	3
-	Cable clip		1	1	1	1
-	Protection sleeve		1	1	1	1
-	Absorbent bag		2	2	2	2

Impeller

Pos.	Description/Kit No	SEG.40						SEG.50		
		0.9 kW	1.2 kW	1.5 kW	2.6 kW	3.0 kW	4.0 kW	2.6 kW	3.0 kW	4.0 kW
		96076115	*96076116*	*96076117*	*96076118*	*96076119*	*96076120*	99346032	99346046	99346048
9a	Key	1	1	1	1	1	1	1	1	1
49	Impeller	1	1	1	1	1	1	1	1	1
66	Lock washer	1	1	1	1	1	1	1	1	1
68	Adjustment nut	1	1	1	1	1	1	1	1	1
188a	Screw	1	1	1	1	1	1	1	1	1

O-ring

Pos.	Description	Type	0.9 - 1.5 kW		2.6 - 4.0 kW	
		Rubber type	NBR	FKM	NBR	FKM
		Kit No	*96076124*	*96646061*	*96076125*	*96646062*
198	O-ring	34.2 x 3.0	1	1	1	1
26a	O-ring	32.0 x 4.0	1	-	1	1
37	O-ring	164.5 x 3.0	1	1	-	-
		204.0 x 3.0	-	-	1	1
37a	O-ring	114.0 x 3.0	2	2	-	-
		114.3 x 5.7	-	-	2	2
90b	O-ring	180.0 x 4.0	-	1	-	1
102	O-ring	16.0 x 1.5	1	1	-	-
		17.3 x 2.4	-	-	1	1
107	O-ring	47.0 x 3.0	1	1	-	-
		90.0 x 4.0	-	-	1	1
108	O-ring	50.0 x 3.0	1	1	1	1
153a	O-ring					-
153b	O-ring	28.0 x 2.0	1	1	1	1
159	O-ring	32.0 x 2.0	1	1	-	-
		37.0 x 2.0	1	1	-	-
		52.0 x 3.0	-	-	1	1
185	O-ring	31.0 x 2.0	1	-	1	-
194	Seal washer		2	2	2	2
Tool	Bush tomount shaft seal		1	1	-	-

Sphere for hook-up

Pos.	Description	Type	DN 40/Rp 1 1/2		DN 50/Rp 2	
		Rubber type	NBR	FKM	NBR	FKM
		Kit No	*96592033*	*96657776*	*96592034*	*96657778*
-	Sphere for hook-up		1	1	1	1

Upper guide rail holder (UGRH)

Pos.	Description/Kit No	*96829356*
-	Upper guide rail holder 3/4"	1

2.6 - 4.0 kW

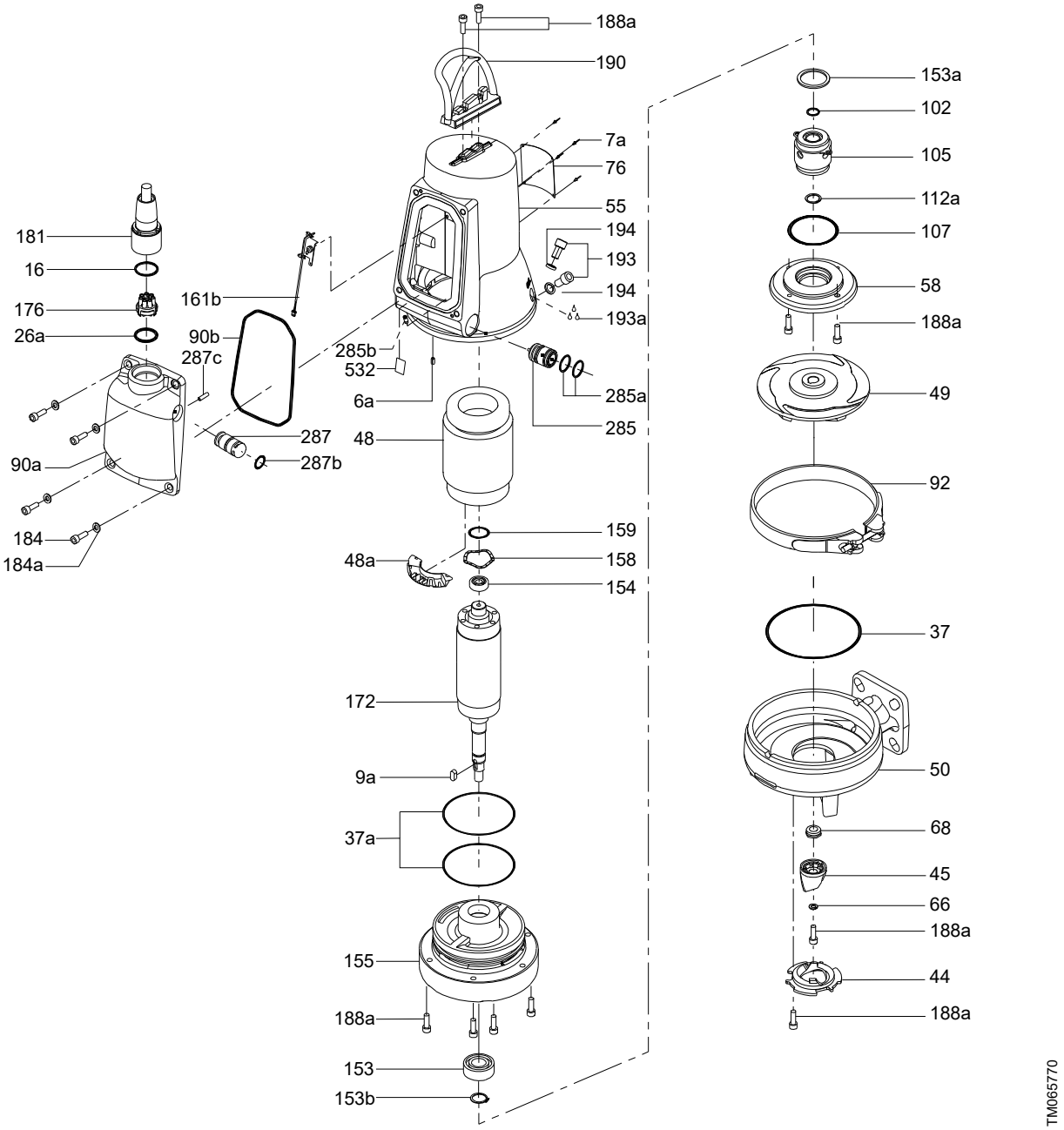

TM065770

0.9 - 1.5 kW

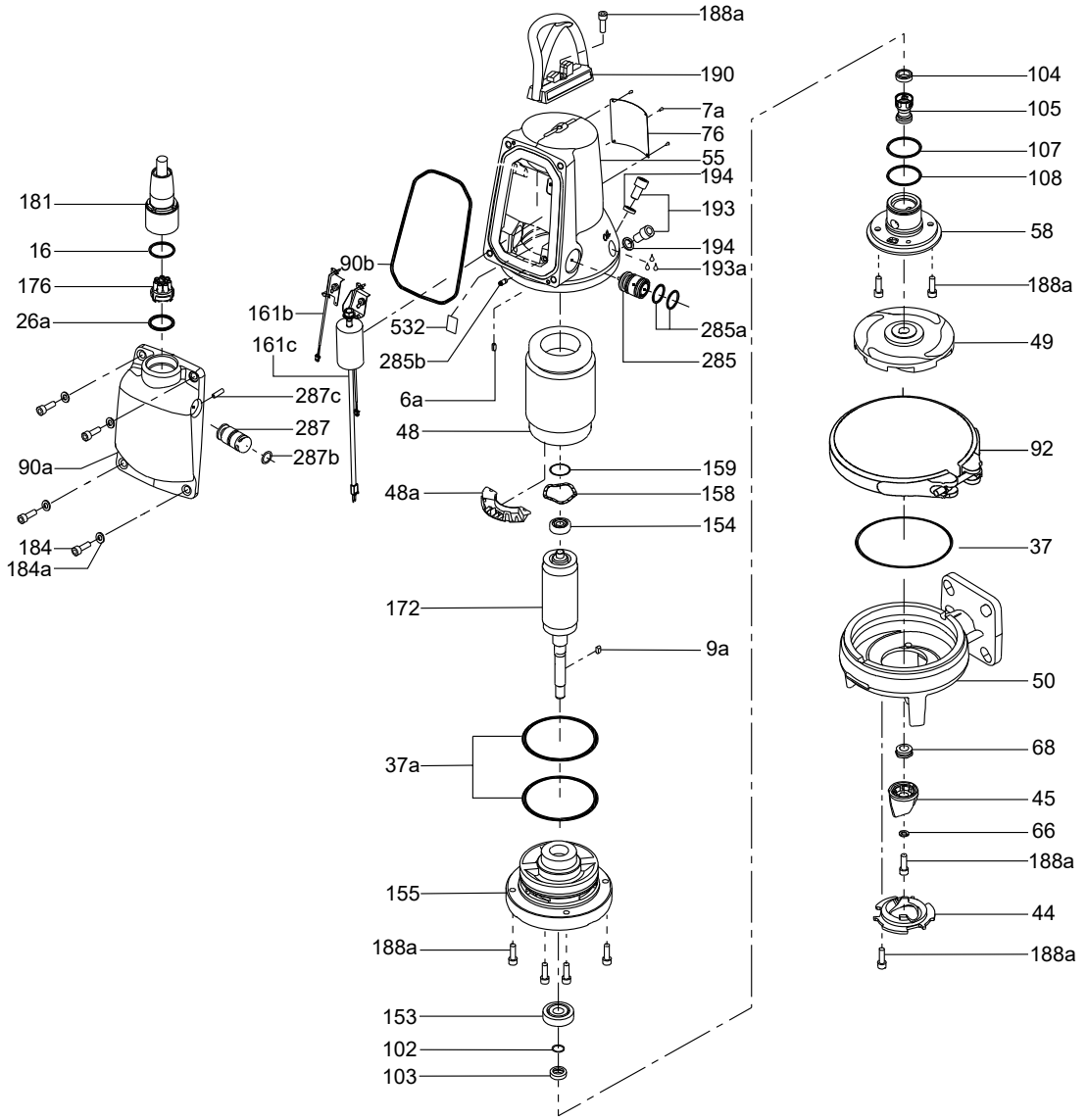

TM065750

Shaft seal

Pos.	Description	Type	0.9 - 1.5 kW		2.6 - 4.0 kW	
		Rubber type	BQQP	BQQV	BQQP	BQQV
		Kit No	*96076122*	*96645160*	*96076123*	*96645275*
9a	Key		1	1	1	1
37	O-ring	164.5 x 3.0	1	1	-	-
		204.0 x 3.0	-	-	1	1
58	Shaft seal retainer		1	1	-	-
66	Lock washer		1	1	1	1
102	O-ring	16.0 x 1.5	1	1	-	-
		17.3 x 2.4	-	-	1	1
103	Bush for seal ring		1	1	-	-
104	Seal ring		1	1	-	-
105b	Shaft seal		1	1	1	1
107	O-ring	47.0 x 3.0	1	1	-	-
		90.0 x 4.0	-	-	1	1
108	O-ring	50.0 x 3.0	-	1	-	-
112a	Retaining ring		-	-	1	1
188a	Screw		1	1	1	1
194	Seal washer		2	2	2	1
198	Bush for shaft seal		1	1	-	-

Clamp

Pos.	Description	Type	0.9 - 1.5 kW	2.6 - 4.0 kW
		Kit No	*96592050*	*96592054*
92	Clamp complete		1	1

Dry-running sensor

Pos.	Description	Type	Standard	Ex
		Kit No	*96898083*	*96984131*
90b	O-ring	180.0 x 4.0	1	1
285	Dry-running sensor		2	2
285a	O-ring	29.7 x 2.95	2	2
287c	Set screw		1	1

Grinder

Pos.	Type	SEG.40		SEG.50
		Standard	Heavy duty	High-flow
	Description/Kit No	*96076121*	*96903344*	*98453210*
44	Grinder ring	1	1	1
45	Grinder head	1	1	1
66	Lock washer	1	1	1
188a	Screw	1	1	1

Guide claw

Pos.	Description	Type	DN 40	
		Rubber type	NBR	FKM
		Kit No	*96592055*	*96659162*
-	Rubber seal		1	1
-	Guide claw		1	1

Level sensor

Pos.	Description	Type	Standard	Ex
		Kit No	*96898082*	*96984130*
90b	O-ring	180.0 x 4.0	1	1
287	Level sensor		1	1
287a	Protection plate		1	1
287b	O-ring	20.2 x 3.0	1	1
287c	Set screw		1	1

Lifting bracket

Pos.	Description	Type	0.9 - 1.5 kW	2.6 - 4.0 kW
		Kit No	*96984147*	*96984148*
188a	Screw		1	2
190	Lifting bracket		1	1

Bearing

Pos.	Description	Type	0.9 - 1.5 kW	2.6 - 4.0 kW
		Kit No	*98682341*	*96690710*
153	Bearing (lower)		1	1
154	Bearing (upper)		1	1

Connector plug (inner)

Pos.	Description/Kit No		*96984144*
16	O-ring	34.2 x 3.0	1
26a	O-ring	32.0 x 4.0	1
90b	O-ring	180.0 x 4.0	1
176	Connector (inner plug part)		1

Run capacitor

Pos.	Description	Type	Standard 1-phase and Ex
			0.9 - 1.2 kW
		Kit No	*96898084*
90b	O-ring	180.0 x 4.0	1
161c	Run capacitor and Pt1000 sensor with bracket		1

SmartSeal (for guide claw)

Pos.	Description	Type	DN 40	
		Rubber type	NBR	FKM
		Kit No	*96592036*	*96659159*
-	SmartSeal		1	1

Shaft seal carrier

Pos.	Description/Kit No	SEG.50
		99346051
58	Shaft seal carrier	1

Shaft with rotor

Pos.	Description	Type	SEG.50	
			2.6 kW	3.1 - 4.0 kW
		Kit No	*99346054*	99346058
-	Shaft with rotor		1	1

2.6 - 4.0 kW

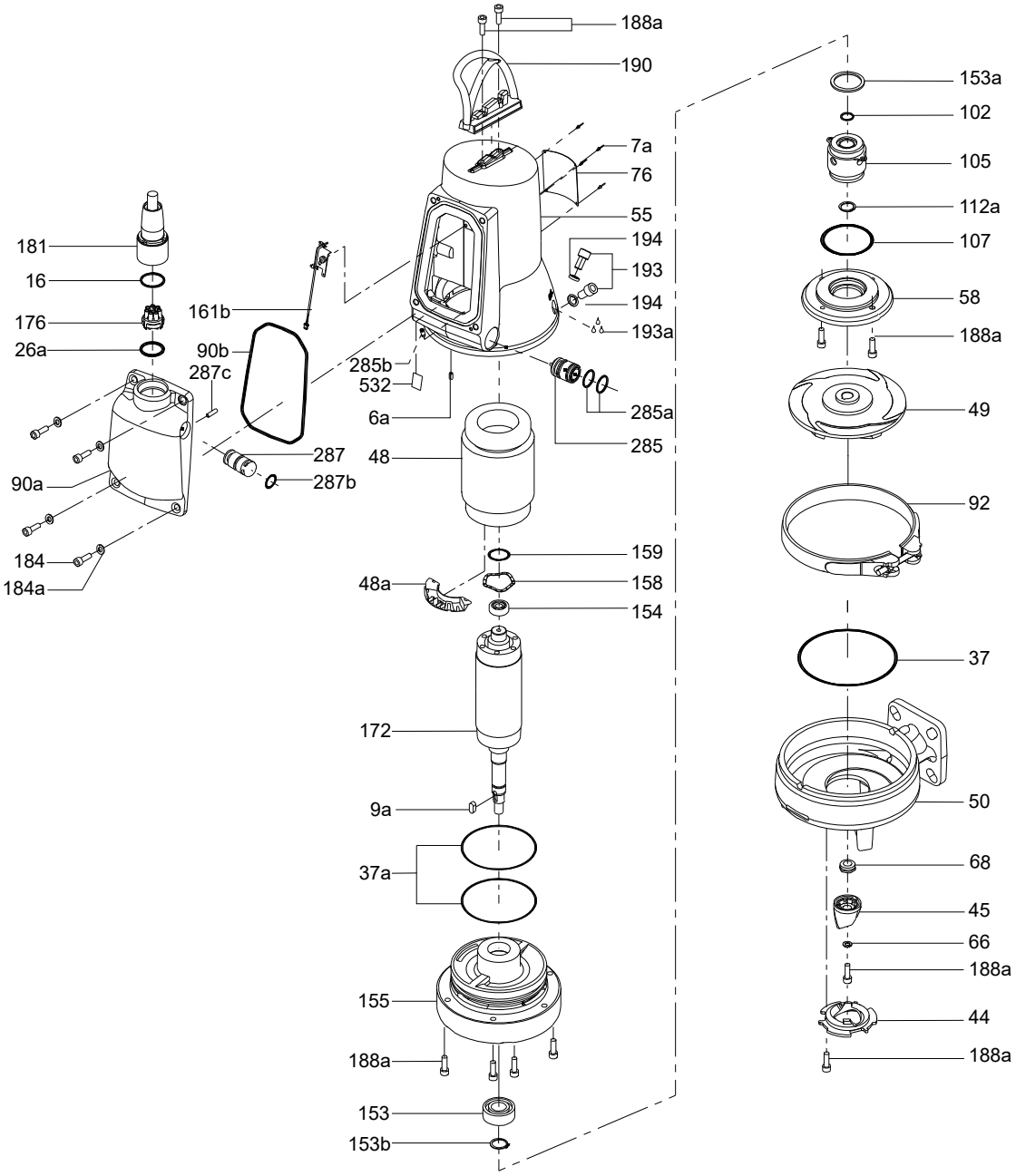
188a
190
7a
76
55
194
193
194
193a
181
16
176
26a
161b
90b
287c
285b
532
6a
285a
285
287
287b
48
90a
184
184a
159
158
154
48a
172
9a
37a
155
188a
153
153b
153a
102
105
112a
107
58
188a
49
92
37
50
68
45
66
188a
44
188a
TM065770

0.9 - 1.5 kW

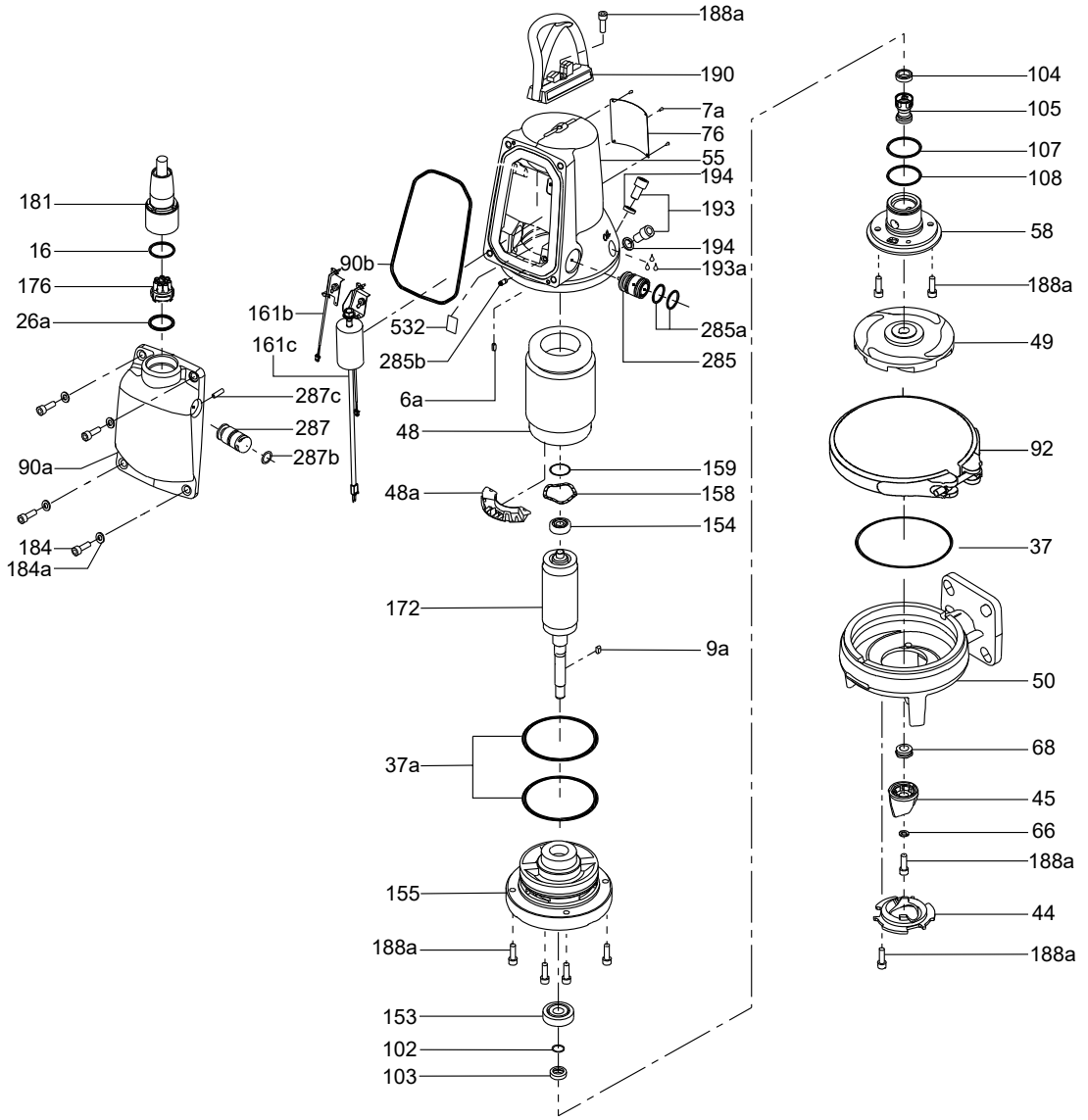
188a
190
7a
76
55
194
193
194
193a
285a
285
181
16
176
26a
90b
161b
161c
532
285b
6a
48
287c
287
287b
90a
184
184a
48a
159
158
154
172
9a
37a
155
188a
153
102
103
104
105
107
108
58
188a
49
92
37
50
68
45
66
188a
44
188a
TM065750

77. SEN

Ranges 34 and 42

50 Hz

Bearing, range 34

Pos.	Range	S34, S34X
	Kit No	*96494644*
203	Ball bearing	1
206	Retaining ring	1
207	Ball bearing	1
208	Washer	2
209	Retaining ring	1

Bearing, range 42

Pos.	Range	S42, S42X
	Kit No	*96494646*
203	Ball bearing	1
206	Retaining ring	1
207	Ball bearing	1
208	Washer	1
209	Retaining ring	1

Cable

Pos.	Description/length	10 m	15 m	25 m	50 m [1]
234	7 x 1.5 mm^2	*96307955*	*96307956*	*96307957*	*96307958*
	9 x 1.5 mm^2	*96307963*	*96307964*	*96307965*	*96307966*
	3 x 2.5 mm^2, control cable	*96308007*	*96308008*	*96308009*	*96308010*

1) Without terminated ends

Cable entry

Pos.	Range	S34, S42	S34, S42	S42	S34, S42
	Description		Standard		Ex
		4 x 1.5 mm^2	7 x 1.5 mm^2	9 x 1.5 mm^2	7 x 1.5 mm^2
					Stainless steel
	Kit No	*96494649*	*96494650*	*96588633*	*95113751*
235	Rubber seal	1	1	1	1
236	Cable entry	1	1	1	1
237	Screw	2	3	3	3
238	Cable clamp	1	1	1	1

Cable entry gasket

Pos.	Range	S34, S42 S34X, S42X	S42
	Description	7 x 1.5 mm^2	9 x 1.5 mm^2
	Kit No	*96253077*	*96294869*
235	Rubber seal	1	1

Shaft seal

Pos.	Range	S34, S34X	S42, S42X
	Kit No	*96567334*	*96567334*
260	Shaft seal	1	1

SENV

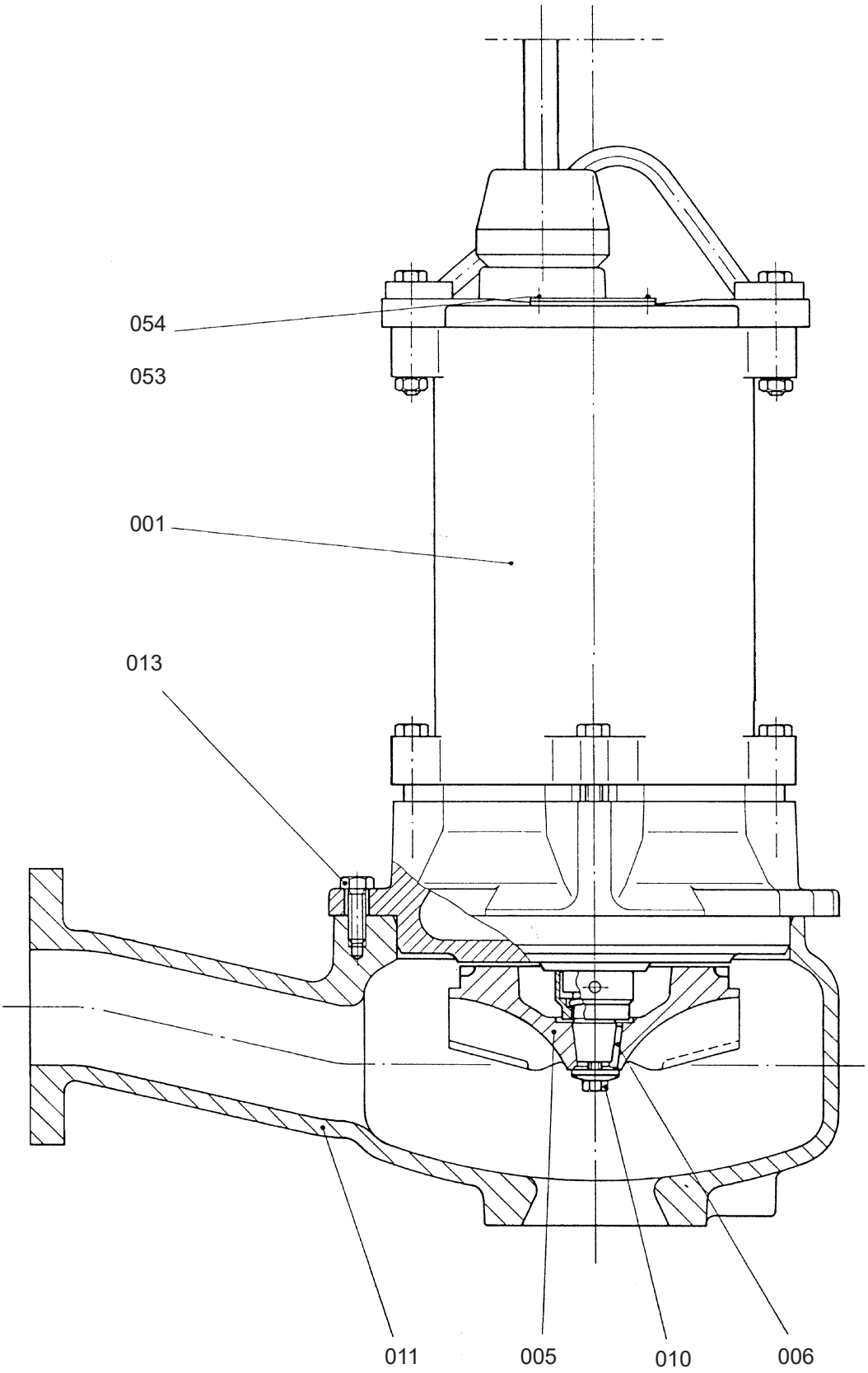

TM024511

Pump materials Q and S

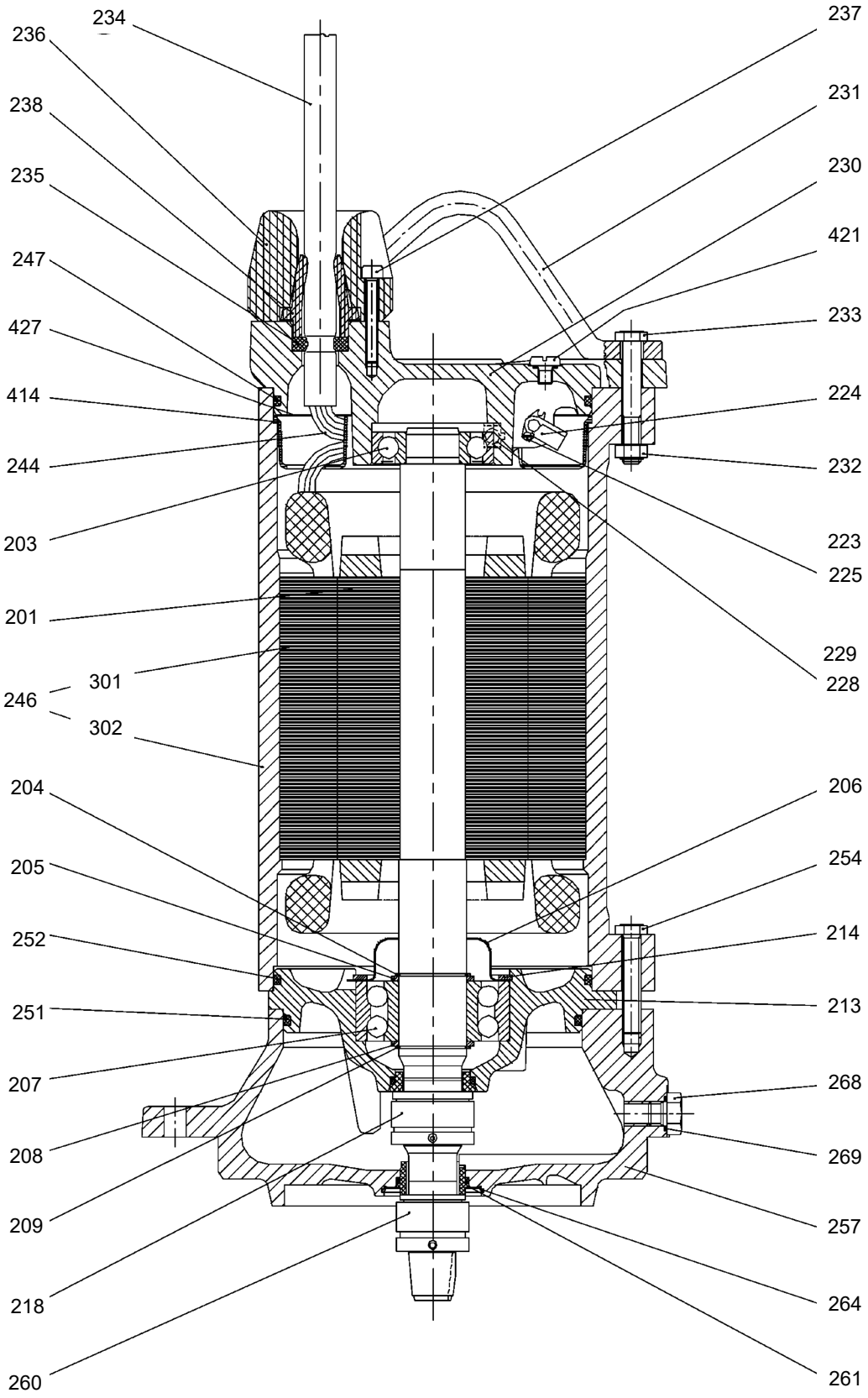

Moisture switch

Pos.	Description/kit No	*96256056*
224	Moisture switch	1
-	Adjusting gauge	1
-	Connector	6

Note: Two moisture switches are used for explosion-proof pumps.

O-ring

Pos.	Range		S34, 34X	S42, 42X
	Description/kit No		*96255888*	*96255889*
85	O-ring	16.3 x 2.4	1	1
101	O-ring	219.3 x 5.7	1	-
		269.3 x 5.7	-	1
219	O-ring	59.2 x 5.7	1	1
247	O-ring	114.5 x 3	1	-
		129.3 x 5.7	1	-
		159.3 x 5.7	-	1
		149.3 x 5.7	1	1
251	O-ring	159.3 x 5.7	1	-
		259.3 x 5.7	-	1
252	O-ring	169.3 x 5.7	-	1
269	O-ring	16.3 x 2.4	-	2
		10.3 x 2.4	3	2
450	O-ring	16.3 x 2.4	1	1
		10.3 x 2.4	-	1
-	O-ring	8.3 x 2.4	-	2

O-rings for oil/inspection plugs

Pos.	Description	M8	M10	3/4"
	Kit No	*96060537*	*96060538*	*96467951*
269	O-ring	12	12	-
450	O-ring	-	-	12

SEN1

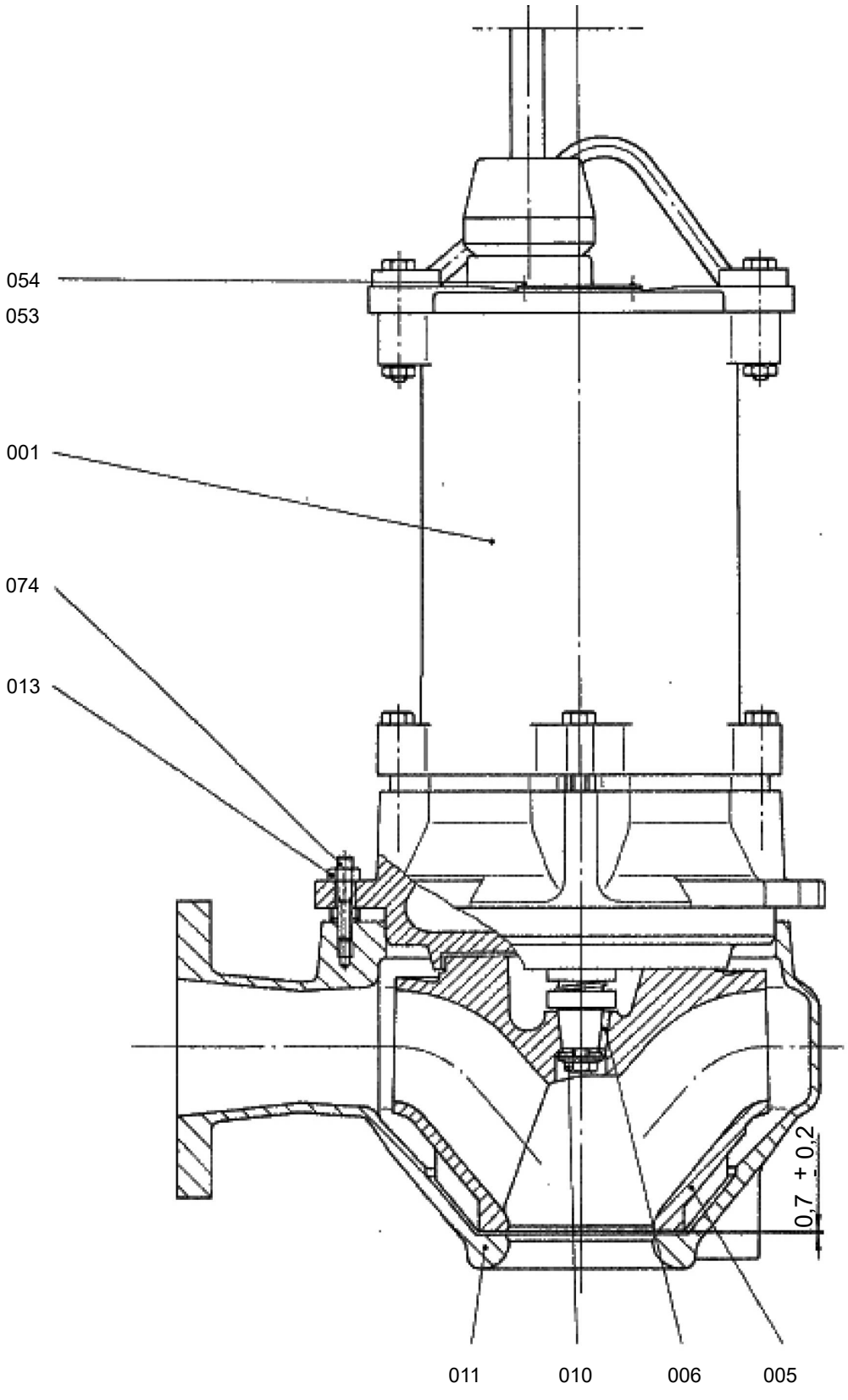

Pump material R

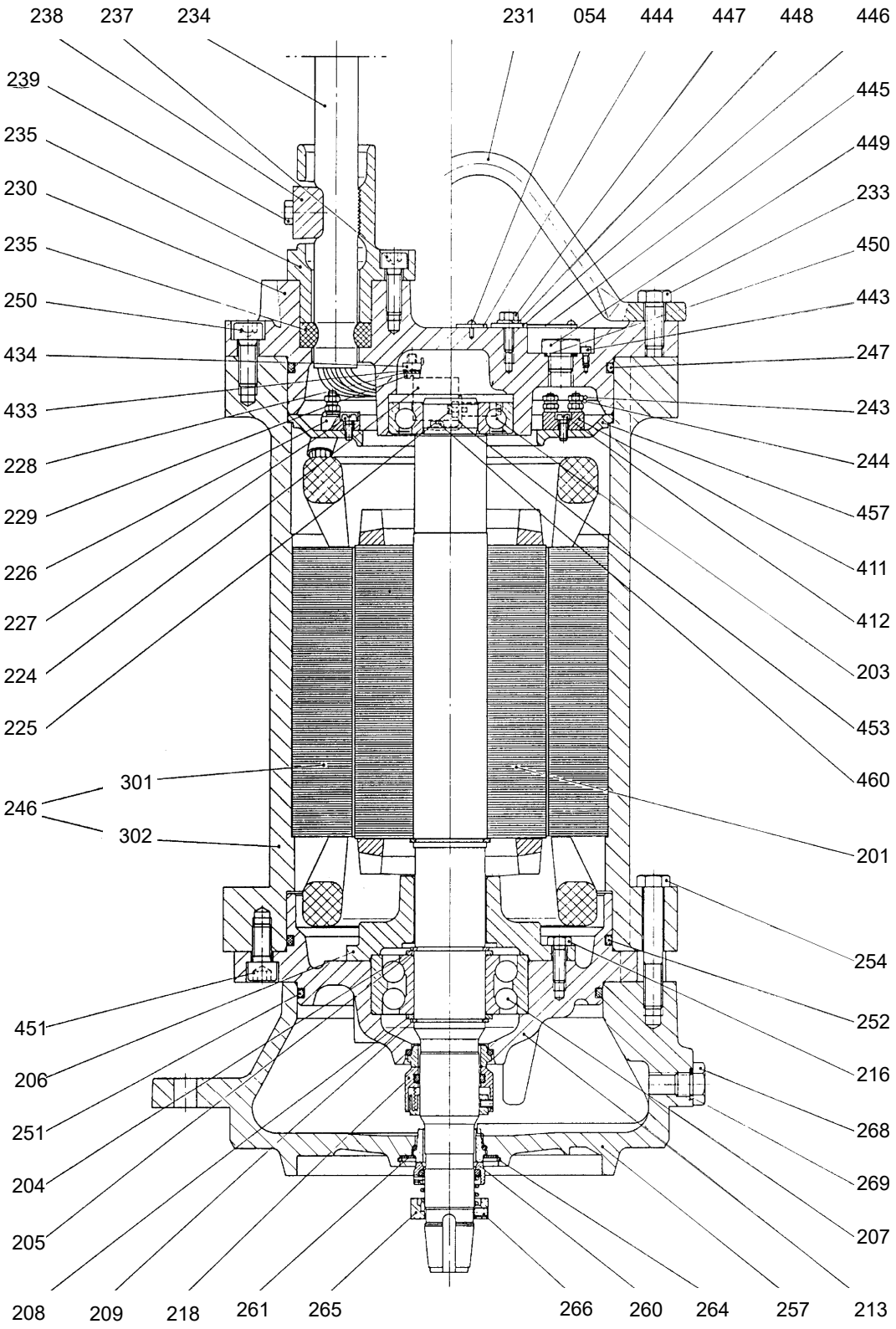

Ranges 50 and 54

Bearing

Pos.	Range	S50, S50X	S54, S54X
	Kit No	***96494648***	***96294836***
203	Ball bearing	1	1
204	Retaining ring	1	1
205	Washer	1	1
207	Ball bearing	1	1
208	Washer	1	1
209	Retaining ring	1	1
214	Retaining ring	-	1

Cable entry
Standard

Pos.	Range	S50, S54		S50		S54
	Description	**9 x 2.5 mm^2**	**7 x 6 mm^2 + 2 x 2.5 mm^2**	**9 x 1.5 mm^2**	**9 x 2.5 mm^2**	**7 x 6 mm^2 + 2 x 2.5 mm^2**
					Stainless steel	**Stainless steel**
	Kit No	***95113753***	***96294858***	***95113752***	***96113755***	***95113758***
236	Cable entry	1	1	1	1	1
237	Screw	3	3	3	3	3
238	Cable clamp	1	1	1	1	1

Explosion-proof

Pos.	Range	S50		S50, S54	S54
	Description	**9 x 1.5 mm^2 9 x 2.5 mm^2**		**7 x 6 mm^2 + 2 x 2.5 $mm^2$5 x 10 mm^2**	**7 x 6 mm^2 + 2 x 2.5 mm^2**
		Stainless steel			**Stainless steel**
	Kit No	***95113754***	***95113757***	***96294843***	***95113759***
236	Cable entry	1	1	2	1
237	Screw	3	3	6	3
238	Cable clamp	1	1	2	1

Cable entry gasket, range 50

Standard		**7 x 6 mm^2 + 2 x 2.5 mm^2**	**9 x 1.5 mm^2**	**9 x 2.5 mm^2**	**Explosion-proof**		**7 x 6 mm^2 + 2 x 2.5 mm^2**	**9 x 1.5 $mm^2$9 x 2.5 mm^2**
Pos.	**Description/kit No**	***96294867***	***96294868***	***96294870***	**Pos.**	**Description/kit No**	***96294859***	***96294869***
235	Rubber seal	2	1	1	235	Rubber seal	2	1

Cable entry gasket, range 54

Standard		**7 x 6 mm^2 + 2 x 2.5 mm^2**	**Explosion-proof**		**5 x 10 mm^2 7 x 6 mm^2 + 2 x 2.5 mm^2**
Pos.	**Description/kit No**	***96294867***	**Pos.**	**Description/kit No**	***96294859***
235	Rubber seal	2	235	Rubber seal	2

Shaft seal

Pos.	Range	S50, S50X	S54, S54X
	Description	**Kit No**	**Kit No**
218	Secondary shaft seal	*96567338*	*96567341*
260	Primary shaft seal	*96567348*	*96567350*

SENV

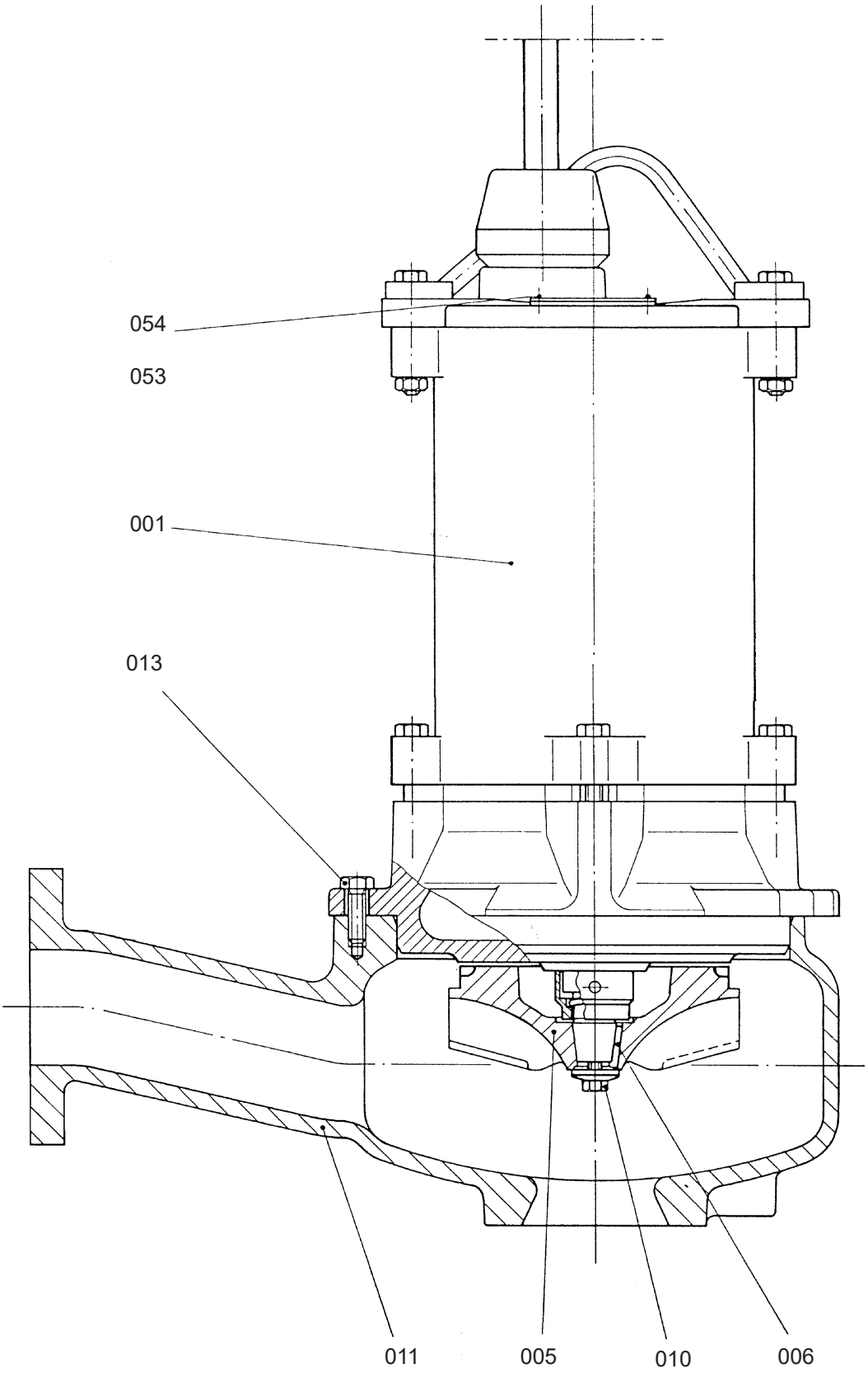

TM024511

Pump materials Q and S

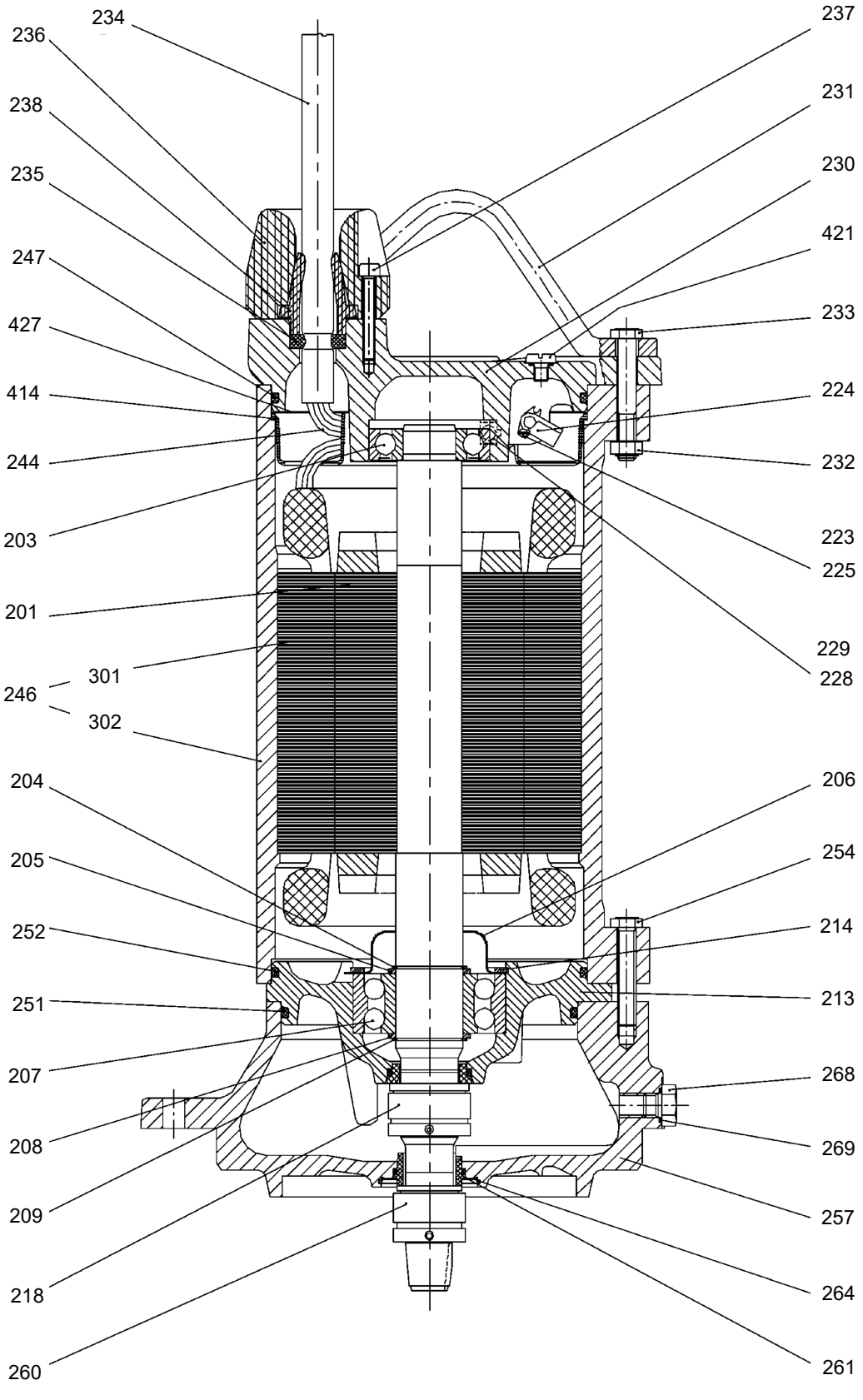

Cable

Pos.	Description / length	10 m	15 m	25 m	50 m [1]
234	7 x 1.5 mm^2	*96307955*	*96307956*	*96307957*	*96307958*
	7 x 2.5 mm^2	*96307959*	*96307960*	*96307961*	*96307962*
	9 x 1.5 mm^2	*96307963*	*96307964*	*96307965*	*96307966*
	9 x 2.5 mm^2	*96307967*	*96307968*	*96307969*	*96307970*
	7 x 6 + 2 x 2.5 mm^2	*96307971*	*96307972*	*96307973*	*96307974*
	5 x 10 mm^2	*96307975*	*96307976*	*96307977*	*96307978*
	5 x 16 mm^2	*96307979*	*96307980*	*96307981*	*96307982*
	4 x 16 mm^2	*96307983*	*96307984*	*96307985*	*96307986*
	4 x 25 mm^2	*96307987*	*96307988*	*96307989*	*96307990*
	4 x 35 mm^2	*96307991*	*96307992*	*96307993*	*96307994*
	4 x 50 mm^2	*96307995*	*96307996*	*96307997*	*96307998*
	4 x 70 mm^2	*96307999*	*96308000*	*96308001*	*96308002*
	4 x 95 mm^2	*96308003*	*96308004*	*96308005*	*96308006*
	3 x 2.5 mm^2, control cable	*96308007*	*96308008*	*96308009*	*96308010*

1) Without terminated ends

O-ring

Pos.	Range		50	54
	Description/kit No		*96494641*	*96294837*
085	O-ring	16.3 x 2.4	1	1
101	O-ring	269.3 x 5.7	1	-
		319.3 x 5.7		1
247	O-ring	194.3 x 5.7	1	-
		229.3 x 5.7	-	1
		249.3 x 5.7	-	1
251	O-ring	184.3 x 5.7	1	-
		219.3 x 5.7	-	1
252	O-ring	194.3 x 5.7	1	-
		229.3 x 5.7	-	1
269	O-ring	16.3 x 2.4	3	3
401	O-ring	279.3 x 5.7	1	-
		299.3 x 5.7	-	1
403	O-ring	279.3 x 5.7	1	-
		319.3 x 5.7	-	1
450	O-ring	16.3 x 2.4	-	1
477	O-ring	149.3 x 5.7	-	1
	O-ring	10.3 x 2.4	1	1
	O-ring	10.1 x 1.6	1	-

O-rings for oil/inspection plugs

Pos.	Description	3/4"
	Kit No	*96467951*
269	O-ring	6
450	O-ring	6

Oil indicator seal

Description/kit No	*96294838*
Rubber seal	1
Washer	2
Water-in-oil sensor seal	
Description/kit No	*96294839*
Rubber seal	1
Washer	1
Moisture switch	
Description/kit No	*96256056*
Moisture switch	1
Adjusting gauge	1
Connector	6

Water-in-oil sensor

Description/kit No		*96294840*	*96295122*	*96294841*
Water-in-oil sensor	10 m	1	-	-
	25 m	-	1	-
	50 m	-	-	1
Cable entry		1	1	1
Rubber seal		1	1	1
Washer		1	1	1
Right-angle connector		1	1	1
Protective hose		1	1	1
Fixing piece		2	2	2
Band		1	1	1
Band lock		2	2	2
Shrink cable		1	1	1

Note: Two moisture switches are used for explosion-proof pumps.

SEN1

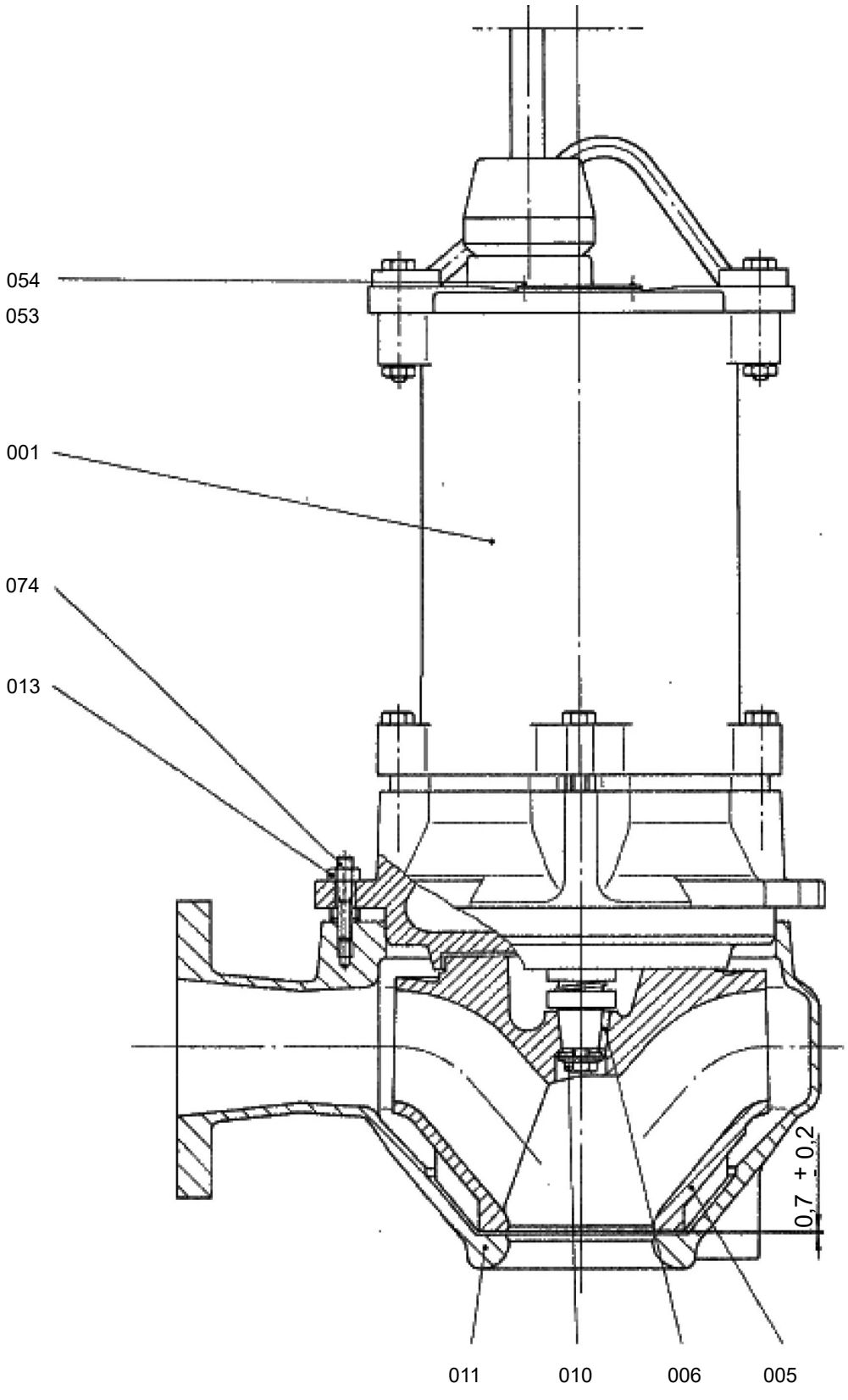

Pump material R

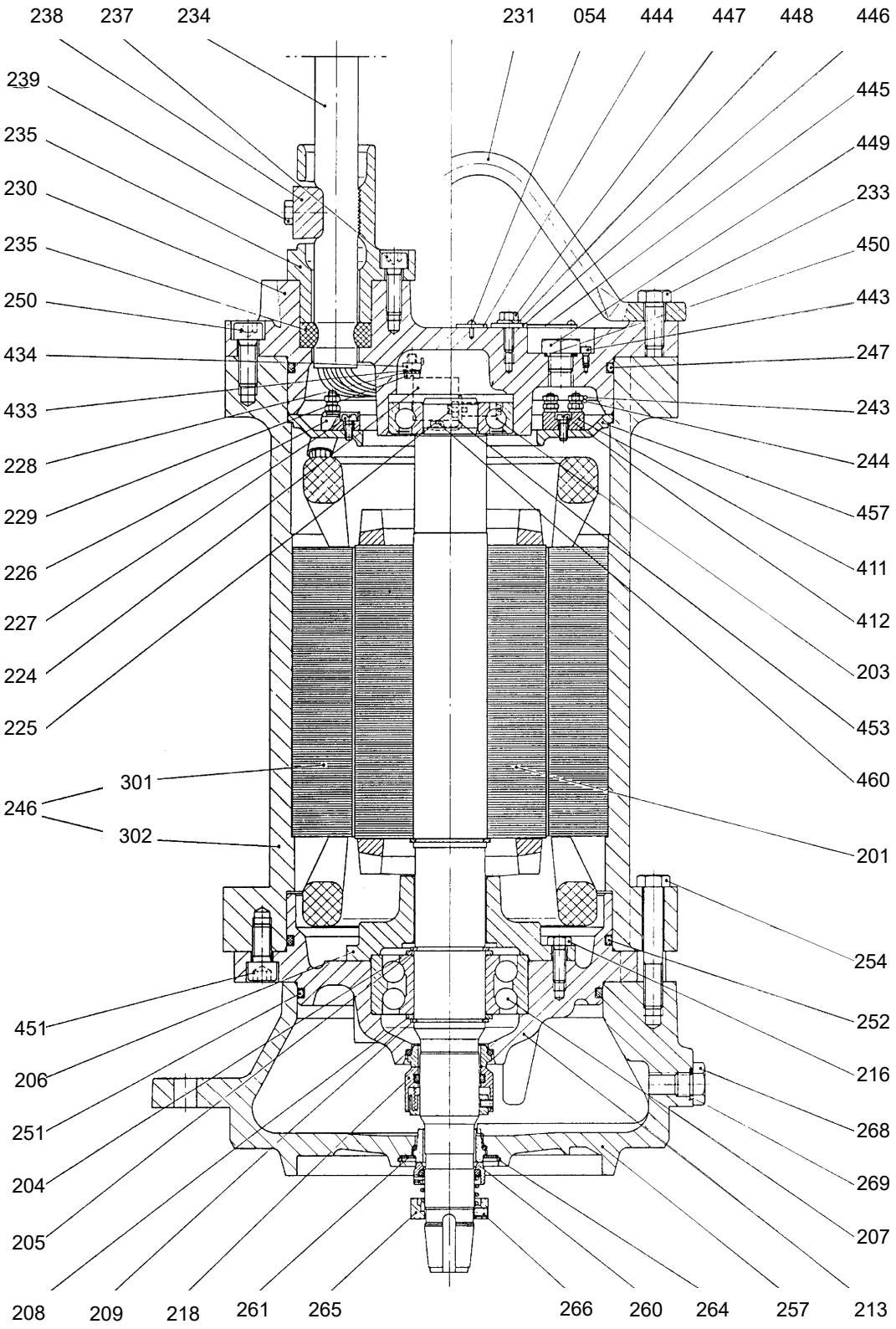

78. Sensor

Grundfos Direct Sensor

50/60 Hz

VFI service kit, sensor with flange, EPDM

Pos.	Pipe size	DN 18	DN 25	DN 32	DN 40	DN 50	DN 65	DN 80	DN 100
	Kit No	*97778585*	*97778588*	*97778589*	*97778590*	*97778611*	*97778612*	*97778613*	*97778614*
	Description								
1	Screw	4	4	4	4	4	4	4	4
2	Intermediate flange	1	1	1	1	1	1	1	1
4	Sensor housing	1	1	1	1	1	1	1	1
	O-ring	1	1	1	1	1	1	1	1
5	Body for flow pipe	1	1	1	1	1	1	1	1

VFI service kit, sensor with flange, FKM

Pos.	Pipe size	DN 18	DN 25	DN 32	DN 40	DN 50	DN 65	DN 80	DN 100
	Kit No	*97778615*	*97778616*	*97778617*	*97778618*	*97778619*	*97778620*	*97778621*	*97778626*
	Description								
1	Screw	4	4	4	4	4	4	4	4
2	Intermediate flange	1	1	1	1	1	1	1	1
4	Sensor housing	1	1	1	1	1	1	1	1
	O-ring	1	1	1	1	1	1	1	1
5	Body for flow pipe	1	1	1	1	1	1	1	1

VFI service kit, sensor with thread, EPDM

Pos.	Pipe size	DN 18	DN 25	DN 32	DN 40	DN 50	DN 65	DN 80	DN 100
	Kit No	*98333155*	*98333156*	*98333157*	*97778590*	*97778611*	*97778612*	*97778613*	*97778614*
	Description								
1	Screw	4	4	4	4	4	4	4	4
2	Intermediate flange	1	1	1	1	1	1	1	1
4	Sensor housing	1	1	1	1	1	1	1	1
	O-ring	1	1	1	1	1	1	1	1
5	Body for flow pipe	1	1	1	1	1	1	1	1

VFI service kit, sensor with thread, FKM

Pos.	Pipe size	DN 18	DN 25	DN 32	DN 40	DN 50	DN 65	DN 80	DN 100
	Kit No	*98333158*	*98333159*	*98333160*	*97778618*	*97778619*	*97778620*	*97778621*	*97778626*
	Description								
1	Screw	4	4	4	4	4	4	4	4
2	Intermediate flange	1	1	1	1	1	1	1	1
4	Sensor housing	1	1	1	1	1	1	1	1
	O-ring	1	1	1	1	1	1	1	1
5	Body for flow pipe	1	1	1	1	1	1	1	1

Cable service kit

Pos.	Kit No	*98333102*
	Description	
-	Cable, 5 meter	1

VFI sensor with thread

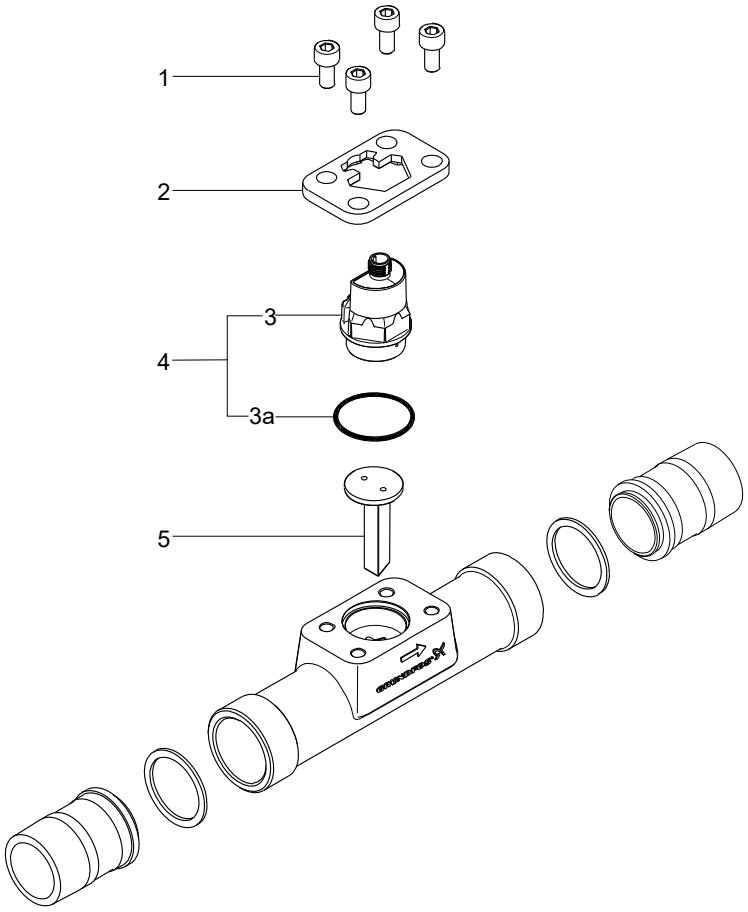

TM049507

VFI sensor with flange

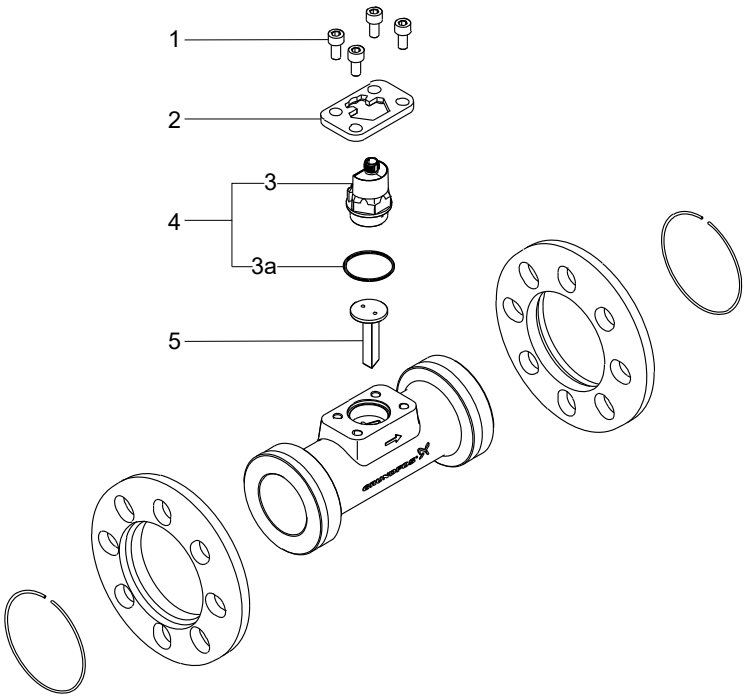

TM049508

79. SL

SL1, SLV

SL1.50, 0.9 - 1.5 kW, SLV.65, 0.9 - 1.5 kW

Clamp

Pos.	Kit No	96592050
	Description	
92	Clamp complete	1

Impeller

Pos.	Description	SL1.50			SLV.65		
		0.9 kW	1.1 kW	1.5 kW	0.9 kW	1.1 kW	1.5 kW
	Kit No	96115096	96115097	96115098	96115110	96115099	96115100
9a	Key 5 x 5 x 12	1	1	1	1	1	1
49	Impeller	1	1	1	1	1	1
66	Lock washer	1	1	1	1	1	1
188a	Screw M8 x 25	1	1	1	1	1	1

SmartSeal

Pos.	Kit No	96575022	96659160	96575023	96659161
	Description	NBR	FKM	NBR	FKM
		DN 65		DN 65/80	
-	SmartSeal for guide shoe	1	1	1	1

O-ring

Pos.	Kit No	96115107	96646049
	Description	NBR	FKM
26a	O-ring 32 x 4	1	1
37	O-ring 164 x 3	1	1
37a	O-ring 114 x 3	2	2
37b	O-ring 86 x 4	1	1
102	O-ring 19 x 1.5	2	2
107	O-ring 47 x 3	1	1
159	O-ring 32 x 2	1	1
185	O-ring 31 x 2	1	1
187	O-ring 28 x 2	1	1
194	Sealing washer	2	2
198	O-ring 34.2 x 3	1	1
-	O-ring 135 x 4 (not used)	1	1

Pin housing

Pos.	Description	Kit No
177	Pin housing with 7 poles	96778908

Plug for power connection for SL1 and SLV

Pos.	Description	Type	Connection	Kit No
176		A	1-phase	96747258
	Plug for power connection	A	Y	96747254
		A	D	96747257

Shaft seal

Pos.	Kit No	96106536	96645161
	Description	BQQP	BQQV
9a	Key	1	1
66	Lock washer	1	1
105	Shaft seal cartridge	1	1
188a	Screw M8 x 25	1	1
194	Sealing washer	2	2

Upper guide rail holder

Pos.	Kit No	96592037	96829357
	Description	DN 65/DN 80	DN 65/DN 80
-	Upper guide rail holder	1	1
		Before 1044 cast iron	After 1044 St.steel

Lifting bracket

Pos.	Description	Kit No	96690420
		Frame	1.1-1.5 kW / 1.5-2 HP
188a	Screw		2
190	Lifting bracket		1

Bearing

Pos.	Description	Kit No	98682345
		Frame	0.9-1.5 kW
153	Bearing		1
154	Bearing		1

SL1, 0.9 - 1.5 kW

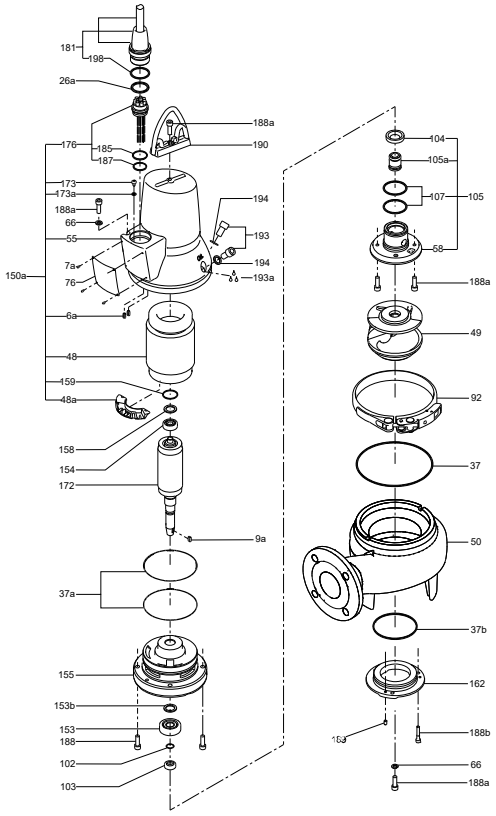

TM027363

SLV, 0.9 - 1.5 kW

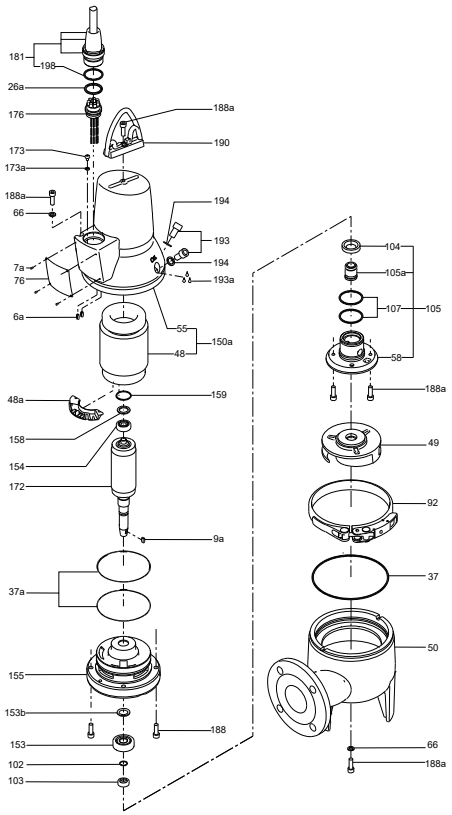

TM027364

SL1.50, SL1.80, SL1.100 from 2.2 kW/3 HP, SLV.65, SLV.80, SLV.100 from 2.2 kW/3 HP

Impeller-fixing parts

Pos.	Description	2-pole	2.2 - 4.0 kW / 3.0 - 5.5 hp	5.5 - 11.0 kW / 4.0 - 15.0 hp
		4-pole	1.1 - 2.2 kW / 1.5 - 3.0 hp	3.0 - 7.5 kW / 4.0 - 10.0 hp
		Kit No	*96102365*	*96102366*
9a	Key		1	1
66	Washer		1	1
157	Corrugated spring		1	1
188a	Screw		1	1

Single-channel Impeller

Pos.	Description	Free passage	80	50	80	50	80	50	80
		2-pole		2.2		3.0		4.0	
		4-pole	1.5		2.2		3.0		5.5
		Cast iron	*96091222*	*96091219*	*96091223*	*96091220*	*96091224*	*96091221*	*96091226*
49	Impeller		1	1	1	1	1	1	1
49c	Wear ring for impeller		1	1	1	1	1	1	1

Pos.	Description	Free passage	100	80	100
		2-pole			
		4-pole	5.5	7.5	7.5
		Cast iron	*96091229*	*96091227*	*96091230*
49	Impeller		1	1	1
49c	Wear ring for impeller		1	1	1

SuperVortex impeller

Pos.	Description	Free passage	65	80	65	80	100	65.40/80.40	80.40
		2-pole	2.2		3.0	3.0		4.0	
		4-pole		2.2			3.0		4
		Cast iron	*96886437*	*96812794*	*96886439*	*96886439*	*96886453*	*96886441*	-
		Stainless steel	-	*97759200*	-	-	*97759206*	-	*97759201*
49	Impeller		1	1	1	1	1	1	1

Pos.	Description	Free passage	100	100		80	100	80	80
		2-pole							
		4-pole	4.0	5.5	6.0	7.5	7.5	9.2	11
		Cast iron	*96886456*	*96882380*	*96812823*	*96812827*	*96882475*	*96812831*	*96812654*
		Stainless steel	*97759207*	*97759208*	*97759202*	*97759203*	*97759209*	*97759204*	*97759205*
49	Impeller		1	1	1	1	1	1	

S-tube impeller

Please check Grundfos Product Center.

Tube impeller "Generation A"

Pos.	Description	SL1 100.75.4
		97783819
49	Impeller 50Hz SE1.100.75.4, tube catph.	1
49C	Wear ring for impeller SE1.100	1
58	Cover for oil chamber D, D235, catap	1

Wear ring (SL1)

Please check Grundfos Product Center.SLV without sensor

SL1 without sensor

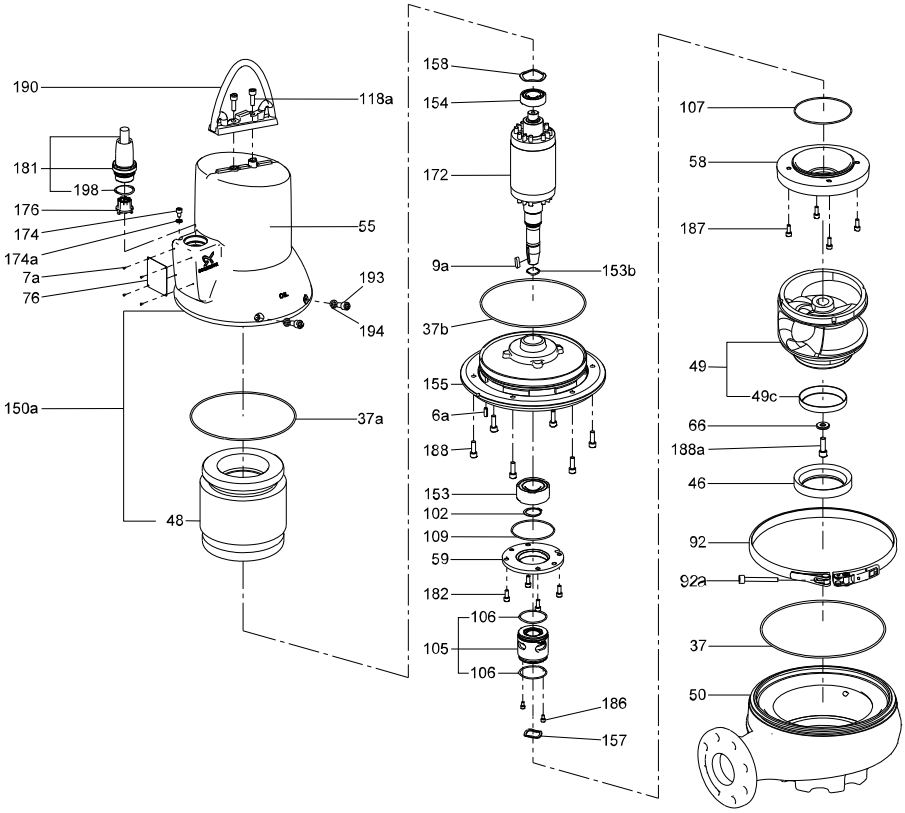

TM042777

SL1 with sensors

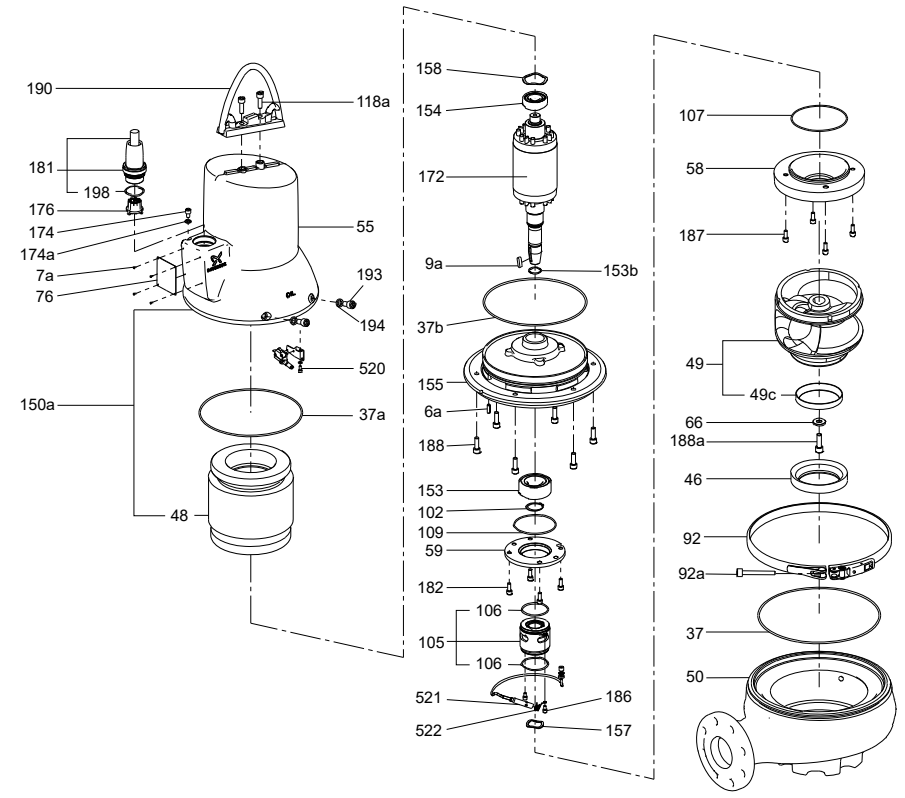

TM042778

SL1.50, SL1.80, SL1.100 from 2.2 kW/3 HP, SLV.65, SLV.80, SLV.100 from 2.2 kW/3 HP

Moisture switch

Pos.	Description	Kit No
		96817995
520	Moisture switch calibrated	1
	Screw	2
	Nut	2
	Connector	3
	Connector	3
	Screw combined slot torx straight	2
	Guard for moisture switch	1

O-ring

Pos.	Description	2-pole	2.2 - 3.0 kW / 1.5 - 3 HP	4.0 kW / 5.5 HP	6.0 - 7.5 kW / 8-10 HP	9.2 - 11 kW / 12.5 - 15 HP
		4-pole	1.1 - 2.2 kW / 1.5 - 3 HP	-	3.0 - 5.5 kW / 4 - 7.5 HP	7.5 kW / 10 HP
		NBR, Kit No	*96873520*	*96873521*	*96873542*	*96873543*
37	O-ring		1	1	1	1
37a	O-ring		1	1	1	1
37b	O-ring		1	1	1	1
102	O-ring		1	1	1	1
106	O-ring		2	2	2	2
107	O-ring		1	1	1	1
109	O-ring		1	1	1	1
194	Sealing washer		2	2	2	2
198	O-ring		1	1	1	1

Shaft seal

Pos.	Description	2-pole	2.2 - 4.0 kW / 3 - 5.5 HP	6.0 - 11 kW / 8 - 15 HP
		4-pole	1.1 - 2.2 kW / 1.5 - 3.0 HP	3.0 - 7.5 kW / 4 - 10 HP
		Rubber type	NBR	NBR
		Kit No	*96102360*	*96102361*
105	Shaft seal cartridge		1	1
107	O-ring	110 x 3	1	1
		134.5 x 3	1	1
		160 x 3	1	1
153b	O-ring	17.0 x 2.4	1	1
		28 x 2	1	1
157	Corrugated spring		1	1

Wear rings (SL1)

Pos.	Description	Free passage	Ø50/2"	Ø80/3"	Ø100/4"
		Rubber type	NBR	NBR	NBR
		Kit No	*96102362*	*96102363*	*96102364*
46	Seal ring		1	1	1
49c	Wear ring		1	1	1

SL1 without sensor

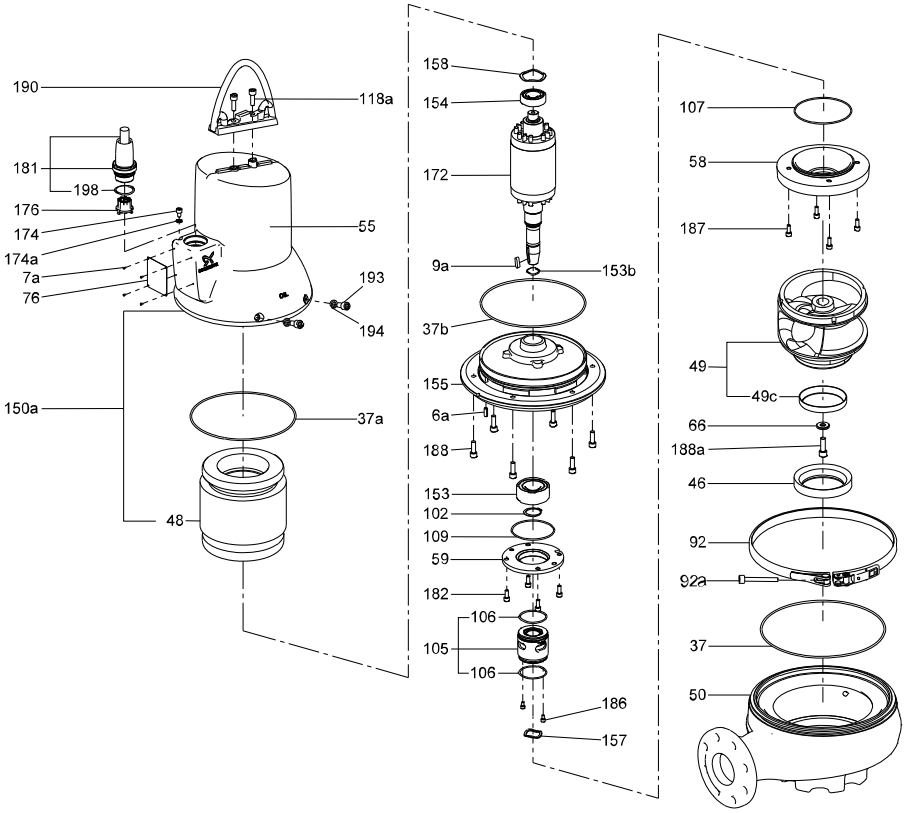

TM042777

SL1 with sensors

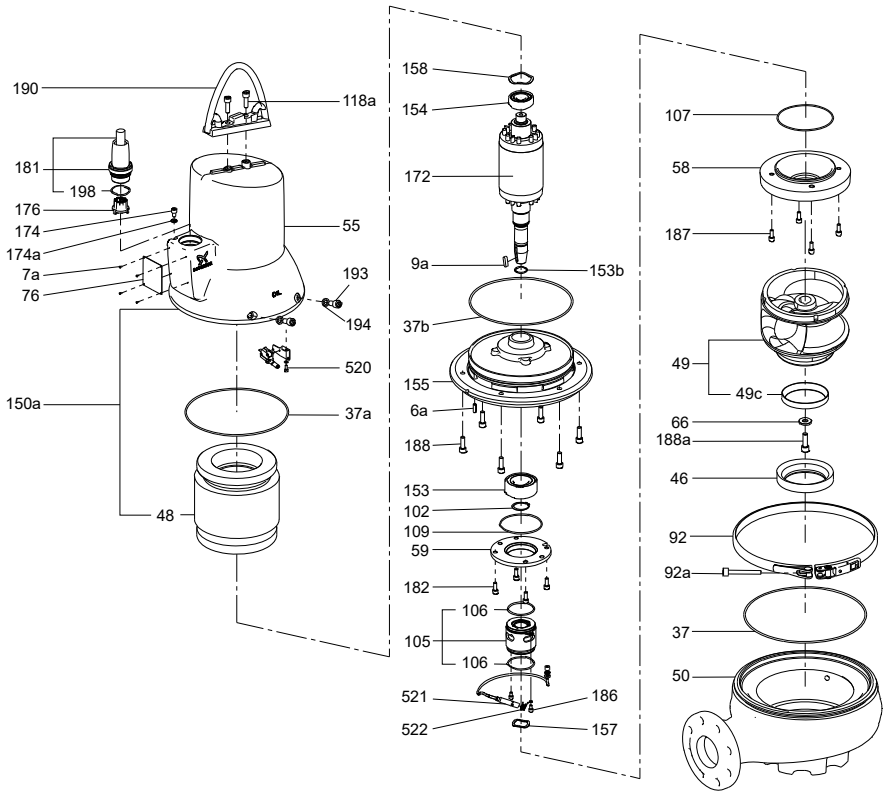

TM042778

Bearing

Pos.	Description	2-pole	2.2 - 3.0 kW / 3 - 4 HP	4.0 - 7.5 kW / 5.5 - 10 HP	9.2 - 11 kW / 12.5 - 15 HP
		4-pole	1.1 - 2.2 kW / 1.5 - 3 HP	3.0 - 5.5 kW / 4 - 7.5 HP	7.5 kW / 10 HP
		Kit No	*96690703*	*96904928*	*96690705*
153	Bearing D-end		1	1	1
154	Bearing N-end		1	1	1

Clamp

Pos.	Description	2-pole	2.2 - 3.0 kW / 3 - 4 HP	4.0 - 7.5 kW / 5.5 - 10 HP	9.2 - 11 kW / 12.5 - 15 HP
		4-pole	1.1 - 2.2 kW / 1.5 - 3 HP	3.0 - 5.5 kW / 4 - 7.5 HP	7.5 kW / 10 HP
		Kit No	*96592061*	*96592063*	*96592064*
92	Clamp		1	1	1

Guide shoe

Description	Outlet	DN 80	DN 80/100	DN 100	DN 100/150	DN 150
	Rubber type	NBR	NBR	NBR	NBR	NBR
	Kit No	*96592058*	*96611611*	*96592056*	*96611613*	*96592060*
Guide shoe		1	1	1	1	1
SmartSeal		1	1	1	1	1

Lifting bracket

Pos.	Description	2-pole	2.2 - 4 kW / 3 - 5.5 HP	6 - 11 kW / 8 - 15 HP
		4-pole	1.1 - 4 kW / 1.5 - 5.5 HP	5.5 - 7.5 kW / 7.5 - 10 HP
		Kit No	*96873469*	*96873519*
190	Lifting bracket		1	1
188a	Screw		2	2

SmartSeal for auto coupling

Description	Outlet	DN 65	DN 65/80	DN 80	DN 80/100	DN 100	DN 100/150	DN 150
	Rubber type	NBR	NBR	NBR	NBR	NBR	NBR	NBR
	Kit No	*96575022*	*96575023*	*96575024*	*96575025*	*96575027*	*96575028*	*96575029*
SmartSeal		1	1	1	1	1	1	1

Lifting bracket

Pos.	Description	Kit No	*96690428*
		Frame	2.2 - 3 kW, 2-pole / 3-4 HP 1.5 - 2.2 kW, 4-pole / 2-3 HP
188a	Screw		2
190	Lifting bracket		1

Water-in-oil sensor

Pos.	Description	Type	50 Hz ATEX-approved	60 Hz FM-approved
		Kit No	*96904929*	*97717977*
521	Disc spring		4	4
	Rubber bush		1	1
	Washer for cable-entry		1	1
	Sensor holder		1	1
	Sensor unit complete		1	1

SLV without sensor

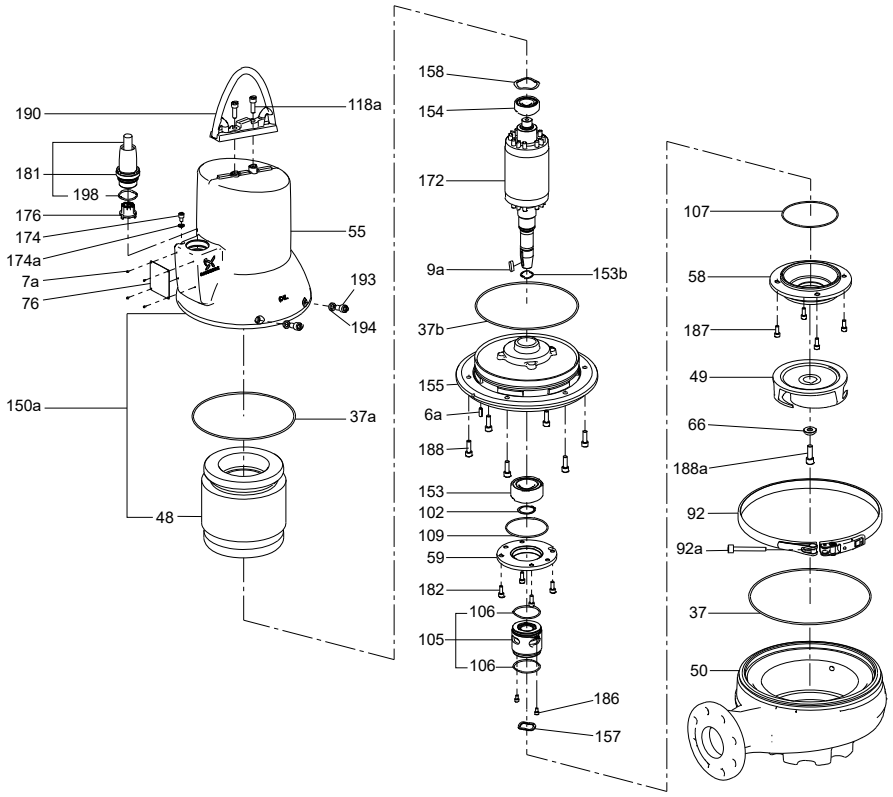

TM042779

SLV with sensors

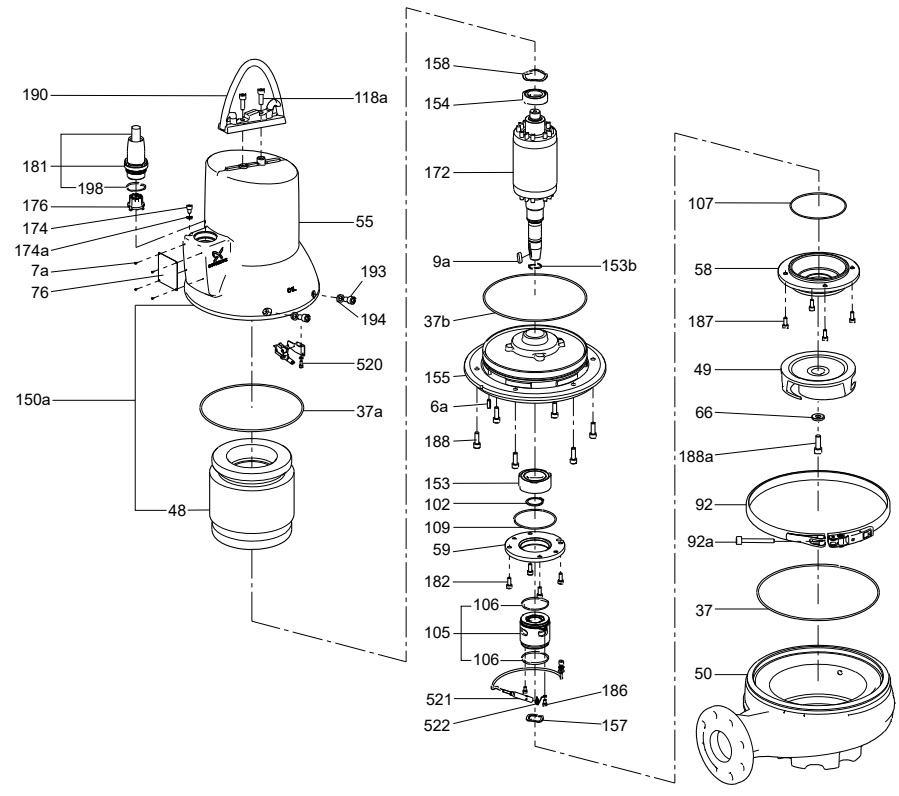

TM042780

Cable, 50 Hz

Pos.		Description/length	10 m	15 m	20 m	25 m
181	2.2-3 kW, 2-pole / 3-4 HP 1.5-2.2 kW, 4-pole / 2-3 HP	Standard	*96591649*	*96659473*	*96591660*	*96689953*
		Standard D	-	-	-	-
		Ex	*96689976*	*96689977*	*96689978*	*96689979*
		Ex D	-	-	-	-
		Screened Ex	*96102486*	*96689980*	*96102488*	*96102489*
	6-11 kW, 2-pole / 8-15 HP, 2-pole 3-7.5 kW, 4-pole / 4-10 HP, 4-pole	Standard	*96689954*	*96689955*	*96689956*	*96689957*
		Standard D	*96689958*	*96689959*	*96689970*	*96689971*
		Ex	*96102482*	*96102483*	*96102484*	*96102485*
		Ex D	*96102498*	*96102499*	*96102500*	*96102501*
		Screened Ex D	*96102490*	*96102491*	*96102492*	*96102493*
		Screened Ex Y	*96769058*	*96769060*	*96769061*	*96769062*

Cable, 60 Hz

Pos.		Description/length	10 m / 33 ft	15 m / 49 ft	20 m / 66 ft	25 m / 82 ft
181	2.2-3 kW, 2-pole / 3-4 HP, 2-pole 1.5-2.2 kW, 4-pole / 2-3 HP, 4-pole	**7 x 1.5 mm²/AWG16 DOL**				
		Standard	*97634728*	*97634909*	*97634910*	*97634911*
		Ex	*97634729*	*97634933*	*97634934*	*97634935*
		Screened Ex	*97634730*	*97634957*	*97634958*	*97634959*
	6-7.5 kW, 2-pole / 8-10 HP, 2-pole 3-5.5 kW, 4-pole / 4-7.5 HP, 4-pole	**4 x 2.5 mm²/AWG14 + 3 x 1.5 mm²/AWG16 DOL**				
		Standard	*97634902*	*97634921*	*97634922*	*97634923*
		Ex	*97634905*	*97634945*	*97634946*	*97634947*
		Screened Ex D	*97634908*	*97634969*	*97634970*	*97634971*
		Screened Ex Y	*97634907*	*97634963*	*97634964*	*97634965*
	9.2-11 kW, 2-pole / 12-15 HP, 2-pole 7.5 kW, 4-pole / 10 HP, 4-pole	**7 x 2.5 mm²/AWG14 + 3 x 1.5 mm²/AWG16 SD**				
		Standard	*97634903*	*97634927*	*97634928*	*97634929*
		Ex	*97634906*	*97634951*	*97634952*	*97634953*
		Screened Ex D	*97634908*	*97634969*	*97634970*	*97634971*
		Screened Ex Y	*97634907*	*97634963*	*97634964*	*97634965*

Pin housing

Pos.	Description	Kit No
177	Pin housing with 7 poles	*96778908*
	Pin housing with 7 connector pins in 10-pole housing	*97769613*
	Pin housing with 10 poles	*96778912*

Upper guide rail holder

Pos.	Kit No	*96592037*	*96829357*	*96592038*	*96829358*
	Description	**DN 65/DN 80**	**DN 65/DN 80**	**DN 100/DN 150**	**DN 100/DN 150**
-	Upper guide rail holder	1	1	1	1
		Before 1044 cast iron	After 1044 st.steel	Before 1044 cast iron	After 1044 st.steel

SLV without sensor

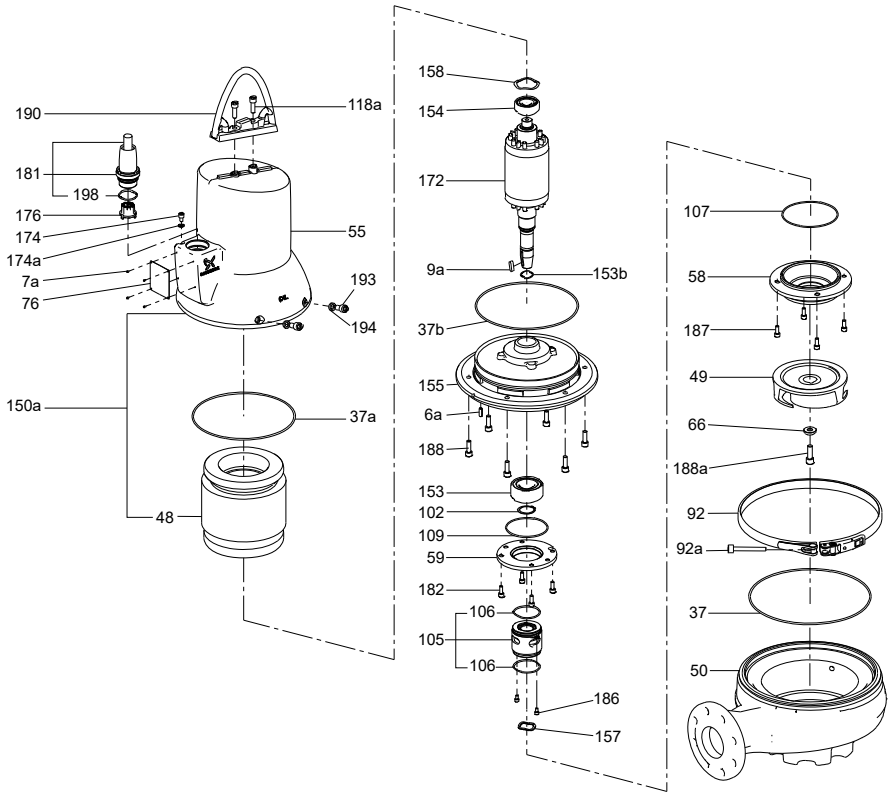

TM042779

SLV with sensors

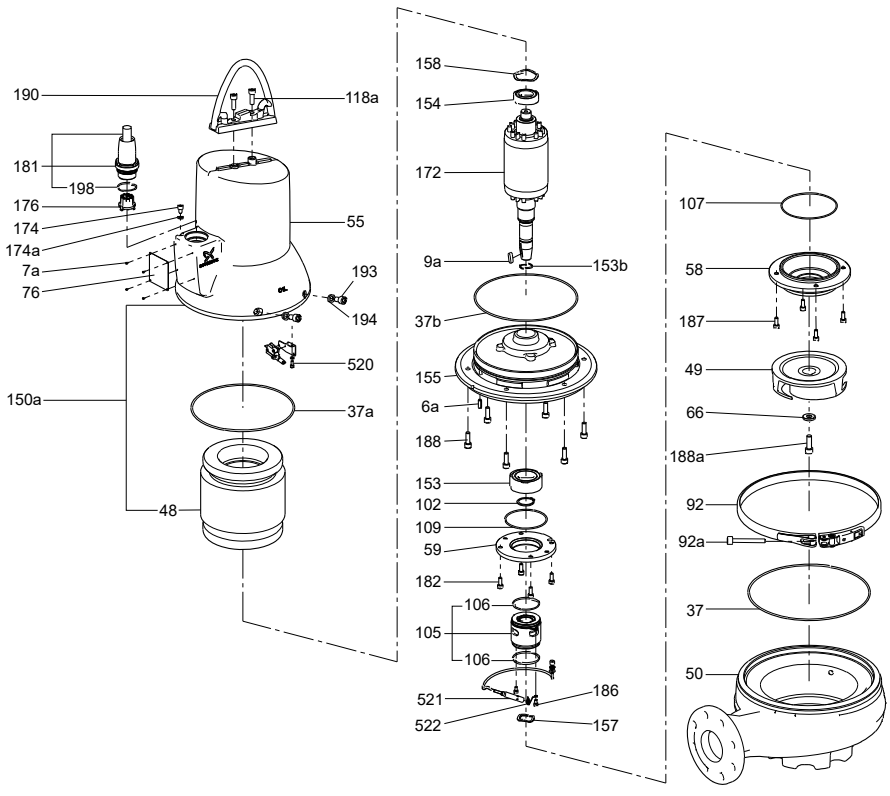

TM042780

SL 1, SLV AUTOADAPT

50 Hz

Bearing

Pos.	Description	Type	0.9-1.5 kW
		Kit No	98682345
153	Bearing		1
154	Bearing		1

Clamp

Pos.	Kit No	96592050
	Description	
92	Clamp complete	1

Lifting bracket

Pos.	Description	Kit No	96984147
188a	Screw M8 x 25		1
190	Lifting bracket		1

Impeller

Pos.	Description	SL1.50			SLV.65		
		0.90 kW	1.1 kW	1.5 kW	0.9 kW	1.1 kW	1.5 kW
	Kit No	96115096	96115097	96115098	96115110	96115099	96115100
9a	Key 5 x 5 x 12	1	1	1	1	1	1
49	Impeller	1	1	1	1	1	1
66	Lock washer	1	1	1	1	1	1
188a	Screw M8 x 25	1	1	1	1	1	1

O-ring

Pos.	Description	0.9 - 1.5 kW	
		NBR	FKM
	Kit No	96115107	96646049
26a	O-ring	1	1
37	O-ring	1	1
37a	O-ring	2	2
102	O-ring	2	2
107	O-ring	1	1
159	O-ring	1	1
185	O-ring	1	1
187	O-ring	1	1
194	Sealing washer	2	2
198	O-ring	1	1
532	Silica gel	1	1

SmartSeal

Pos.	Kit No	96575022	96659160
	Description	NBR	FKM
		DN 65	
-	SmartSeal for guide shoe	1	1

Shaft seal

Pos.	Kit No	96106536	96645161
	Description	BQQP	BQQV
9a	Key	1	1
66	Lock washer	1	1
105	Shaft seal cartridge	1	1
188a	Screw M8 x 25	1	1
194	Sealing washer	2	2

Upper guide rail holder

Pos.	Kit No	96829357
	Description	DN 65/DN 80
-	Upper guide rail holder	1

SL1.50

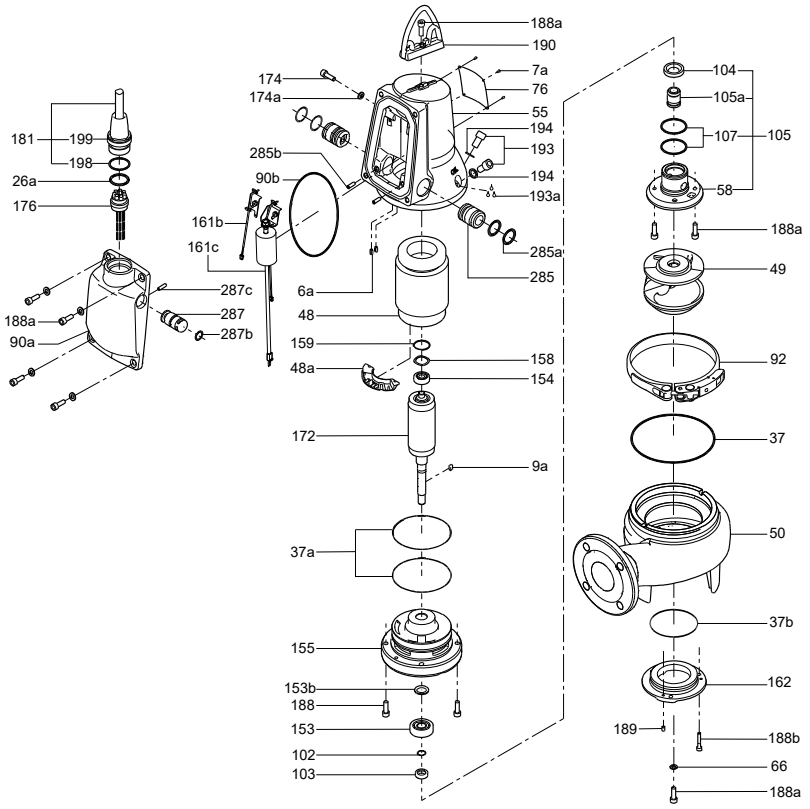

TM044799

SLV.65

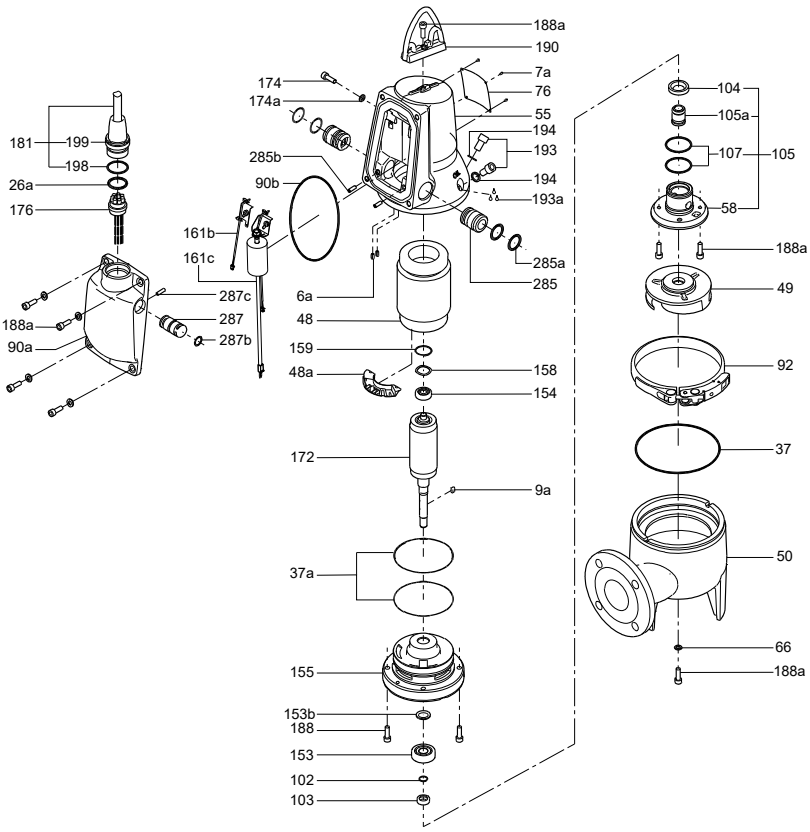

TM044800

Cable

Pos.	Description	Length	10		15		20		25	
		Type	Standard	Ex	Standard	Ex	Standard	Ex	Standard	Ex
181	Cable		*96591649*	*96689976*	*96659473*	*96689977*	*96591660*	*96689978*	*96689953*	*96689979*

Dry running sensor

Pos.	Description	Type	Standard	Ex
		Kit No	*96898083*	*96984131*
90b	O-ring 180 x 4		1	2
285	Dry-running sensor		1	1
285a	O-ring 30 x 3		2	1
285b	Set screw for sensor housing M6 x 18		1	1

Electronic controller

Pos.	Description	Type	Standard 1-ph.	Ex 1-ph.	Standard 3-ph.	Ex 3-ph.
		2-pole	0.9 - 1.1 kW	0.9 - 1.1 kW	0.9 - 1.5 kW	0.9 - 1.5 kW
		Kit No	*96898085*	*96984145*	*96898086*	*96984146*
90a	Cover with electronic unit		1	1	1	1
90b	O-ring 180 x 4		1	1	1	1

Level sensor

Pos.	Description	Type	Standard	Ex
		Kit No	*96898082*	*96984130*
90b	O-ring 180 x 4		1	1
287	Level sensor		1	1
287b	O-ring 20 x 3		1	1
287c	Set screw for sensor housing M6 x 18		1	1

Power plug

Pos.	Description	Type	Standard and Ex
		Kit No	*96984144*
90b	O-ring 180 x 4		1
181	Outer plug for power connection		1

PT1000 with bracket

Pos.	Description	Type	Standard 3-ph. and Ex
		Kit No	*97698437*
161b	PT1000 sensor with bracket		1
90b	O-ring 180 x 4		1

Run capacitor

Pos.	Description	Kit No	*96898084*
90b	O-ring 180 x 4		1
-	Hexagon nut M8		1
161c	Bracket with capacitor		1
161d	Star washer		1
161f	Screw M5 x10		1
288	Pt1000 sensor		1
-	Cable strip		2

SL1.50

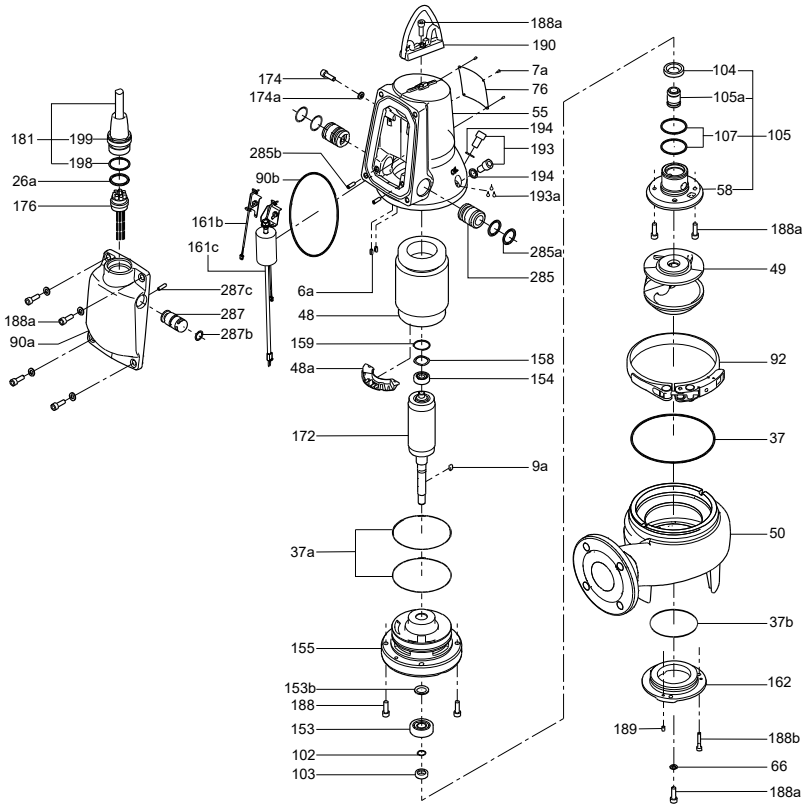

TM044799

SLV.65

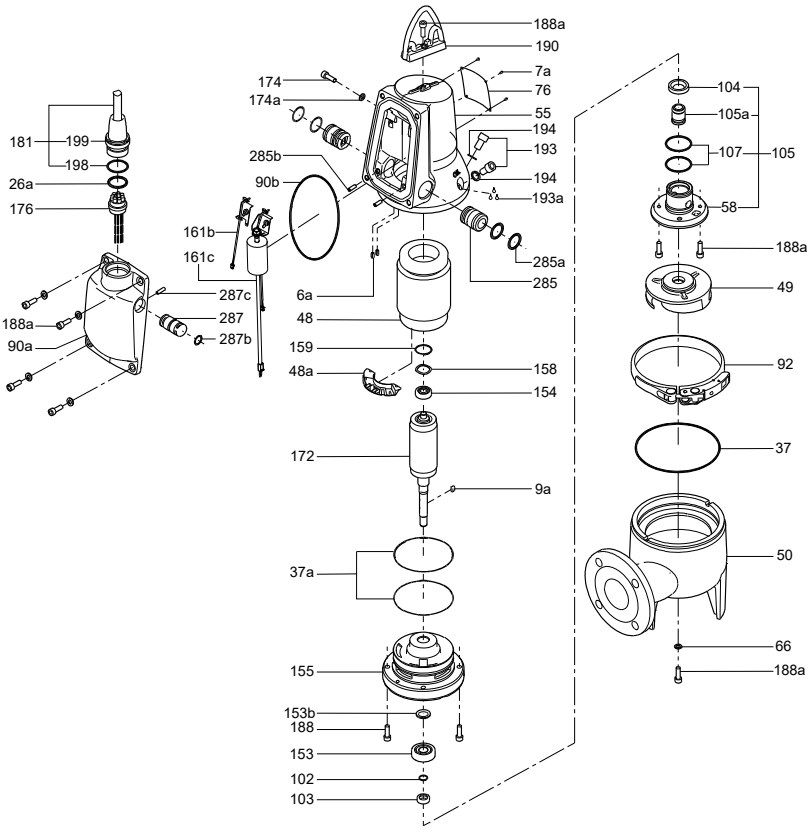

TM044800

80. Sololift+

WC, WC-1, WC-3

50 Hz

Hose

Pos.	Description		WC, WC-1, WC-3
	Kit No		96553016
415	Non-return valve body		1
416	Non-return valve cover		1
417	Non-return valve		1
418	Non-return valve		2
423	Hose clamp		1
424	Hose clamp		1
425	Hose clamp		1
426	Hose clamp		1
428	Strip		1
431	Gasket		2
432	Blanking disc		2
433	Discharge elbow		1
434	Discharge hose		1
435	Flexible connection		1
436	Union nut		2
	Outlet reducer	28/32	1
		25/32	1
		23/32	1

Microswitch

Pos.	Description	WC, WC-1, WC-3
	Kit No	96575698
161	Capacitor	1
422	Clip	2
463	Microswitch	1
466	Membrane	1

Top cover

Pos.	Description	WC	WC-1, WC-3
	Kit No	96553040	96553041
402	Cover	1	1
403	Gasket	1	1
404	Air vent cover	1	1
405	Carbon filter	1	1
419	Air vent valve	1	1
420	Hose clamp		1
427	Hose clamp		1
430	Flexible connection		1

Wear parts

Pos.	Description	WC, WC-1, WC-3
	Kit No	96553045
49	Impeller	1
66	Washer	1
67	Nut	1
439	Pin	1
440	Retainer for cutter	1
441	Cutter	1
442	Retaining ring	1

WC

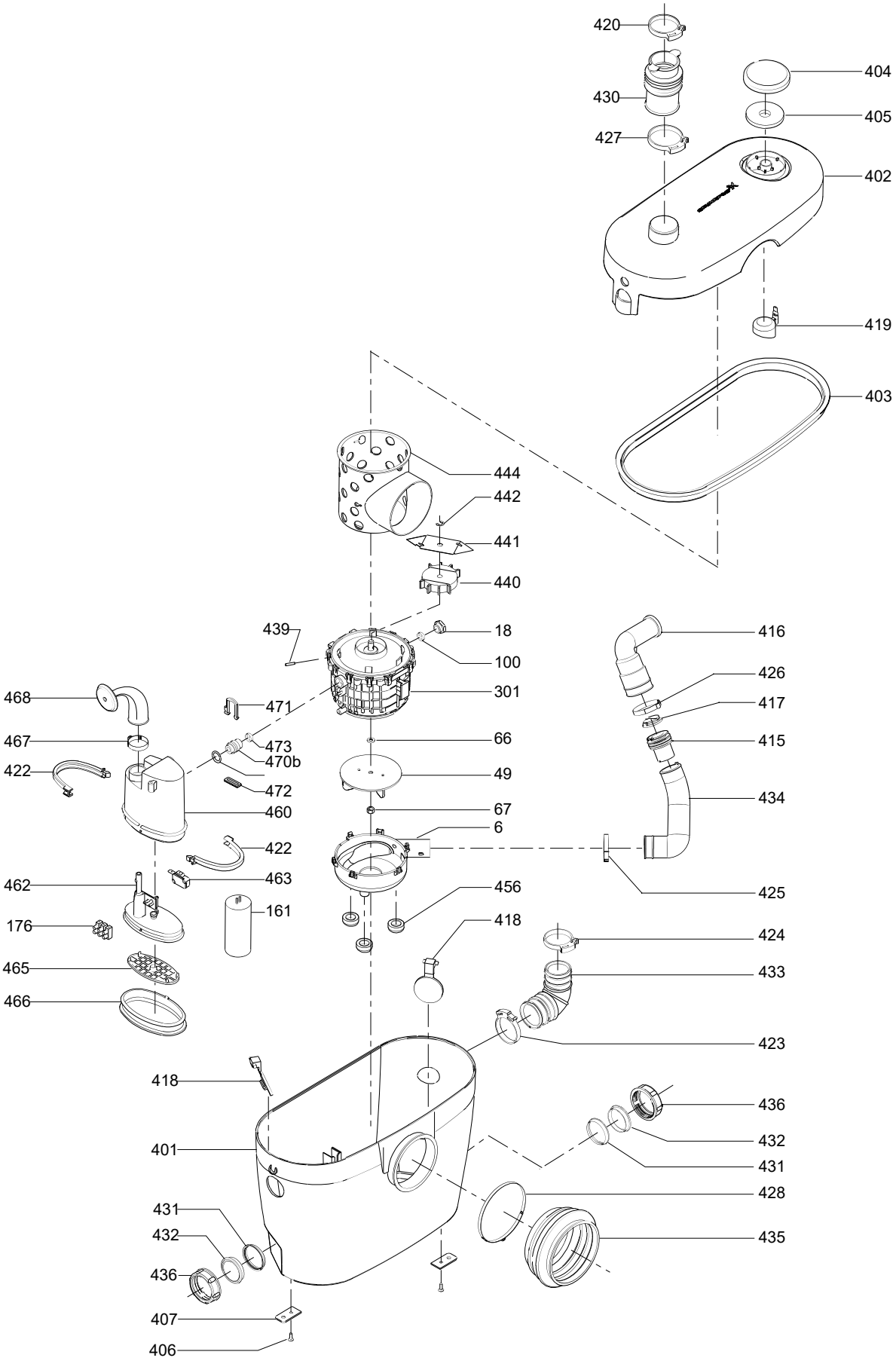
420
430
427
404
405
402
419
403
444
442
441
440
439
18
100
301
66
49
67
6
456
418
471
473
470b
472
460
422
463
161
468
467
422
462
176
465
466
416
426
417
415
434
425
424
433
423
418
436
432
431
428
435
401
431
432
436
407
406
TM029154

WC-1

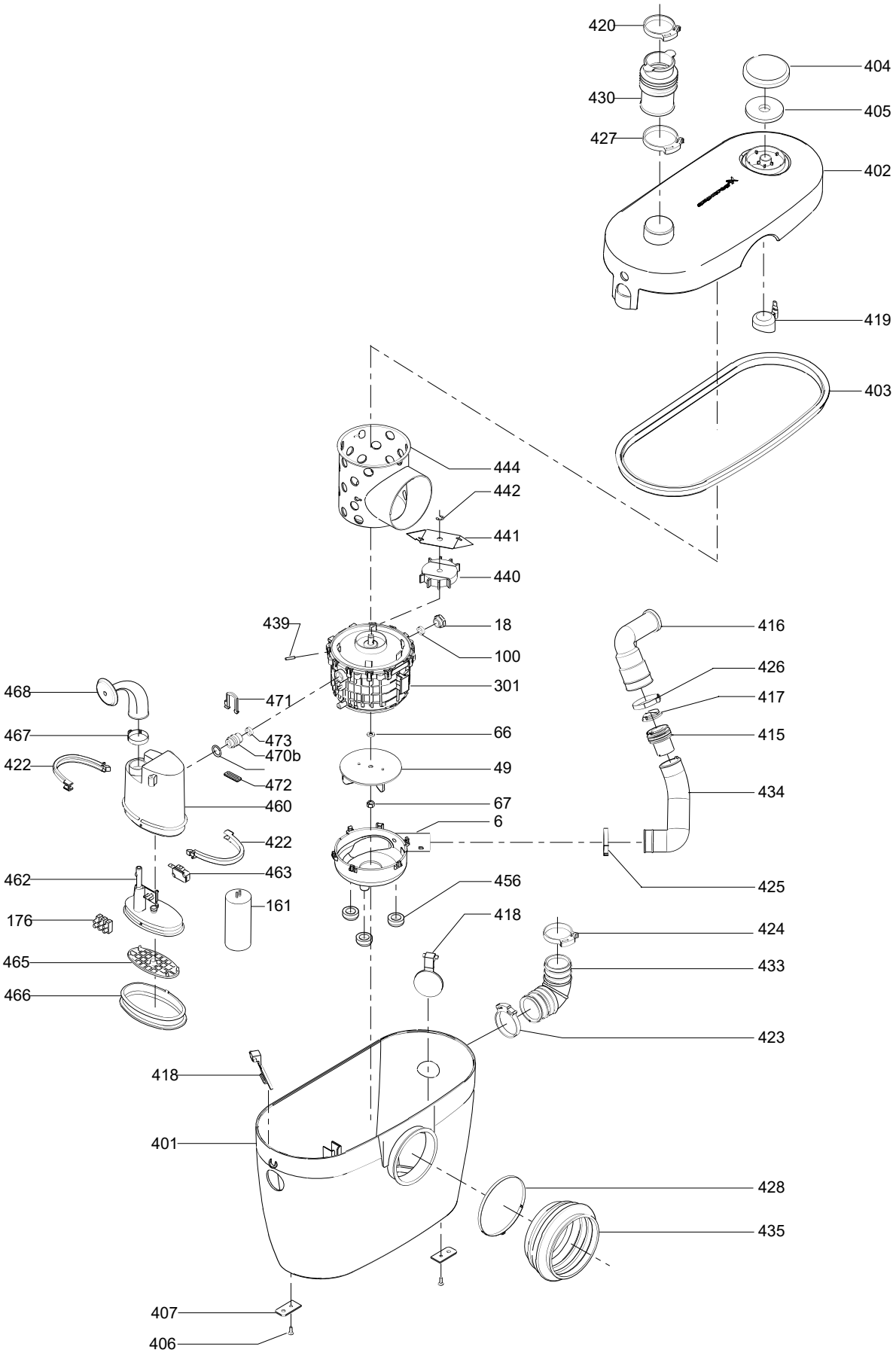
420
404
430
405
427
402
419
403
444
442
441
440
439
18
100
301
66
49
67
6
456
418
468
471
467
473
470b
422
472
460
422
463
462
161
176
465
466
418
401
407
406
416
426
417
415
434
425
424
433
423
428
435
TM029153

WC-3

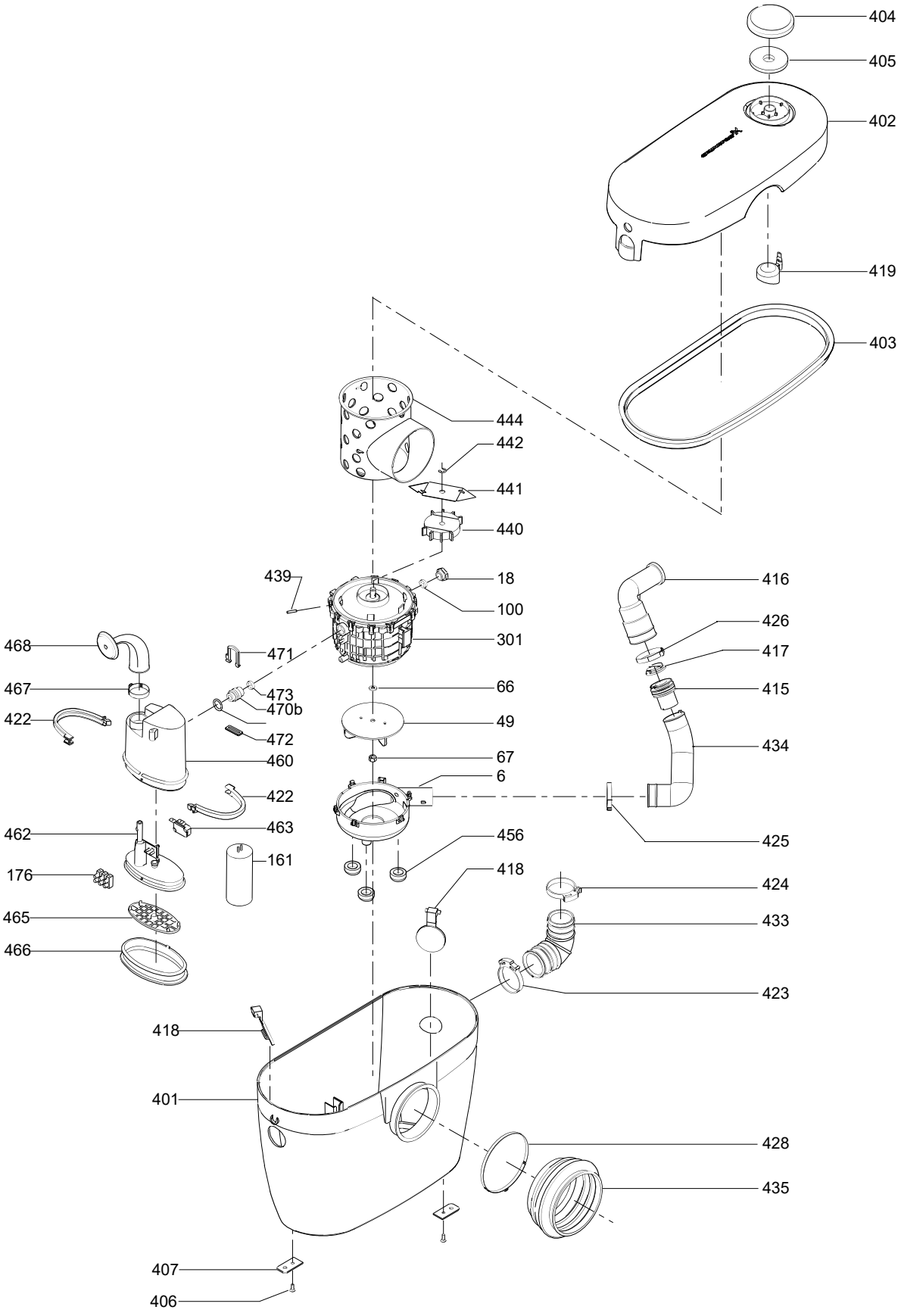
404
405
402
419
403
444
442
441
440
439
18
100
301
66
49
67
6
456
418
468
471
467
473
470b
422
472
460
422
462
463
161
176
465
466
418
401
407
406
416
426
417
415
434
425
424
433
423
428
435
TM029152

CWC-3, C-3

50 Hz

Hose

Pos.	Description		CWC-3, C-3
	Kit No		96553017
415	Non-return valve body		1
416	Non-return valve cover		1
417	Non-return valve		1
418	Non-return valve		2
423	Hose clamp		1
424	Hose clamp		1
425	Hose clamp		1
426	Hose clamp		1
428	Strip		1
431	Gasket		2
432	Blanking disc		2
433	Discharge elbow		1
434	Discharge hose		1
435	Flexible connection		1
436	Union nut		2
	Outlet reducer	28/32	1
		25/32	1
		23/32	1

Microswitch

Pos.	Description	C-3	CWC-3
	Kit No	96575710	96575699
161	Capacitor	1	1
422	Clip	2	2
463	Microswitch	1	1
466	Membrane	1	1

Top cover

Pos.	Description	CWC-3, C-3
	Kit No	96553042
402	Cover	1
403	Gasket	1
404	Air vent cover	1
405	Carbon filter	1
419	Air vent valve	1
420	Hose clamp	1
427	Hose clamp	1
430	Flexible connection	1

Wear parts

Pos.	Description	CWC-3, C-3
	Kit No	96553046
49	Impeller	1
66	Washer	1
67	Nut	1
439	Pin	1
440	Retainer for cutter	1
441	Cutter	1
442	Retaining ring	1

CWC-3

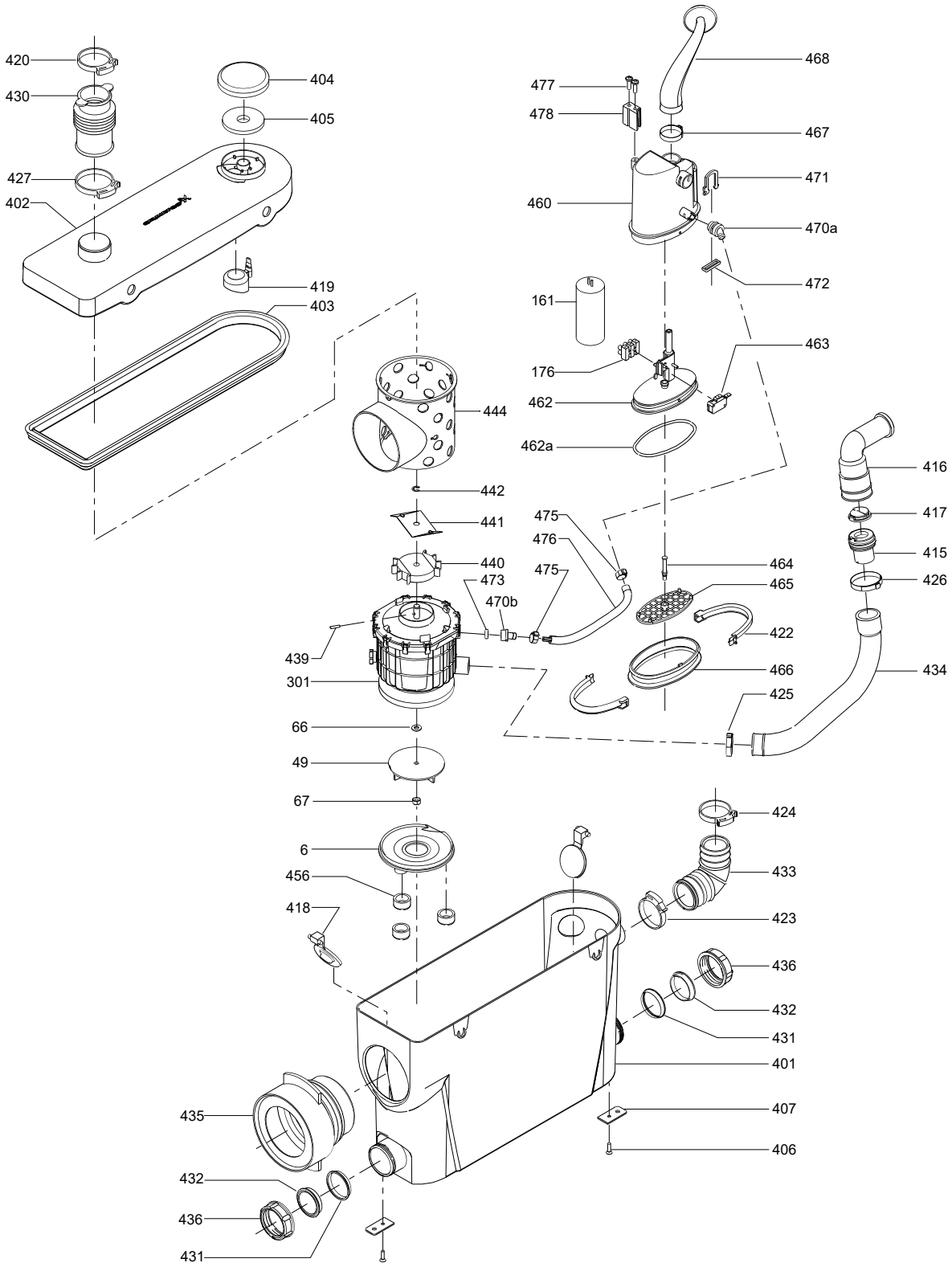
420
430
427
402
404
405
419
403
444
442
441
440
473
470b
439
301
66
49
67
6
456
418
435
432
436
431
424
433
423
436
432
431
401
407
406
468
477
478
467
471
460
470a
472
161
463
176
462
462a
475
476
475
464
465
422
466
425
416
417
415
426
434
TM029155

C-3

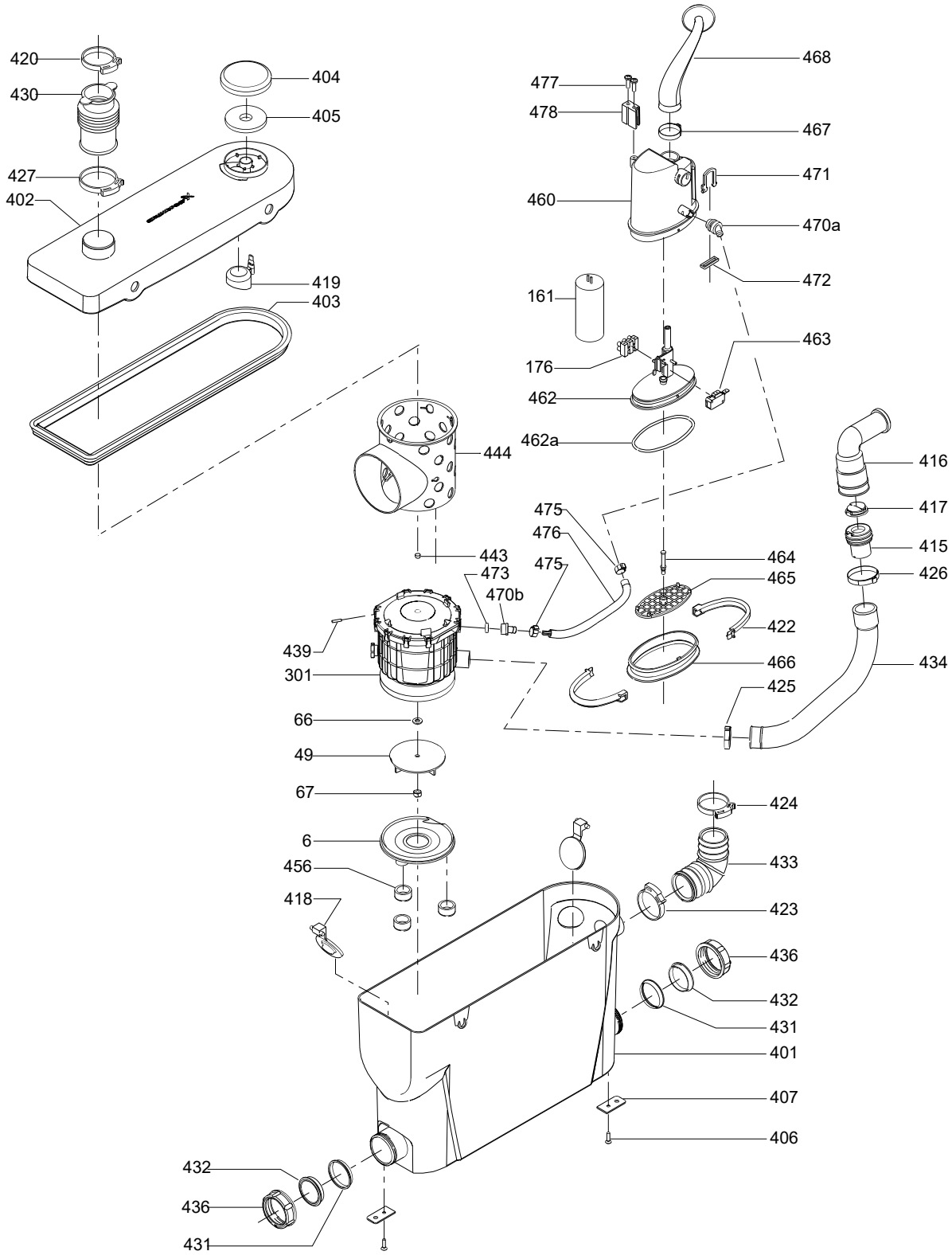
420
430
427
402
404
405
419
403
468
477
478
467
471
460
470a
472
161
463
176
462
462a
444
443
473
470b
475
476
475
464
465
422
466
425
416
417
415
426
434
439
301
66
49
67
6
456
418
424
433
423
436
432
431
401
407
406
432
436
431
TM029156

D-3, PWC-3

Hose

Pos.	Parts	Description		D-3	PWC-3
		Kit No		96553018	96553019
416a	415	Non-return valve body		1	1
	415a	Non-return valve body		1	-
	416	Non-return valve cover		1	-
	417	Non-return valve		1	1
	418	Non-return valve		1	2
	420	Hose clamp		2	2
	423	Hose clamp		-	1
	424	Hose clamp	20/32	-	1
			25/40	-	1
	425	Hose clamp		1	2
	425a	Hose clamp		-	1
	426	Hose clamp		1	-
	427	Hose clamp		1	2
	428	Hose clamp		2	1
	429	Hose clamp	90/110	-	1
	430	Flexible connection		1	2
	430a	Flexible connection		1	-
	432a	O-ring		-	2
	432	Box plug		-	2
	433	Discharge elbow		1	1
433a				-	1
434		Discharge hose		1	1
435		Flexible connection		-	1

Microswitch

Pos.	Description	D-3	PWC-3
	Kit No	96575711	96575712
161	Capacitor	1	1
422	Clip	2	2
463	Microswitch	1	1
466	Membrane	1	1

Top cover

Pos.	Description	D-3	PWC-3
	Kit No	96553043	96553044
402	Cover	1	1
402a	Screw	-	12
403	Gasket	1	1
404	Air vent cover	1	1
405	Carbon filter	-	1
409	Heat exchanger stop	-	1
419	Air vent valve/float switch	1	1

Wear parts

Pos.	Description	D-3	PWC-3
	Kit No	96553047	96553050
44	Grinder ring	-	1
45	Coupling	-	1
49	Impeller	1	1
66	Washer	1	-
67	Nut	1	1
188a	Screw	-	3

D-3

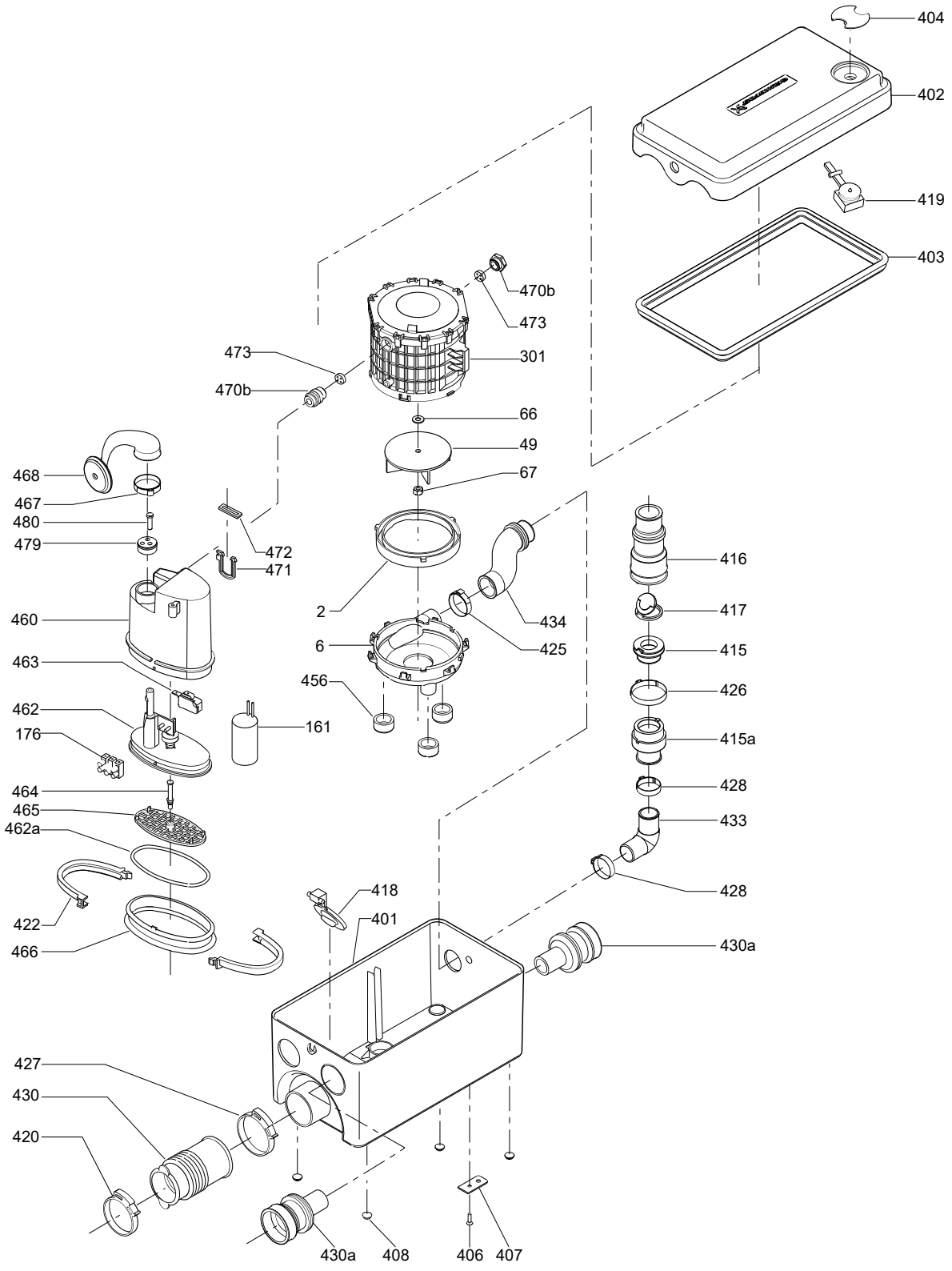
404
402
419
403
470b
473
473
301
470b
66
49
67
468
467
480
479
472
471
460
463
462
176
464
465
462a
422
466
2
6
456
161
434
425
416
417
415
426
415a
428
433
428
418
401
430a
427
430
420
430a
408
406
407
TM029311

PWC-3

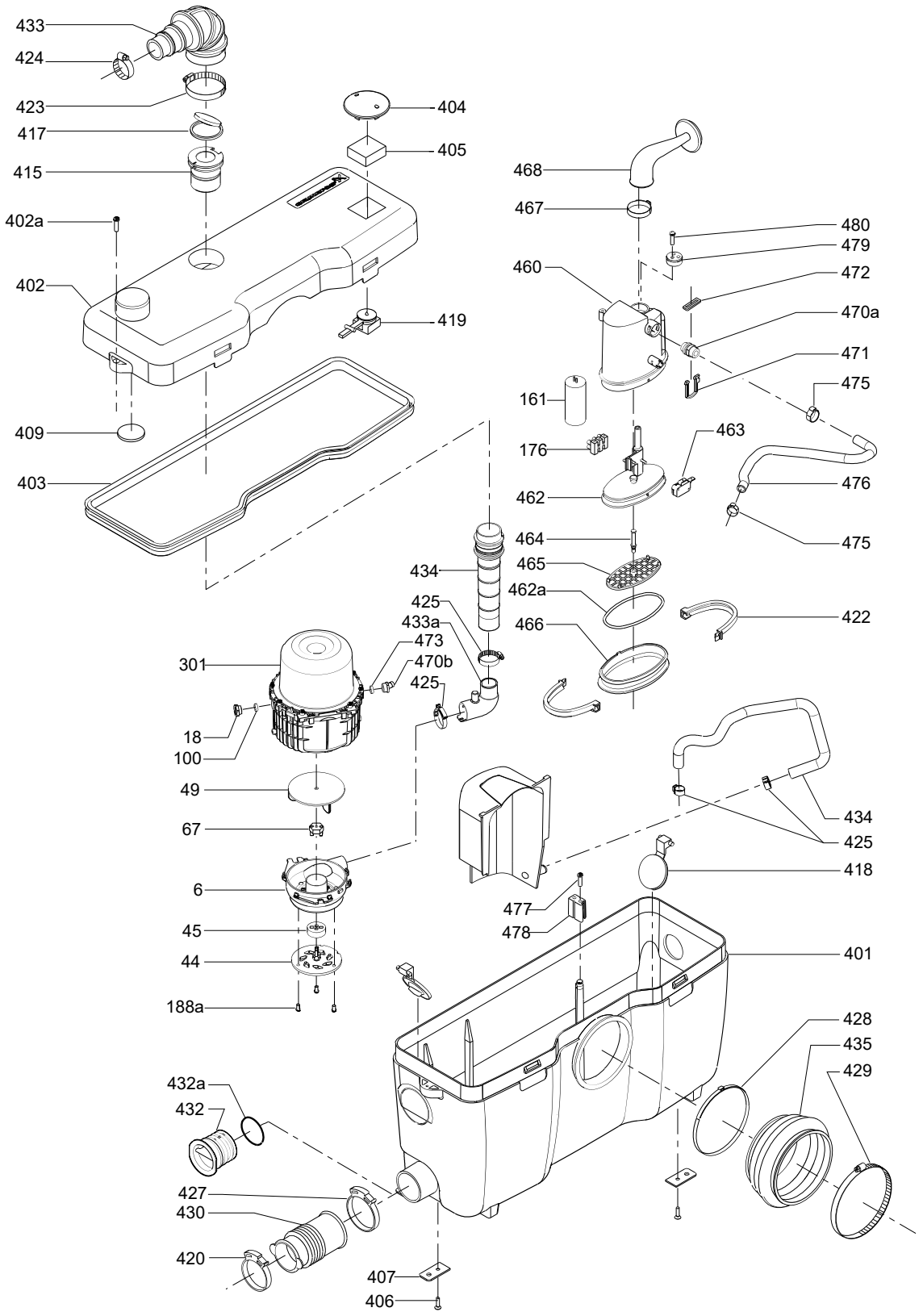
433
424
423
417
415
402a
402
409
403
404
405
419
468
467
480
479
460
472
470a
471
475
161
176
463
462
476
475
464
465
462a
466
422
434
425
433a
473
470b
425
301
18
100
49
67
6
45
44
188a
434
425
418
477
478
401
428
435
429
432a
432
427
430
420
407
406
TM029426

81. Sololift2

50 Hz

WC-1, WC-3, CWC-3

Discharge connector

Pos.	Description	WC-1, WC-3
	kit No	*98103367*
417	Non-return adapter	1
417a	O-ring	1
443	Discharge connector	1

Grinder

Pos.	Description/kit No	*97775349*
44a	Washer	3
44b	Nut	3
44	Grinder ring	1
45	Grinder head	1
49b	Cap	1
49c	V-ring	1
188	Screw	1

Motor

Pos.	Description/kit No	*97775341*	*97775348*
2	Pump housing	1	-
2c	Flange for ball	1	-
2b	Ball	1	-
44	Grinder ring	1	-
44a	Washer	3	-
44b	Nut	3	-
45	Grinder head	1	-
49	Impeller	1	-
49b	Impeller nut	1	-
49c	V-ring	1	-
66	Washer	1	-
68	Ring	1	-
156	Motor flange	1	-
156a	O-ring	1	-
156b	Screw	1	-
158	Retainer for printed-circuit board	1	-
159	Printed-circuit board	1	-
160	Cover for printed-circuit board	1	-
161	Capacitor	1	-
188	Screw	1	-
188c	Washer	1	-
301	Motor	1	1
301a	O-ring	1	1
306	Flange for pump housing	1	-
306a	O-ring	1	-
308b	Screw	3	-
481	Retainer for pressure switch	1	-
482	Pressure switch	1	-

Pressure switch

Pos.	Description/kit No	*97775344*
481	Retainer for pressure switch	1
482	Pressure switch	1

Printed-circuit board

Pos.	Description/kit No	*97775345*
159	Printed-circuit board	1

WC-3

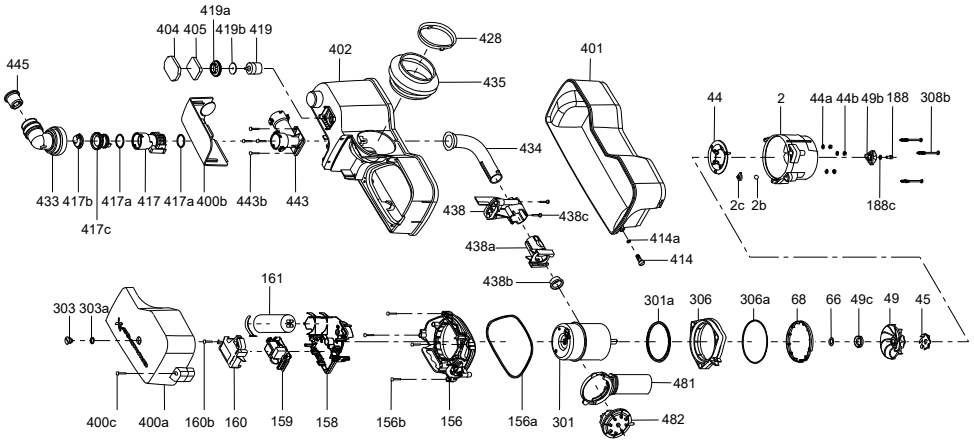

TM1040524

CWC-3

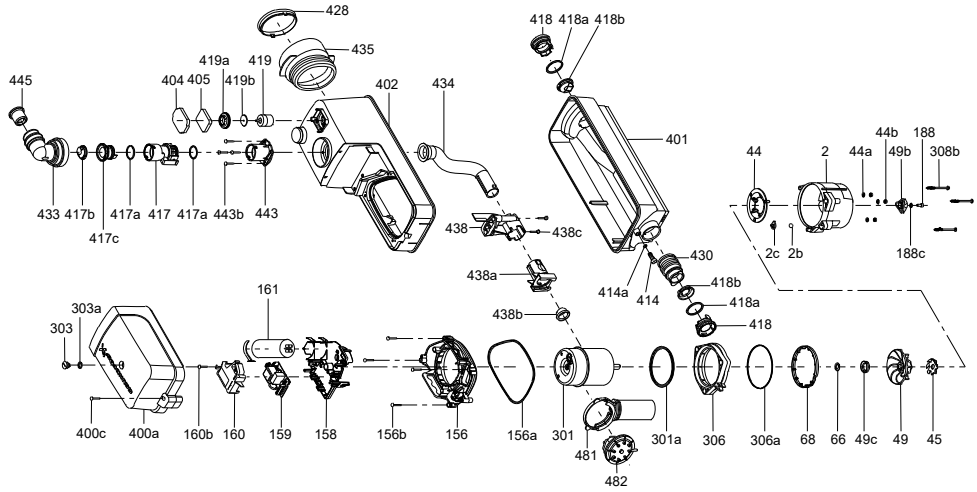

TM1040525

WC-1

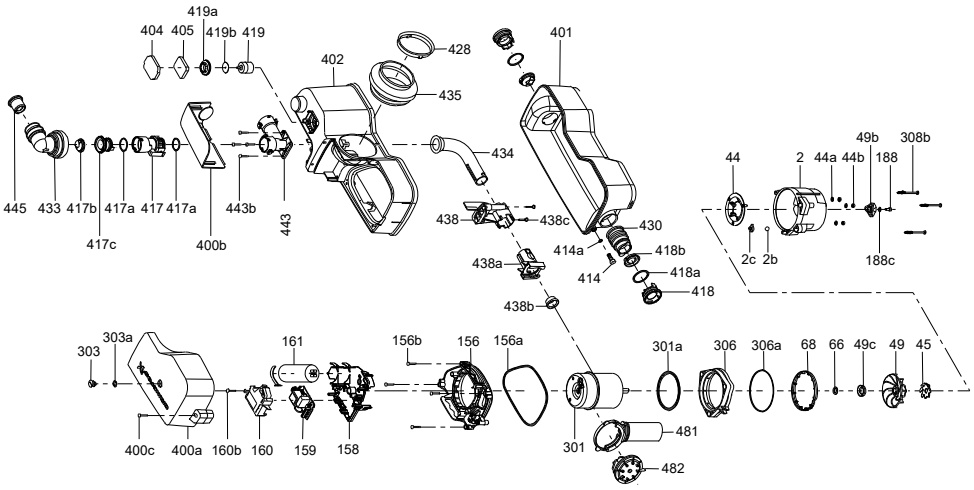

TM1040526

Capacitor

Pos.	Description/kit No	*97775374*
161	Capacitor	1

Carbon filter

Pos.	Description/kit No	*97775370*
404	Filter cover	1
405	Carbon filter	5

Cover

Pos.	Description	WC-1, WC-3
	Kit No	*97775304*
400b	Cover	1
-	Closing plug	1

Cover, Service

Pos.	Description	WC-1, WC-3	CWC-3
	Kit No	*97775355*	*97775356*
303	Plug	1	1
303a	O-ring	1	1
400a	Service cover	1	1
400c	Screw	1	1

Gasket for toilet connection

Pos.	Description	WC-1, WC-3	CWC-3
	Kit No	*97775368*	*97775369*
428	Hose clamp	1	1
435	Toilet connection	1	1
-	Clamp	1	-

Impeller

Pos.	Description/kit No	*97775350*
49	Impeller	1

Inlet adapter

Pos.	Description	WC-3, CWC-3
	Kit No	*97775378*
418	Inlet adapter	1
418a	O-ring	1
418b	Non-return flap valve	1

Non-return valve for outlet

Pos.	Description/kit No	*97775371*
417c	Non-return valve body	1
417a	O-ring	2
417b	Non-return flap	1

Rubber parts for inlet

Pos.	Description	WC-1	WC-3, CWC-3
	Kit No	*97775363*	*97775364*
430	Flexible connection	1	2
-	Clamp	2	4

Rubber parts for outlet

Pos.	Description/kit No	*97775366*
433	Elbow	1
-	Clamp	2
445	Reducer	1

Supply cable

Pos.	Description	Schuko	Australia
	Kit No	*97775377*	*97901607*
-	Supply cable	1	1

Tank

Pos.	Description	WC-1	WC-3	CWC-3
	Kit No	*97775359*	*97821579*	*97775360*
400b	Pipe cover	1	1	-
401	Tank bottom	1	1	1
402	Tank top	1	1	1
404	Filter cover	1	1	1
405	Carbon filter	1	1	1
414	Drain plug	1	1	1
414a	O-ring	1	1	1
418	Inlet adapter	-	2	2
418a	O-ring	-	2	2
418b	Non-return flap valve	-	2	2
419	Air vent valve	1	1	1
419a	Gasket	1	1	1
419b	Rubber washer	1	1	1
434	Discharge pipe	1	1	1
438	Fixing device	1	1	1
438a	Adapter	1	1	1
438b	Retaining ring	1	1	1
438c	Screw	2	2	2
443	Discharge connector	1	1	1
443b	Screw	4	4	4

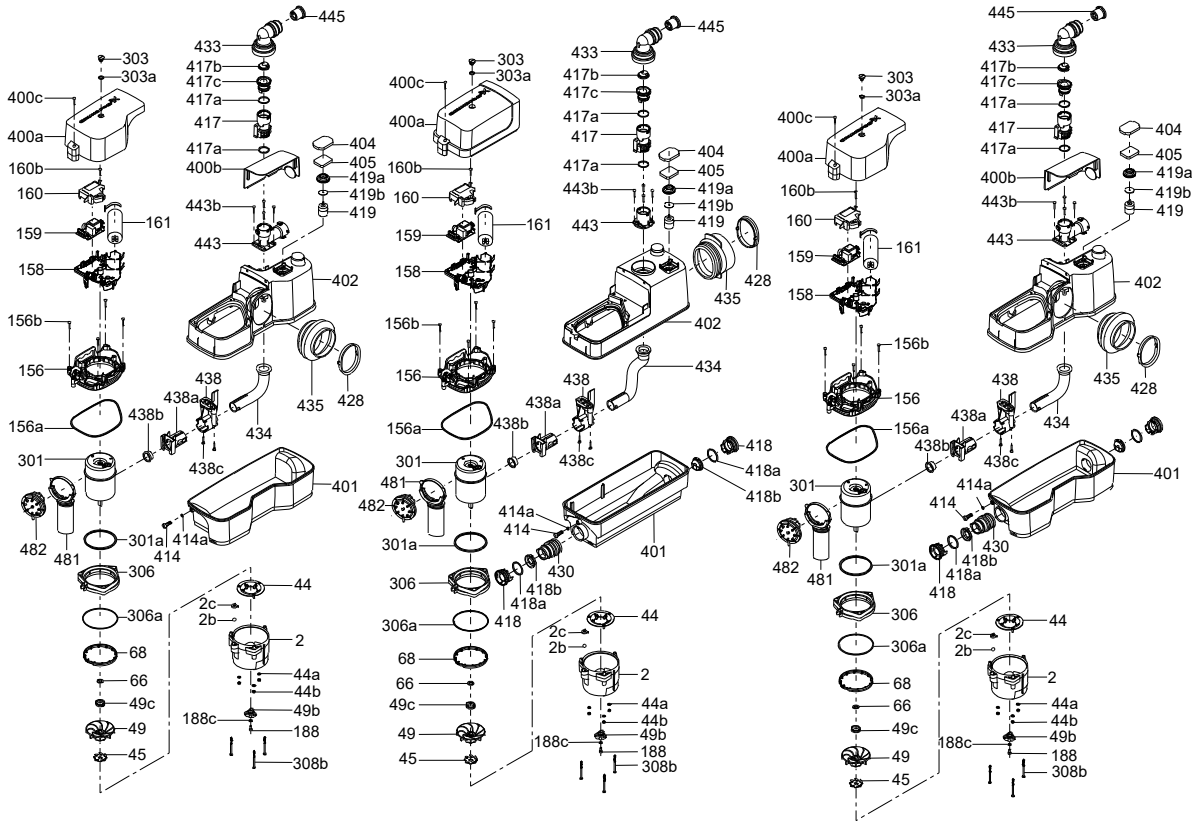
303
303a
400c
400a
160b
160
159
158
156b
156
156a
301
482
481
301a
306
306a
68
66
49c
49
45
161
438b
438a
438c
414
414a
401
44
2c
2b
2
44a
44b
49b
188c
188
308b
445
433
417b
417c
417a
417
400b
404
405
419a
419b
419
443b
443
402
438
434
435
428
418
418a
418b
430

TM050301

C-3, D-2

Cover, Service

Pos.	Description	C-3	D-2
	Kit No	97775357	97775358
400a	Cover	1	1
400c	Screw	1	1

Capacitor

Pos.	Description/kit No	97775375
161	Capacitor	1

Carbon filter

Pos.	Description	D-2 & C-3
	Kit No	97775370
404	Filter cover	1
405	Carbon filter	5

Discharge connector

Pos.	Description/	C-3
	Kit No	98103364
443	Discharge connector	1

Float switch unit

Pos.	Description	C-3
	Kit No	97775346
460	Pressure switch unit	1

Impeller

Pos.	Description	C-3	D-2
	Kit No	97775352	97775354
49	Impeller	1	1

Inlet adapter with flap for horizontal inlets

Pos.	Description	C-3
	Kit No	97775378
418	Inlet adapter	1
418a	O-ring	1
418b	Non-return flap valve	1

Motor with float switch

Pos.	Description	C-3	D-2	C-3	D-2
	Kit No	97775342	97775343	97775351	97775353
2	Pump housing	1	1	-	-
49	Impeller	1	1	-	-
49c	V-ring	1	-	-	-
67	Nut	1	1	-	-
67a	Cap	1	1	-	-
156	Motor flange	1	1	-	-
156a	O-ring	1	1	-	-
156b	Screw	1	1	-	-
161	Capacitor	1	1	-	-
301	Motor	1	1	1	1
301a	O-ring	1	1	1	1
306	Flange for pump housing	1	-	-	-
306 a	O-ring	1	-	-	-
308b	Screw	3	3	-	-
460	Float switch unit	1	-	-	-
482	Pressure switch	-	1	-	-

Non-return valve for outlet

Pos.	Description/kit No	97775371
417c	Non-return valve body	1
417a	O-ring	2
417b	Non-return flap	1

Pressure switch unit

Pos.	Description	D-2
	Kit No	97775347
482	**Pressure switch unit**	**1**
482a	O-ring	1

Rubber parts for inlet

Pos.	Description	C-3
	Kit No	97775364
430	Flexible connection	2
-	Clamp	4

Rubber parts for outlet

Pos.	Description	C-3	D-2
	Kit No	97775366	97775367
433	Elbow	1	1
-	Clamp	2	2
445	Reducer	1	-

Supply cable

Pos.	Description	Schuko	Australia
	Kit No	97821591	97901608
-	Supply cable	1	1

Tank

Pos.	Description	C-3	D-2
	Kit No	***97775361***	***97775362***
400b	Pipe cover	1	-
401	Tank bottom	1	1
402	Tank top	1	1
404	Filter cover	1	1
405	Carbon filter	1	1
414	Drain plug	1	1
414a	O-ring	1	1
418	Inlet adapter	2	-
418a	O-ring	2	-
418b	Non-return flap valve	2	-
419	Air vent valve	1	1
419a	Gasket	1	1
419b	Rubber washer	1	1
434	Discharge pipe	1	1
434a	O-ring	-	1
438	Fixing device	1	-
438a	Adapter	1	-
438b	Retaining ring	1	-
438c	Screw	-	1
443	Discharge connector	1	-
443b	Screw	4	-
532	Blanking plug	1	-
532a	O-ring	1	-
532b	Screw	1	-

C-3

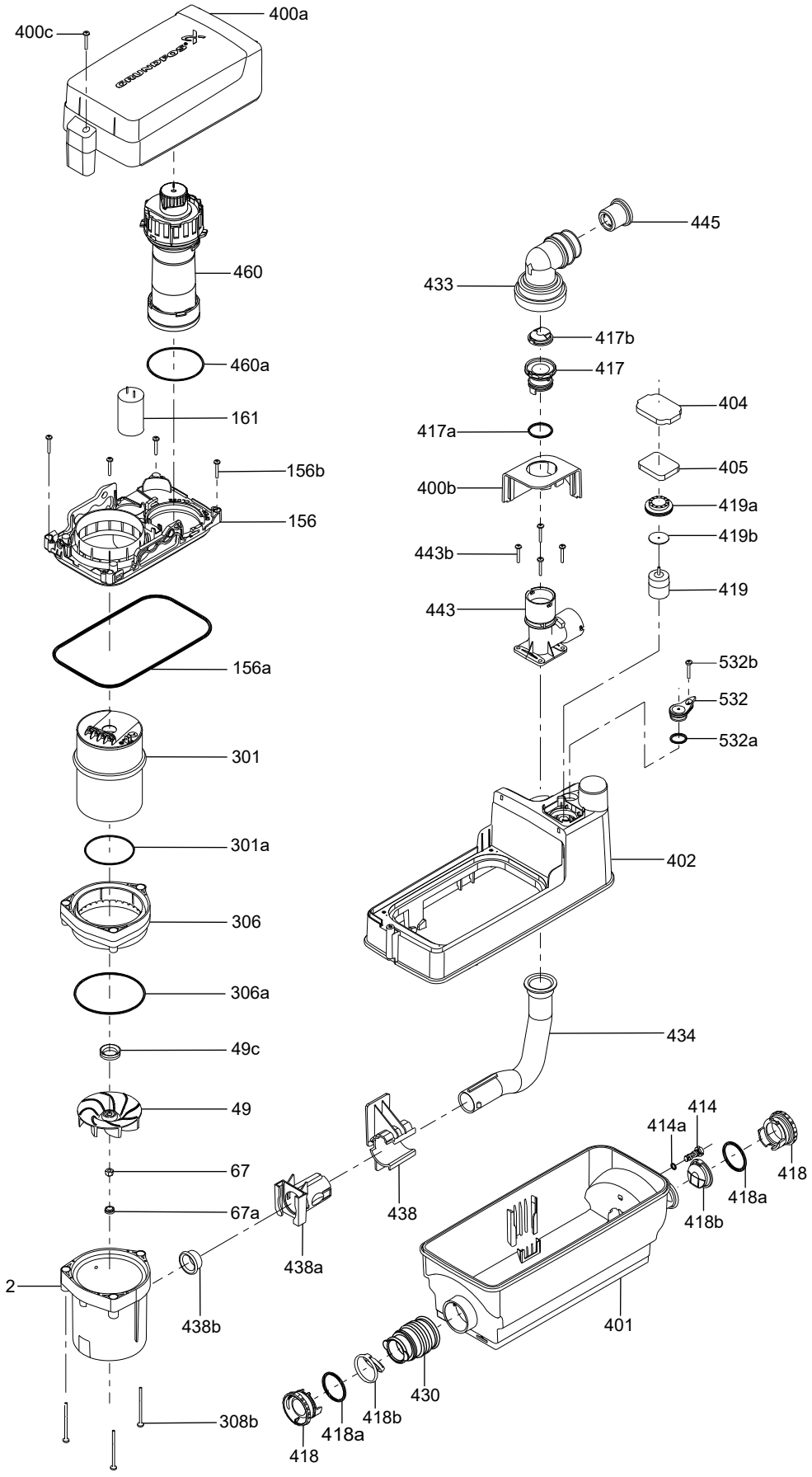
400a
400c
460
460a
161
156b
156
156a
301
301a
306
306a
49c
49
67
67a
2
438b
438a
438
434
445
433
417b
417
417a
400b
443b
443
404
405
419a
419b
419
532b
532
532a
402
401
414
414a
418a
418b
418
430
418b
418a
418
308b
TM050001

D-2

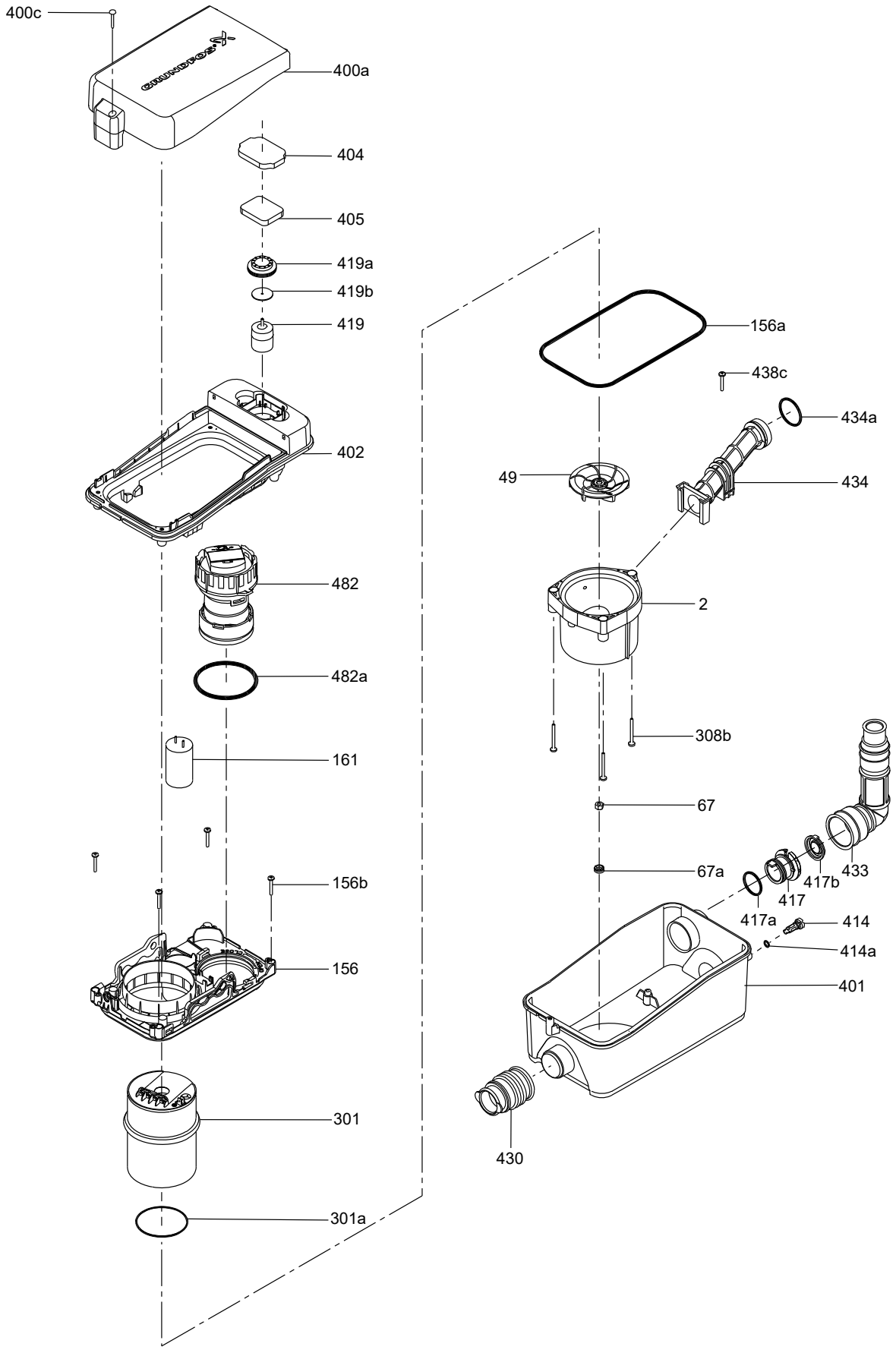
400c
400a
404
405
419a
419b
419
402
482
482a
161
156b
156
301
301a
156a
438c
434a
49
434
2
308b
67
67a
433
417b
417
417a
414
414a
401
430
TM050005

82. SP

SP 1A, 2A model A

50/60 Hz, Cone and nut type

Wear parts

Pos.	Kit No	*105059*	*095059*	*095060*	*095061*	*095062*
	Number of stages	**31-39**	**40-48**	**49-60**	**61-75**	**76-90**
	Description					
6	Top bearing	1	1	1	1	1
7	Neck ring	39	48	60	75	90
85	Stop ring	3	3	3	3	3

SP 1A, 2A model A

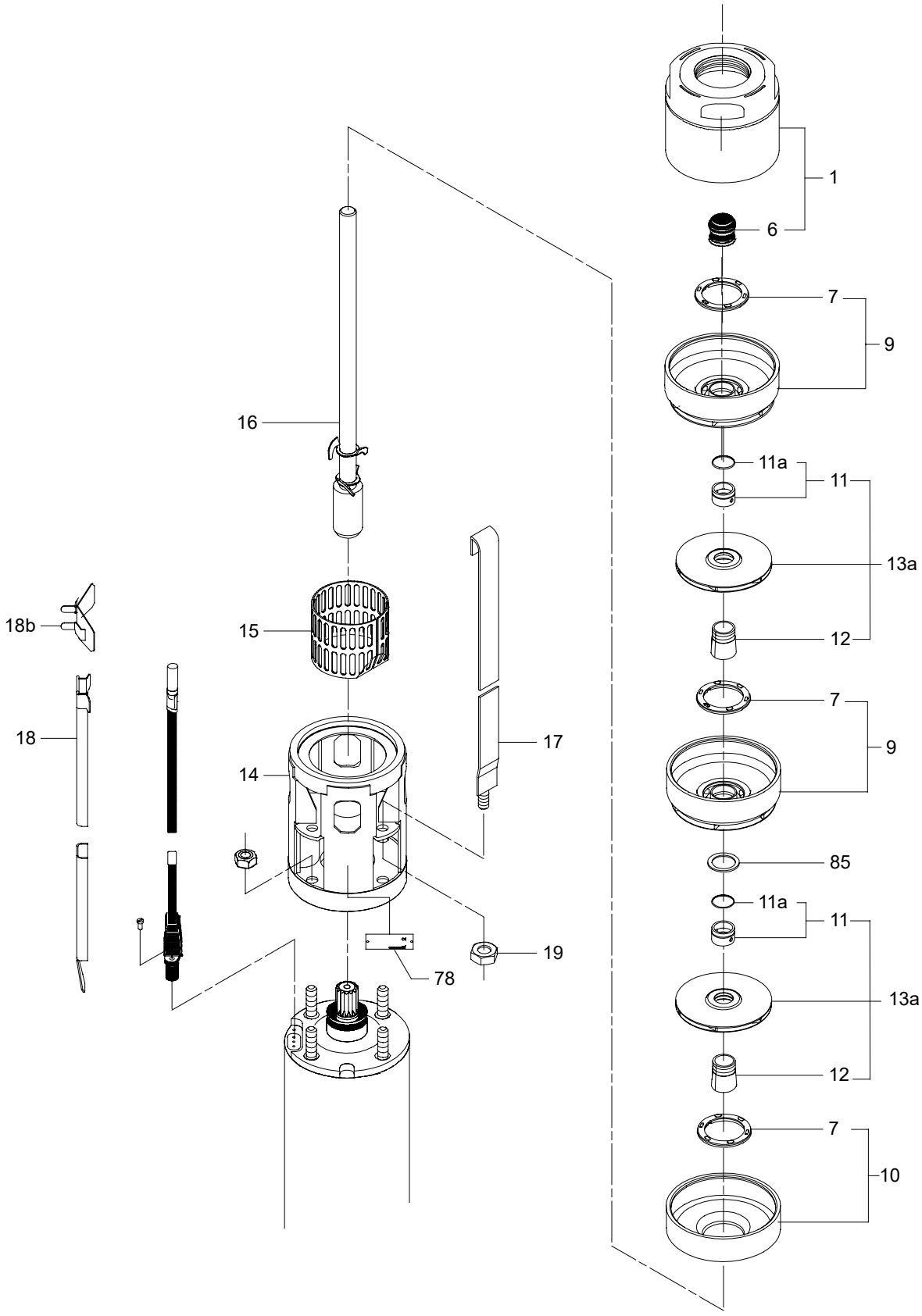

SP 1A, 1.5A, 2A model A

50/60 Hz, Splined shaft

Wear parts

Pos.	Kit No	*095054*	*055008*	*055009*	*095056*	*055010*	*055011*
	Number of stages	**-6**	**7-9**	**10-15**	**16-21**	**22-26**	**27-33**
	Description						
3	Valve seat	1	1	1	1	1	1
6	Top bearing	1	1	1	1	1	1
7	Neck ring	6	9	15	21	26	33
8	Bearing	6	9	15	21	26	33
19b	Lock nut, M8	1	1	1	1	1	1
	Lock nut, 5/16” UNF	1	1	1	1	1	1
70	Valve guide	1	1	1	1	1	1
76	Washer	1	1	1	1	1	1

SP 1A, 1.5A, 2A model A

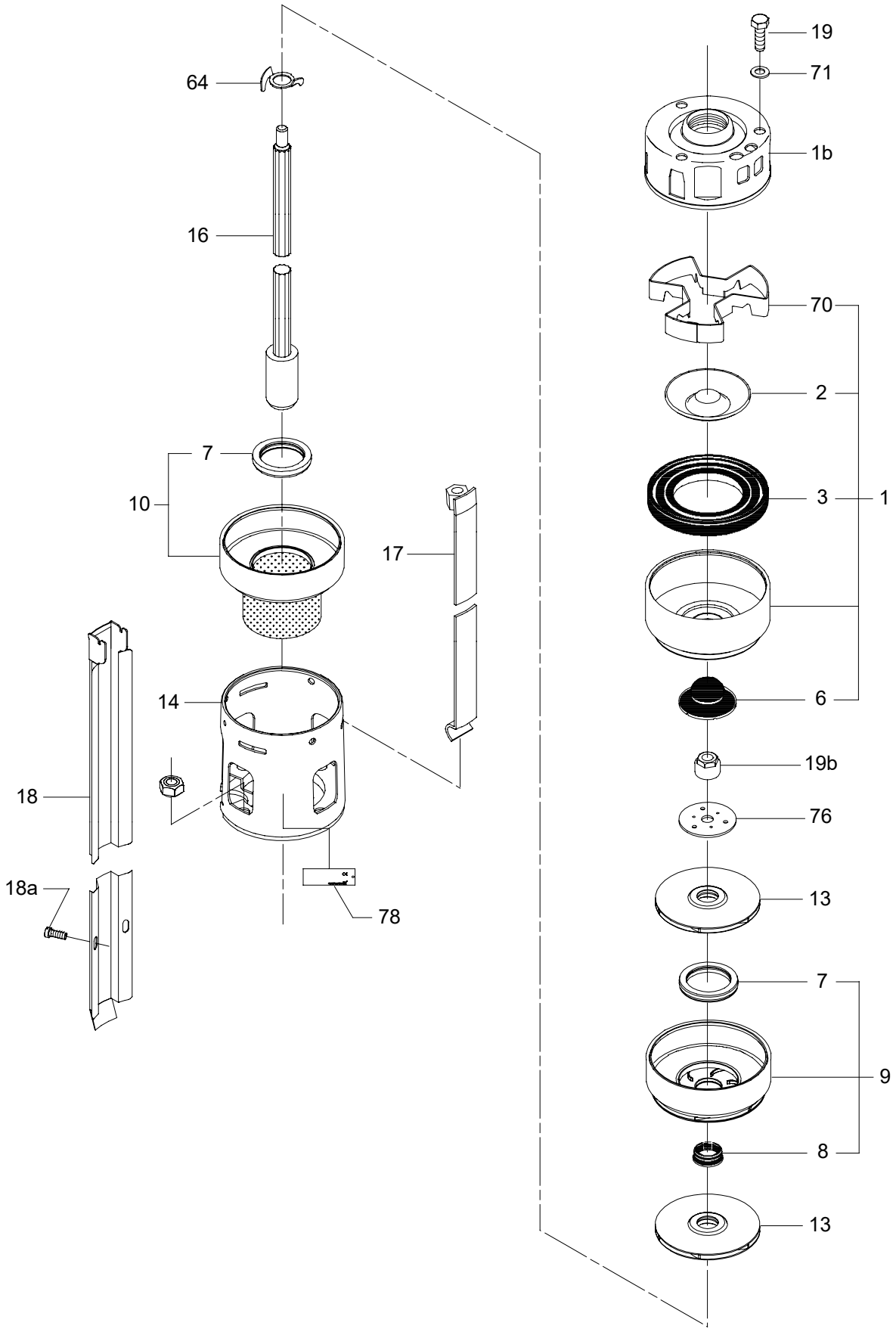

SP 3A, 5A model A

50/60 Hz, Splined shaft

Wear parts

Pos.	Kit No	095054	055008	055009	095056	055010	055011
	Number of stages	1-6	7-9	10-15	16-21	22-26	27-33
	Description						
3	Valve seat	1	1	1	1	1	1
6	Top bearing	1	1	1	1	1	1
7	Neck ring	6	9	15	21	26	33
8	Bearing	6	9	15	21	26	33
19b	Lock nut	1	1	1	1	1	1
70	Valve guide	1	1	1	1	1	1
76	Washer	1	1	1	1	1	1

SP 3A, 5A model A

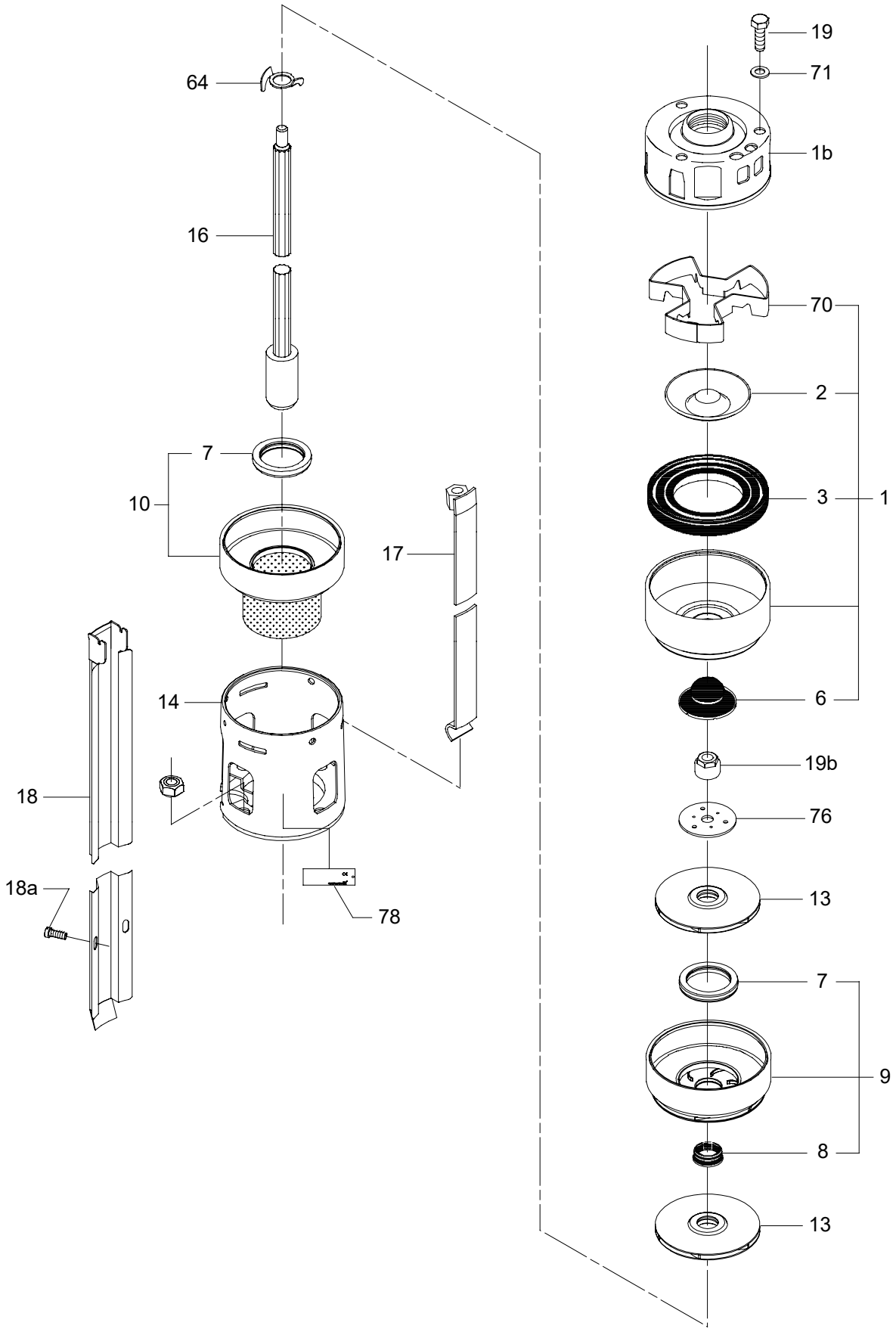

Cone and nut type

Wear parts

SP 3A (N), SP 5A (N)

Pos.	Kit No	105543	105544	055504	105546	105547	105059	095059	095060	095061	095062
	Number of stages	**-5**	**6-10**	**11-15**	**16-24**	**25-30**	**31-39**	**40-48**	**49-60**	**61-75**	**76-90**
	Description										
3	Valve seat	1	1	1	1	1	-	-	-	-	-
6	Top bearing	1	1	1	1	1	1	1	1	1	1
7	Neck ring	5	10	15	24	30	39	48	60	75	90
85	Stop ring	1	2	3	3	3	3	3	3	3	3

SP 3A NE, SP 5A NE

Pos.	Kit No	96440231	96440230	96440229	96440228	96440227
	Number of stages	**-12**	**-25**	**-33**	**-45**	**-60**
	Description					
6	Top bearing	1	1	1	1	1
7	Neck ring	12	25	33	45	60
85	Stop ring	2	3	3	3	3

SP 3A R, SP 5A R

Pos.	Kit No	105969	105970	105971	105972	105973	105974	105975	105976
	Number of stages	**-5**	**6-10**	**11-15**	**16-24**	**25-30**	**31-39**	**40-48**	**49-60**
	Description								
6	Top bearing	1	1	1	1	1	1	1	1
7	Neck ring	5	10	15	24	30	39	48	60
85	Stop ring	1	2	2	3	3	3	3	3

SP 3A, 5A model A

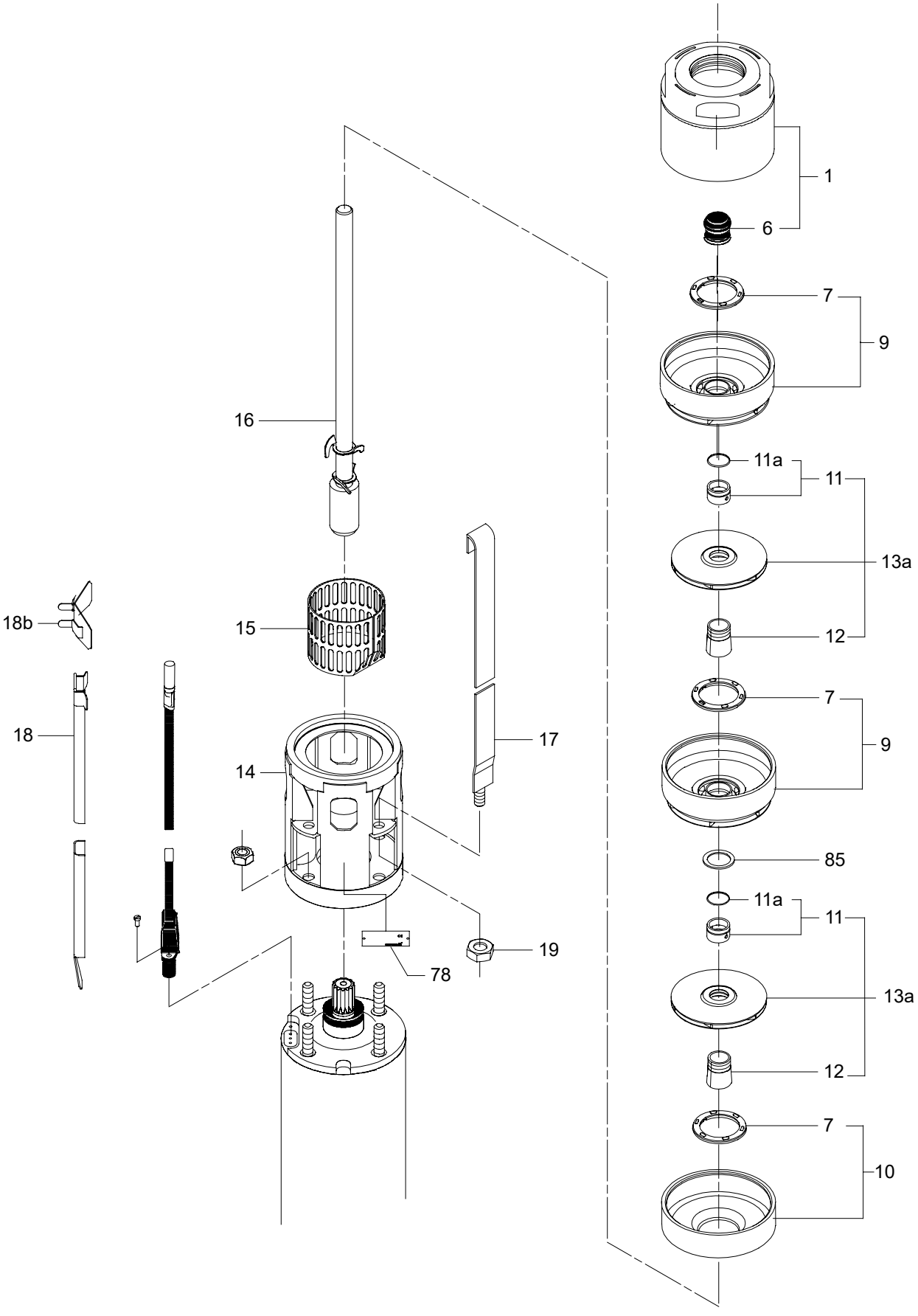

SP 8A (N) (NE) (R) model A

Wear parts

SP 8A, SP 8A R

Pos.		SP 8A before yyww 9444				SP 8A and SP 8A R after yyww 9444			
	Kit No	*115046*	*115047*	*115048*	*115103*	*96428935*	*96428936*	*96428937*	*96428938*
	Number of stages	**5-10**	**12-18**	**21-25**	**28-37**	**5-10**	**12-18**	**21-25**	**28-37**
	Description								
3	Valve seat	1	1	1	1	-	-	-	-
6	Top bearing	1	1	1	1	1	1	1	1
7	Neck ring	10	18	25	37	10	18	25	37
8	Bearing	9	17	24	36	9	17	24	36

SP 8A N

Pos.		Before yyww 9444			SP 8A N after yyww 9444		
	Kit No	*115587*	*115588*	*115589*	*96428935*	*96428936*	*96428937*
	Number of stages	**5-10**	**12-18**	**21-25**	**5-10**	**12-18**	**21-25**
	Description						
3	Valve seat	1	1	1	-	-	-
6	Top bearing	1	1	1	1	1	1
7	Neck ring	10	18	25	10	18	25
8	Bearing	9	17	24	9	17	24

SP 8A NE

Pos.		Before yyww 9444			After yyww 9444			
	Kit No	*115567*	*115568*	*115569*	*96428939*	*96428940*	*96428941*	*96441561*
	Number of stages	**5-10**	**12-18**	**21-25**	**5-10**	**12-18**	**21-25**	**26-37**
	Description							
3	Valve seat	-	1	1	-	-	-	1
6	Top bearing	1	1	1	1	1	1	1
7	Neck ring	10	18	25	10	18	25	37
85	Stop ring	9	17	24	9	17	24	36

SP 8A (N) (NE) (R) model A

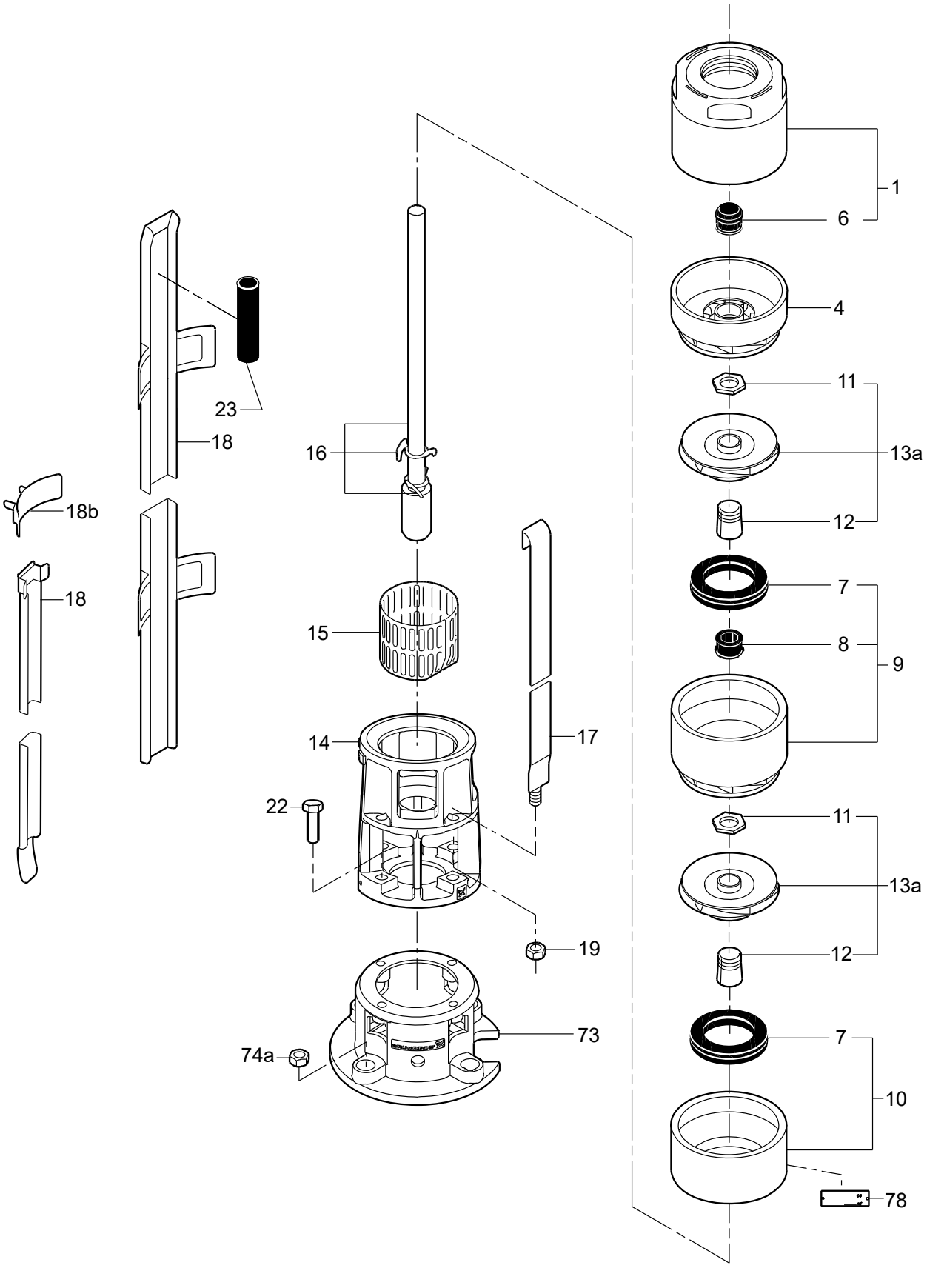

SP 11A, 14A model A

Wear parts

SP 11A, SP 14A

Pos.	Kit No	075008	075009	075010	075011
	Number of stages	-5	7-13	14-18	20-25
	Description				
3	Valve seat	1	1	1	1
6	Top bearing	1	1	1	1
7	Neck ring	5	13	18	25
8	Bearing	5	13	18	25
11	Split cone nut	5	13	18	25
12	Split cone	5	13	18	25
85	Stop ring	1	1	1	1

SP 14A N

Pos.	Kit No	075507	075508	075509	075510
	Number of stages	-5	7-13	14-18	20-25
	Description				
7	Neck ring	5	13	18	25
8	Bearing	5	13	18	25
11	Split cone nut	5	13	18	25
12	Split cone	5	13	18	25
85	Stop ring	1	1	1	1

SP 11A, 14A model A

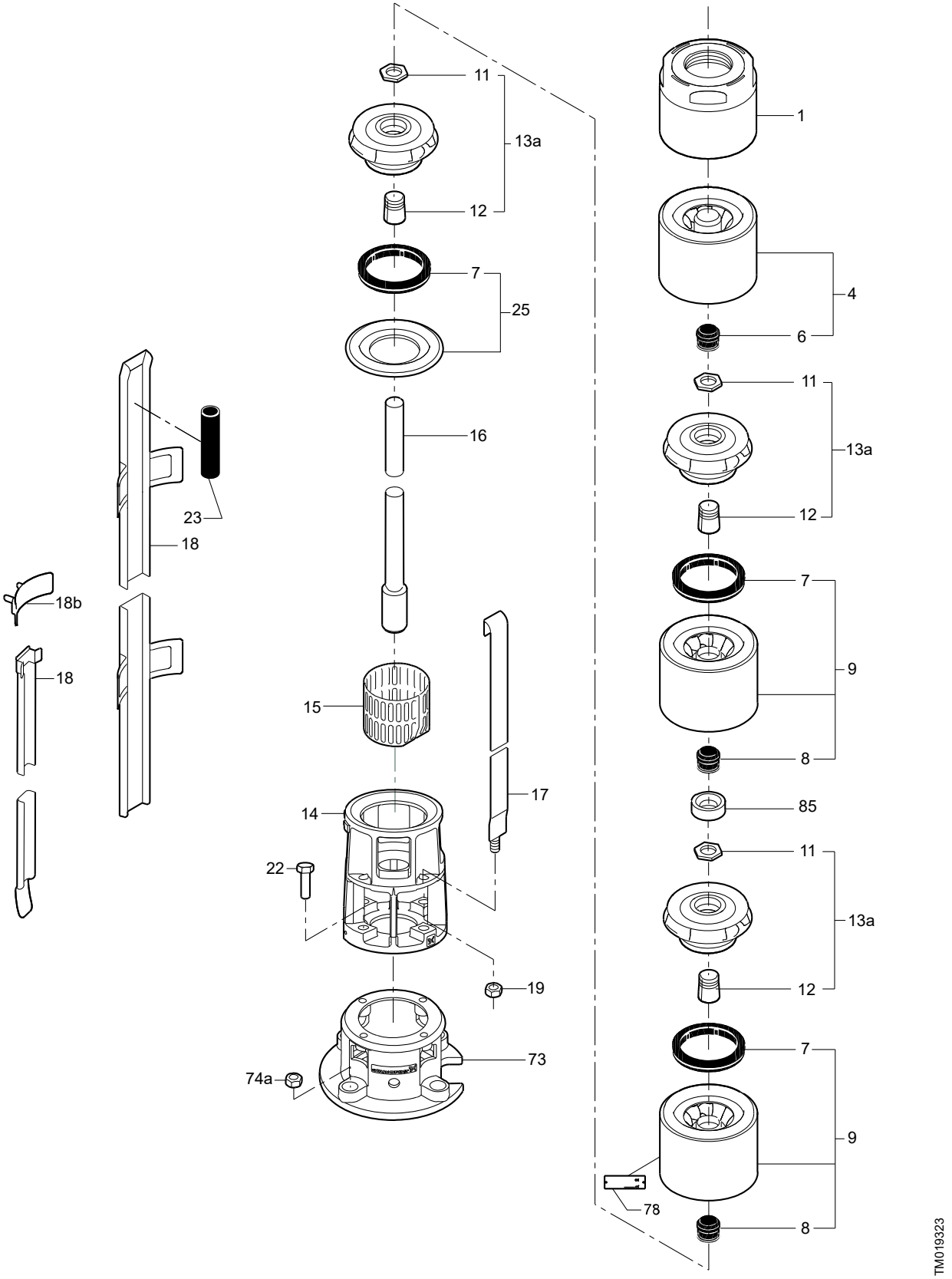

SP 7, 9, 11, 14

Wear parts

SP 7, 9 NBR

Pos.	Kit No	98766923	98766924	98766929	98766930	98766935	98766936	98766941	98766942	98766947
	Number of stages	**1**		**2-5**		**6-10**		**11-25**		**26-50**
	Description									
3a	Valve seat	1	1	1	1	1	1	1	1	1
8	Bearing shaft ∅12,5	1	-	5	-	10	-	25	-	50
8	Bearing shaft ∅ 16	-	1	-	5	-	10	-	25	50
7 / 68	Seal ring	2	2	6	6	10	10	25	25	50

SP 7, 9 FKM

Pos.	Kit No.	98766925	98766926	98766931	98766932	98766937	98766938	98766943	98766944	98766948
	Number of Stages	**1**		**2-5**		**6-10**		**11-25**		**26-50**
	Description									
3a	Valve seat	1	1	1	1	1	1	1	1	1
8	Bearing shaft ∅12,5	1	-	5	-	10	-	25	-	50
8	Bearing shaft ∅16	-	1	-	5	-	10	-	25	50
7 / 68	Seal ring	2	2	6	6	11	11	26	26	51

SP 11, 14 NBR

Pos.	Kit No.	98766927	98766933	98766939	98766945
	Number of Stages	**1**	**5**	**10**	**25**
	Description				
3a	Valve seat	1	1	1	1
8	Bearing shaft Ø 16	1	5	10	25
7 / 68	Seal ring	2	2	6	6

SP 11, 14 FKM

Pos.	Kit No.	98766928	98766934	98766940	98766946
	Number of Stages	**1**	**5**	**10**	**25**
	Description				
3a	Valve seat	1	1	1	1
8	Bearing shaft ∅16	1	5	10	25
7 / 68	Seal ring	2	6	11	26

SP 7, 9, 11, 14

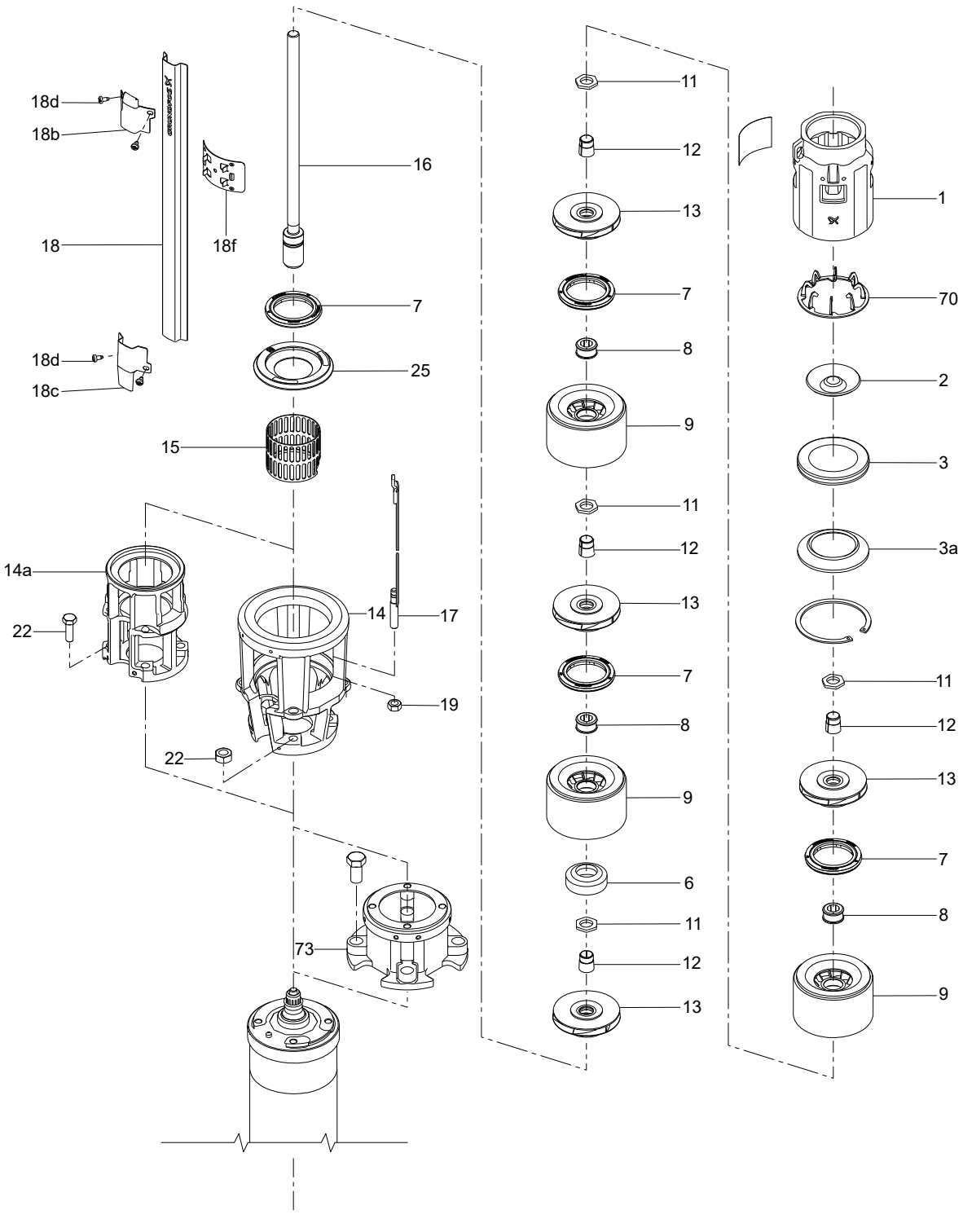
18d
18b
18
18f
18d
18c
16
7
25
15
14a
22
14
17
19
22
73
11
12
13
7
8
9
11
12
13
7
8
9
6
11
12
13
1
70
2
3
3a
11
12
13
7
8
9
TM061865

SP 17 model A

Wear parts

SP 17, SP 17 N, SP 17 R

Pos.	Kit No	96421723	96421724	96421725	96440238	96488045	96488046
	Number of stages	1-5	6-16	17-26	27-40	-50	-60
	Description						
3	Valve seat	1	1	1	-	-	-
6	Bearing	1	1	1	-	-	-
7	Neck ring	5	16	26	40	50	60
8	Bearing	4	15	25	39	49	59
8a	Spacing washer	1	1	1	1	1	1
72	Wear ring	5	16	26	40	50	60

Impeller

Pos.	Pump type	SP 17	SP 17 N	SP 17 R
	Kit No	97506595	96903203	96903204
	Description			
11, 12, 13, 72	Impeller with split cone and nut	1	1	1

Split cone with nut

Pos.	Pump type	SP 17	SP 17 N	SP 17 R
	Kit No	97508279	96901911	96901953
	Description			
11	Split cone nut	1	1	1
12	Split cone	1	1	1

Split cone with stop nut

Pos.	Pump type	SP 17	SP 17 N	SP 17 R
	Kit No	97508314	96901960	96901961
	Description			
11	Split cone nut	1	1	1
12	Split cone	1	1	1
-	Spacing washer for stop ring	1	1	1

Cable termination (shrink-flex)

See the SP data booklet.

SP 17 model A

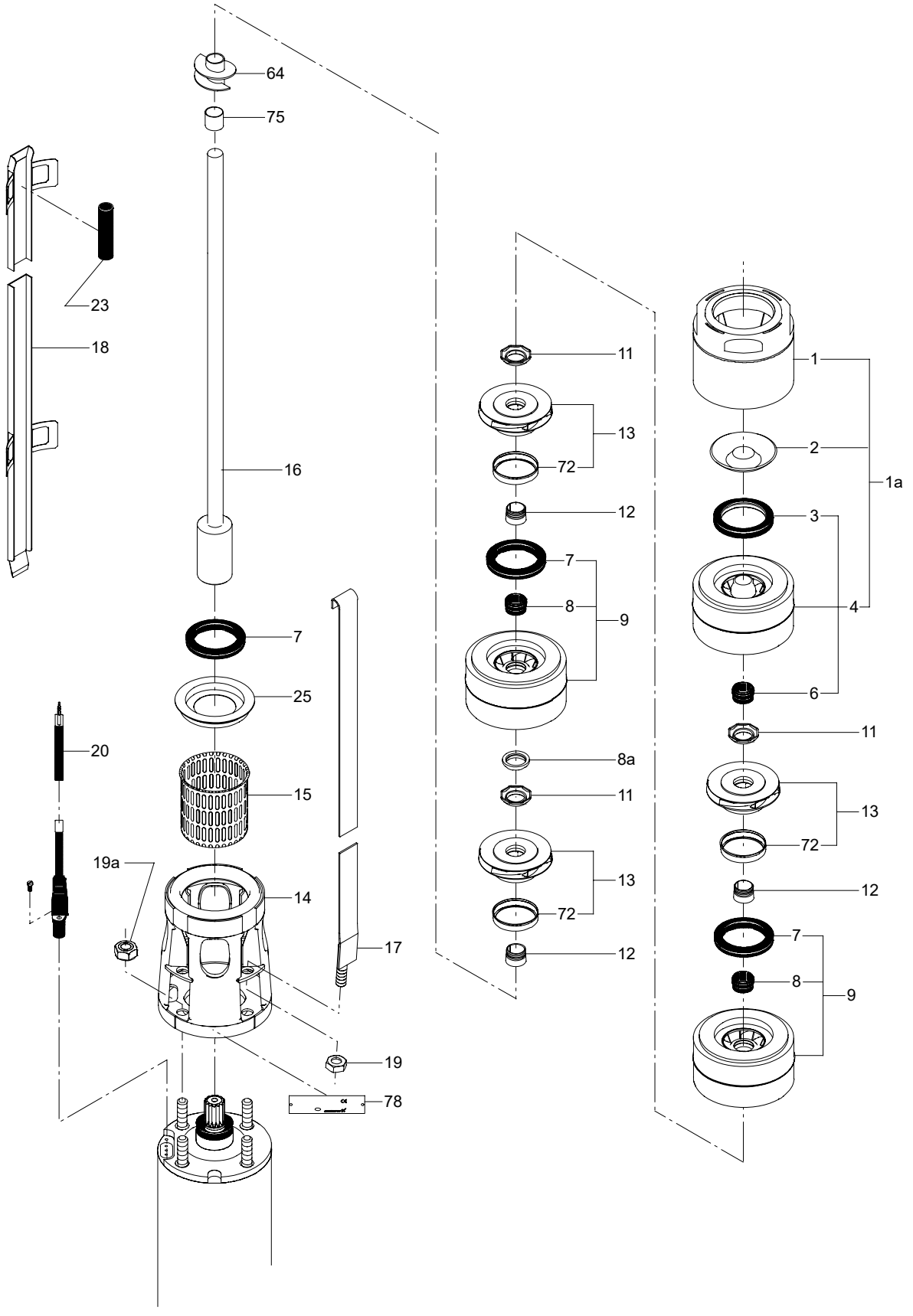
64
75
23
18
16
7
25
20
15
19a
14
17
19
78
11
13
72
12
7
8
9
8a
11
13
72
12
1
2
1a
3
4
6
11
13
72
12
7
8
9
TM012257

SP 17 model B

Wear parts, NBR
SP 17, SP 17 N, SP 17 R

Pos.	Kit No	97945520	97945521	97937872	97937873	97937874	97937875	97937876
	Number of stages	1-5	6-12	13-19	20-30	31-40	41-50	51-60
	Description							
3	Valve seat	1	1	1	1	1	1	1
7	Neck ring	5	12	19	30	40	50	60
8	Bearing	5	12	19	30	40	50	60
8a	Spacing washer	1	1	1	1	1	1	1
37	O-ring	-	-	-	1	1	1	1
72	Wear ring	5	12	19	30	40	50	60
142a	Bearing for valve cup	1	1	1	1	1	1	1

Wear parts, FKM
SP 17, SP 17 N, SP 17 R

Pos.	Kit No	97937891	97937892	97937893	97937894	97937895	97937896	97937897
	Number of stages	1-5	6-12	13-19	20-30	31-40	41-50	51-60
	Description							
3	Valve seat	1	1	1	1	1	1	1
7	Neck ring	5	12	19	30	40	50	60
8	Bearing	5	12	19	30	40	50	60
8a	Spacing washer	1	1	1	1	1	1	1
37	O-ring	-	-	-	1	1	1	1
72	Wear ring	5	12	19	30	40	50	60
142a	Bearing for valve cup	1	1	1	1	1	1	1

Wear parts, Wear resistant bearing
SP 17, SP 17 N, SP 17 R

Pos.	Kit No	98098277	98098278	98098279	98098280	98098311	98098312	98098313
	Number of stages	1-5	6-12	13-19	20-30	31-40	41-50	51-60
	Description							
3	Valve seat	1	1	1	1	1	1	1
7	Neck ring	5	12	19	30	40	50	60
8	Bearing	5	12	19	30	40	50	60
8a	Spacing washer	1	1	1	1	1	1	1
37	O-ring	-	-	-	1	1	1	1
72	Wear ring	5	12	19	30	40	50	60
142a	Bearing for valve cup	1	1	1	1	1	1	1

Cable termination (shrink-flex)

See the SP data booklet.

SP 17 model B

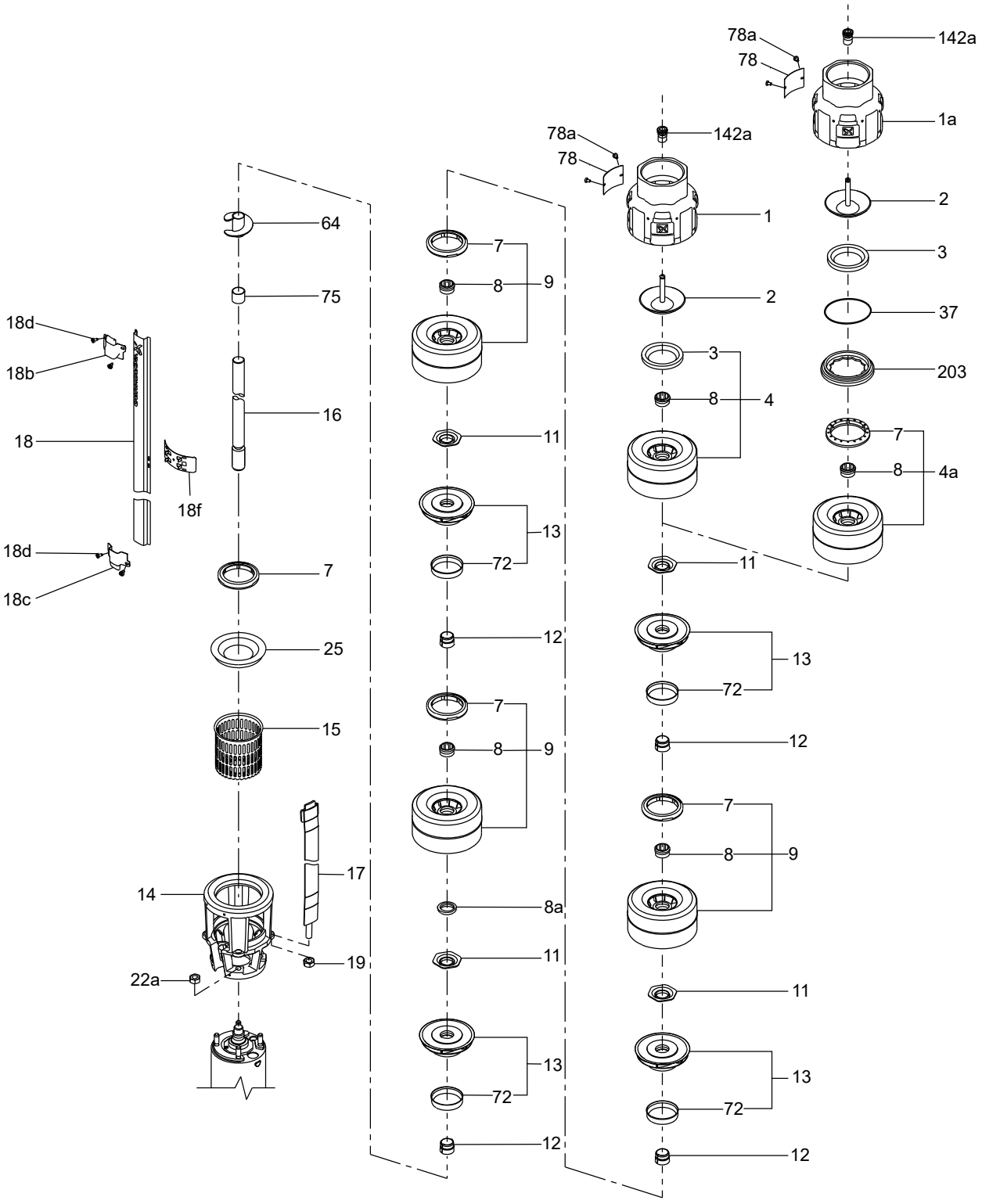
78a
78
142a
1a
78a
78
142a
1
2
3
37
203
7
8
4a
64
75
16
18d
18b
18
18f
18d
18c
7
25
15
17
14
19
22a
7
8
9
11
13
72
12
7
8
9
8a
11
13
72
12
2
3
8
4
11
13
72
12
7
8
9
11
13
72
12
TM055375

SP 30 model A

Wear parts
SP 30, SP 30 N, SP 30 R

Pos.	Pump type	SP 30, SP 30 N, SP 30 R				
	Kit No	*96421732*	*96421733*	*96421734*	*96440246*	*96488047*
	Number of stages	**1-5**	**6-16**	**17-27**	**28-39**	**40-54**
	Description					
3	Valve seat	1	1	1	1	-
6	Top bearing	1	1	1	1	1
6b	Lower bearing	1	1	1	1	1
7	Neck ring	5	16	27	39	54
8	Bearing	3	14	25	37	52
8a	Spacing washer	1	1	1	1	1
8b	Stop ring	1	1	1	1	1
25	Neck ring retainer	1	1	1	1	1
72	Wear ring	5	16	27	39	54

Impeller

Pos.	Pump type	SP 30	SP 30 N	SP 30 R
	Kit No	*97506691*	*96903205*	*96903206*
	Description			
11, 12, 13, 72	Impeller with split cone and nut	1	1	1

Split cone with nut

Pos.	Pump type	SP 30	SP 30 N	SP 30 R
	Kit No	*97509658*	*96901972*	*96901973*
	Description			
11	Split cone nut	1	1	1
12	Split cone	1	1	1

Split cone with stop nut

Pos.	Pump type	SP 30	SP 30 N	SP 30 R
	Kit No	*97509673*	*96901980*	*96901981*
	Description			
11	Split cone nut	1	1	1
12	Split cone	1	1	1
-	Spacing washer for stop ring	1	1	1

Cable termination (shrink-flex)

See the SP data booklet.

SP 30 model A

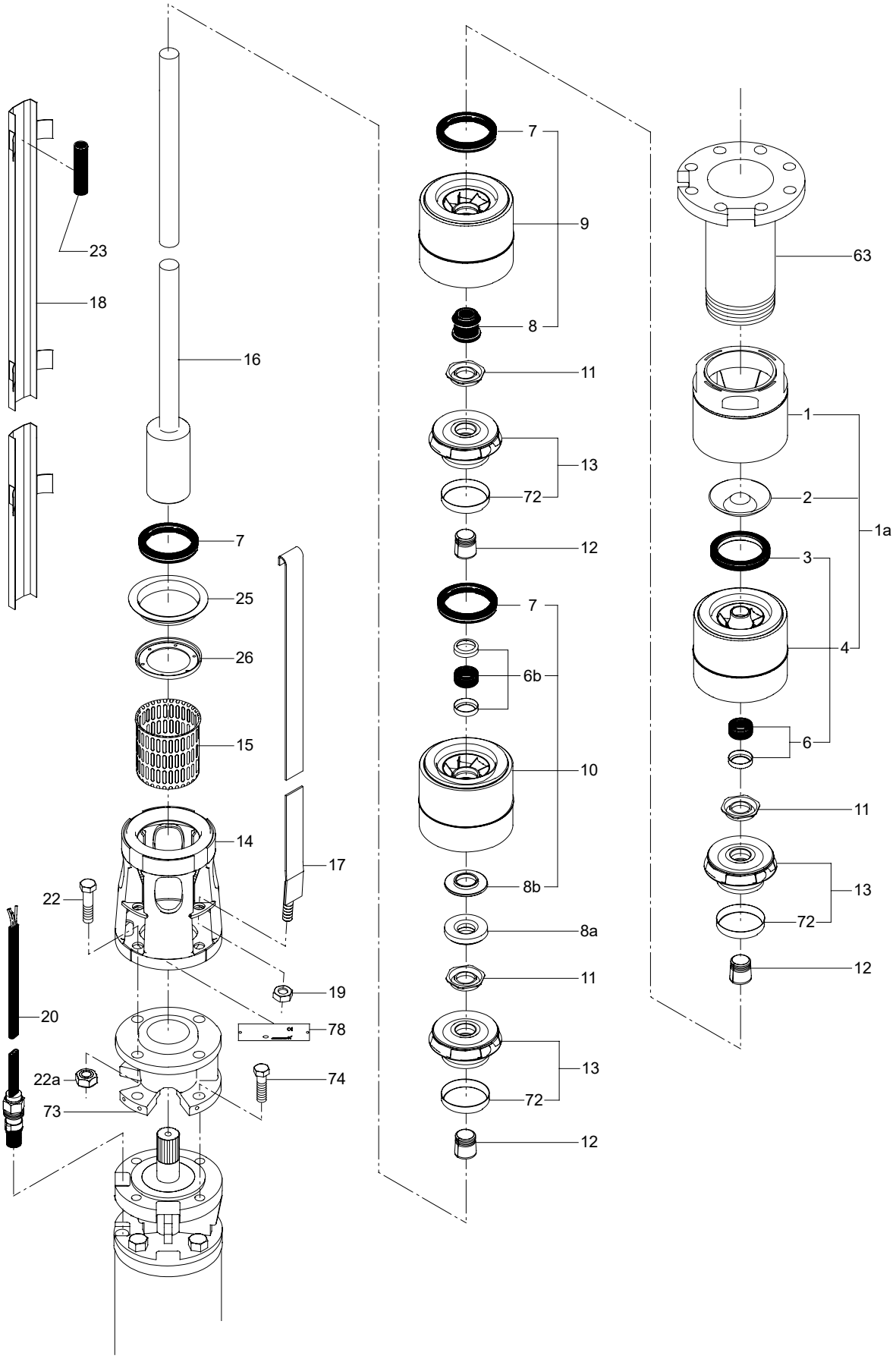
23
18
16
7
25
26
15
14
17
22
19
20
78
22a
74
73
7
9
8
11
13
72
12
7
6b
10
8b
8a
11
13
72
12
63
1
2
1a
3
4
6
11
13
72
12
TM012259

SP 30 model B

Wear parts, NBR

SP30, SP 30 N, SP 30 R

Pos.	Kit No	97945522	97937877	97937878	97937879	97937880
	Number of stages	1-5	6-15	16-27	28-39	40-54
	Description					
3	Valve seat	1	1	1	1	1
6b	Bottom bearing	1	1	1	1	1
6b	Bearing cup	2	2	2	2	2
7	Neck ring	5	15	27	39	54
8	Bearing	4	14	26	38	53
8a	Spacing washer	1	1	1	1	1
8b	Stop ring	1	1	1	1	1
25	Retainer for neck ring	1	1	1	1	1
37	O-ring	-	-	1	1	1
72	Wear ring	5	15	27	39	54
142a	Bearing for valve cup	1	1	1	1	1

Wear parts, FKM

SP30, SP 30 N, SP 30 R

Pos.	Kit No	97937898	97937899	97937900	97937901	97937902
	Number of stages	1-5	6-15	16-27	28-39	40-54
	Description					
3	Valve seat	1	1	1	1	1
6b	Bottom bearing	1	1	1	1	1
6b	Bearing cup	2	2	2	2	2
7	Neck ring	5	15	27	39	54
8	Bearing	4	14	26	38	53
8a	Spacing washer	1	1	1	1	1
8b	Stop ring	1	1	1	1	1
25	Retainer for neck ring	1	1	1	1	1
37	O-ring	-	-	1	1	1
72	Wear ring	5	15	27	39	54
142a	Bearing for valve cup	1	1	1	1	1

Wear parts, Wear resistant bearing

SP30, SP 30 N, SP 30 R

Pos.	Kit No	98098314	98098315	98098316	98098317	98098318
	Number of stages	1-5	6-15	16-27	28-39	40-54
	Description					
3	Valve seat	1	1	1	1	1
6b	Bottom bearing	1	1	1	1	1
6b	Bearing cup	2	2	2	2	2
7	Neck ring	5	15	27	39	54
8	Bearing	4	14	26	38	53
8a	Spacing washer	1	1	1	1	1
8b	Stop ring	1	1	1	1	1
25	Retainer for neck ring	1	1	1	1	1
37	O-ring	-	-	1	1	1
72	Wear ring	5	15	27	39	54
142a	Bearing for valve cup	1	1	1	1	1

Cable termination (shrink-flex)

See the SP data booklet.

SP 30 model B

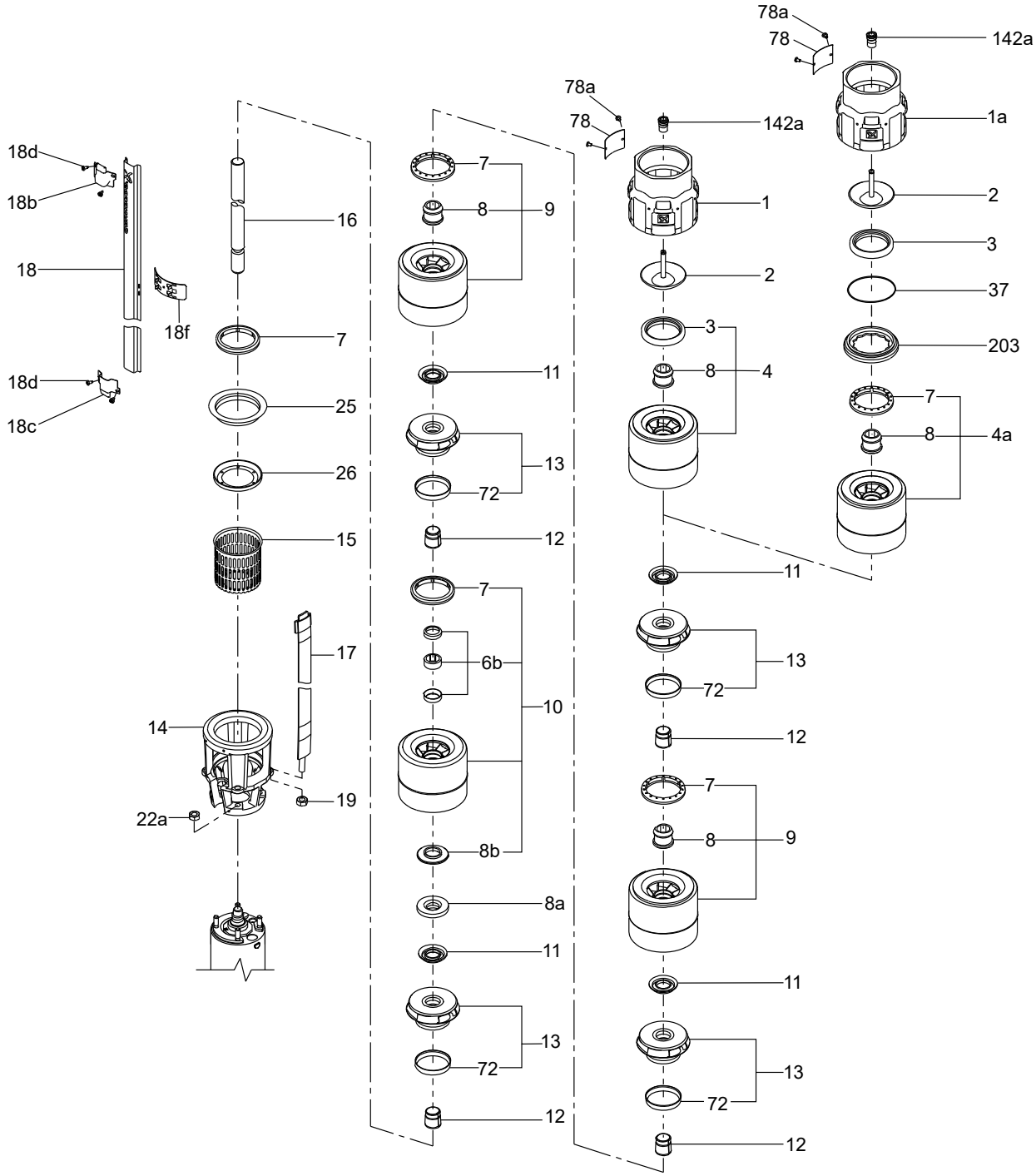
78a
78
142a
1a
2
3
37
203
7
8
4a
78a
78
142a
1
2
3
8
4
11
13
72
12
7
8
9
11
13
72
12
7
8
9
11
13
72
12
18d
18b
18
18f
18d
18c
16
7
25
26
15
17
14
19
22a
7
8
9
11
13
72
12
7
6b
10
8b
8a
11
13
72
12
TM055374

SP 46 model A

Wear parts

SP 46, SP 46 N, SP 46 R

Pos.	Kit No	96440248	96440250	96440252	96440254	96488048
	Number of stages	1-6	7-10	11-16	17-24	25-37
	Description					
3	Valve seat	1	1	1	1	-
6	Top bearing	1	1	1	1	1
6b	Lower bearing	1	1	1	1	1
7	Neck ring	5	9	15	23	35
8	Bearing	4	8	14	22	35
8a	Spacing washer	1	1	1	1	1
8b	Stop ring	1	1	1	1	1
11c	Nut for stop ring	1	1	1	1	1
68	Bottom neck ring	1	1	1	1	1
72	Wear ring	6	10	16	24	37

Cable termination (shrink-flex)

See the SP data booklet.

SP 46 model A

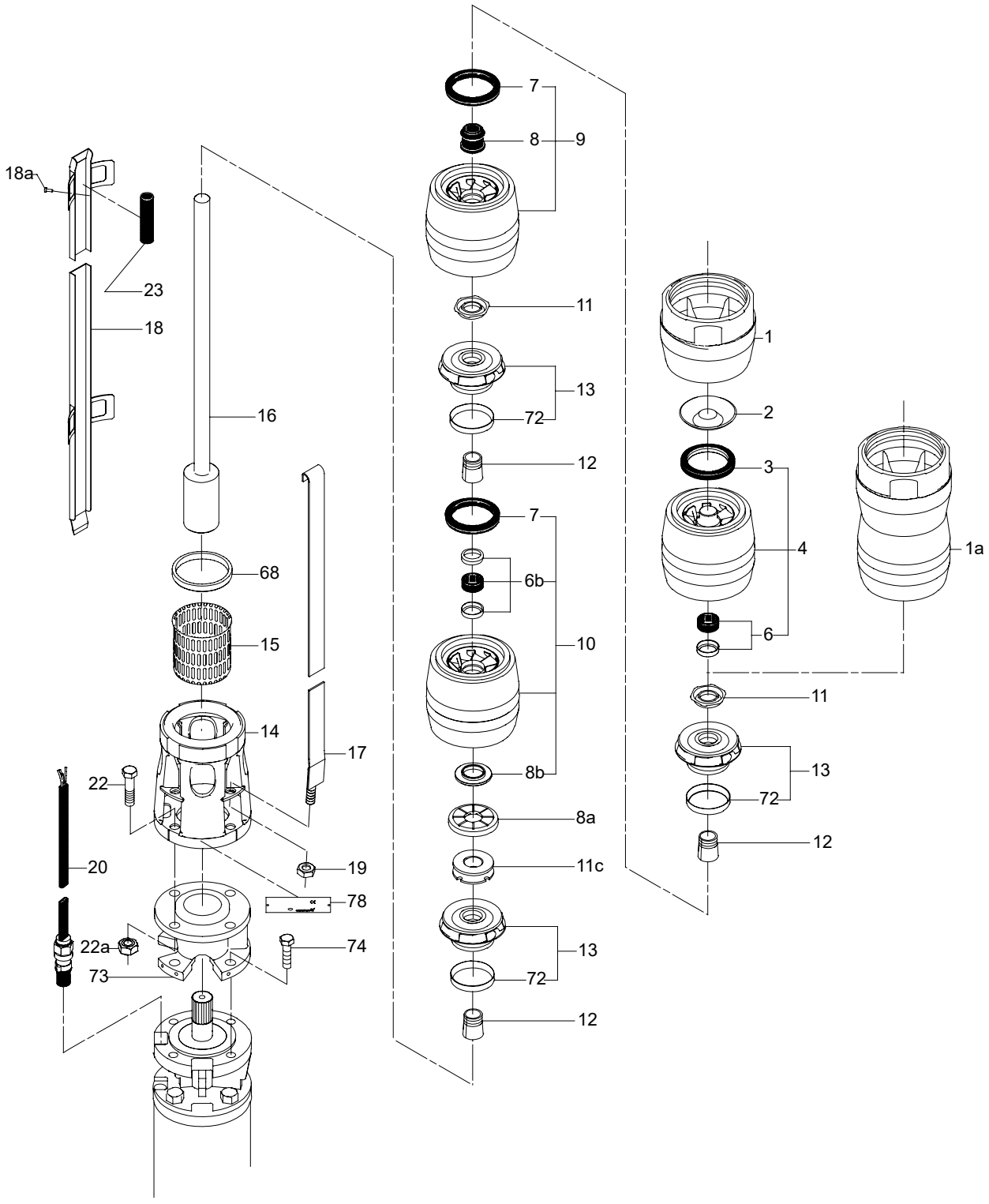
18a
23
18
16
68
15
14
17
22
20
22a
73
19
78
74
7
8
9
11
13
72
12
7
6b
10
8b
8a
11c
13
72
12
1
2
3
4
6
11
13
72
12
1a
TM005474

SP 46 model B

Wear parts, NBR

SP 46, SP 46 N, SP 46 R

Pos.	Kit No	97937881	97937882	97937883	97937884	97937885
	Number of stages	1-6	7-12	13-18	19-24	25-37
	Description					
3	Valve seat	1	1	1	1	1
6b	Bottom bearing	1	1	1	1	1
6b	Bearing cup	2	2	2	2	2
7	Neck ring	5	11	17	23	36
8	Bearing	5	11	17	23	36
8a	Spacing washer	1	1	1	1	1
8b	Stop ring	1	1	1	1	1
11c	Nut for stop ring	1	1	1	1	1
37	O-ring	-	-	1	1	1
68	Lower neck ring	1	1	1	1	1
72	Wear ring	6	12	18	24	37
142a	Bearing for valve cup	1	1	1	1	1

Wear parts, FKM

SP 46, SP 46 N, SP 46 R

Pos.	Kit No	97937903	97937904	97937905	97937906	97937907
	Number of stages	1-6	7-12	13-18	19-24	25-37
	Description					
3	Valve seat	1	1	1	1	1
6b	Bottom bearing	1	1	1	1	1
6b	Bearing cup	2	2	2	2	2
7	Neck ring	5	11	17	23	35
8	Bearing	5	11	17	23	36
8a	Spacing washer	1	1	1	1	1
8b	Stop ring	1	1	1	1	1
11c	Nut for stop ring	1	1	1	1	1
37	O-ring	-	-	1	1	1
68	Lower neck ring	1	1	1	1	1
72	Wear ring	6	12	18	24	37
142a	Bearing for valve cup	1	1	1	1	1

Wear parts, wear-resistant bearing

SP 46, SP 46 N, SP 46 R

Pos.	Kit No	98098319	98098320	98098321	98098322	98098323
	Number of stages	1-6	7-12	13-18	19-24	25-37
	Description					
3	Valve seat	1	1	1	1	1
6b	Bottom bearing	1	1	1	1	1
6b	Bearing cup	2	2	2	2	2
7	Neck ring	5	11	17	23	36
8	Bearing	5	11	17	23	36
8a	Spacing washer	1	1	1	1	1
8b	Stop ring	1	1	1	1	1
11c	Nut for stop ring	1	1	1	1	1
37	O-ring	-	-	1	1	1
68	Lower neck ring	1	1	1	1	1
72	Wear ring	6	12	18	24	37
142a	Bearing for valve cup	1	1	1	1	1

Cable termination (shrink-flex)
See the SP data booklet.

SP 46 model B

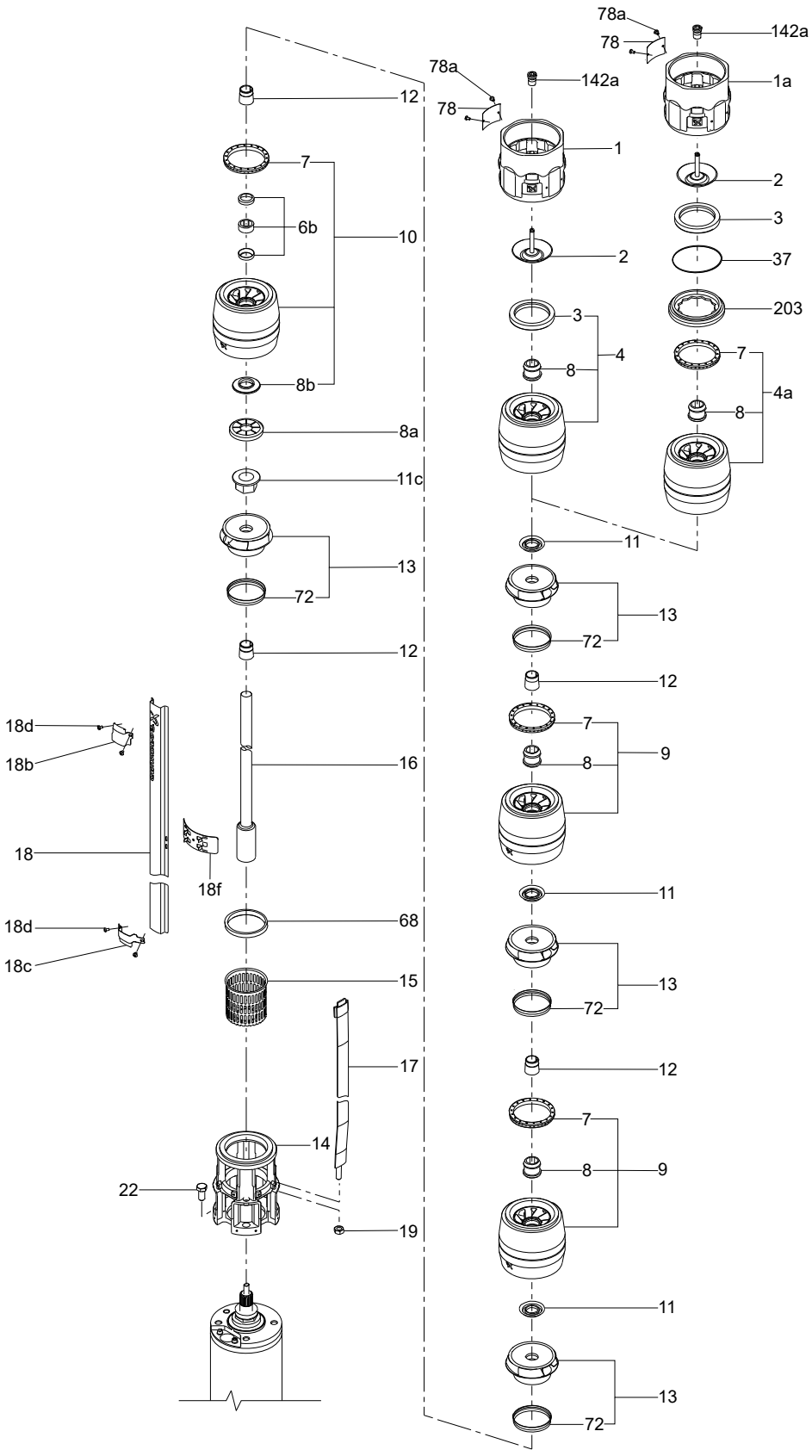

SP 60 model A

Wear parts

SP 60, SP 60 N, SP 60 R

Pos.	Kit No	96440369	96440371	96440373	96440375	96488049
	Number of stages	1-6	7-10	11-16	17-22	23-30
	Description					
3	Valve seat	1	1	1	-	-
6	Top bearing	1	1	1	-	1
6b	Lower bearing	1	1	1	1	1
7	Neck ring	5	9	15	21	29
8	Bearing	4	8	14	20	28
8a	Spacing washer	1	1	1	1	1
8b	Stop ring	1	1	1	1	1
11c	Nut for stop ring	1	1	1	1	1
68	Bottom neck ring	1	1	1	1	1
72	Wear ring	6	10	16	22	30

Wear parts

SP 60 NES

Pos.	Kit No	96440370	96440372	96440374	96440376
	Number of stages	1-6	7-10	11-16	17-22
	Description				
3	Valve seat	1	1	1	-
6	Top bearing	1	1	1	-
6b	Lower bearing	1	1	1	1
7	Neck ring	5	9	15	21
8	Bearing	4	8	14	20
8a	Spacing washer	1	1	1	1
8b	Stop ring	1	1	1	1
11c	Nut for stop ring	1	1	1	1
68	Bottom neck ring	1	1	1	1
72	Wear ring	6	10	16	22

Cable termination (shrink-flex)

See the SP data booklet.

SP 60 model A

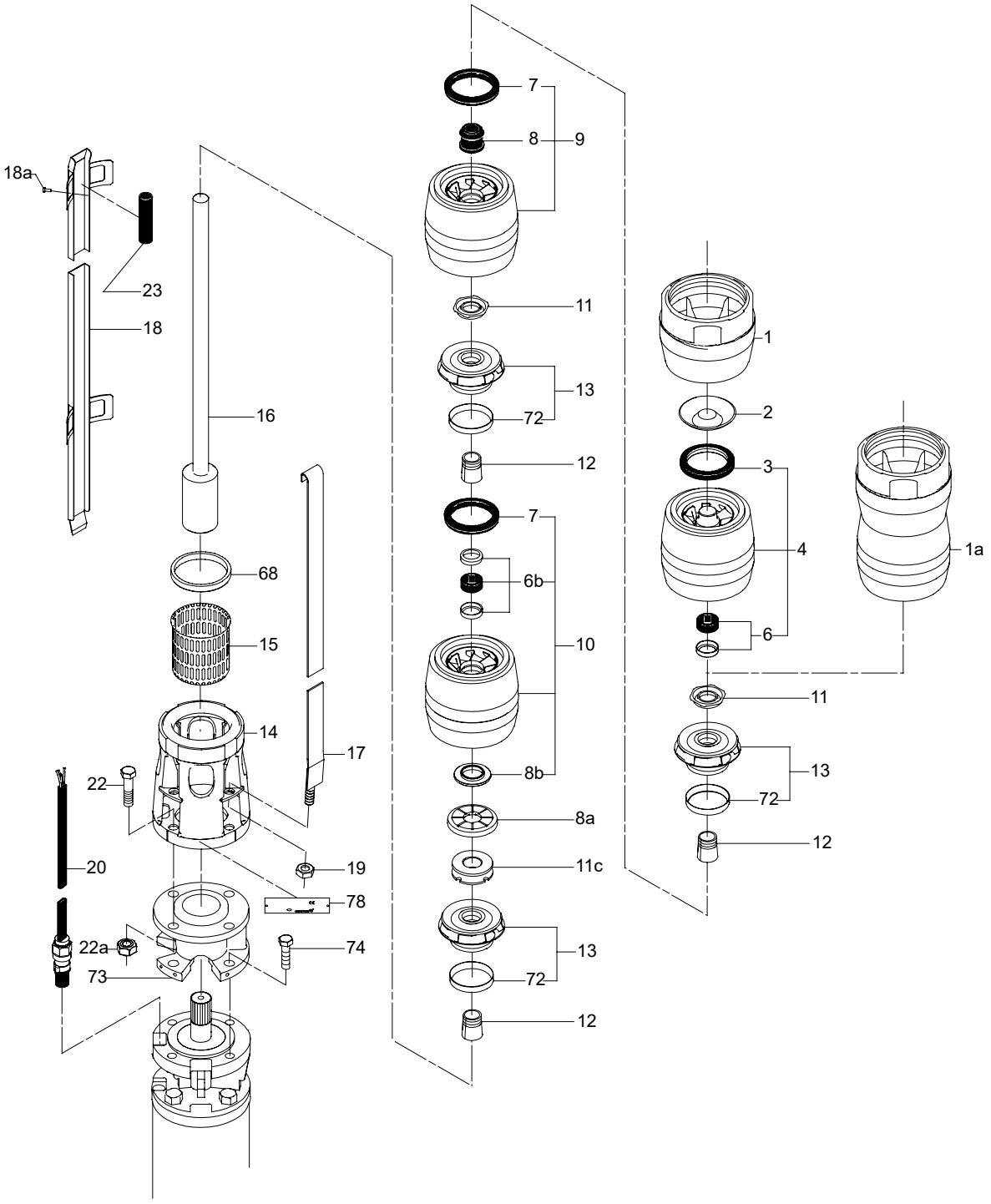
18a
23
18
16
68
15
14
17
22
20
22a
73
19
78
74
7
8
9
11
13
72
12
7
6b
10
8b
8a
11c
13
72
12
1
2
3
4
6
11
13
72
12
1a
TM005474

SP 60 model B

Wear parts, NBR

SP 60, SP 60 N, SP 60 R

Pos.	Kit No	97937886	97937887	97937888	97937889	97937890
	Number of stages	1-6	7-12	13-18	19-24	25-30
	Description					
3	Valve seat	1	1	1	1	1
6b	Bottom bearing	1	1	1	1	1
6b	Bearing cup	2	2	2	2	2
7	Neck ring	5	11	17	23	29
8	Bearing	5	11	17	23	29
8a	Spacing washer	1	1	1	1	1
8b	Stop ring	1	1	1	1	1
11c	Nut for stop ring	1	1	1	1	1
37	O-ring	-	-	1	1	1
68	Lower neck ring	1	1	1	1	1
72	Wear ring	6	12	18	24	30
142a	Bearing for valve cup	1	1	1	1	1

Wear parts, FKM

SP 60, SP 60 N, SP 60 R

Pos.	Kit No	97937908	97937909	97937910	97937911	97937912
	Number of stages	1-6	7-12	13-18	19-24	25-30
	Description					
3	Valve seat	1	1	1	1	1
6b	Bottom bearing	1	1	1	1	1
6b	Bearing cup	2	2	2	2	2
7	Neck ring	5	11	17	23	29
8	Bearing	5	11	17	23	29
8a	Spacing washer	1	1	1	1	1
8b	Stop ring	1	1	1	1	1
11c	Nut for stop ring	1	1	1	1	1
37	O-ring	-	-	1	1	1
68	Lower neck ring	1	1	1	1	1
72	Wear ring	6	12	18	24	30
142a	Bearing for valve cup	1	1	1	1	1

Wear parts, wear-resistant bearing

SP 60, SP 60 N, SP 60 R

Pos.	Kit No	98098324	98098325	98098326	98098327	98098328
	Number of stages	1-6	7-12	13-18	19-24	25-30
	Description					
3	Valve seat	1	1	1	1	1
6b	Bottom bearing	1	1	1	1	1
6b	Bearing cup	2	2	2	2	2
7	Neck ring	5	11	17	23	29
8	Bearing	5	11	17	23	29
8a	Spacing washer	1	1	1	1	1
8b	Stop ring	1	1	1	1	1
11c	Nut for stop ring	1	1	1	1	1
37	O-ring	-	-	1	1	1
68	Lower neck ring	1	1	1	1	1
72	Wear ring	6	12	18	24	30
142a	Bearing for valve cup	1	1	1	1	1

Cable termination (shrink-flex)

See the SP data booklet.

SP 60 model B

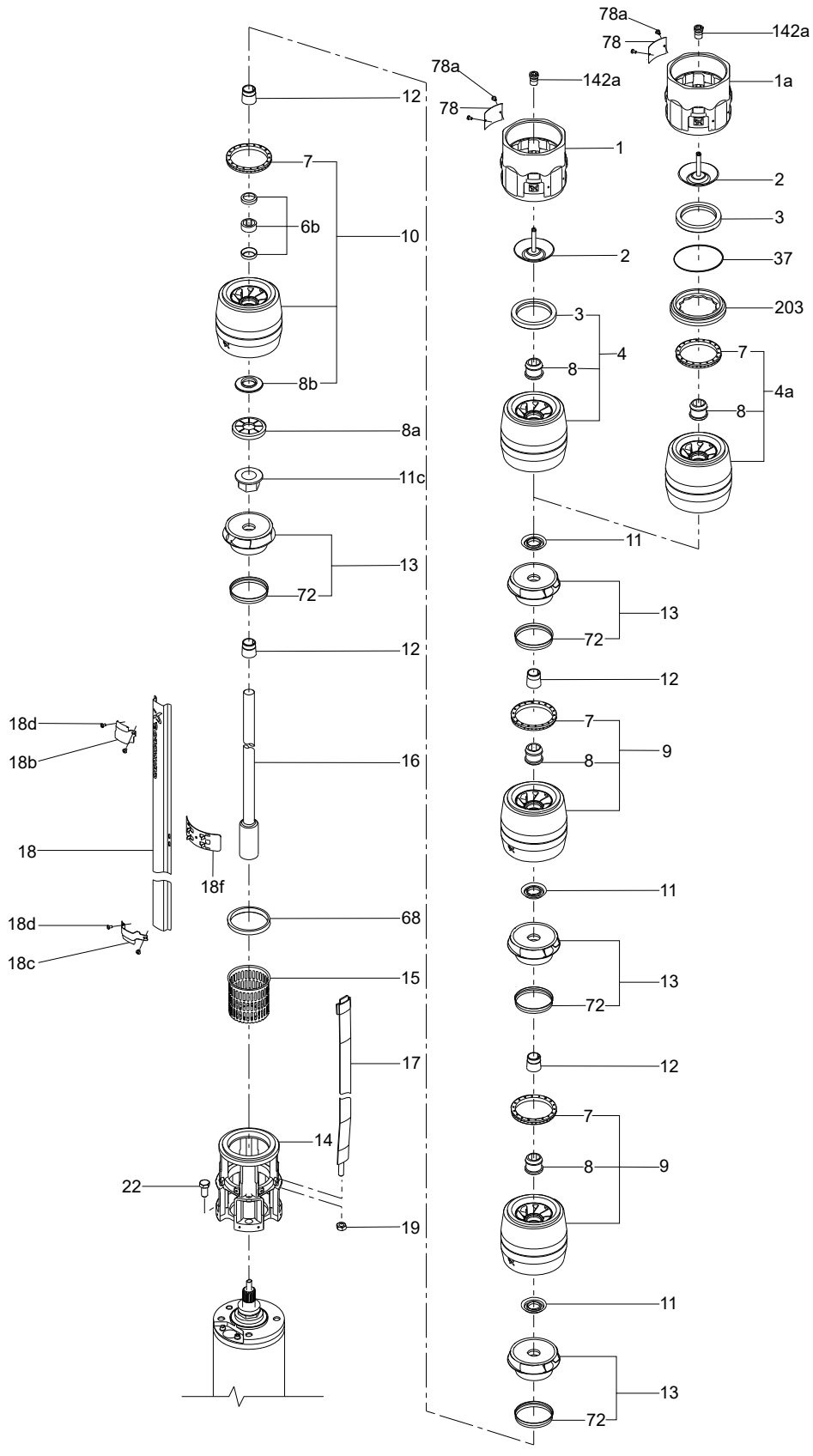

SP 77 model C, SP 95 model B

Wear parts

Pos.	Pump type	SP 77, SP 77 N, SP 77 R			SP 95, SP 95 N, SP 95 R		
	Kit No	*96440256*	*96440258*	*96440260*	*96440715*	*96440716*	*96440717*
	Description / number of stages	1-8	9-14	15-22	1-8	9-14	15-20
1d	O-ring	1	1	1	1	1	1
3	Valve seat	1	1	1	1	1	1
6	Bearing	1	1	1	1	1	1
7	Neck ring	7	13	21	7	13	19
8	Bearing	7	13	21	7	13	19
8a	Spacing washer	1	1	1	1	1	1
8b	Stop ring	1	1	1	1	1	1
11c	Nut for stop ring	1	1	1	1	1	1
72	Wear ring	8	14	22	8	14	20

Cable termination (shrink-flex)

See the SP data booklet.

SP 77 model C, SP 95 model B

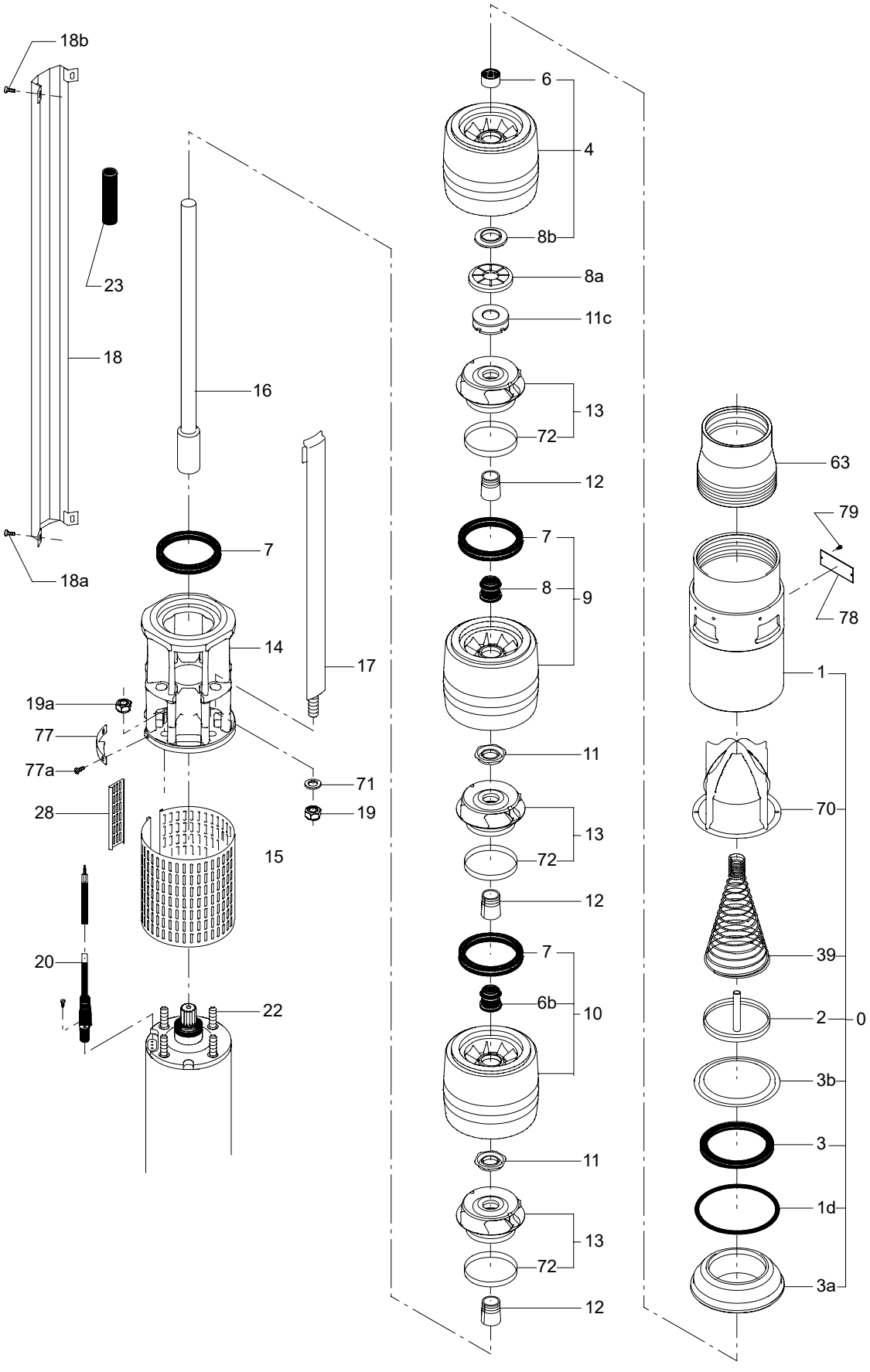

SP 125 model C, D

50/60 Hz

Impeller

Pos.	Pump type	SP 125	SP 125 N	SP 125 R
	Kit No	*97506694*	*96903234*	*96903235*
	Description			
11, 12, 13, 72	Impeller complete	1	1	1

Reduced-impeller

Pos.	Pump type	SP 125	SP 125 N	SP 125 R
	Kit No	*97506727*	*96907105*	*96907107*
	Description			
11, 12, 13, 72	Reduced impeller complete	1	1	1

Split cone with nut

Pos.	Pump type	SP 125	SP 125 N	SP 125 R
	Kit No	*96903149*	*96903149*	*96903172*
	Description			
11	Split cone nut	1	1	1
12	Split cone	1	1	1

Wear parts

SP 125, SP 125 N, SP 125 R

Pos.	Kit No	*96440262*	*96440264*	*96440266*	*96488080*
	Description / number of stages	**1-4**	**5-6**	**7-10**	**11-17**
1d	O-ring	1	1	1	1
3	Valve seat	1	1	1	1
5	Stop disc	1	1	1	1
6	Top bearing	1	1	1	1
7	Neck ring	3	5	9	16
8	Bearing	3	5	9	16
72	Wear ring	4	6	10	17

Cable termination (shrink-flex)

See the SP data booklet.

SP 125 model C, D

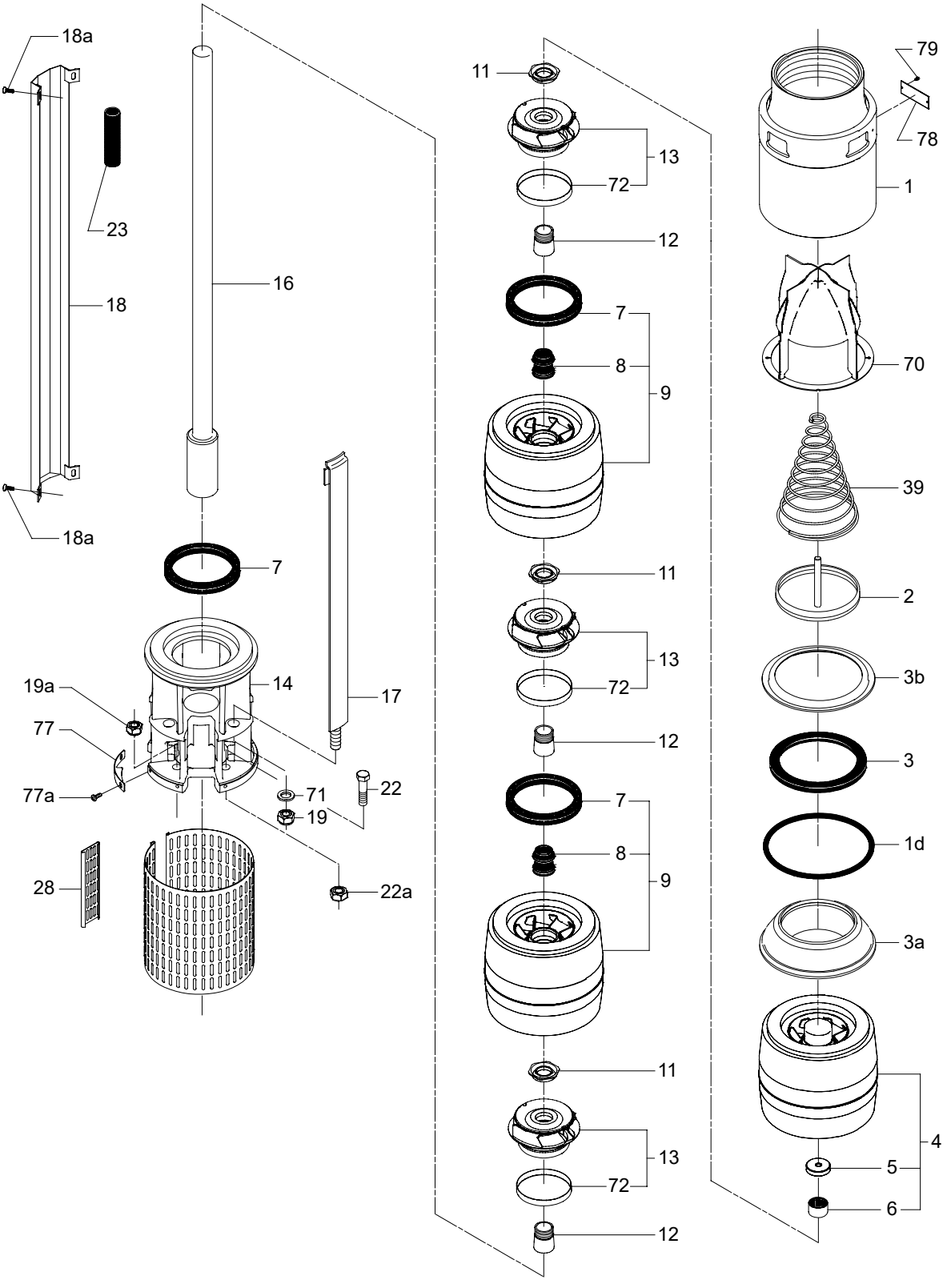

SP 160 model A, B

50/60 Hz

Impeller

Pos.	Pump type	SP 160	SP 160 N	SP 160 R
	Kit No	*97508270*	*96903236*	*96903237*
	Description			
11, 12, 13, 72	Impeller complete	1	1	1

Reduced-impeller

Pos.	Pump type	SP 160	SP 160 N	SP 160 R
	Kit No	*97508275*	*96907108*	*96907109*
	Description			
11, 12, 13, 72	Reduced impeller complete	1	1	1

Split cone with nut

Pos.	Pump type	SP 160	SP 160 N	SP 160 R
	Kit No	*96903149*	*96903149*	*96903172*
	Description			
11	Split cone nut	1	1	1
12	Split cone	1	1	1

Wear parts

SP 160, SP 160 N, SP 160 R

Pos.	Kit No	*205117*	*205118*	*96488081*
	Description / number of stages	**1-5**	**6-9**	**10-15**
1d	O-ring	1	1	1
3	Valve seat	1	1	1
5	Stop disc	1	1	1
6	Top bearing	1	1	1
7	Neck ring	4	8	14
8	Bearing	4	8	14
72	Wear ring	5	9	15

Cable termination (shrink-flex)

See the SP data booklet.

SP 160 model A, B

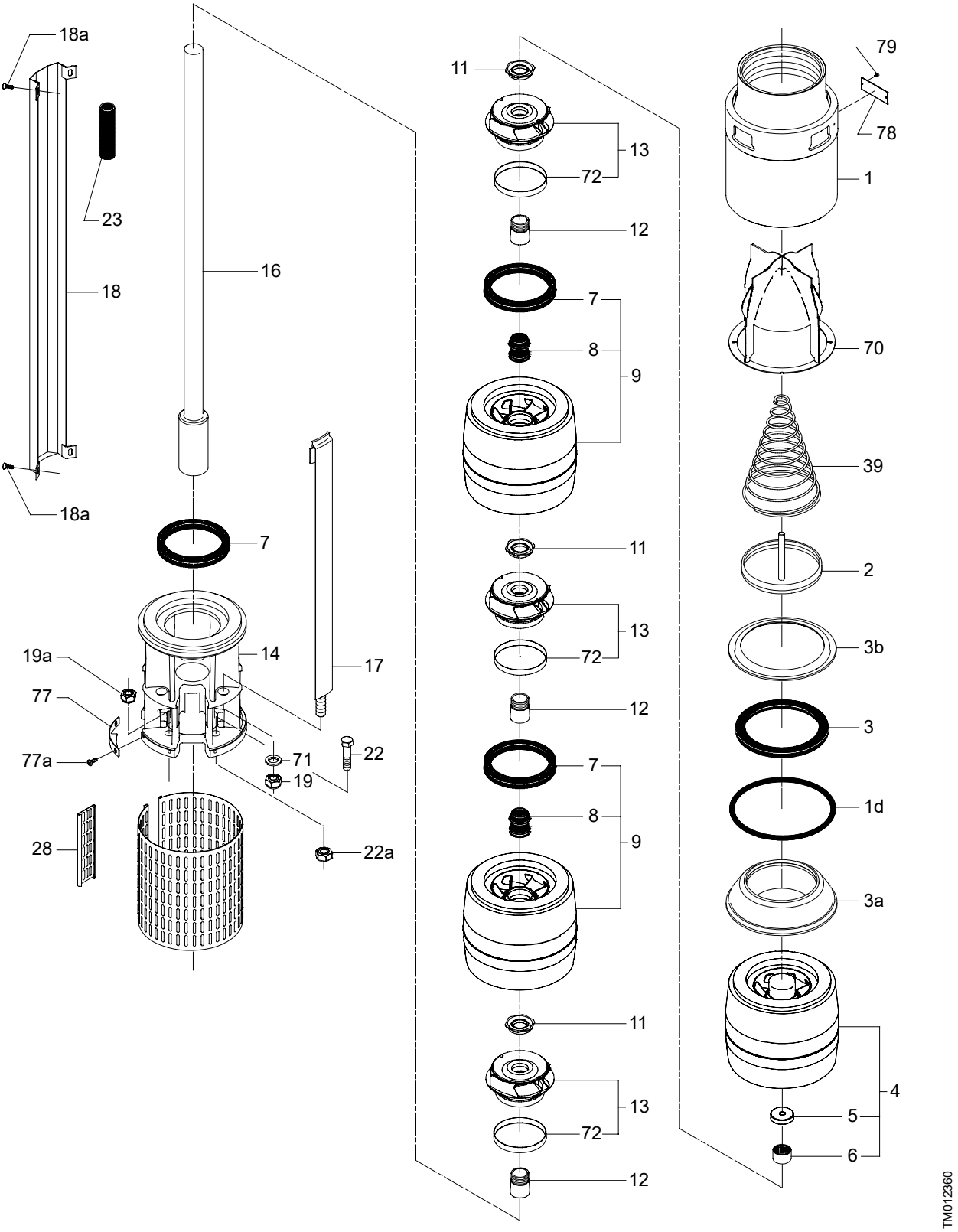

SP 215 model B, C

50/60 Hz

Impeller

Pos.	Pump type	SP 215	SP 215 N	SP 215 R
	Kit No	*97508277*	*96903238*	*96903239*
	Description			
11, 12, 13, 72	Impeller complete	1	1	1

Reduced-impeller

Pos.	Pump type	SP 215	SP 215 N	SP 215 R
	Kit No	*97508278*	*96907110*	*96907111*
	Description			
11, 12, 13, 72	Reduced impeller complete	1	1	1

Split cone with nut

Pos.	Pump type	SP 215	SP 215 N	SP 215 R
	Kit No	*97524682*	*96903175*	*96903176*
	Description			
11	Split cone nut	1	1	1
12	Split cone	1	1	1

Wear parts

SP 215, SP 215 N, SP 215 R

Pos.	Kit No	*185033*	*185034*	*185035*	*185036*
	Number of stages	1-2	3-4	5-7	8-11
	Description				
1d	O-ring	1	1	1	1
3	Valve seat	1	1	1	1
5	Stop disc	1	1	1	1
6	Top bearing	1	1	1	1
7	Neck ring	1	3	6	10
8	Bearing	1	3	6	10
72	Wear ring	2	4	7	11

Cable termination (shrink-flex)

See the SP data booklet.

SP 215 model B, C

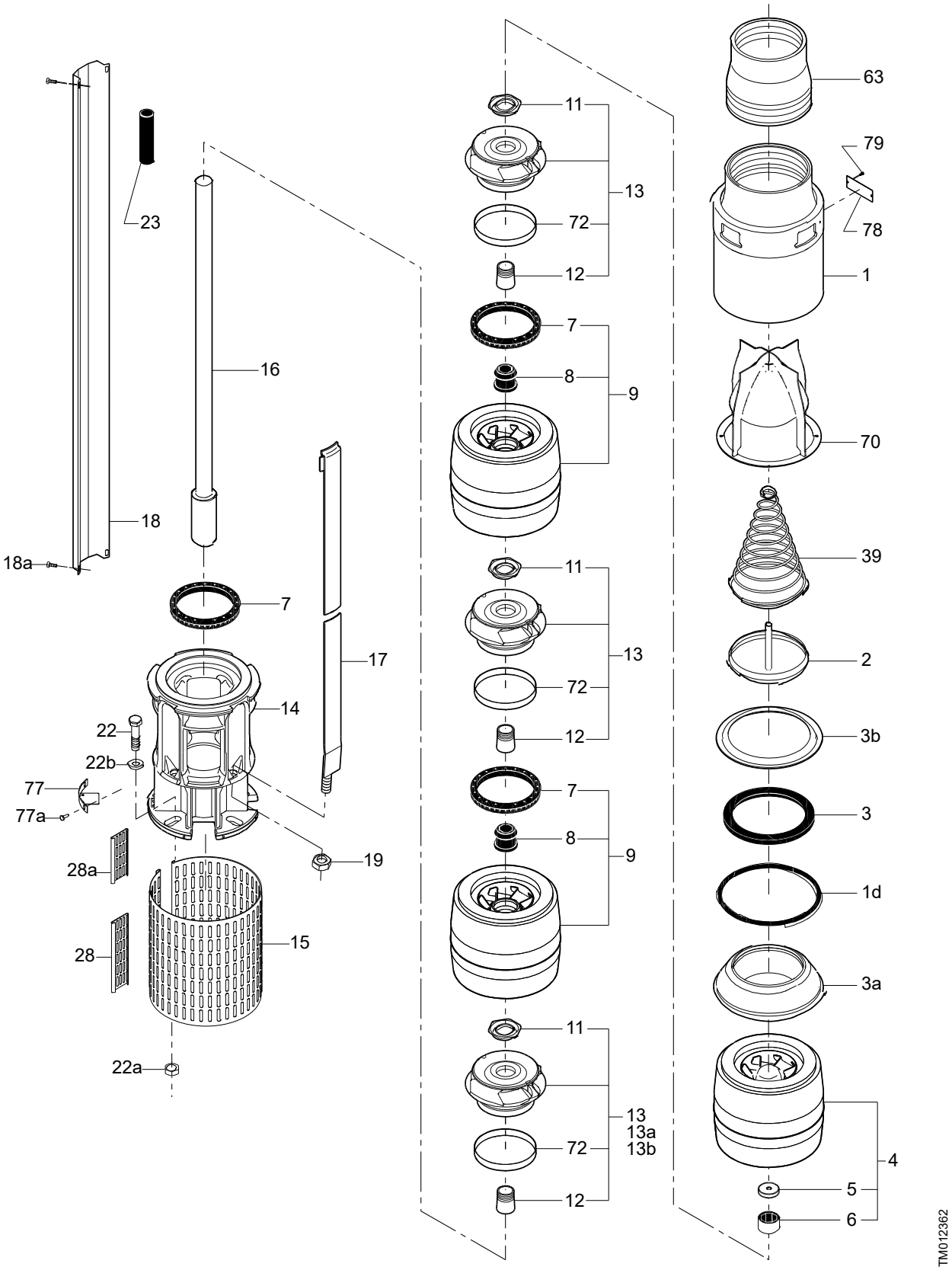

83. SPK

SPK 1, 2, 4

50/60 Hz, Models C, D

Coupling complete

Pos.	Kit No	495081	415060	415061	415314
	Motor/pump shaft diameter [mm]	11/12	14/12	19/12	15.8/12
	Description				NEMA
8	Coupling half	2	2	2	2
9	Screw	4	4	4	4
10	Pin	1	1	1	1

Metal terminal box

Pos.	All with MG 71/80 motor	
	Kit No	405179
	Description	
164a	Terminal box with gasket	1
164	Terminal box cover with gasket	1
166	Screw	4
175	Screw	4
176	Terminal complete	1

Rectangular flange

Pos.	Kit No	395104
	Description	
12	Flange	1
39	O-ring	1
35	Screw	4

Shaft seal

Pos.	Kit No	395008	985726	395091	985720	96765115	97730107
	Description	CVBV	AQBK	AUUV	AUUK	AQQV	AUUE
37a	Gasket	1	1	1	1	1	1
105	Shaft seal complete	1	1	1	1	1	1

Wear parts

Pos.	Kit No	395090	395089
	Number of stages	1-8	9-23
	Description		
4a	Bearing chamber	1	3
9	Coupling screw	4	4
10	Coupling pin	1	1
36	Nut	2	2
37a	Gasket	1	1
45	Neck ring	7	21
47a	Bearing ring	1	3
61	Spacer	1	1
62	Stop ring	1	1
66	Washer	1	1
66a	Washer	2	2
67	Lock nut	1	1

SPK 1, 2, 4

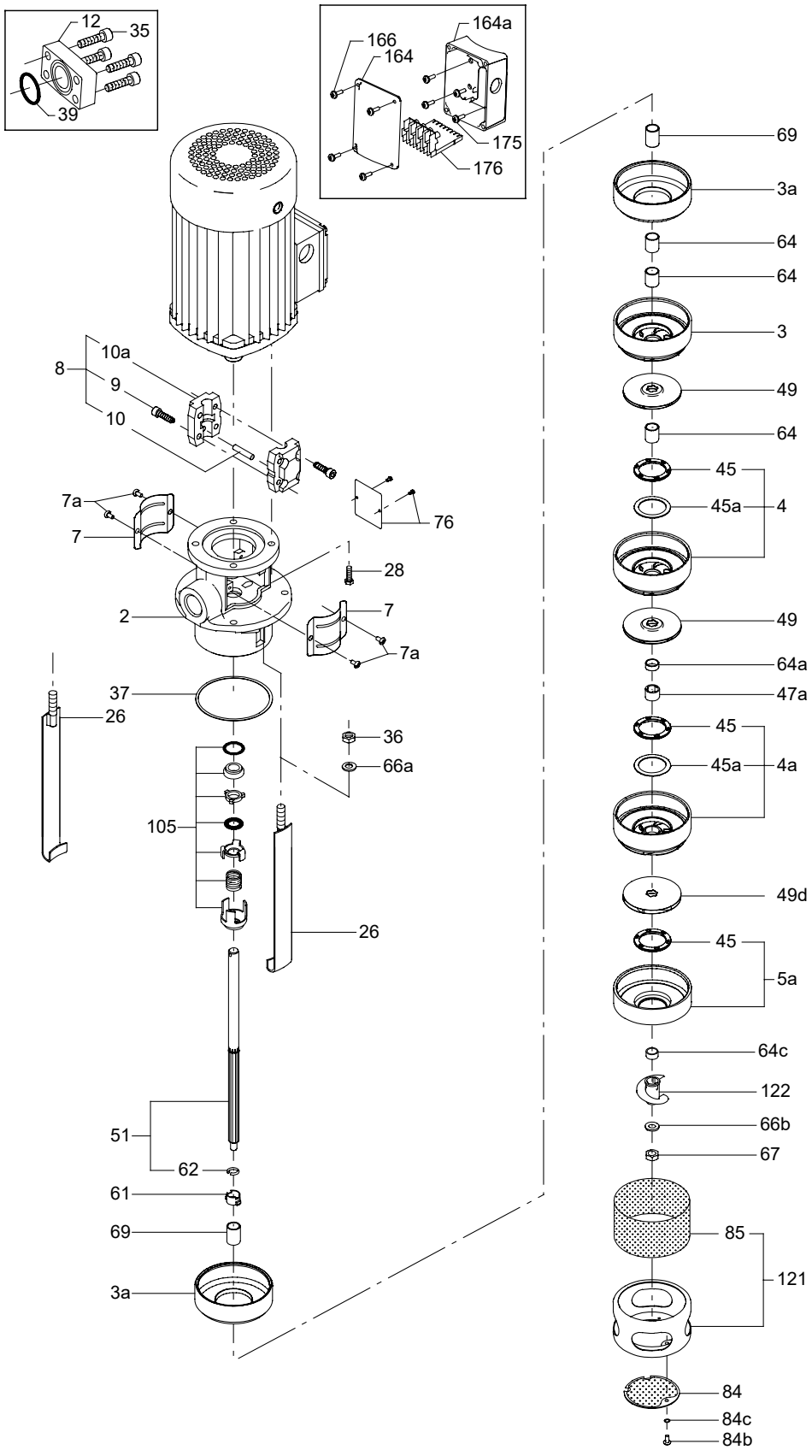
12
35
39
166
164
164a
175
176
69
3a
64
64
3
49
64
45
45a
4
49
64a
47a
45
45a
4a
49d
45
5a
64c
122
66b
67
85
121
84
84c
84b
10a
8
9
10
7a
7
76
28
2
7
7a
37
26
36
66a
105
26
51
62
61
69
3a
TM025296

SPK 8

Coupling complete

Pos.	Kit No	415078	415079	415062	415314	415315
	Motor/pump shaft diameter [mm]	**14/12**	**19/12**	**24/12**	**15.8/12**	**28.5/12**
	Description				**NEMA**	
8	Coupling half	2	2	2	2	2
9	Screw	4	4	4	4	4
10	Pin	1	1	1	1	1

Metal terminal box

Pos.	All with MG 71/80 motor	
	Kit No	405179
	Description	
164a	Terminal box with gasket	1
164	Terminal box cover with gasket	1
166	Screw	4
175	Screw	4
176	Terminal complete	1

Rectangular flange

Pos.	Kit No	405178
	Description	
12	Counter flange	1
39	O-ring	1
35	Screw	4

Shaft seal

Pos.	Kit No	395008	985726	395091	985720	96765115	97730107
	Description	**CVBV**	**AQBK**	**AUUV**	**AUUK**	**AQQV**	**AUUE**
37a	Gasket	1	1	1	1	1	1
105	Shaft seal complete	1	1	1	1	1	1

Wear parts

Pos.	Number of impellers	1	2-3	5	7-9	12-15	9
			incl.	**excl.**	**excl.**		
			SPK 8-5/5	**SPK 8-5/5**	**SPK 8-12/9**		**SPK 8-12/9**
	Only pump length L = 1005 mm			**SPK 8-15/2-3**			**SPK 8-15/5-15**
	Kit No	395093	395094	395095	395096	395097	395098
	Number of stages	**1-15**	**2-15**	**7-15**	**7-15**	**12-15**	**12**
	Description						
4a	Bearing chamber	1	1	2	2	3	3
9	Coupling screw	4	4	4	4	4	4
10	Coupling pin	1	1	1	1	1	1
36	Nut	2	2	2	2	2	2
37a	Gasket	1	1	1	1	1	1
45	Neck ring	1	4	4	7	12	13
47a	Bearing ring	1	1	2	2	3	3
61	Spacer	1	1	1	1	1	1
62	Stop ring	1	1	1	1	1	1
66	Washer	1	1	1	1	1	1
66a	Washer	2	2	2	2	2	2
67	Lock nut	1	1	1	1	1	1

SPK 8

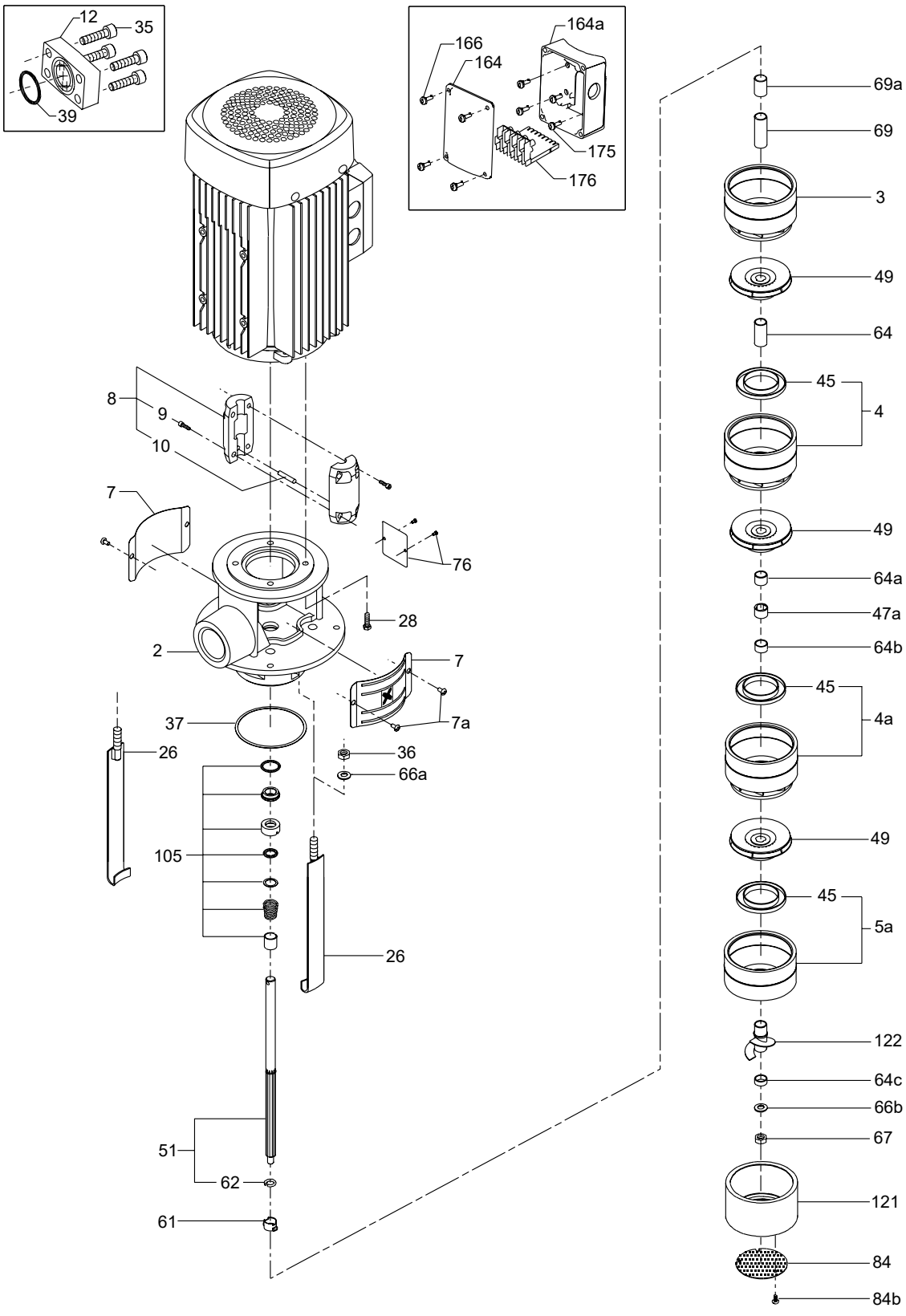
12
35
39
166
164
164a
175
176
69a
69
3
49
64
45
4
49
64a
47a
64b
45
4a
49
45
5a
122
64c
66b
67
121
84
84b
8
9
10
7
76
28
2
7
7a
37
26
36
66a
105
26
51
62
61
TM025311

84. SPO

SPO 3, SPO 5

50 Hz

Capacitor

Pos.	Description	Model	3-40 3-50 5-45	3-65 5-55	3-75 5-70
		Pcs./kit No	*96511648*	*96511649*	*96511660*
13	O-ring	2	•	•	•
37b	O-ring	1	•	•	•
161	Capacitor	20 uF	•		
		25 uF		•	
		30 uF			•

Drain plug

Pos.	Description	Variant B and C
	Kit No	*96511699*
18	Plug (priming/drain)	2
100	O-ring	2

Filter

Pos.	Description	Submersible
	Kit No	*96511661*
50	Suction strainer	1
84	Strainer	1
104	Suction cover	1
115	Screw	3

Pos.	Description		Dry installed
	Kit No		*96511663*
28	Screw	M6 x 12	8
28a	Washer		8
36a	Nut	M6	8
37a	O-ring		1
56	Baseplate		1

Level switch

Pos.	Description		Variant A and C
	Kit No		*96511662*
13	O-ring		2
37b	O-ring		1
182	Level switch w/cable	0.7 m	1
182c	Rubber bush		1

Lower shaft seal

Pos.	Description/kit No	*96511650*
105	Shaft seal, lower	1

Shaft seal, maintenance

Pos.	Description/kit No	*98092153*
37	O-ring	1
62	Seeger washer	1
69a	Washer	1
100	O-ring	1
105	Shaft seal, lower	1
105a	Shaft seal, upper	1
155	Oil cup	1
193	Plug	1
-	Oil MARCOL 82	1 (0.18 l)

Cable

Pos.	Description	Plug, voltage	Australian, 220-240 V			Schuko, 220-240 V			w/o plug, 220-240 V	w/o plug, 380-415 V	
		Model	3-30 3-50	3-40 3-50 3-65 5-45 5-55	3-75 5-70	3-50 3-65 5-55 5-70	3-40 3-50 3-65 5-45 5-55	3-75 5-70	3-40	3-50 3-65 5-55 5-70	3-40 3-50 3-65 3-75 5-45 5-55 5-70
		Pcs./kit No	*98364131*	*98364079*	*98364116*	*98364136*	*98364141*	*98364145*	*98364148*	*98364150*	*98364162*
20	Cable		(3 m)	(20 m)	(20 m)	(4 m)	(20 m)	(20 m)	(3 m)	(4 m)	(20 m)
20c	Rubber bush	1	•	•	•	•	•	•	•	•	•
13	O-ring	2	•	•	•	•	•	•	•	•	•
37b	O-ring	1	•	•	•	•	•	•	•	•	•

Hydraulic

Pos.	Description	SPO model	3-30	3-40	3-50	3-65	3-75	5-45	5-55	5-70
		Kit No	*98369108*	*96511647*	*96511646*	*98369109*	*98369110*	*96511651*	*98369122*	*98369124*
4	Chamber		2	3	3	4	5	3	4	5
5a	Bottom chamber		1	1	1	1	1	1	1	1
6	Back side disc		1	1	1	1	1	1	1	1
49	Impeller cpl.		2	3	4	5	6	4	5	6
64	Spacer ring		4	4	4	5	6	4	5	6
64c	Spacer ring		1	1	1	1	1	1	1	1
64d	Washer		3	1	-	-	-	-	-	-
66	Washer		1	1	1	1	1	1	1	1
67	Lock nut		1	1	1	1	1	1	1	1
69	Spacer for shaft seal		1	1	1	1	1	1	1	1
73a	Threaded fixing ring		1	1	1	1	1	1	1	1
75	Centring ring		1	1	1	1	1	1	1	1

SPO 3, SPO 5

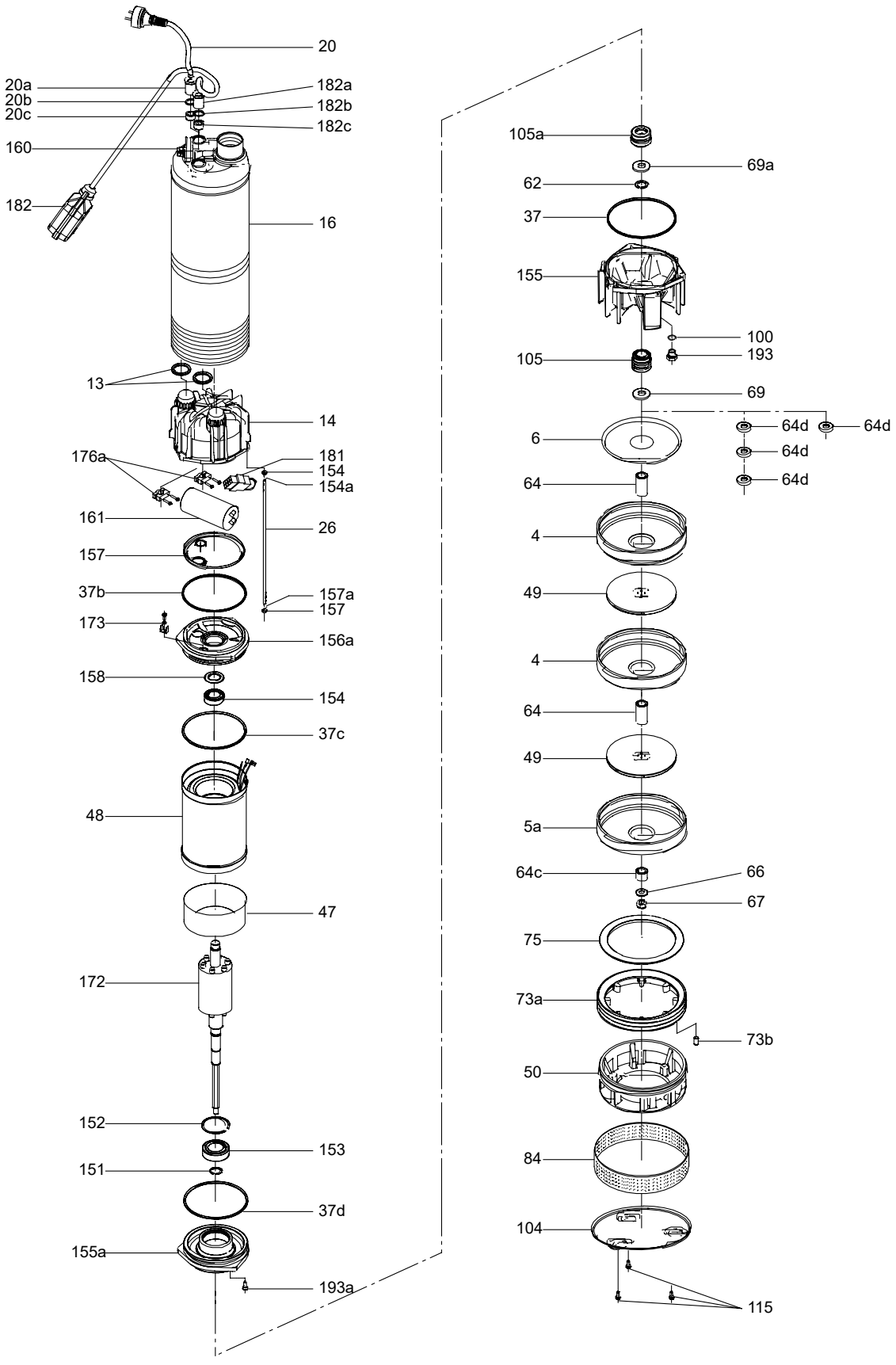

Variant A and C

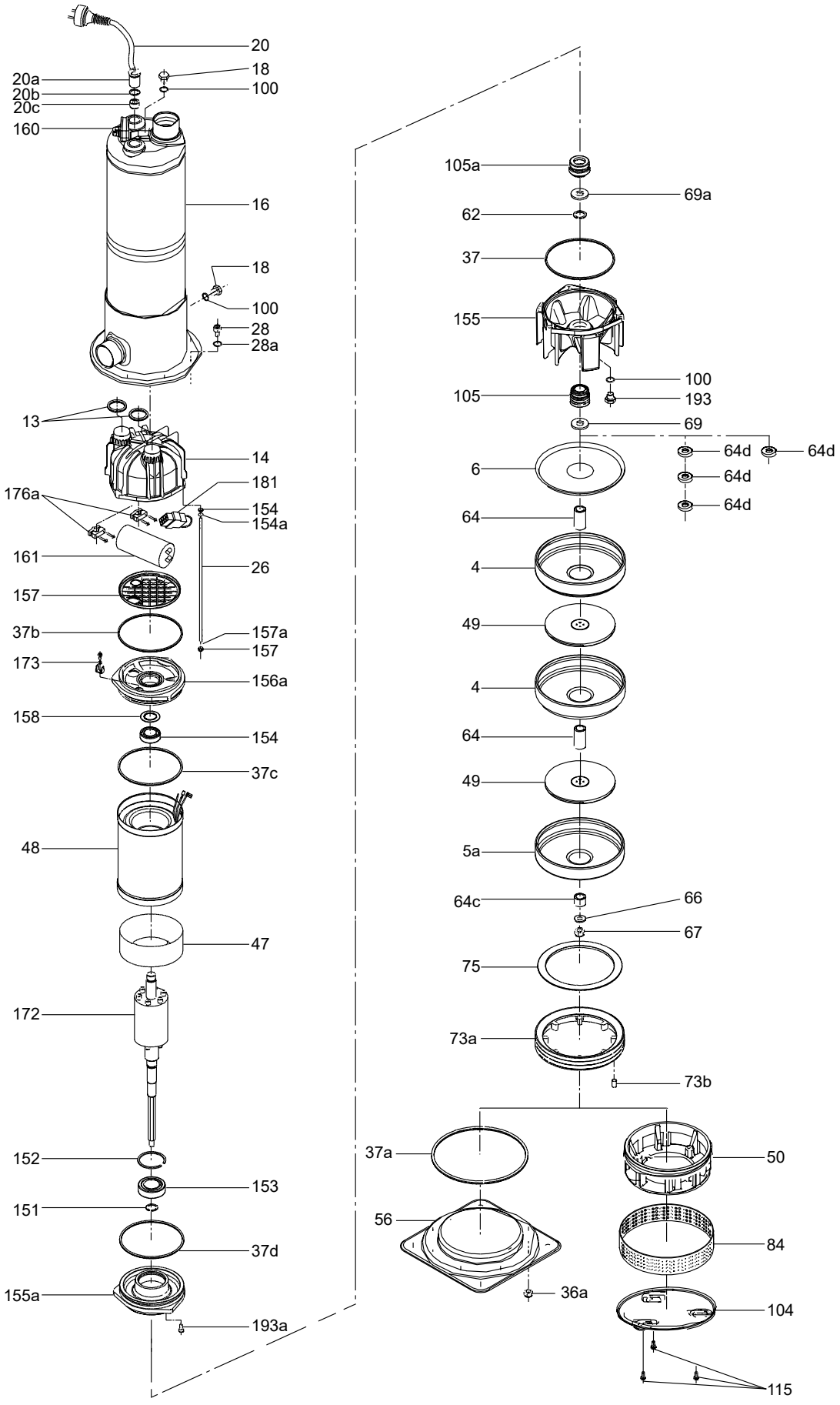

Variant B and C

85. SQ, SQE

SQ, SQE, SQE-NE

50/60 Hz, Pump, model B

Wear parts

Pos.	Pump type	SQ(E)-N1-35 to 95	SQ(E)-N1-110 to 155	SQ(E)-N2- 35 to 70	SQ(E)-N2- 85 to 130
		5SQ(E)-90 to 270	5SQ(E)-320 to 450	10SQ(E)-110 to 200	10SQ(E)-240 to 380
	Kit No	*96479862*	*96479864*	*96479866*	*96479868*
	Description				
4a	Empty chamber	1	2	1	1
9b	Chamber, upper	6	10	4	8
9c	Chamber, lower	6	10	4	8
	Neck ring	6	10	4	8
13	Impeller	6	10	4	8
14	Inlet part	1	1	1	1
32	Guide vane	6	10	4	8
64	Priming screw	1	1	1	1
87	Cone	1	1	1	1

Pos.	Pump type	SQ(E)-NE2- 35 to 65	SQ(E)-NE2- 75 to 115	SQ(E)-N3- 30 to 55	SQ(E)-N3- 65 to 105
		10SQ(E)-NE-100 to 180	10SQ(E)-NE-220-340	15SQ(E)- 70 to 150	15SQ(E)- 180 to 290
	Kit No	*96439551*	*96439552*	*96479869*	*96479870*
	Description				
4a	Empty chamber	1	1	1	2
9b	Chamber, upper	4	8	4	8
9c	Chamber, lower	4	8	4	8
	Neck ring	4	8	4	8
13	Impeller	4	8	4	8
14	Inlet part	1	1	1	1
32	Guide vane	4	8	4	8
64	Priming screw	1	1	1	1
87	Cone	1	1	1	1

Pos.	Pump type	SQ(E)-N5 15 to 35	SQ(E)-N5 50 to 70	SQ(E)-NE5 15 to 35	SQ(E)-NE5 45 to 65	SQ(E)-N7 15 to 55
		22SQ(E) 40 to 120	22SQ(E) 160 to 220	22SQ(E)-NE 40 to 110	22SQ(E)-NE 140 to 210	30SQ(E) 40 to 170
	Kit No	*96479871*	*96479873*	*96439560*	*96439561*	*96479874*
	Description					
4a	Empty chamber	1	1	1	1	1
9b	Chamber, upper	3	6	3	6	4
9c	Chamber, lower	3	6	3	6	4
13	Impeller	3	6	3	6	4
14	Inlet part	1	1	1	1	1
64	Priming screw	1	1	1	1	1
87	Cone	1	1	1	1	1

Valve

Pos.		Valve casing complete		Valve casing
		Standard	NE	NE
	Kit No	*96427517*	*96439570*	*96427518*
	Description			
1	Valve casing	1	1	1
1d	O-ring	1	1	1
2	Valve cup	1	1	-
3	Valve seat	1	1	-
6	Top bearing	1	1	1
7a	Retaining ring	1	1	1
39	Valve spring	1	1	-
70	Valve guide	1	1	1

SQ, SQE, SQE-NE

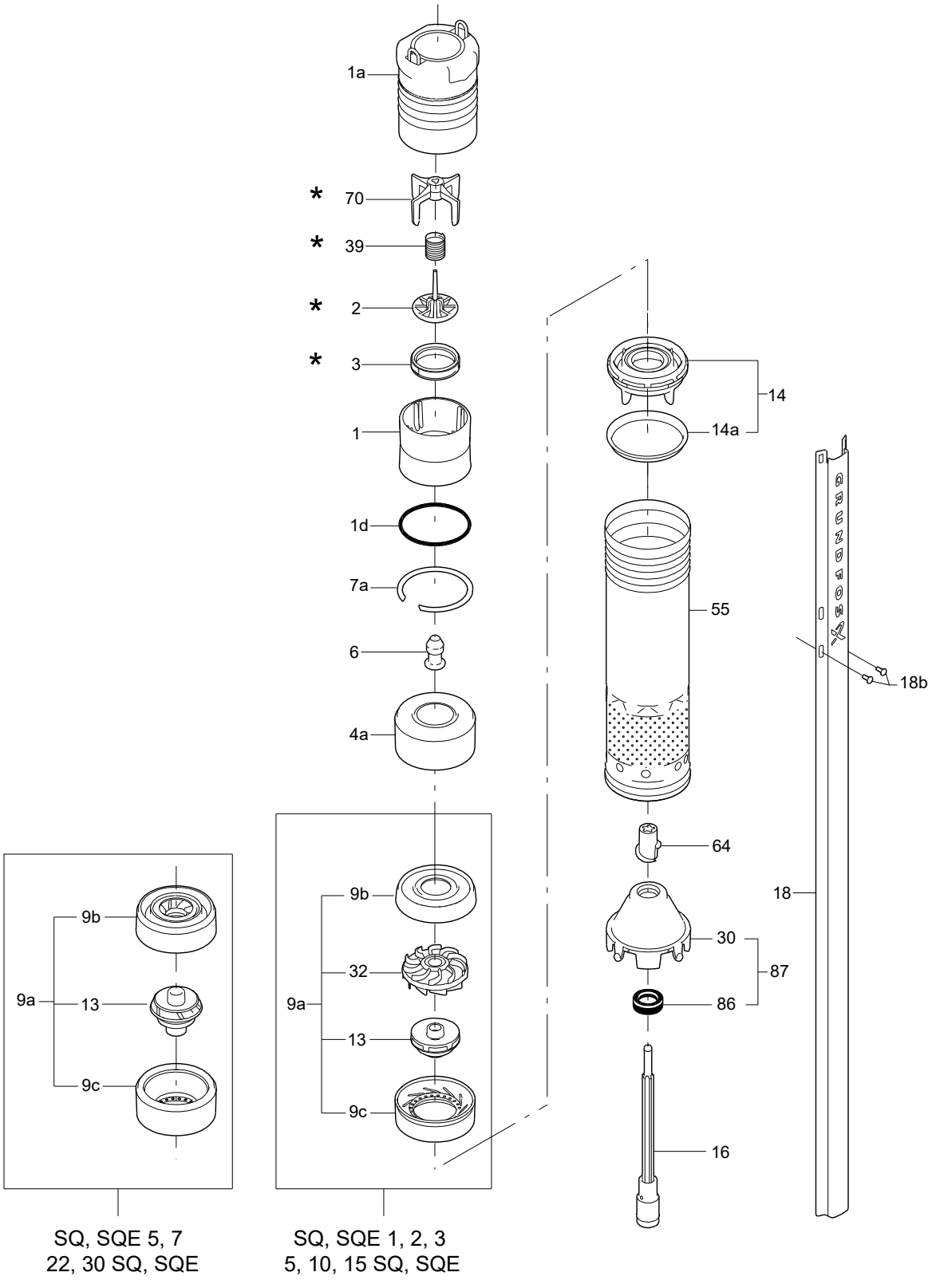

*: SQE-NE for Europe, Asia and Japan does not include marked positions 70, 39, 2 and 3 (valve)

Motor, model B 50/60 Hz

Rotor (only motor model A)

Pos.		Standard version			NE version		
	Motor size (kW)	0.63 kW	1.05 kW	1.73 kW	0.63 kW	1.05 kW	1.73 kW
	Kit No	*96427521*	*96427522*	*96427523*	*96427524*	*96427525*	*96427526*
	Description						
202	Rotor	1	1	1	1	1	1
202a	Stop ring	1	1	1	1	1	1
202b	Strainer	1	1	1	1	1	1
203	Thrust bearing	1	1	1	1	1	1
205	Bearing plate	1	1	1	1	1	1

Motor cable (only motor model B)

	Standard version				NE version	Standard
Area	Europe/Asia/South America					Japan
Length (m) / Dimensions	3 x 1.5 mm^2	3 x 2.5 mm^2	3 x 4.0 mm^2	3 x 6.0 mm^2	3 x 12 AWG	3 x 1.25 mm^2
1.5	*96160869*	-	-	-	*96160882*	*96160893*
5.0	*96160870*	-	-	-	*96160883*	-
10	*96160871*	-	-	-	*96160884*	-
15	*96160872*	-	-	-	*96160885*	-
20	*96160873*	-	-	-	*96160886*	-
30	*96160874*	-	-	-	*96160887*	-
40	*96160875*	*96160967*	-	-	*96160888*	-
50	*96160876*	*96160968*	-	-	*96160889*	-
60	*96160877*	*96160969*	-	-	*96160890*	-
70	*96160878*	*96160580*	-	-	*96160891*	-
80	*96160879*	*96160581*	*96160582*	-	*96160892*	-
90	*96160880*	*96160958*	*96160971*	*96160973*	*96160979*	-
100	*96160881*	*96160970*	*96160972*	*96160974*	*96160980*	-
110	-	-	-	-	*96160981*	-
120	-	-	-	-	*96160982*	-

Cable termination

Cable size		Kit No
1.5 - 2.5 mm^2	14 AWG	*96021462*
4.0 - 6.0 mm^2	14 AWG	*96021473*

Motor cable

	Standard		NE version
Area	North America		North America/Japan
Dimensions	3 x 14 AWG		3 x 12 AWG
Length (ft)			
5	*96160894*	1 x 200-240 V	-
	96160966	1 x 115 V	-
25	-	-	*96160895*
50	-	-	*96160896*
75	-	-	*96160897*
100	-	-	*96160898*
125	-	-	*96160899*
150	-	-	*96160900*
175	-	-	*96160901*
200	-	-	*96160902*
225	-	-	*96160903*
250	-	-	*96160904*
300	-	-	*96160905*

Screw

Pos.	Kit No	*96037388*
	Description	
18a	Screw K35 x 10	2
18b	Screw M3 x 6	2
250	Nut M4	4
250	Screw M4 x 8	4

Top cover (only motor model A)

		Standard version	NE version
Pos.	Kit No	*96427519*	*96441919*
	Description		
222a	Filling plug	1	1
224	O-ring	1	1
225	Top cover	1	1
232	Shaft seal	1	1

Pump, model A

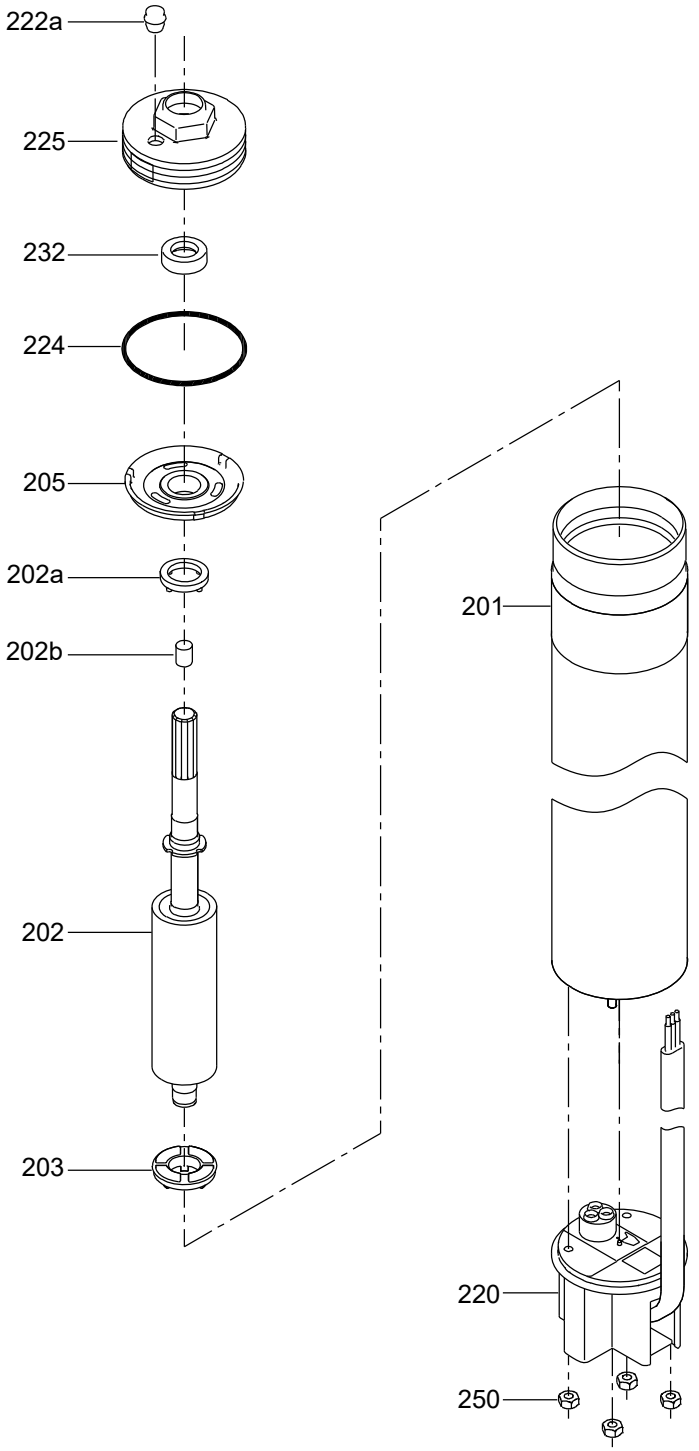

Pump, model B

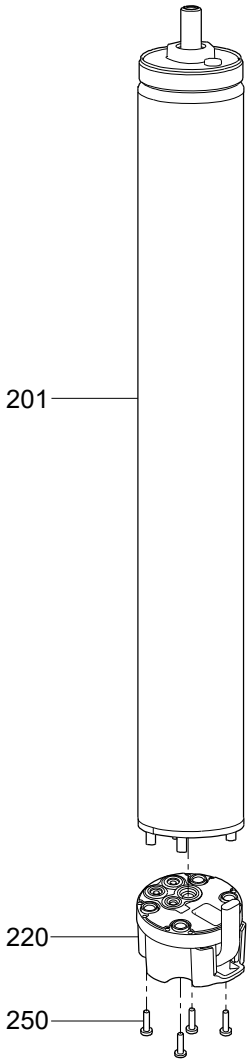

TM044892

86. SQFlex

SQF 3A (N), 16 SQF

Bearing top

Pos.	Description	80099
6	Bearing, top	8

Cable guard

Pos.	Description	SQF 3A	SQF 3A N
		95048640	95048641
18	Cable guard	1	1
18b	Screw	2	-
18c	Cable guard, lower	1	1

Connecting piece

Pos.	Description	96773221
14a	Connecting piece	1

Sand slinger

Pos.	Description	96773222
159c	Sand slinger	1

Screw

Pos.	Kit No	96037388
	Description	
18a	Screw K35 x 10 mm	2
18b	Screw M3 x 6 mm	2
250	Nut M4	4
250	Screw M4 x 8	4

Shaft end

Pos.	Description	96477039
24	Shaft with coupling	1
24a	Supporting ring	1
27	Spline protector	1
	Setting tool	1

Valve casing

Pos.	Description	96550774
2	Valve cup	1
3	Valve seat	1
6	Bearing, top	1
70	Valve guide	1
	Valve casing	1

Valve cup

Pos.	Description	96550791
2	Valve cup	1

Valve seat

Pos.	Description	96550772
3	Valve seat	1

Valve guide

Pos.	Description	80045
70	Valve guide	1

Wear parts

Pos.	Description	SQF 3A	SQF 3A N
		95048662	95048663
7	Neck ring	10	10
8	Bearing	9	-
13	Impeller	10	-
13	Impeller with split cone nut	-	3
19b	Nut	1	-
76	Washer	1	-
85	Stop ring	-	1

SQFlex 3A and SQFlex 3A N

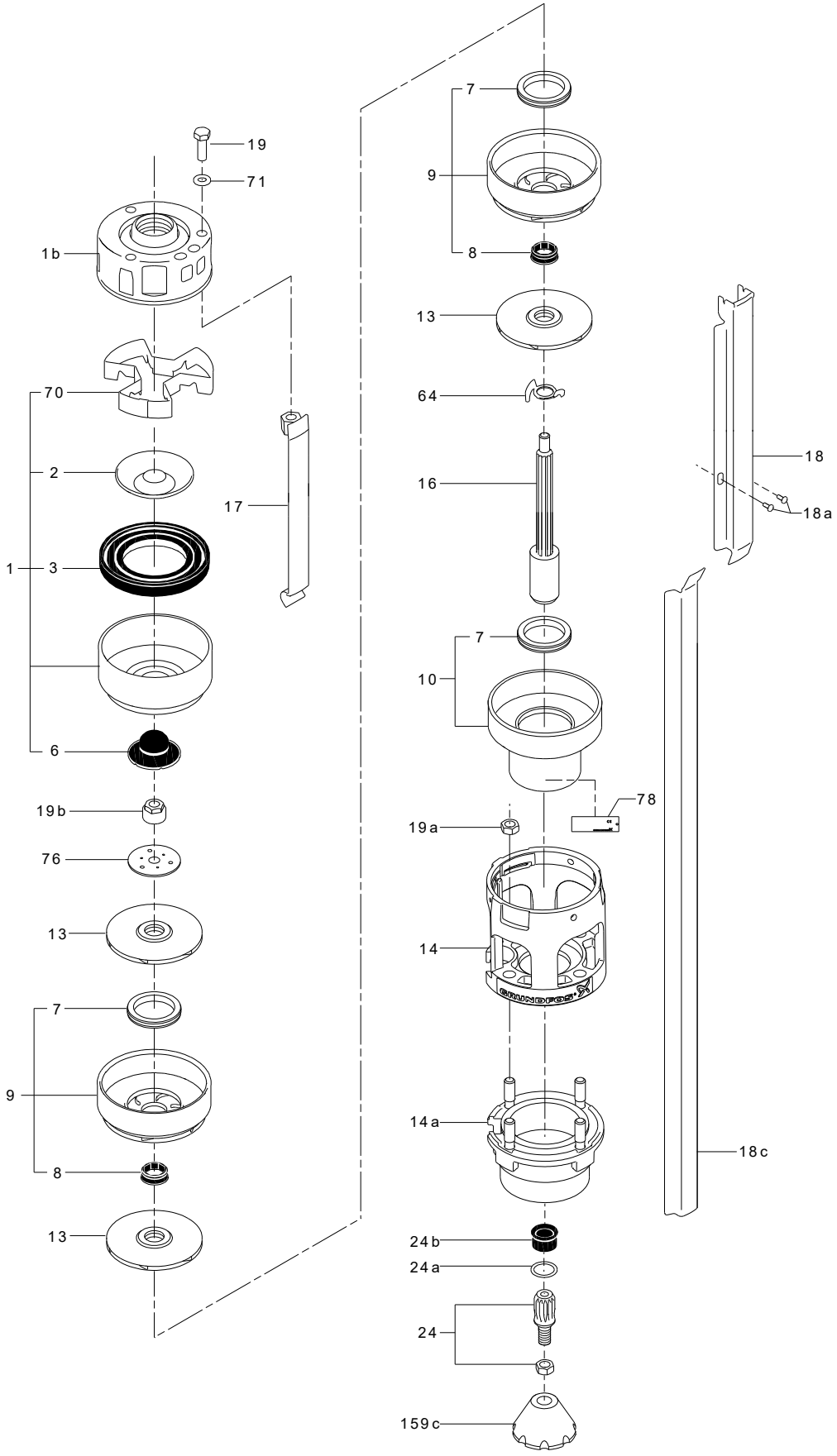

SQF 5A, 8A (N), 25, 40 SQF

Cable

Pos.	Description	*95027471*
220	Cable complete	1
250	Screw	4

Cable guard

Pos.	Description	25 SQF-3		25 SQF-6		25 SQF-7	
		SQF 5A-3	SQF 5A-3 N	SQF 5A-6	SQF 5A-6 N	SQF5A-7	SQF5A-7 N
		95048642	*95048643*	*95048644*	*95048645*	*95048647*	*95048649*
18	Cable guard	1	1	1	1	1	1
18b	Screw	2	-	2	-	2	-
18c	Cable guard	1	1	1	1	1	1

Pos.	Description	40 SQF-3		40 SQF-5	
		SQF 8A-3	SQF 8A-3 N	SQF 8A-5	SQF 8A-5 N
		95048646	*95048645*	*95048648*	*95048641*
18	Cable guard	1	1	1	1
18c	Cable guard	1	1	1	1

Connecting piece

Pos.	Description	*96773221*
14a	Connecting piece	1

Sand slinger

Pos.	Description	*96773222*
159c	Sand slinger	1

Shaft end

Pos.	Description	*96477039*
24	Shaft end complete	1
24a	Supporting ring	1
24b	Spline protector	1
-	Setting tool	1

Valve

Pos.	Description	SQF 5A	SQF 5A N	SQF 8A	SQF 8A N	25 SQF	40 SQF
		96550774	*085513*	*96550793*	*96550795*	*96550774*	*115110*
1	Valve casing complete	1	1	1	1	1	1

Wear parts

Pos.	Description	25 SQF-3		25 SQF-6		25 SQF-7	
		SQF 5A-3	SQF 5A-3 N	SQF 5A-6	SQF 5A-6 N	SQF 5A-7	SQF 5A-7 N
		96477032	*96477034*	*96477035*	*96477036*	*96867986*	*96867987*
7	Neck ring	3	3	6	6	7	7
8	Bearing	2	-	5	-	6	-
13	Impeller	3	3	6	6	7	7
19b	Nut	1	-	1	-	1	-
76	Washer	1	-	1	-	1	-
85	Stop ring	-	1	-	1	-	1

Pos.	Description	40 SQF-3		40 SQF-5	
		SQF 8A-3	SQF 8A-3 N	SQF 8A-5	SQF 8A-5 N
		96477037		*95048664*	
7	Neck ring	3	3	5	5
8	Bearing	2	2	4	4
13	Impeller	-	-	-	-
13a	Impeller complete	3	3	5	5

SQFlex 5A N and SQFlex 8A-3

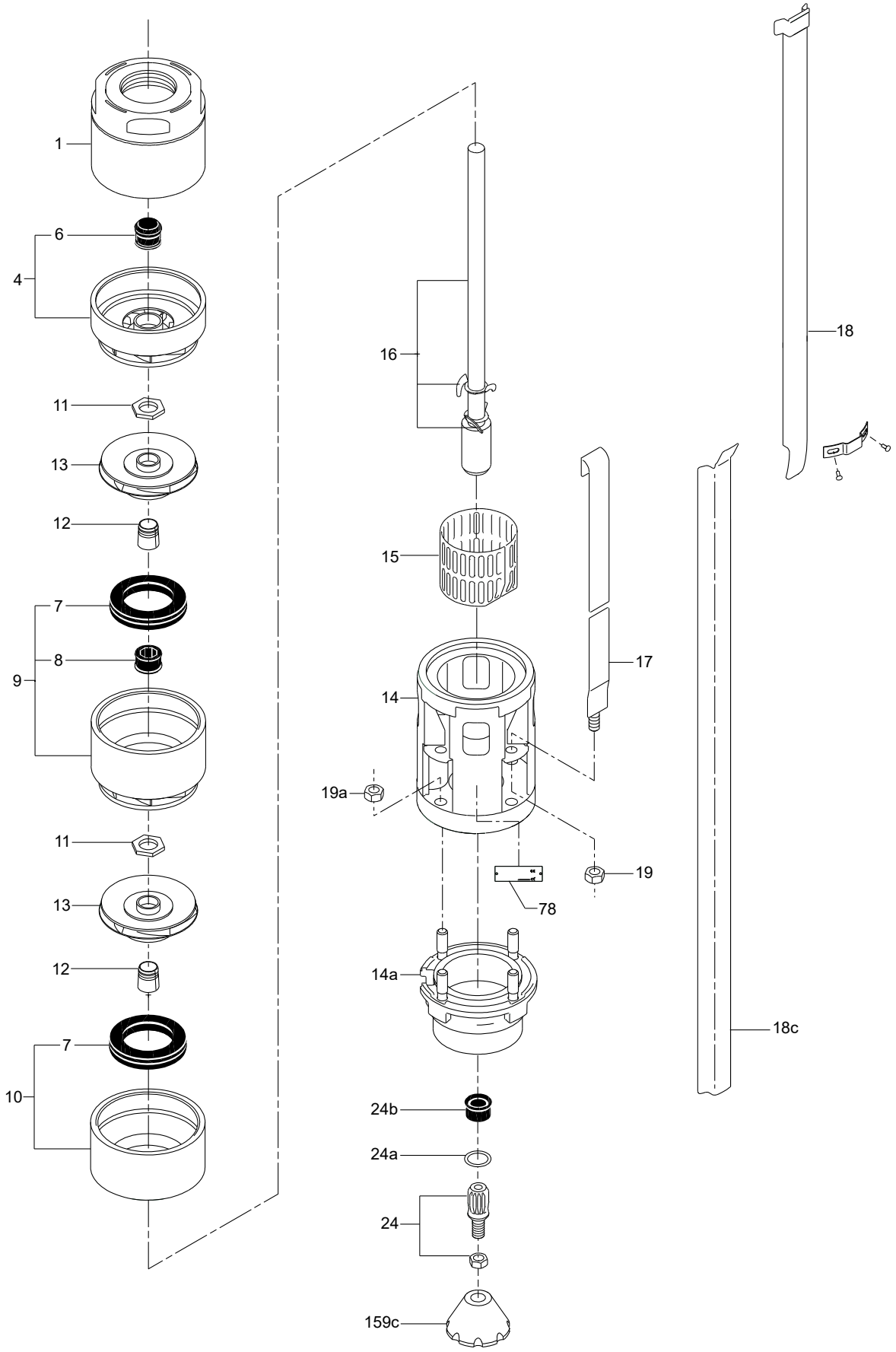

SQFlex 5A-3

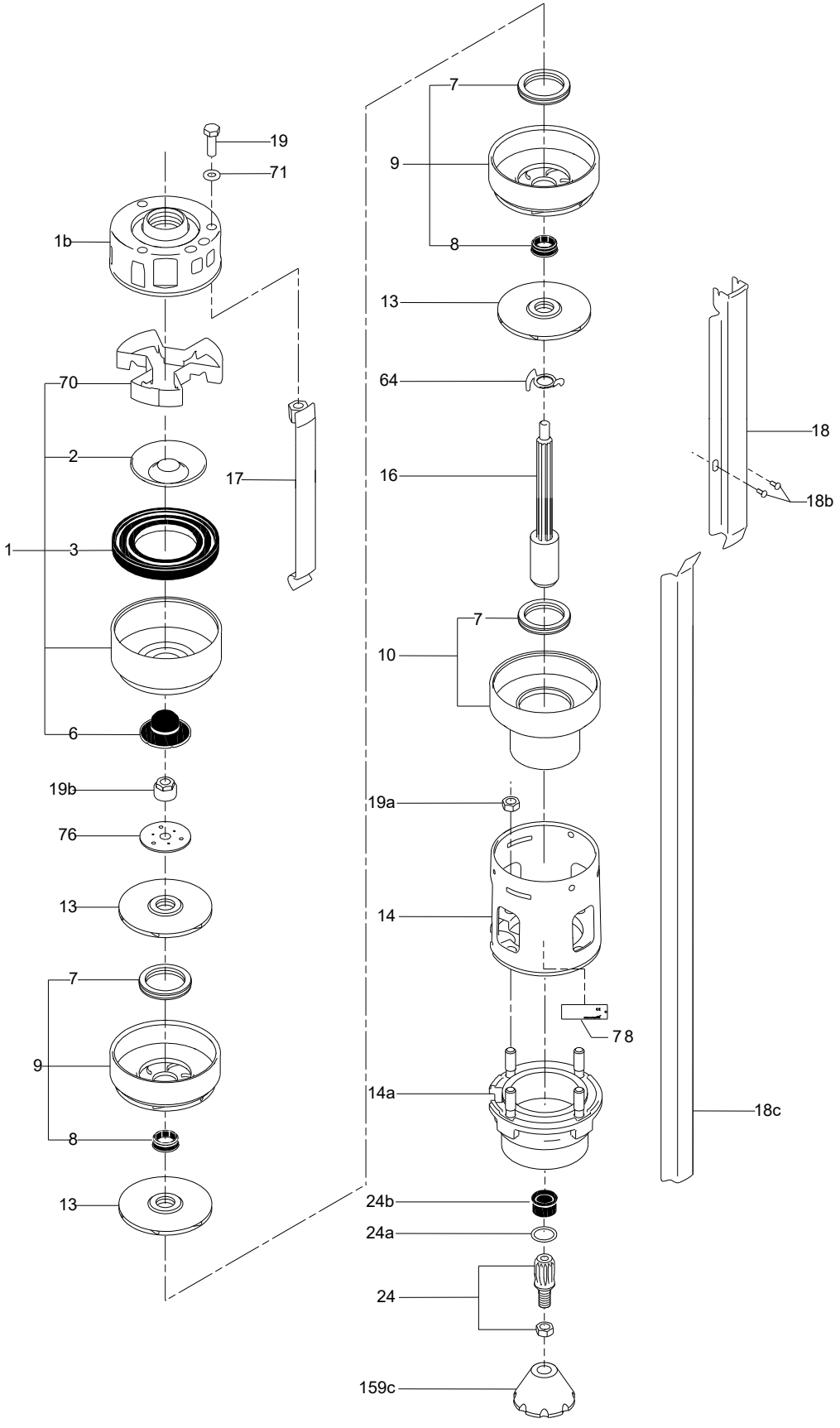
19
71
1b
70
2
17
1
3
6
19b
76
13
7
9
8
13
7
9
8
13
64
16
18
18b
7
10
19a
14
7 8
14a
18c
24b
24a
24
159c
TM022247

SQF 14A (N), 75 SQF

Cable

Pos.	Description	*95027471*
220	Cable complete	1
250	Screw	4

Cable guard

Pos.	Description	60 SQF-3	
		SQF 11A-3	SQF 11A-3 N
		95048650	*95048651*
18	Cable guard	1	1
18a	Screw	2	2
18c	Cable guard	1	1

Chamber

Pos.	Description	SQF 11A
		96477045
4	Chamber, top	1
9	Chamber with neck ring and bearing	2

Connecting piece

Pos.	Description	*96773221*
14a	Connecting piece	1

Sand slinger

Pos.	Description	*96773222*
159c	Sand slinger	1

Shaft end

Pos.	Description	SQF 11A
		96477039
24	Shaft with coupling	1
24a	Supporting ring	1
24b	Spline protector	1
	Setting tool	1

Valve casing

Pos.	Description	SQF 11A	SQF 11A N
		75013	*75506*
1	Valve casing complete	1	

Wear parts

Pos.	Description	SQF 11A	SQF 11A N
		95048665	
7	Neck ring	3	
8	Bearing ring	3	
13	Impeller	3	
85	Stop ring	1	

SQF 14A (N), 75 SQF

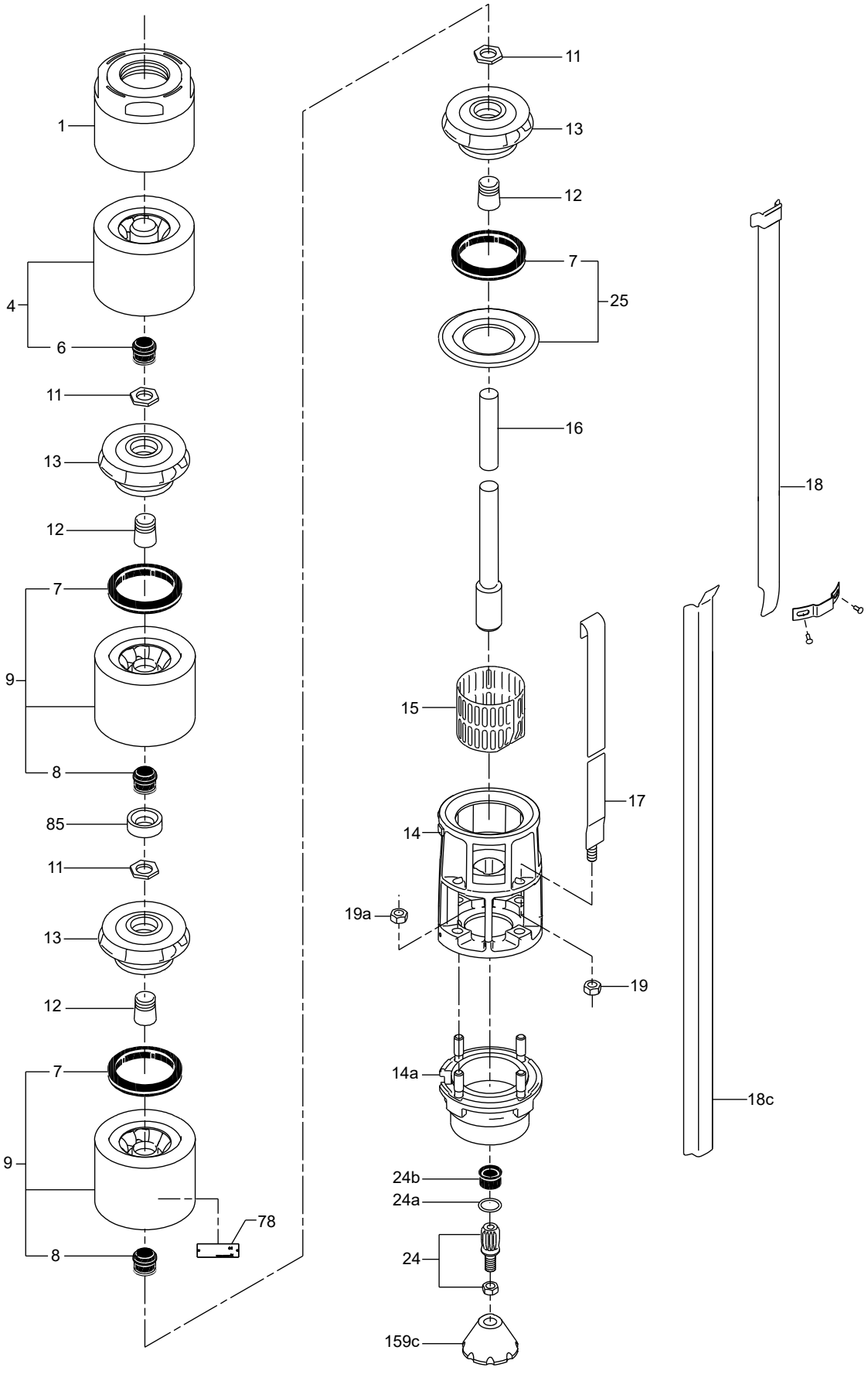

Cable

Pos.	Description	*95027471*
220	Cable complete	1
250	Screw	4

Cable guard

Pos.	Description	75 SQF-3	
		SQF 14A-3	SQF 14A-3 N
		95048650	*95048651*
18	Cable guard	1	1
18a	Screw	2	2
18c	Cable guard	1	1

Connecting piece

Pos.	Description	*96773221*
14a	Connecting piece	1

Sand slinger

Pos.	Description	*96773222*
159c	Sand slinger	1

Shaft end

Pos.	Description	*96477039*
24	Shaft end complete	1
24a	Supporting ring	1
24b	Spline protector	1
-	Setting tool	1

Valve

Pos.	Description	SQF 14A	SQF 14A-3 N	75 SQF
		96550708	*075506*	*075012*
1	Valve casing complete	1	1	1

Wear parts

Pos.	Description	75 SQF-3 SQF 14A-3 SQF 14A-3 N
		96477038
7	Neck ring	3
8	Bearing	3
13a	Impeller complete	3
85	Stop ring	1

SQF 14A (N), 75 SQF

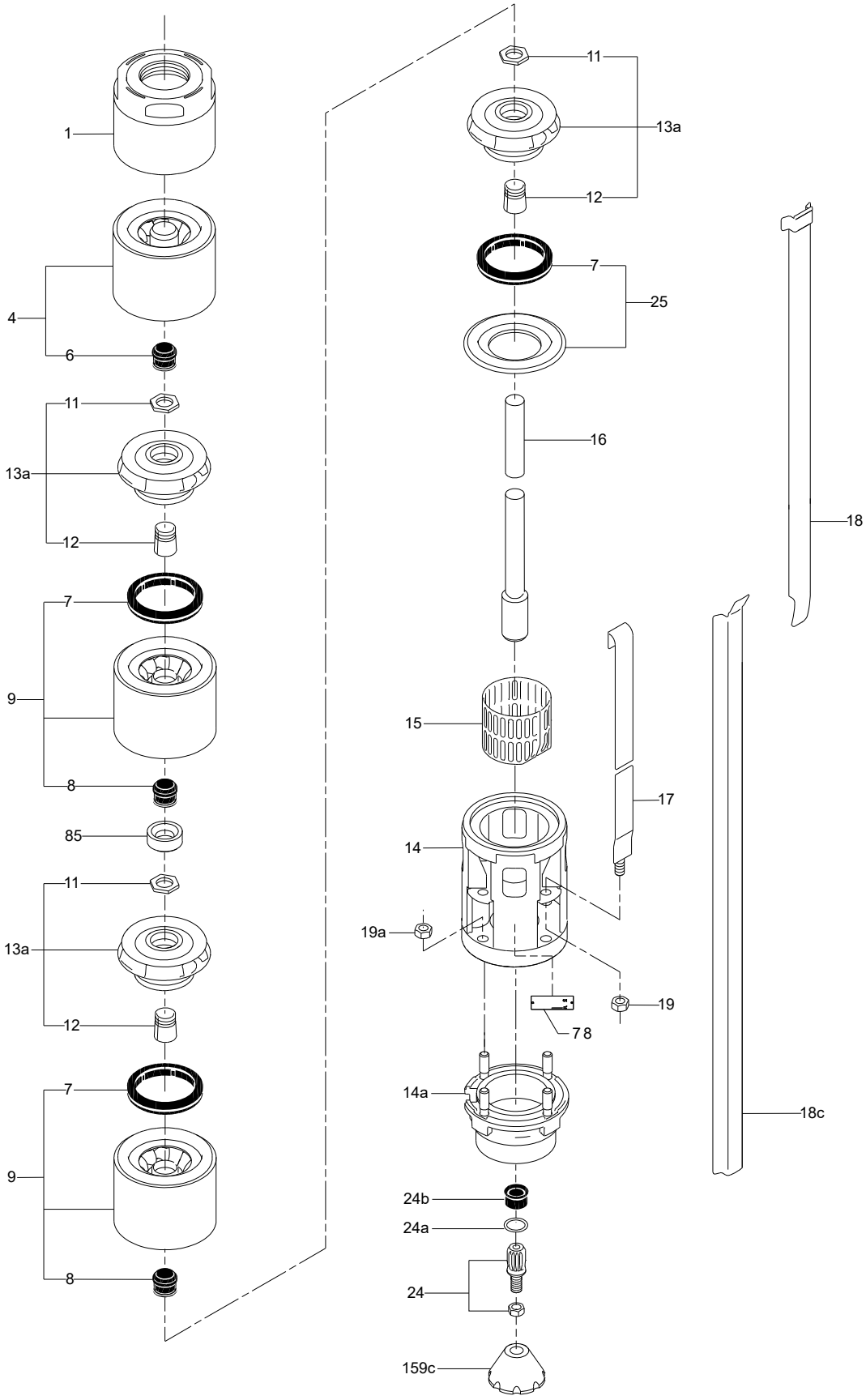

Helical

Cable

Pos.	Description	95027471
220	Cable complete	1
250	Screw	4

Cable guard

Pos.	Description	3 SQF-2		3 SQF-3		6 SQF-2	
		SQF 0.6-2	SQF 0.6-2 N	SQF 0.6-3	SQF 0.6-3 N	SQF 1.2-2	SQF 1.2-2 N
		95048652	95048653	95048654	95048655	95048656	95048657
18	Cable guard	1	1	1	1	1	1
18b	Screw	2	2	2	2	2	2

Pos.	Description	6 SQF-3		11 SQF-2	
		SQF 1.2-3	SQF 1.2-3 N	SQF 2.5-2	SQF 2.5-2 N
		96834830	96834831	95048658	95048659
18	Cable guard	1	1	1	1
18b	Screw	2	2	2	2

Discharge chamber

Pos.	Description	96477052
1	Valve casing complete	1
2	Valve cup ccomplete	1
7a	Retaining ring	1
70	Valve guide	1

Hydraulic parts

Pos.	Description	3 SQF-2		6 SQF-2		6 SQF-3	
		SQF 0.6-2	SQF 0.6-2 N	SQF 1.2-2	SQF 1.2-2 N	SQF 1.2-3	SQF 1.2-3 N
		96477054	96477055	96477056	96477057	96959822	96959823
6	Flange	1	1	1	1	1	1
9	Pump stator	1	1	1	1	1	1
13	Pump rotor	1	1	1	1	1	1

Pos.	Description	11 SQF-2		SQF-3	
		SQF 2.5-2	SQF 2.5-2 N	SQF 0.6-3	SQF 0.6-3N
		96477058	96477059	95048660	95048661
6	Flange	1	1	1	1
9	Pump stator	1	1	1	1
13	Pump rotor	1	1	1	1

Sand slinger

Pos.	Description	96773222
159c	Sand slinger	1

Torsion shaft

Pos.	Description	96477060
16	Torsion shaft	1

Screw

Pos.	Kit No	96037388
	Description	
18a	Screw K35 x 10 mm	2
18b	Screw M3 x 6 mm	2
250	Nut M4	4
250	Screw M4 x 8	4

Helical

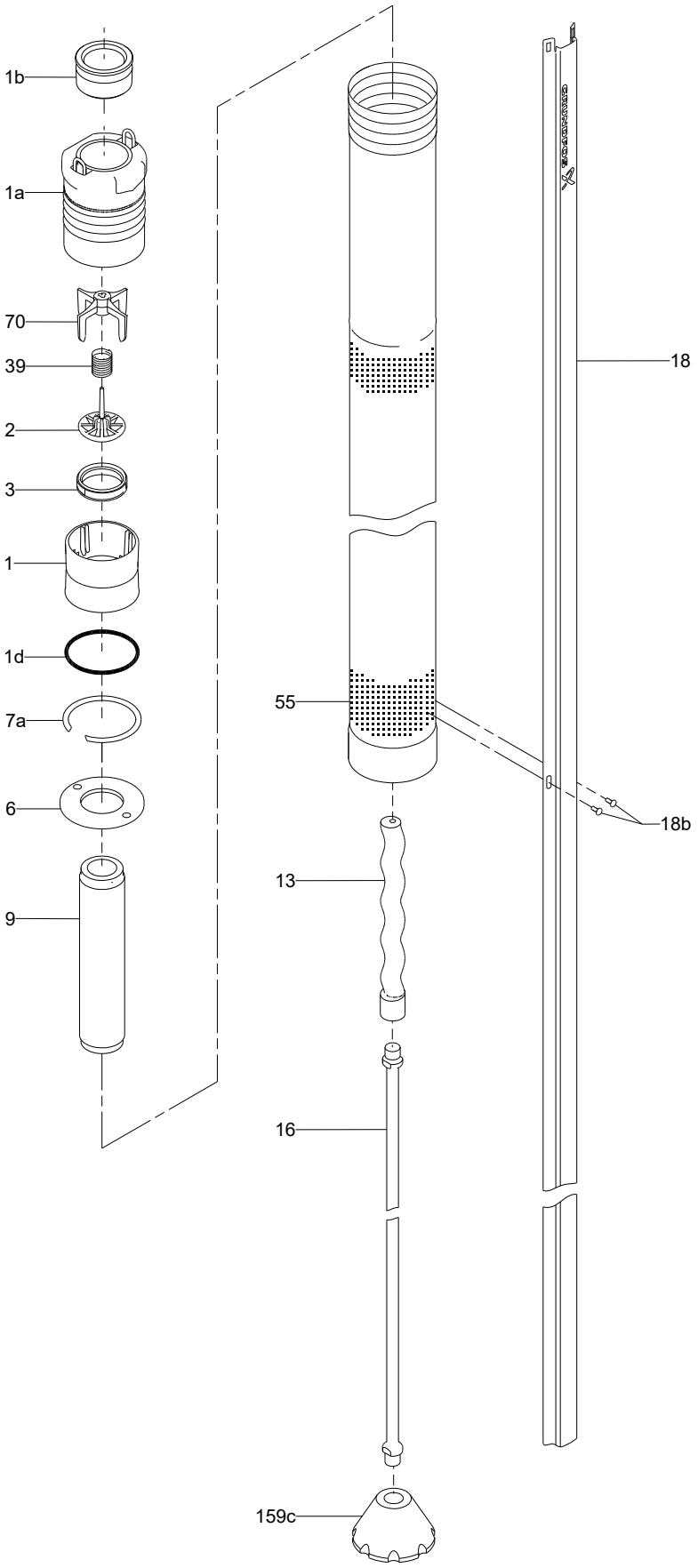

Motor

Bearings

Pos.	Kit No	96773223
	Description	
202a	Stop ring	1
202c	Shaft end	1
203	Thrust bearing, stationary	1
205	Bearing plate with radial bearing	1
206	Thrust bearing, rotating	1
222a	Filling plug	1
232	Shaft seal	1

Rotor

Pos.	Kit No	96773228
	Description	
202	Rotor	1

Thrust-bearing housing

Pos.	Kit No	96773224
	Description	
224	O-ring	1
243	Thrust-bearing housing	1

Top cover

Pos.	Kit No	96773227
	Description	
222a	Filling plug	1
224	O-ring	1
225	Top cover	1
232	Shaft seal	1

Motor

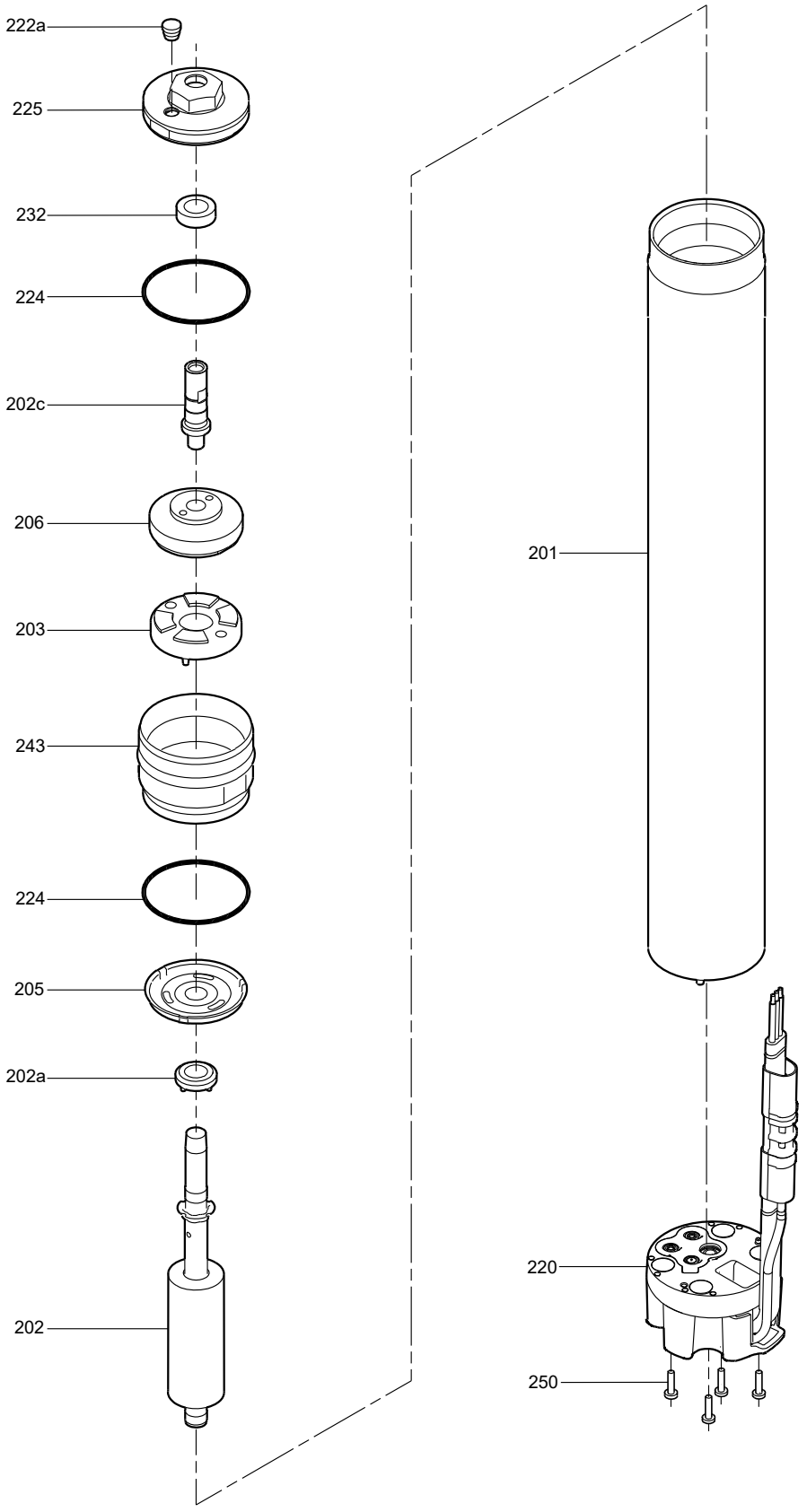
222a
225
232
224
202c
206
203
243
224
205
202a
202
201
220
250
TM022248

87. SRG

SRG.xx.30 and SRG.35.50 (50/60 Hz) - SRG.xx.12 and SRG.48.20 (60 Hz, North America)

Bearing, motor

Pos.	Description	95065458
1038	Compensation disc	1
1039	Ball bearing 6208.2RS1/C3	1
1047	Ball bearing 6010.2RS1/C3	1

Bearing, gearbox

Pos.	Description	95065459
1090	Slotted nut	1
1091	Lock washer	1
1092	Tapered roller bearing 30207	1
1094	Tapered roller bearing 30207	1

Cable (11G1.5)

Pos.	Description	95038410	95038411
1001	Cable	10m / 32 ft	15m / 49 ft
1026	Cable joint	6	6
1027	Cable joint	4	4
1030	Cable shoe	1	1

Cable entry, 1.5 mm^2

Pos.	Description	95065457
1003	Cable guide	1
1004	Cable sealing, large	1
1005	Thrust washer	1
1006	Cable sealing, small	1
1007	O-ring 39.45 x 2.62	1
1008	Cylinder head screw	2
1009	Cable relief	1
1025	O-ring 113.97 x 2.62	1
1026	Cable joint	10
1030	Cable shoe	1
-	Shrink hose for connectors	10

Gear housing

Note: Gear housing kit parts are pre-assembled.

Pos.	Description	95038404
1088	Gear housing	1
1089	Circlip	1
1090	Slotted nut	1
1091	Lock washer	1
1092	Tapered roller bearing 30207	1
1093	Gear shaft	1
1094	Tapered roller bearing 30207	1
1095	Intermediate ring	1
1101	Drain plug with magnet	1
1102	Plug	2
1105	Fit-in key	1
1119	PTFE tape	3

Radial seal

Pos.	Description	95039130
1022	O-ring 158.42 x 2.62	1
1104	Lip seal ∅85/105 x 13	2
1108	O-ring 85.0 x 2.5	1
	O-ring 105.0 x 3.0	1
	O-ring 184.0 x 3.0	1
1110	Washer ∅8.4/16 x 1.6 Ms	1
1157	Gasket NBR 70 ∅86/66 x 2	1
	Gasket NBR 70 96 x 75 x 2	1

Gasket kit

Pos.	Description	95065484
1004	Cable sealing, large	1
1006	Cable sealing, small	1
1007	O-ring 39.45 x 1.78	1
1022	O-ring 158.42 x 2.62	2
1025	O-ring 113.97 x 2.62	1
1037	O-ring 56.82 x 2.62	1
1048	Mechanical shaft seal, rotor	1
	Mechanical shaft seal, stator	1
1050	Shim washer	1
1051	Circlip	1
1108	O-ring 105.0 x 3.0	1
	O-ring 184.0 x 3.0	1

Shaft seal

Pos.	Description	95065462
1095	Intermediate ring	1
1098	Mechanical shaft seal, rotor	1
	Mechanical shaft seal, stator	1

Water-in oil sensor

Pos.	Description	95038409
1049	Water-in-oil sensor	1
1173	Seal washer	1

Wear ring

Pos.	Description	95037374
1022	O-ring 158.42 x 3.0	1
1097	Wear ring ceramic	1
1104	Lip seal ∅85/105 x 13	2
1108	O-ring 85.0 x 2.5	1
	O-ring 105.0 x 3.0	1
	O-ring 184.0 x 3.0	1
1110	Washer ∅8.4/16 x 1.6 Ms	1
1157	Gasket NBR 70 ∅86/66 x 2	1
	Gasket NBR 70 96 x 75 x 2	1

SRG.xx.30 and SRG.35.50 (50/60 Hz) - SRG.xx.12 and SRG.48.20 (60 Hz, North America)

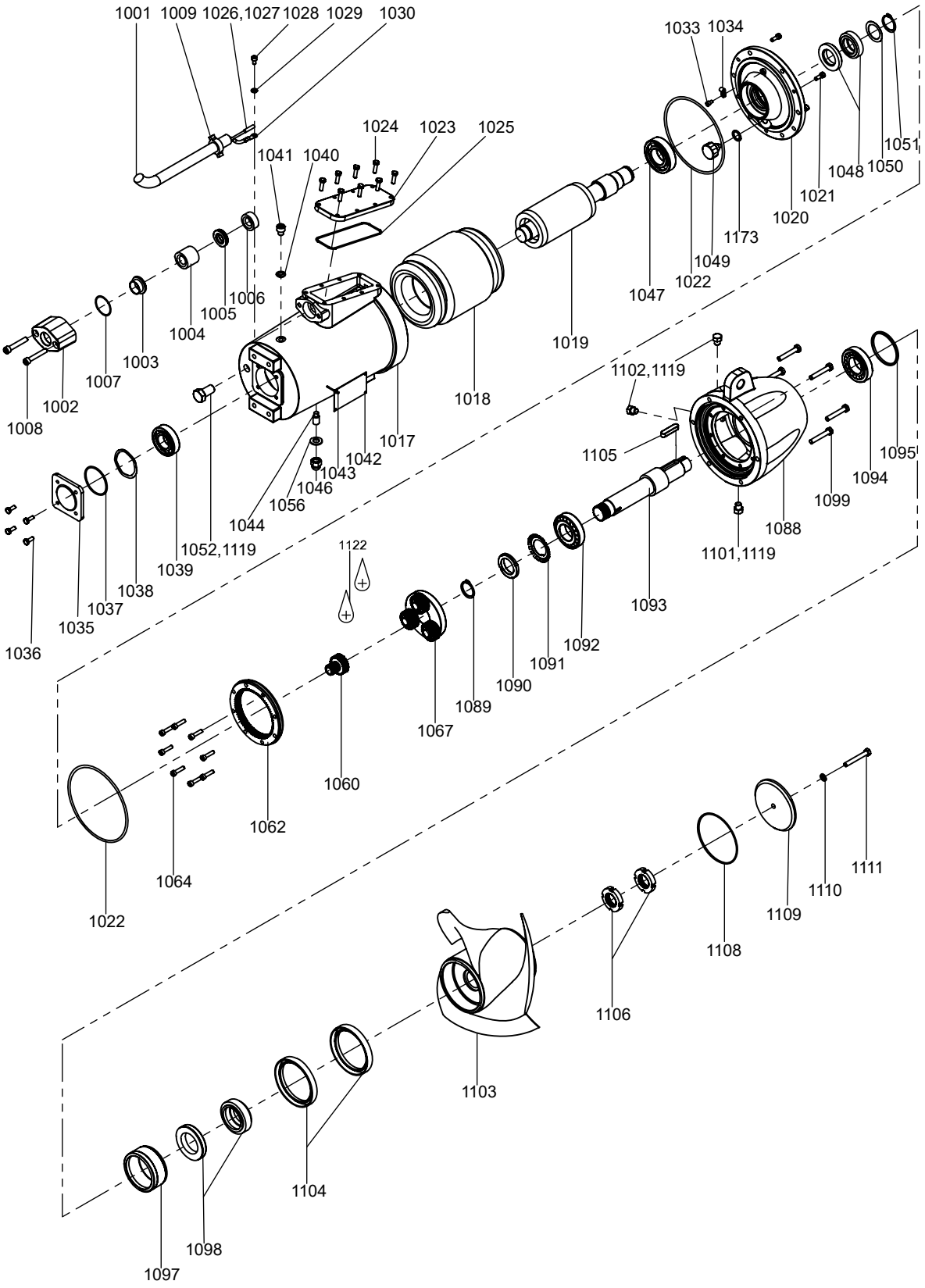

Gear

50 Hz	60 Hz SI	60 Hz US	i = 3.556	i = 3.875	i = 4.286	i = 4.833	i = 5.600	i = 6.750
SRG.08.30							95065509	
	SRG.08.30	SRG.11.12						95065523
SRG.10.30						95065510		
	SRG.11.30	SRG.15.12					95065509	
SRG.13.30					95065494			
	SRG.14/15.30	SRG.20.12				95065510		
SRG.16.30				95065512				
	SRG.18/19.30	SRG.26.12			95065494			
SRG.18.30			95065513					
	SRG.22/23.30	SRG.30.12		95065512				
SRG.30.30							95065509	
	SRG.30.30	SRG.40.12						95065523
SRG.40.30						95065510		
	SRG.40.30	SRG.55.12					95065509	
SRG.50.30					95065494			
	SRG.55.30	SRG.75.12				95065510		
SRG.60.30				95065512				
	SRG.70.30	SRG.95.12			95065494			
SRG.70.30			95065513					
	SRG.35.50	SRG.48.20						95065523
SRG.35.50							95065509	

Pos.	Description	95065513	95065512	95065494	95065510	95065509	65065523
1060	Sun wheel	1	1	1	1	1	1
1062	Ring gear	1	1	1	1	1	1
1067	Planet carrier complete	1	1	1	1	1	1

Impeller

Pos.	Description	50/60 Hz	SRG.08-23.30	SRG.30-70.30	SRG.35.50
		60 Hz US	SRG.11-30.12	SRG.40-95.12	SRG.48.20
		Kit No	95038677	95038678	95038696
1103	Impeller ∅300/∅35 8 °		1	-	-
	Impeller ∅300/∅35 25 °		-	1	-
	Impeller ∅500/∅35		-	-	1
1104	Lip seal ∅85/105 x 13		2	2	2
1105	Fit-in key		1	1	1
1106	Slotted nut		2	2	2
1108	O-ring 105.0 x 3.0		1	1	-
	O-ring 184.0 x 3.0		-	-	1
1109	Hub cover		1	1	1
1110	Washer ∅8.4/16 x 1.6 Ms		1	1	1
1111	Hexagon head screw		1	1	1

SRG.xx.30 and SRG.35.50 (50/60 Hz) - SRG.xx.12 and SRG.48.20 (60 Hz, North America)

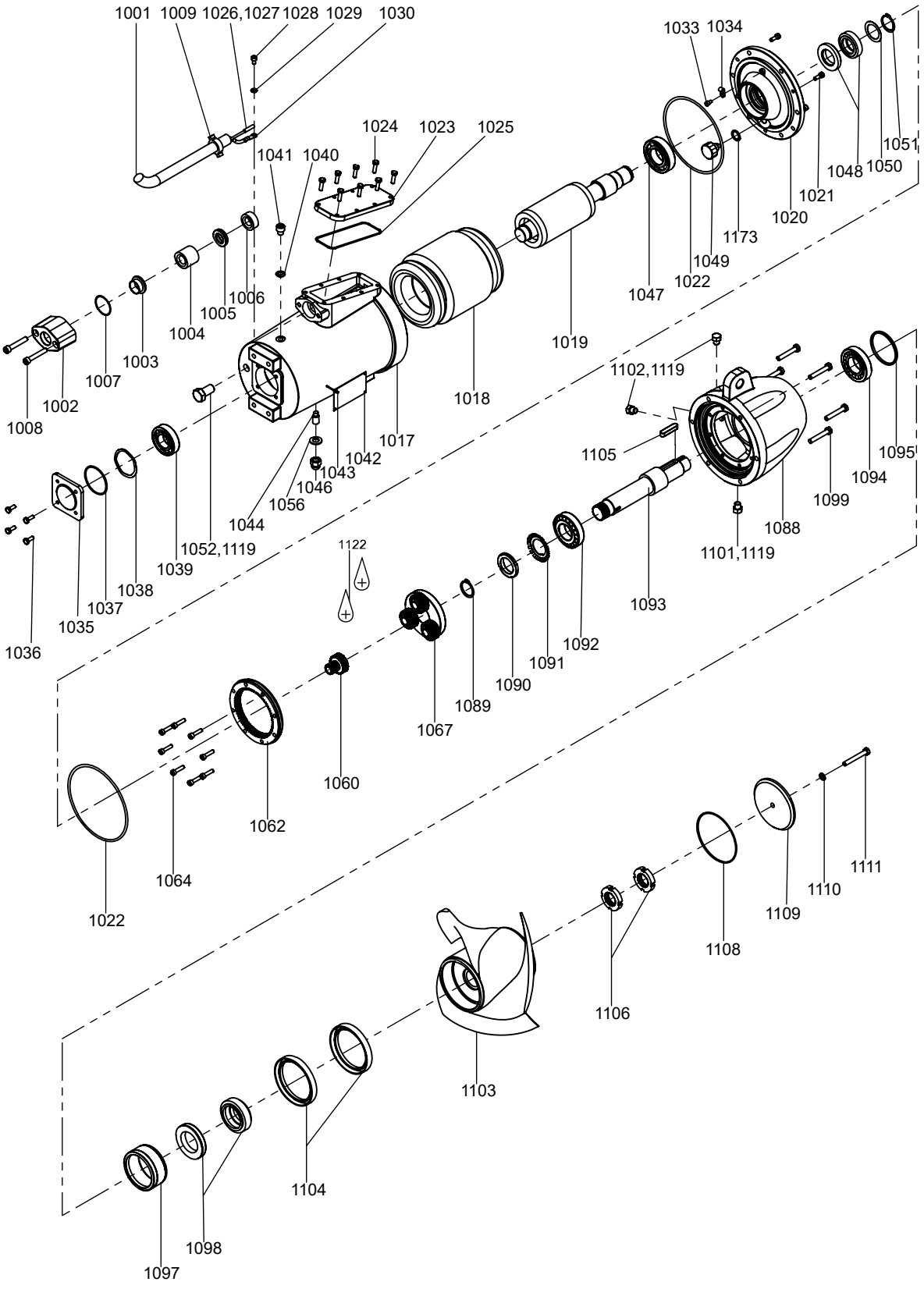

TM062752

Motor

Note: Motor kit parts are pre-assembled.

Pos.	Description	50/60 Hz	SRG.35.50	SRG.08-22.30	SRG.23-50.30	SRG.55-70.30
		60 Hz US	SRG.48.20	SRG.11-30.12	SRG.40-55.12	SRG.75-95.12
		Kit No	*95039701*	*95039705*	*95039706*	*95039738*
1002	Cable flange		1	1	1	1
1007	O-ring		1	1	1	1
1008	Cylinder head screw		2	2	2	2
1017	Motor housing		1	1	1	1
1018	Stator winded 4-pole 3.6 kW (4.8 hp)		1	-	-	-
	Stator winded 2-pole 2.2 kW (3.0 hp)		-	1	-	-
	Stator winded 2-pole 5.0 kW (6.7 hp)		-	-	1	-
	Stator winded 2-pole 7.0 kW (9.5 hp)		-	-	-	1
1019	Rotor with shaft 4-pole 3.6 kW (4.8 hp)		1	-	-	-
	Rotor with shaft 2-pole 2.2 kW (3.0 hp)		-	1	-	-
	Rotor with shaft 2-pole 5.0 kW (6.7 hp)		-	-	1	-
	Rotor with shaft 2-pole 7.0 kW (9.5 hp)		-	-	-	1
1020	Motor flange		1	1	1	1
1021	Cylinder head screw		3	3	3	3
1022	O-ring		2	2	2	2
1023	Terminal box cover		1	1	1	1
1024	Hexagon head screw		8	8	8	8
1025	O-ring		1	1	1	1
1028	Cylinder head screw		1	1	1	1
1029	Lock washer		1	1	1	1
1033	Cylinder head screw		1	1	1	1
1034	Cable clamp		1	1	1	1
1035	Bearing cover		1	1	1	1
1036	Hexagon head screw		4	4	4	4
1037	O-ring		1	1	1	1
1038	Compensation disc		1	1	1	1
1039	Ball bearing 6206.2RS1/C3		1	1	1	1
1040	U-washer		1	1	1	1
1041	Cylinder head screw		1	1	1	1
1044	Set screw		1	1	1	1
1046	Nut		1	1	1	1
1047	Ball bearing 6207.2RS1/C3		1	1	1	1
1048	Mechanical shaft seal , rotor		1	1	1	1
	Mechanical shaft seal , stator		1	1	1	1
1049	Water-in-oil sensor		1	1	1	1
1050	Shim washer		1	1	1	1
1051	Circlip		1	1	1	1
1052	Plug		1	1	1	1
1056	Seal washer		1	1	1	1
1173	Seal washer		1	1	1	1

SRG.xx.30 and SRG.35.50 (50/60 Hz) - SRG.xx.12 and SRG.48.20 (60 Hz, North America)

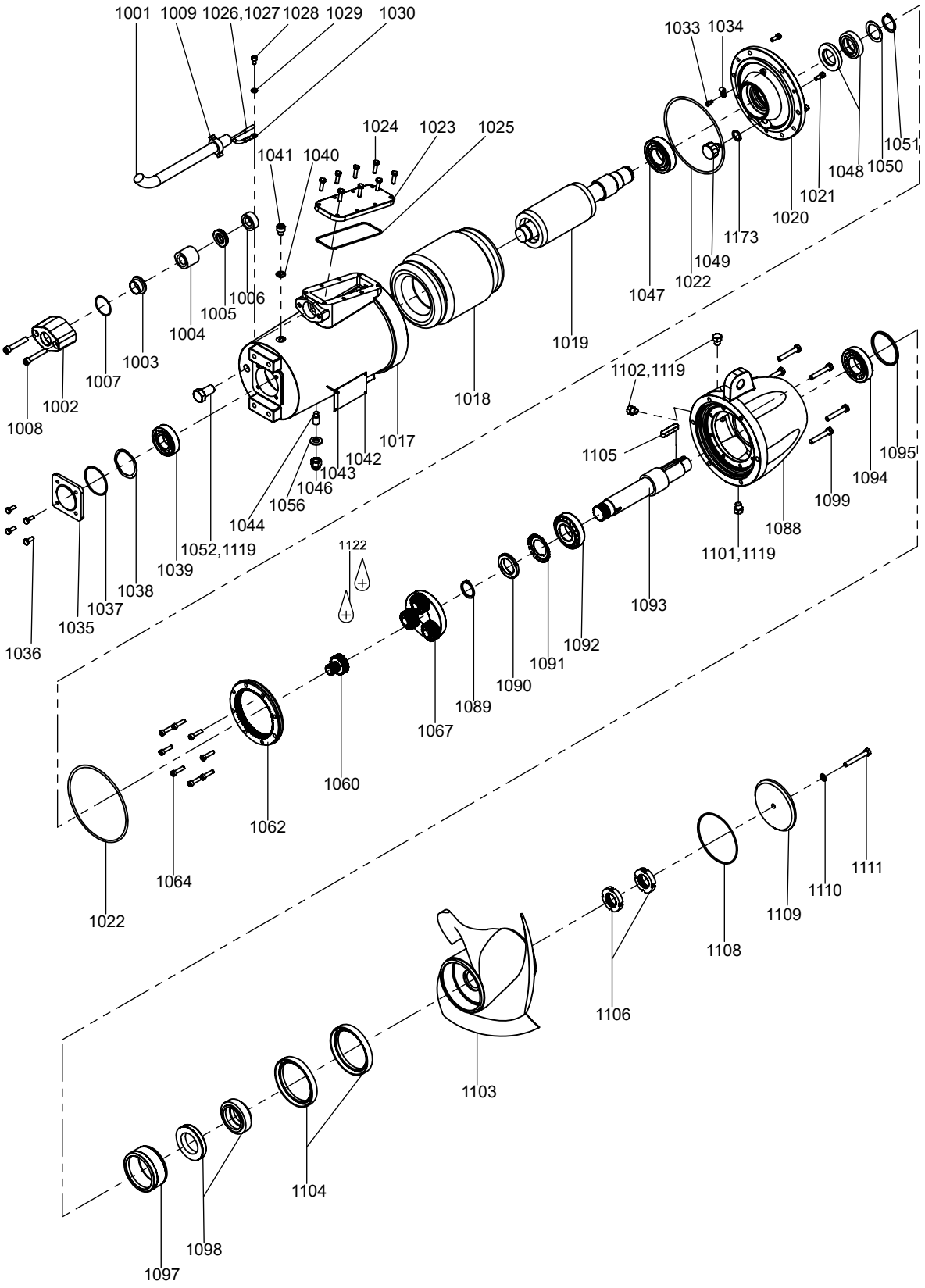

SRG.50 - 100.50/80 and SRG.130.80 (50 Hz), SRG.50 - 130.50/80 (60 Hz SI), SRG.68 - 175.20/32 (60 Hz, North America)

Note: The pump SRG.120.80.323.11.5.1B is not included in this mentioned range (this exception affects only this pump type in 50Hz version)

Bearing, motor

Pos.	Description	*96645955*
1038	Compensation disc	1
1039	Ball bearing SKF 6208.2RS1/C3 GJN	1
1047	Ball bearing SKF 6010.2RS1/C3 GJN	1

Bearing, gearbox

Pos.	Description	*95065467*
1090	Slotted nut	1
1092	Tapered roller bearing 30209	1
1094	Tapered roller bearing 32209	1

Cable (11G2.5)

Pos.	Description	*95038486*	*95038487*
1001	Cable	10 m / 32 ft	15 m / 49 ft
1026	Cable joint	6	6
1027	Cable joint	4	4
1030	Cable shoe	1	1

Cable entry, 2.5 mm^2

Pos.	Description	*95065465*
1003	Cable guide	1
1004	Cable sealing, large	1
1005	Thrust washer	1
1006	Cable sealing, small	1
1007	O-ring 54.0 x 3.0	1
1008	Cylinder head screw	2
1009	Cable relief	1
1025	O-ring 139.29 x 3.53	1
1026	Cable joint	10
1030	Cable shoe	7
-	Shrink hose for connectors	10

Gear housing

Note: Gear housing kit parts are pre-assembled.

Pos.	Description	*95038481*
1088	Gear housing	1
1089	Circlip	1
1090	Slotted nut	1
1092	Tapered roller bearing 30209	1
1093	Gear shaft	1
1094	Tapered roller bearing 32209	1
1101	Drain plug with magnet	1
1102	Plug	2
1105	Fit-in key	1
1119	PTFE tape	3

Impeller

Pos.	Description	50 Hz	SRG.50-100.50	SRG.70/100/130.80
		60 Hz SI	SRG.50-100.50	SRG.70-130.80
		60 Hz US	SRG.68-135.20	SRG.95-175.32
		Kit No	*95038701*	*95039707*
1103	Impeller ∅500/∅45		1	-
	Impeller ∅800/∅45		-	1
1104	Lip seal ∅100/120 x 12		2	2
1105	Fit-in key		1	1
1106	Slotted nut		2	2
1108	O-ring 184.0 x 3.0		1	-
	O-ring 225.0 x 3.0		-	1
1109	Hub cover		1	1
1110	Washer ∅10.5/20 x 2 Ms		1	1
1111	Hexagon head screw		1	1

Radial sealing

Pos.	Description	*95039131*
1022	O-ring 215.57 x 2.62	1
1104	Lip seal ∅100/120 x 12	2
1108	O-ring 94.92 x 2.62	1
	O-ring 184.0 x 3.0	1
	O-ring 225.0 x 3.0	1
1110	Washer ∅10.5/20 x 2.0	1
1157	Gasket 96 x 75 x 2	1

Gasket kit

Pos.	Description	*95065486*
1004	Cable sealing, large	1
1006	Cable sealing, small	1
1007	O-ring 54.0 x 3.0	1
1022	O-ring 215.57 x 2.62	2
1025	O-ring 139.29 x 3.53	1
1037	O-ring 75.87 x 2.62	1
1048	Mechanical shaft seal, rotor	1
	Mechanical shaft seal, stator	1
1050	Shim washer	1
1051	Circlip	1
1108	O-ring 225.0 x 3.0	1
	O-ring 184.0 x 3.0	1

Shaft seal

Pos.	Description	*95065470*
1098	Mechanical shaft seal, rotor	1
	Mechanical shaft seal, stator	1

Wear ring

Pos.	Description	*95037375*
1022	O-ring 215.57 x 2.62	1
1097	Wear ring ceramic	1
1104	Lip seal ∅100/120 x 12	2
1108	O-ring 94.92 x 2.62	1
	O-ring 184.0 x 3.0	1
	O-ring 225.0 x 3.0	1
1110	Washer ∅10.5/20 x 2 Ms	1
1157	Gasket NBR 70 96 x 75 x 2	1

Water-in oil sensor

Pos.	Description	95038409
1049	Water-in-oil sensor	1
1173	Seal washer	1

SRG.50 - 100.50/80 and SRG.130.80 (50 Hz), SRG.50 - 130.50/80 (60 Hz SI), SRG.68 - 175.20/32 (60 Hz, North America)

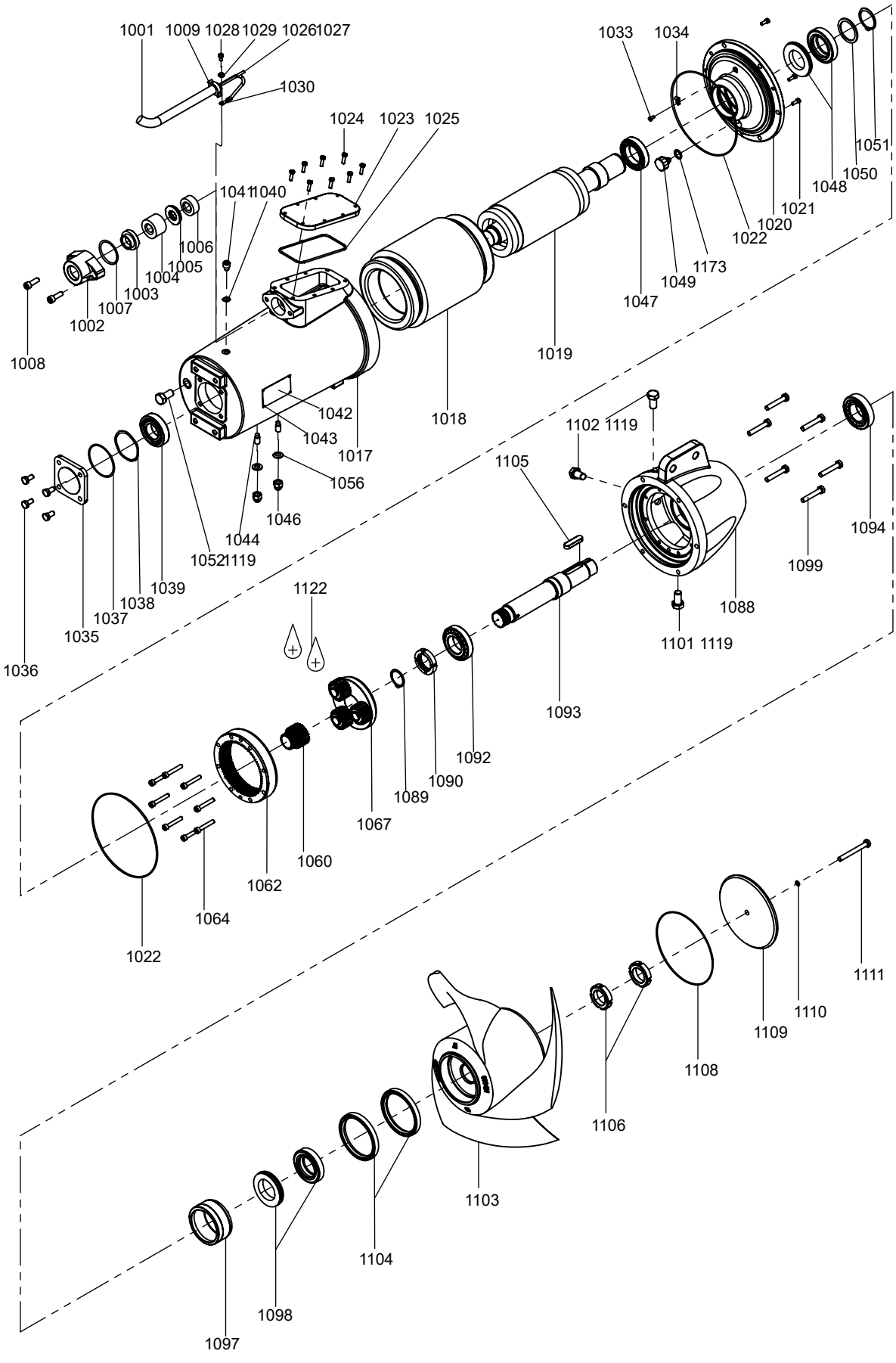

Gear

50 Hz	60 Hz SI	60 Hz US	i = 3.556	i = 3.875	i = 4.286	i = 4.833	i = 5.600	i = 6.750
SRG.50.50						95065518		
	SRG.50.50	SRG.68.20					95065517	
SRG.65.50					95065495			
	SRG.70.50	SRG.95.20				95065518		
SRG.80.50				95065515				
	SRG.100.50	SRG.135.20			95065495			
SRG.100.50			95065516					
	SRG.70.80	SRG.95.32						95065524
SRG.70.80	SRG.120.80	SRG.160.32					95065517	
SRG.100.80	SRG.130.80	SRG.175.32				95065518		
SRG.130.80.340					95065495			
SRG.130.80.375				95065515				

Pos.	Description	95065516	95065515	95065495	95065518	95065517	65065524
1060	Sun wheel	1	1	1	1	1	1
1062	Ring gear	1	1	1	1	1	1
1067	Planet carrier complete	1	1	1	1	1	1

Motor

Note: Motor kit parts are pre-assembled.

Pos.	Description	50 Hz	SRG.50-70.50 SRG.70.80	SRG.80-100.50 SRG.100/130.80
		60 Hz SI	SRG.50-70.50 SRG.70.80	SRG.100.50 SRG.120/130.80
		60 Hz US	SRG.68-95.20 SRG.95.32	SRG.135.20 SRG.160-175.32
		Kit No	*95039702*	*95039703*
1002	Cable flange		1	1
1007	O-ring		1	1
1008	Cylinder head screw		2	2
1017	Motor housing		1	1
1018	Stator winded 4 pole 7.0 kW (9.5 hp)		1	-
	Stator winded 4 pole 13.0 kW (17.5 hp)		-	1
1019	Rotor with shaft 4 pole 7.0 kW (9.5 hp)		1	-
	Rotor with shaft 4 pole 13.0 kW (17.5 hp)		-	1
1020	Motor flange		1	1
1021	Cylinder head screw		3	3
1022	O-ring		2	2
1023	Terminal box cover		1	1
1024	Hexagon head screw		8	8
1025	O-ring		1	1
1028	Cylinder head screw		1	1
1029	Lock washer		1	1
1033	Cylinder head screw		1	1
1034	Cable clamp		1	1
1035	Bearing cover		1	1
1036	Hexagon head screw		4	4
1037	O-ring		1	1
1038	Compensation disc		1	1
1039	Ball bearing 6208.2RS1/C3		1	1
1040	U-washer		1	1
1041	Cylinder head screw		1	1
1044	Set screw		2	2
1046	Nut		2	2
1047	Ball bearing 6010.2RS1/C3		1	1
1048	Mechanical shaft seal , rotor		1	1
	Mechanical shaft seal , stator		1	1
1049	Water-in-oil sensor		1	1
1050	Shim		1	1
1051	Circlip		1	1
1052	Plug		1	1
1056	Seal washer		2	2
1173	Seal washer		1	1

SRG.50 - 100.50/80 and SRG.130.80 (50 Hz), SRG.50 - 130.50/80 (60 Hz SI), SRG.68 - 175.20/32 (60 Hz, North America)

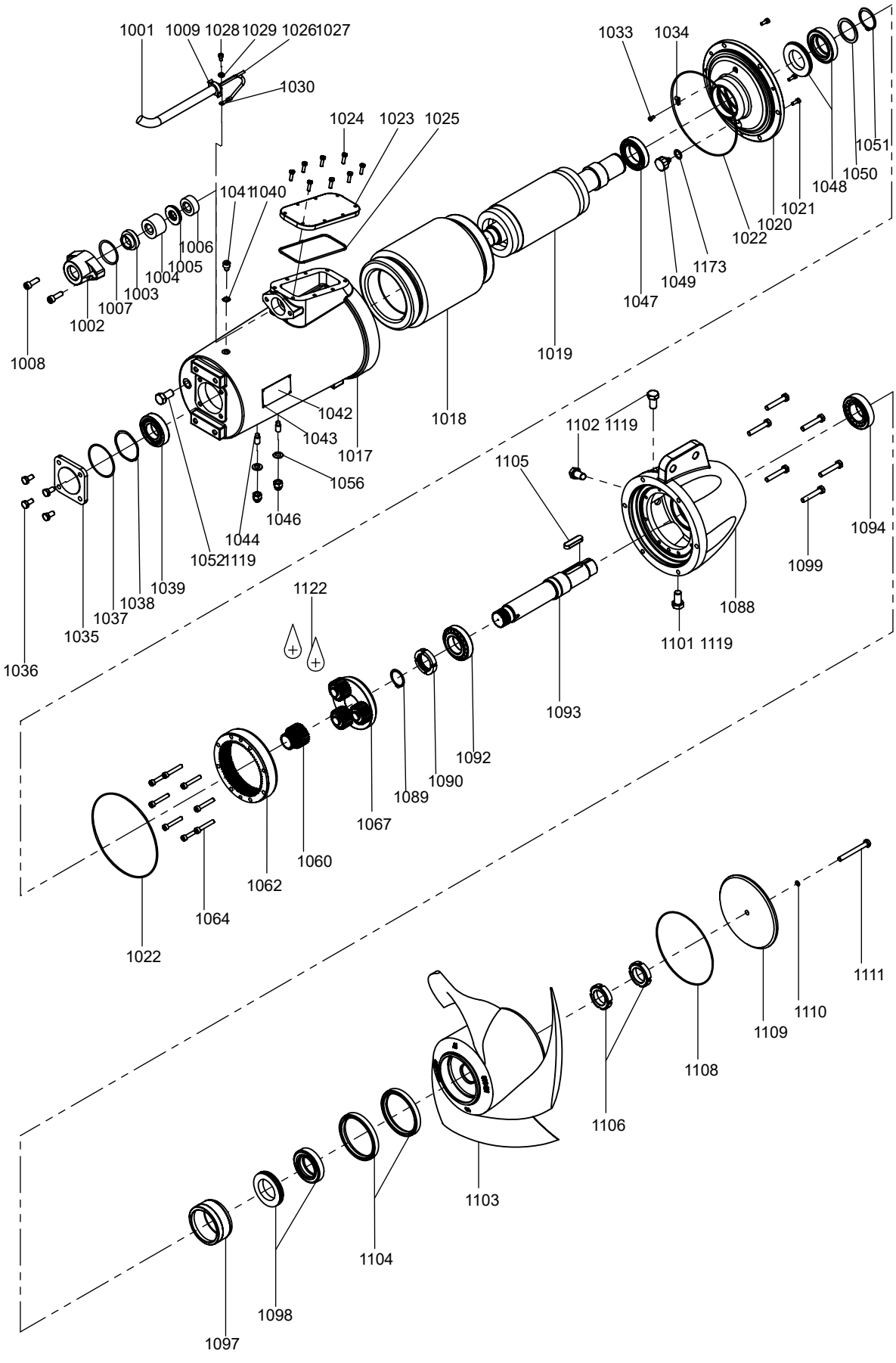

SRG.120.80.323.11.5.1B and SRG.150 - 240.80 (50/60 Hz) and SRG.200 - 320.32 (60 Hz North America)

Bearing, motor

Pos.	Description	95065474
1038	Compensation disc	1
1039	Ball bearing SKF 6210.2RS1/C3	1
1047	Ball bearing SKF 6210.2RS1/C3	1

Bearing, gearbox

Pos.	Description	95065475
1090	Slotted nut	1
1091	Lock washer	1
1092	Tapered roller bearing 30212	1
1094	Tapered roller bearing 33212	1

Cable (7G4+4x1.0)

Pos.	Description	95038520	98038521
1001	Cable	10 m / 32 ft	15 m / 49 ft
1026	Cable joint	6	6
1027	Cable joint	4	4
1030	Cable shoe	1	1

Cable entry, 4.0 mm^2

Pos.	Description	95065473
1003	Cable guide	1
1004	Cable sealing, large	1
1005	Thrust washer	1
1006	Cable sealing, small	1
1007	O-ring 54.0 x 3.0	1
1008	Cylinder head screw	2
1009	Cable relief	1
1025	O-ring 139.29 x 3.53	1
1026	Cable joint	6
1027	Cable joint	4
1030	Cable shoe	7
-	Shrink hose for connectors	10

Gear housing

Note: Gear housing kit part are pre-assembled.

Pos.	Description	95038516
1088	Gear housing	1
1090	Slotted nut	1
1091	Lock washer	1
1092	Tapered roller bearing 30212	1
1093	Gear shaft	1
1094	Tapered roller bearing 33212	1
1095	Intermediate ring	1
1101	Drain plug with magnet	1
1102	Plug	2
1105	Fit-in key	1
1119	PTFE tape	3

Impeller

Pos.	Description	95038710
1103	Impeller ∅800/∅55	1
1104	Lip seal	2
1105	Fit-in key	1
1106	Slotted nut	2
1108	O-ring 225.0 x 3.0	1
1109	Hub cover	1
1110	Washer ∅13/24 x 2.5	1
1111	Hexagon head screw	1

Radial seal

Pos.	Description	95039132
1022	O-ring 253.59 x 3.53	1
1104	Lip seal ∅125/150 x 12	2
1108	O-ring 94.92 x 2.62	1
	O-ring 120.24 x 3.53	1
	O-ring 225.0 x 3.0	1
1110	Washer ∅13/24 x 2.5	1

Gasket kit

Pos.	Description	95065489
1004	Cable sealing, large	1
1006	Cable sealing, small	1
1007	O-ring 54.0 x 3.0	1
1022	O-ring 253.59 x 3.53	2
1025	O-ring 139.29 x 3.53	1
1037	O-ring 91.67 x 3.53	1
1048	Mechanical shaft seal, rotor	1
	Mechanical shaft seal, stator	1
1050	Shim	1
1051	Circlip	1
1108	O-ring 225.0 x 3.0	1

Shaft seal

Pos.	Description	95065478
1095	Intermediate ring	1
1098	Mechanical shaft seal, rotor	1
	Mechanical shaft seal, stator	1

Water-in oil sensor

Pos.	Description	95038409
1049	Water-in-oil sensor	1
1173	Seal washer	1

Wear ring

Pos.	Description	95037376
1022	O-ring 253.59 x 3.53	1
1097	Wear ring ceramic	1
1104	Lip seal ∅125/150 x 12	2
1108	O-ring 94.92 x 2.62	1
	O-ring 120.24 x 3.53	1
	O-ring 225.0 x 3.0	1
1110	Washer ∅13/24 x 2.5	1

SRG.120.80.323.11.5.1B and SRG.150 - 240.80 (50/60 Hz) and SRG.200 - 320.32 (60 Hz North America)

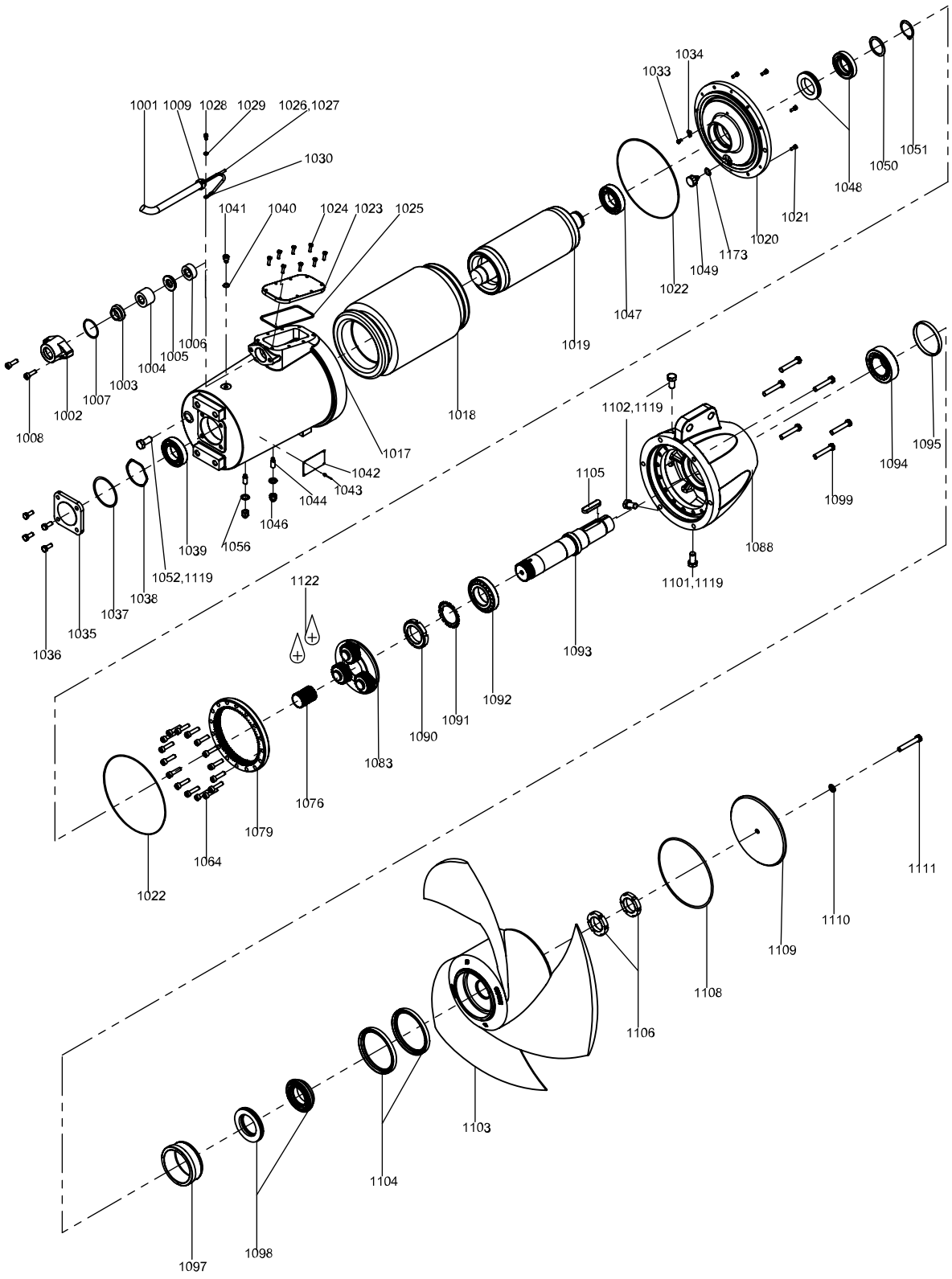

TM062751

Gear

50 Hz	60 Hz SI	60 Hz US	i = 3.500	i = 3.778	i = 4.125	i = 4.571	i = 5.167
SRG.120.80						*95038611*	
	SRG.150.80	SRG.200.32					*95065525*
SRG.160.80					*95065496*		
	SRG.180.80.381					*95038611*	
SRG.200.80				*95065521*			
	SRG.180.80.422				*95065496*		
SRG.240.80			*95065522*				
	SRG.200.80	SRG.270.32				*95038611*	
	SRG.240.80	SRG.320.32			*95065496*		

Pos.	Description	*95065522*	*95065521*	*65065496*	*95038611*	*95065525*
1076	Sun wheel	1	1	1	1	1
1079	Ring gear	1	1	1	1	1
1083	Planet carrier complete	1	1	1	1	1

Motor

Note: Motor kit parts are pre-assembled.

Pos.	Description	50Hz	SRG.120.80.323.11.5.1B
		50/60Hz	SRG.150-240.80
		60Hz US	SRG.200-320.32
		Kit No	*95039704*
1002	Cable flange		1
1007	O-ring		1
1008	Cylinder head screw		2
1017	Motor housing		1
1018	Stator winded 4-pole 24.0 kW (32.2 hp)		1
1019	Rotor with shaft 4-pole 24.0 kW (32.2 hp)		1
1020	Motor flange		1
1021	Cylinder head screw		6
1022	O-ring		2
1023	Terminal box cover		1
1024	Hexagon head screw		8
1025	O-ring		1
1028	Cylinder head screw		1
1029	Lock washer		1
1033	Cylinder head screw		1
1034	Cable clamp		1

Pos.	Description	50Hz	SRG.120.80.323.11.5.1B
		50/60Hz	SRG.150-240.80
		60Hz US	SRG.200-320.32
		Kit No	*95039704*
1035	Bearing cover		1
1036	Hexagon head screw		4
1037	O-ring		1
1038	Compensation disc		1
1039	Ball bearing 6210.2RS1/C3		1
1040	U-Washer		1
1041	Cylinder head screw		1
1044	Set screw		2
1046	Nut		2
1047	Ball bearing SKF 6210.2RS1/C3		1
1048	Mechanical shaft seal , rotor		1
	Mechanical shaft seal , stator		1
1049	Water-in-oil sensor		1
1050	Shim		1
1051	Retaining ring A 50		1
1052	Plug		1
1056	Seal washer		2
1119	PTFE tape		1
1173	Seal washer		1

SRG.120.80.323.11.5.1B and SRG.150 - 240.80 (50/60 Hz) and SRG.200 - 320.32 (60 Hz North America)

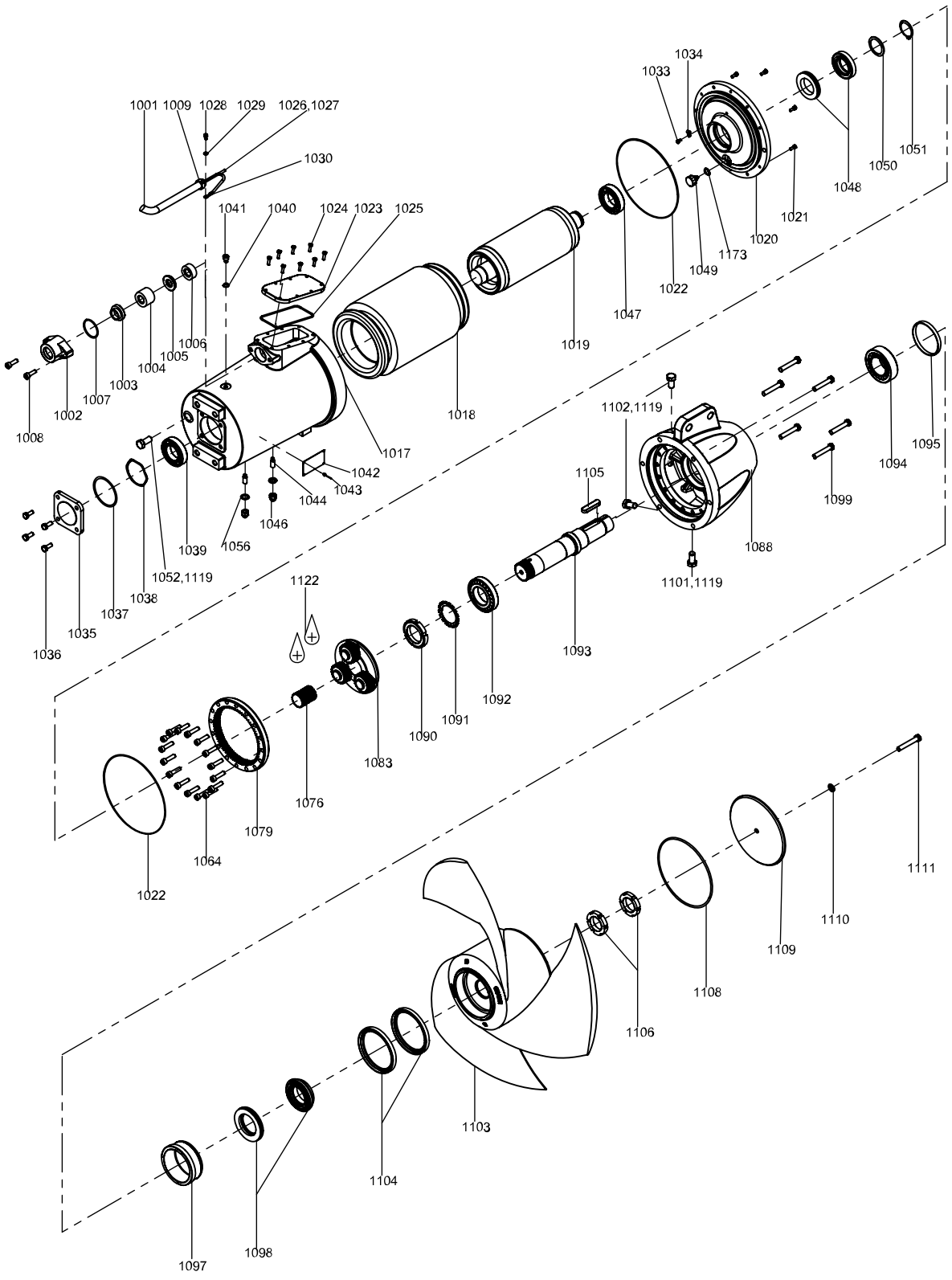

88. SRP

Impeller diameter 30/12

SRP.08.30 - SRP.70.30 (50/60 Hz), SRP.11.12 - SRP.95.12 (60 Hz, North America)1060

Bearing, motor

Pos.	Description	Dimensions	95065458
1038	Compensation disc	51 x 61	1
1039	Ball bearing SKF 6206.2RS1/C3 GJN	30 x 62 x 16	1
1047	Ball bearing SKF 6207.2RS1/C3 GJN	35 x 72 x 17	1

Bearing, gearbox

Pos.	Description	Dimensions	95065459
1090	Slotted nut KM7	M35 x 1.5	1
1091	Lock washer MB7	∅35	1
1092	Tapered roller bearing 30207	35 x 72 x 18.25	1
1094	Tapered roller bearing 30207	35 x 72 x 18.25	1

Cable entry, 1.5 mm^2

Pos.	Description	Dimensions	95065457
1003	Cable guide MD50		1
1004	Cable sealing large MD50	∅35.5/∅17.3 x 31	1
1005	Thrust washer MD50		1
1006	Cable sealing small MD50	∅34/∅17.3 x 13.5	1
1007	O-ring	1.78 x 37.82	1
1008	Cylinder head screw	M8 x 50	2
1009	Cable relief	∅20	1
1025	O-ring	2.62 x 113.97	1
1026	Cable joint	1.5 mm^2	6
1027	Cable joint	1.5 mm^2	4
1030	Cable shoe	1.5 mm^2/M6	1
-	Shrink hose for connectors		10

Gear casing

Pos.	Description	Dimensions	95038404
1088	Gear casing MD50		1
1089	Retaining ring A 32		1
1090	Slotted nut KM7	M35 x 1.5	1
1091	Lock washer MB7	∅35	1
1092	Tapered roller bearing 30207	35 x 72 x 18.25	1
1093	Gear shaft MD50		1
1094	Tapered roller bearing 30207	35 x 72 x 18.25	1
1101	Drain plug with magnet	1/4" Gas	1
1102	Plug	1/4" Gas	2
1119	PTFE tape		1

Radial seal

Pos.	Description	Dimensions	95065461*	95039130
1096	Speedy Sleeve	∅85 mm	1	-
1104	Lip seal	85 x 105 x 13	2	2
1108	O-ring	2.5 x 85.0	1	1
1108	O-ring	3.0 x 105.0	1	1
1108	O-ring	3.0 x 184.0	1	1
1110	Washer	∅8.4 x 16 x 1.6	-	1
1157	Gasket	96 x 75 x 2	1	1

* Suitable for wear ring without ceramic (old version).

Seal kit

Pos.	Description		95065484
1004	Cable sealing large MD50	∅35.5/∅17.3 x 31	1
1006	Cable sealing small MD50	∅34/∅17.3 x 13.5	1
1007	O-ring	1.78 x 37.82	1
1022	O-ring	2.62 x 158.42	2
1025	O-ring	2.62 x 113.97	1
1037	O-ring	2.62 x 56.82	1
1048	Mechanical shaft seal	∅32	1
1050	Shim	32 x 45 x 0.5	1
1051	Retaining ring A32		1
1108	O-ring	3.0 x 105.0	1

Shaft seal

Pos.	Description	Description	95065462
1095	Intermediate ring	∅72/67 x 4	1
1098	Mechanical shaft seal	∅45	1

Slotted nut

Pos.	Description	Dimensions	95038413
1106	Slotted nut KM6	M30 x 1.5	2
1107	Lock washer MB6	∅30	2

Water-in oil sensor

Pos.	Description	Dimensions	95038409
1049	Water-in-oil sensor		1
1173	Seal washer	17 x 23 x 1.5	1

Wear ring

Pos.	Description	Dimensions	Standard 95037374
1097	Wear ring ceramic	∅85 mm	1
1104	Lip seal	85 x 105 x 13	2
1108	O-ring	2.5 x 85.0	1
	O-ring	3.0 x 105.0	1
	O-ring	3.0 x 184.0	1
1157	Gasket	96 x 75 x 2	1

SRP.08.30 - SRP.70.30 (50/60 Hz), SRP.11.12 - SRP.95.12 (60 Hz, North America)

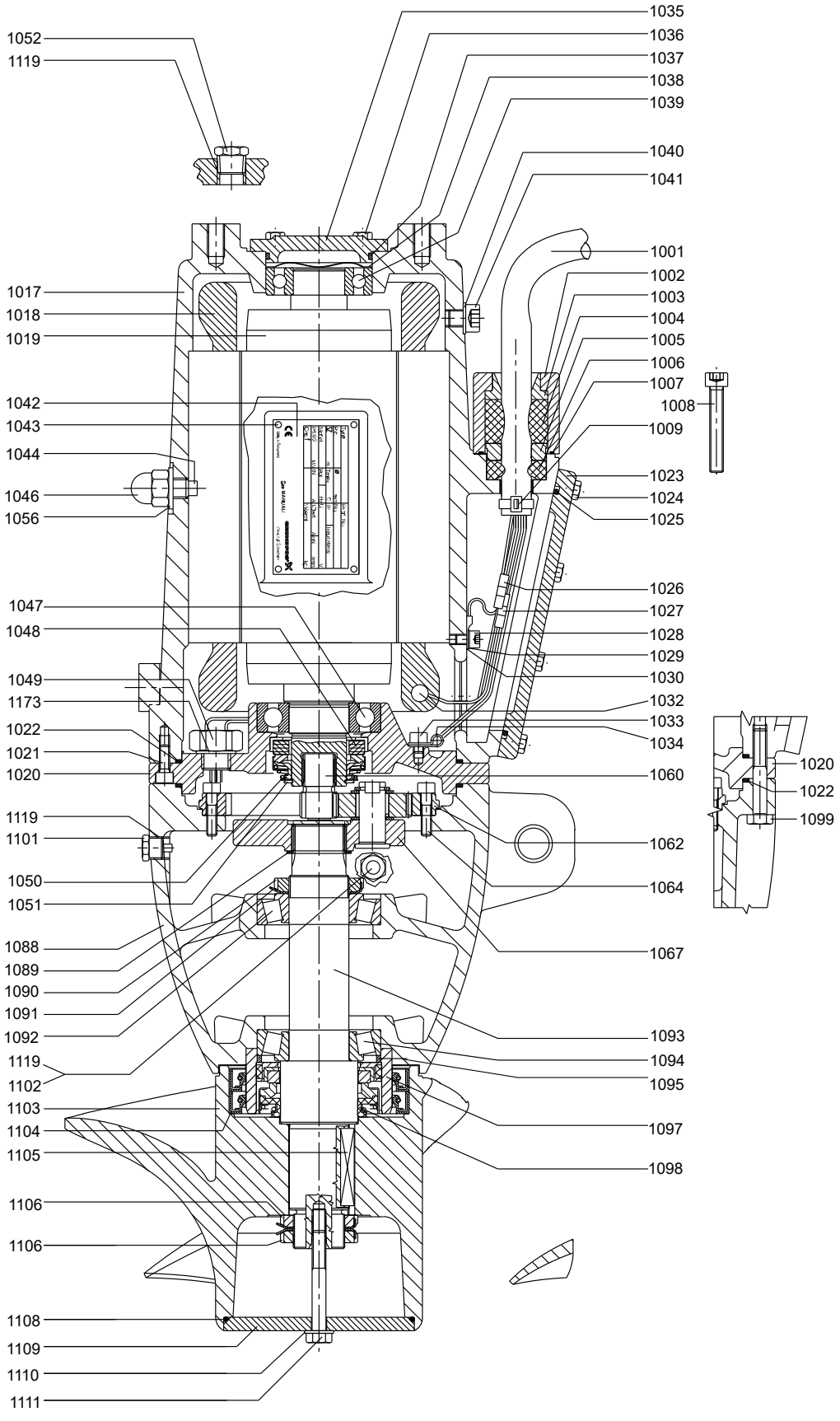

Cable

Pos.	Description	Dimensions	95038410	95038411	95038412
1001	Cable	12 x 1.5 mm^2 ∅17.3	10m / 30 ft	15m / 50 ft	25m / 80 ft
1026	Cable joint	1.5 mm^2	6	6	6
1027	Cable joint	1.5 mm^2	4	4	4
1030	Cable shoe	1.5 mm^2/M6	1	1	1

Gear

Pos.	Description							
		50 Hz	SRP.08.30 SRP.30.30	-	SRP.10.30 SRP.40.30	SRP.13.30 SRP.50.30	SRP.16.30 SRP.60.30	SRP.18.30 SRP.70.30
		60 Hz SI	SRP.11.30 SRP.40.30	SRP.08.30 SRP.30.30	SRP.14.30 SRP.55.30	SRP.18.30 SRP.70.30	SRP.23.30	-
		60 Hz US	SRP.15.12 SRP.55.12	SRP.11.12 SRP.40.12	SRP.19.12 SRP.75.12	SRP.26.12 SRP.95.12	SRP.30.12	-
		Kit No	95065509	95065523	95065510	95065494	95065512	95065513
1060	Sun wheel PG50 Z=15 i = 5.6		1	-	-	-	-	-
	Sun wheel PG50 Z=18 i = 4.83		-	-	1	-	-	-
	Sun wheel PG50 Z=21 i = 4.28		-	-	-	1	-	-
	Sun wheel PG50 Z=24 i = 3.87		-	-	-	-	1	-
	Sun wheel PG50 Z=27 i = 3.55		-	-	-	-	-	1
	Sun wheel PG50 Z=12 i = 6.75		-	1	-	-	-	-
1061	Retaining ring A 15		3	3	3	3	3	3
1062	Ring gear PG50		1	1	1	1	1	1
1063	Planet gear PG50 i = 5.6		3	-	-	-	-	-
	Planet gear PG50 i = 4.83		-	-	3	-	-	-
	Planet gear PG50 i = 4.28		-	-	-	3	-	-
	Planet gear PG50 i = 3.87		-	-	-	-	3	-
	Planet gear PG50 i = 3.55		-	-	-	-	-	3
	Planet gear PG50 i = 6.75		-	3	-	-	-	-
1065	Roller		81	81	81	81	81	81
1066	Washer PG50		3	3	3	3	3	3
1067	Planet carrier PG50		1	1	1	1	1	1
1068	Planet pin PG50		3	3	3	3	3	3
1069	Cover PG50		1	1	1	1	1	1
1156	Washer PG50		3	3	3	3	3	3

Impeller

Pos.	Description			
		50 Hz	SRP.08.30 SRP.10.30 SRP.13.30 SRP.16.30 SRP.18.30	SRP.30.30 SRP.40.30 SRP.50.30 SRP.60.30 SRP.70.30
		60 Hz SI	SRP.08.30 SRP.11.30 SRP.14.30 SRP.18.30 SRP.23.30	SRP.30.30 SRP.40.30 SRP.55.30 SRP.70.30
		60 Hz US	SRP.11.12 SRP.15.12 SRP.19.12 SRP.26.12 SRP.30.12	SRP.40.12 SRP.55.12 SRP.75.12 SRP.95.12
			300/35 8 ° Ø300mm	300/35 25 ° Ø300mm
		Kit No	*95038677*	*95038678*
1103	Impeller 300/35 8°		1	-
	Impeller 300/35		-	1
1104	Lip seal		2	2
1105	Fit-in key		1	1
1106	Slotted nut KM6		2	2
1107	Lock washer MB6		2	2
1108	O-ring		1	1
1109	Hub cover MDR300		1	1
1110	Washer		1	1
1111	Hexagon head screw		1	1

SRP.08.30 - SRP.70.30 (50/60 Hz), SRP.11.12 - SRP.95.12 (60 Hz, North America)

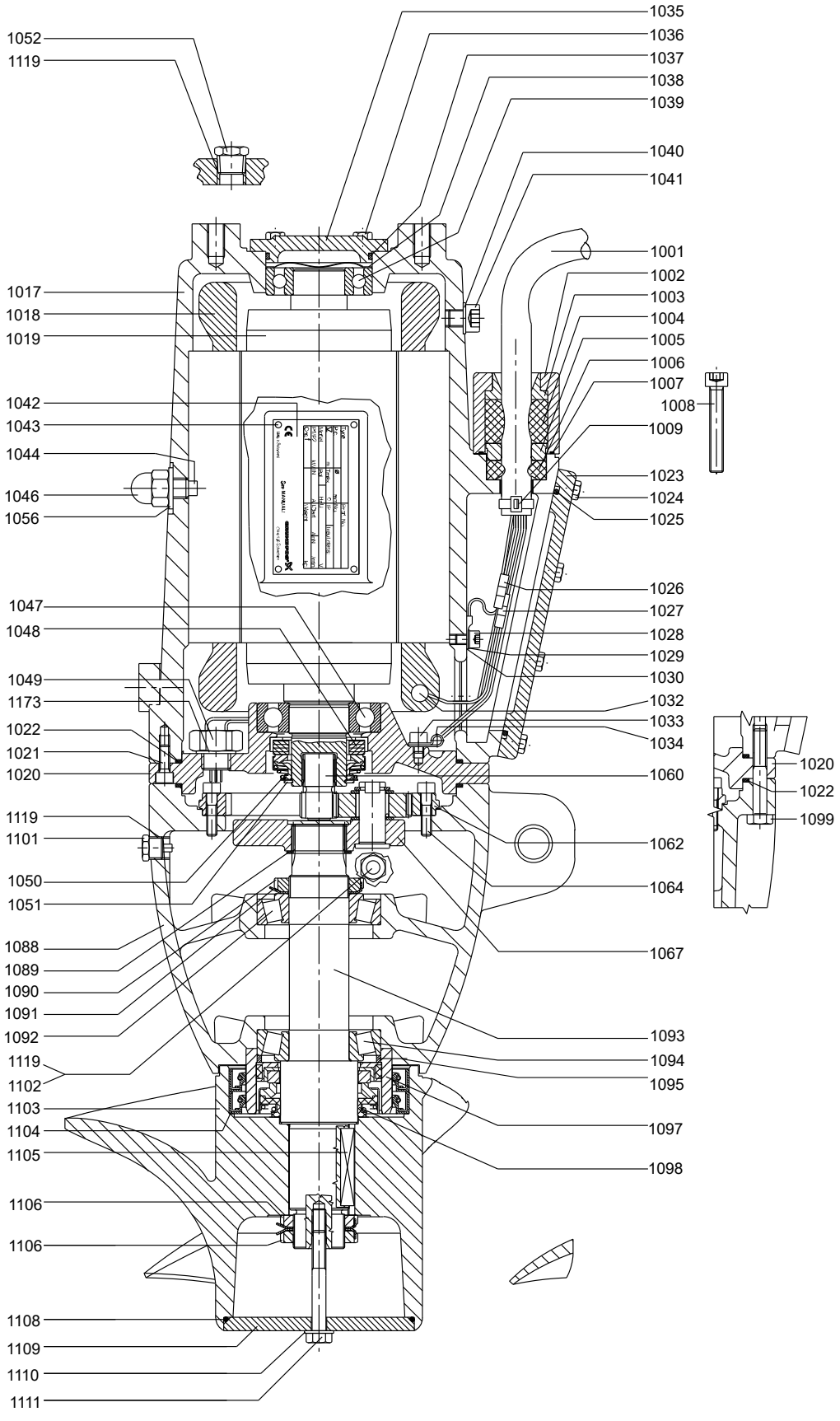

Motor

Pos.	Description		Non-Ex version			Ex version		
		50 Hz	SRP.08.30 SRP.10.30 SRP.13.30 SRP.16.30 SRP.18.30	SRP.30.30 SRP.40.30	SRP.50.30 SRP.60.30 SRP.70.30	SRP.08.30 SRP.10.30 SRP.13.30 SRP.16.30 SRP.18.30	SRP.30.30	SRP.60.30 SRP.70.30
		60 Hz SI	SRP.08.30 SRP.11.30 SRP.14.30 SRP.18.30	SRP.23.30 SRP.30.30 SRP.40.30	SRP.55.30 SRP.70.30	-	-	-
		60 Hz US	SRP.11.12 SRP.15.12 SRP.19.12 SRP.26.12	SRP.30.12 SRP.40.12 SRP.55.12	SRP.75.12 SRP.95.12	-	-	-
		Pole kW Hp	2 pole 2.0 kW 2.70 Hp	2 pole 4.0 kW 5.40 Hp	2 pole 7.0 kW 9.50 Hp	2 pole 2.0 kW 2.70 Hp	2 pole 3.5 kW 4.75 Hp	2 pole 7.0 kW 9.50 Hp
		Kit No	*95038679*	*95038680*	*95038681*	*95038682*	*95038683*	*95038684*
1002	Cable flange MD50		1	1	1	1	1	1
1007	O-ring		1	1	1	1	1	1
1008	Cylinder head screw		2	2	2	2	2	2
1017	Motor housing MD50		1	1	1	1	1	1
1018	Stator winded MD50		1	1	1	1	1	1
1019	Rotor with shaft MD50		1	1	1	1	1	1
1020	Motor flange MD50		1	1	1	1	1	1
1021	Cylinder head screw		3	3	3	3	3	3
1022	O-ring		2	2	2	2	2	2
1023	Terminal box cover MD50		1	1	1	1	1	1
1024	Hexagon head screw		8	8	8	8	8	8
1025	O-ring		1	1	1	1	1	1
1028	Cylinder head screw		1	1	1	1	1	1
1029	Lock washer M6		1	1	1	1	1	1
1033	Cylinder head screw		1	1	1	1	1	1
1034	Cable clamp		1	1	1	1	1	1
1035	Bearing cover MD50		1	1	1	1	1	1
1036	Hexagon head screw		4	4	4	4	4	4
1037	O-ring		1	1	1	1	1	1
1038	Compensation disc		1	1	1	1	1	1
1039	Ball bearing SKF 6206.2RS1/C3 GJN		1	1	1	1	1	1
1040	U-washer		1	1	1	1	1	1
1041	Cylinder head screw		1	1	1	1	1	1
1044	Set screw		1	1	1	1	1	1
1046	Nut		1	1	1	1	1	1
1047	Ball bearing SKF 6207.2RS1/C3 GJN		1	1	1	1	1	1
1048	Mechanical shaft seal		1	1	1	1	1	1
1049	Water-in-oil sensor		1	1	1	1	1	1
1050	Shim		1	1	1	1	1	1
1051	Retaining ring A32		1	1	1	1	1	1
1052	Plug		1	1	1	1	1	1
1053	Connection for protective earthing		-	-	-	1	1	1
1056	Seal washer		1	1	1	1	1	1
1119	PTFE tape		1	1	1	1	1	1
1173	Seal washer		1	1	1	1	1	1

SRP.08.30 - SRP.70.30 (50/60 Hz), SRP.11.12 - SRP.95.12 (60 Hz, North America)

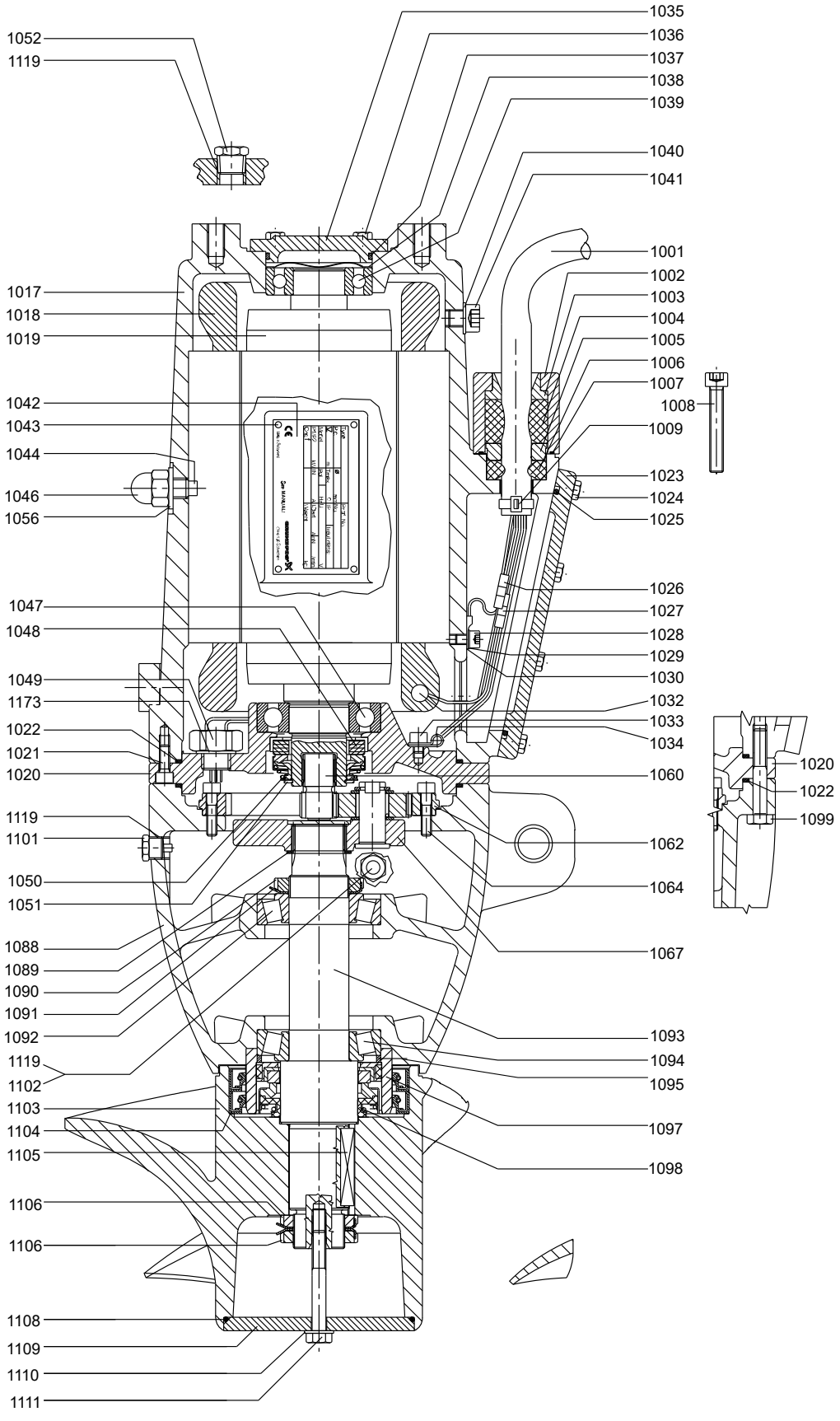

Impeller diameter 50/20

SRP.35.50 - SRP.50.50 (50/60 Hz), SRP.48.20 - SRP.68.20 (60 Hz, North America)

Bearing, motor

Pos.	Description	Dimensions	95065458
1038	Compensation disc	51 x 61	1
1039	Ball bearing SKF 6206.2RS1/C3 GJN	30 x 62 x 16	1
1047	Ball bearing SKF 6207.2RS1/C3 GJN	35 x 72 x 17	1

Bearing, gearbox

Pos.	Description	Dimensions	95065459
1090	Slotted nut KM7	M35 x 1.5	1
1091	Lock washer MB7	∅35	1
1092	Tapered roller bearing 30207	35 x 72 x 18.25	1
1094	Tapered roller bearing 30207	35 x 72 x 18.25	1

Cable entry, 1.5 mm^2

Pos.	Description	Dimensions	95065457
1003	Cable guide MD50		1
1004	Cable sealing large MD50	∅35.5/∅17.3 x 31	1
1005	Thrust washer MD50		1
1006	Cable sealing small MD50	∅34/∅17.3 x 13.5	1
1007	O-ring	1.78 x 37.82	1
1008	Cylinder head screw	M8 x 50	2
1009	Cable relief	∅20	1
1025	O-ring	2.62 x 113.97	1
1026	Cable joint	1.5 mm^2	6
1027	Cable joint	1.5 mm^2	4
1030	Cable shoe	1.5 mm^2/M6	1
-	Shrink hose for connectors		10

Gear casing

Pos.	Description	Dimensions	95038404
1088	Gear casing MD50		1
1089	Retaining ring A 32		1
1090	Slotted nut KM7	M35 x 1.5	1
1091	Lock washer MB7	∅35	1
1092	Tapered roller bearing 30207	35 x 72 x 18.25	1
1093	Gear shaft MD50		1
1094	Tapered roller bearing 30207	35 x 72 x 18.25	1
1101	Drain plug with magnet	1/4" Gas	1
1102	Plug	1/4" Gas	2
1119	PTFE tape		1

Radial sealing

Pos.	Description	Dimensions	95065461*	95039130
1096	Speedy Sleeve	∅85 mm	1	-
1104	Lip seal	85 x 105 x 13	2	2
1108	O-ring	2.5 x 85.0	1	1
1108	O-ring	3.0 x 105.0	1	1
1108	O-ring	3.0 x 184.0	1	1
1110	Washer	∅8.4 / 16 x 1.6	-	1
1157	Gasket	96 x 75 x 2	1	1

* Suitable for wear ring without ceramic (old version).

Seal kit

Pos.	Description		95065485
1004	Cable sealing large MD50	∅35.5/∅17.3 x 31	1
1006	Cable sealing small MD50	∅34/∅17.3 x 13.5	1
1007	O-ring	1.78 x 37.82	1
1022	O-ring	2.62 x 158.42	2
1025	O-ring	2.62 x 113.97	1
1037	O-ring	2.62 x 56.82	1
1048	Mechanical shaft seal	∅32	1
1050	Shim	32 x 45 x 0.5	1
1051	Retaining ring A32		1
1108	O-ring	3.0 x 184.0	1

Shaft seal

Pos.	Description	Description	95065462
1095	Intermediate ring	∅72/67 x 4	1
1098	Mechanical shaft seal	∅45	1

Slotted nut

Pos.	Description	Dimensions	95038413
1106	Slotted nut KM6	M30 x 1.5	2
1107	Lock washer MB6	∅30	2

Water-in oil sensor

Pos.	Description	Dimensions	95038409
1049	Water-in-oil sensor		1
1173	Seal washer	17 x 23 x 1.5	1

Wear ring

Pos.	Description	Dimensions	Standard
			95037374
1097	Wear ring ceramic	∅85 mm	1
1104	Lip seal	85 x 105 x 13	2
1108	O-ring	2.5 x 85.0	1
	O-ring	3.0 x 105.0	1
	O-ring	3.0 x 184.0	1
1157	Gasket	96 x 75 x 2	1

SRP.35.50 - SRP.50.50 (50/60 Hz), SRP.48.20 - SRP.68.20 (60 Hz, North America)

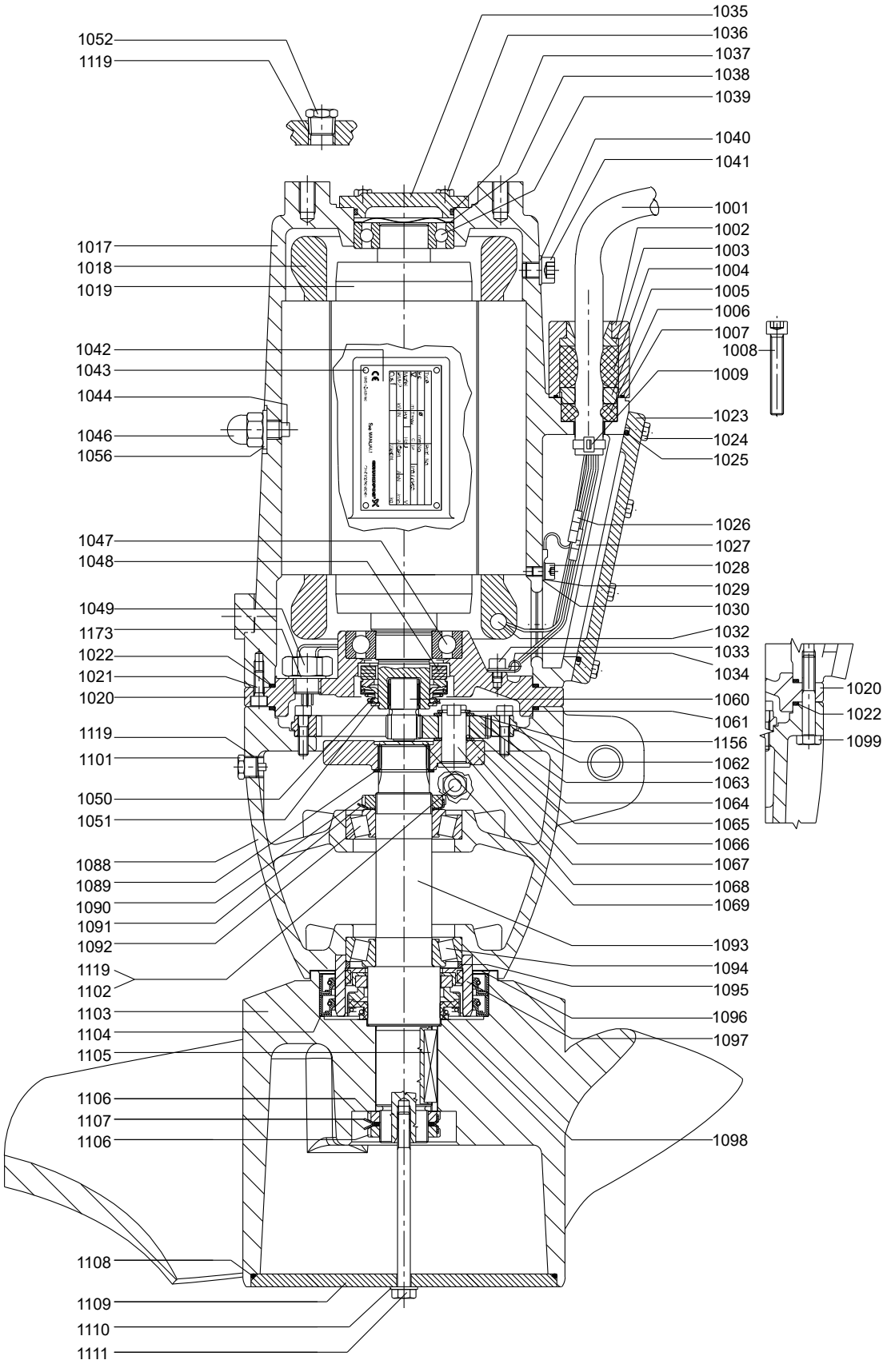

Cable

Pos.	Description	Dimensions	95038410	95038411	95038412
1001	Cable	12 x 1.5 mm^2 ∅17.3	10 m / 30 ft	15 m / 50 ft	25 m / 80 ft
1026	Cable joint	1.5 mm^2	6	6	6
1027	Cable joint	1.5 mm^2	4	4	4
1030	Cable shoe	1.5 mm^2/M6	1	1	1

Gear

Pos.	Description	50 Hz	-	SRP.35.50	SRP.50.50
		60 Hz SI	SRP.35.50	SRP.50.50	-
		60 Hz US	SRP.48.20	SRP.68.20	-
		Kit No	95065523	95065509	95065510
1060	Sun wheel PG50 Z=15 i = 6.75		1	-	-
	Sun wheel PG50 Z=15 i = 5.6		-	1	-
	Sun wheel PG50 Z=18 i = 4.83		-	-	1
1061	Retaining ring A 15		3	3	3
1062	Ring gear PG50		1	1	1
1063	Planet gear PG50 i = 6.75		-	-	-
	Planet gear PG50 i = 5.6		-	3	-
	Planet gear PG50 i = 4.83		-	-	3
1065	Roller		81	81	81
1066	Washer PG50		3	3	3
1067	Planet carrier PG50		1	1	1
1068	Planet pin PG50		3	3	3
1069	Cover PG50		1	1	1
1156	Washer PG50		3	3	3

Impeller

Pos.	Description	500/35 ∅500mm
	Kit No	95038696
1103	Impeller 500/35	1
1104	Lip seal	2
1105	Fit-in key	1
1106	Slotted nut KM6	2
1107	Lock washer MB6	2
1108	O-ring	1
1109	Hub cover MDR500	1
1110	Washer	1
1111	Hexagon head screw	1

SRP.35.50 - SRP.50.50 (50/60 Hz), SRP.48.20 - SRP.68.20 (60 Hz, North America)

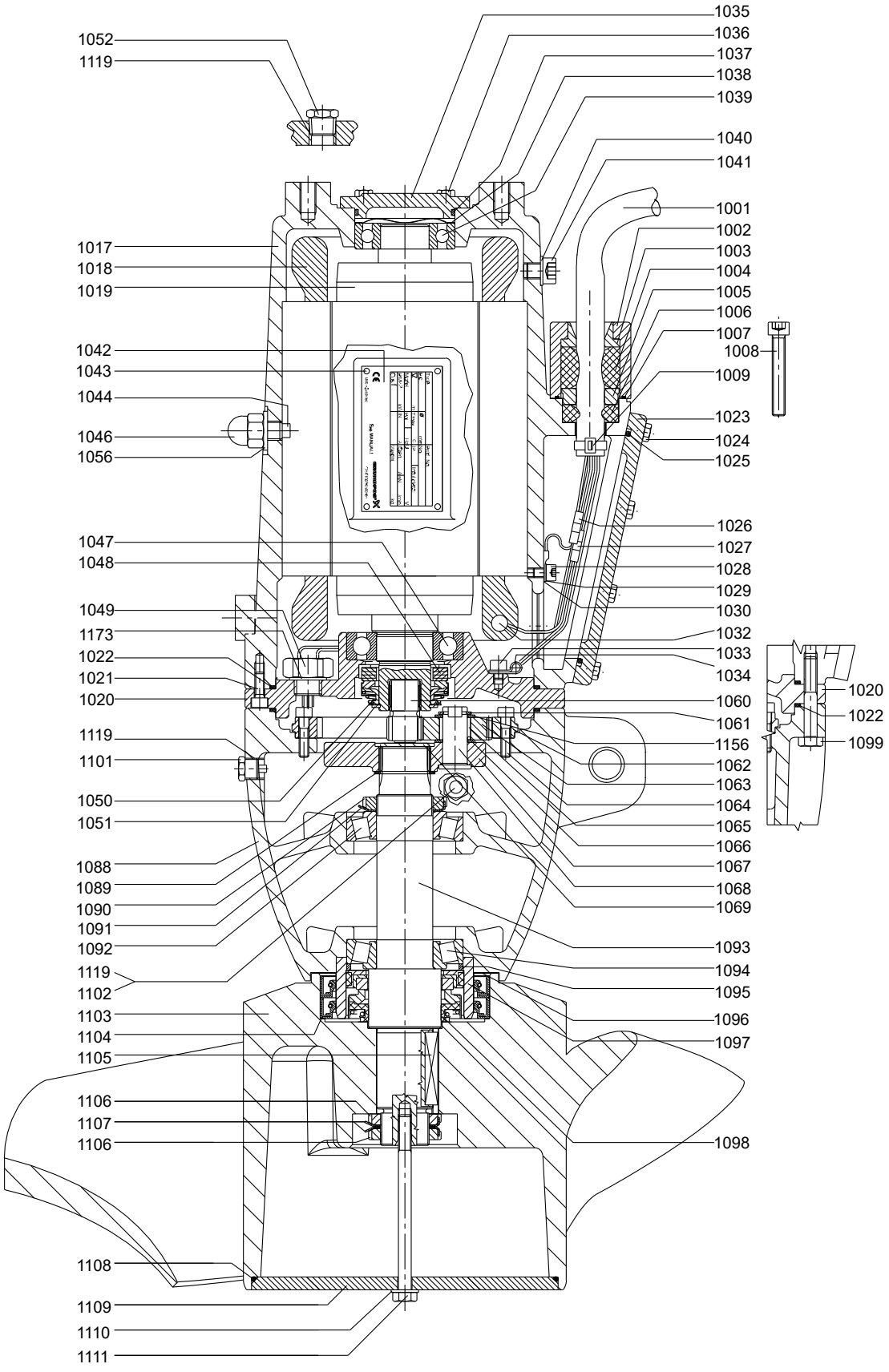

Motor

Pos.	Description		Non-Ex version	Ex version
		50 Hz	SRP.35.50 SRP.50.50	SRP.35.50 SRP.50.50
		60 Hz SI	SRP.35.50 SRP.50.50	-
		60 Hz US	SRP.48.20 SRP.68.20	-
		Pole kW Hp	4 pole 5.0 kW 6.8 Hp	4 pole 5.0 kW
		Kit No	*95038697*	*95038408*
1002	Cable flange MD50		1	1
1007	O-ring		1	1
1008	Cylinder head screw		2	2
1017	Motor housing MD50		1	1
1018	Stator winded MD50 4 pole 5.0 kW		1	1
1019	Rotor with shaft MD50 4 pole 5.0 kW		1	1
1020	Motor flange MD50		1	1
1021	Cylinder head screw		3	3
1022	O-ring		2	2
1023	Terminal box cover MD50		1	1
1024	Hexagon head screw		8	8
1025	O-ring		1	1
1028	Cylinder head screw		1	1
1029	Lock washer M6		1	1
1033	Cylinder head screw		1	1
1034	Cable clamp		1	1
1035	Bearing cover MD50		1	1
1036	Hexagon head screw		4	4
1037	O-ring		1	1
1038	Compensation disc		1	1
1039	Ball bearing SKF 6206.2RS1/C3 GJN		1	1
1040	U-washer		1	1
1041	Cylinder head screw		1	1
1044	Set screw		1	1
1046	Nut		1	1
1047	Ball bearing SKF 6207.2RS1/C3 GJN		1	1
1048	Mechanical shaft seal		1	1
1049	Water-in-oil sensor		1	1
1050	Shim		1	1
1051	Retaining ring A32		1	1
1052	Plug		1	1
1053	Connection for protective earthing		-	1
1056	Seal washer		1	1
1119	PTFE tape		1	1
1173	Seal washer		1	1

SRP.35.50 - SRP.50.50 (50/60 Hz), SRP.48.20 - SRP.68.20 (60 Hz, North America)

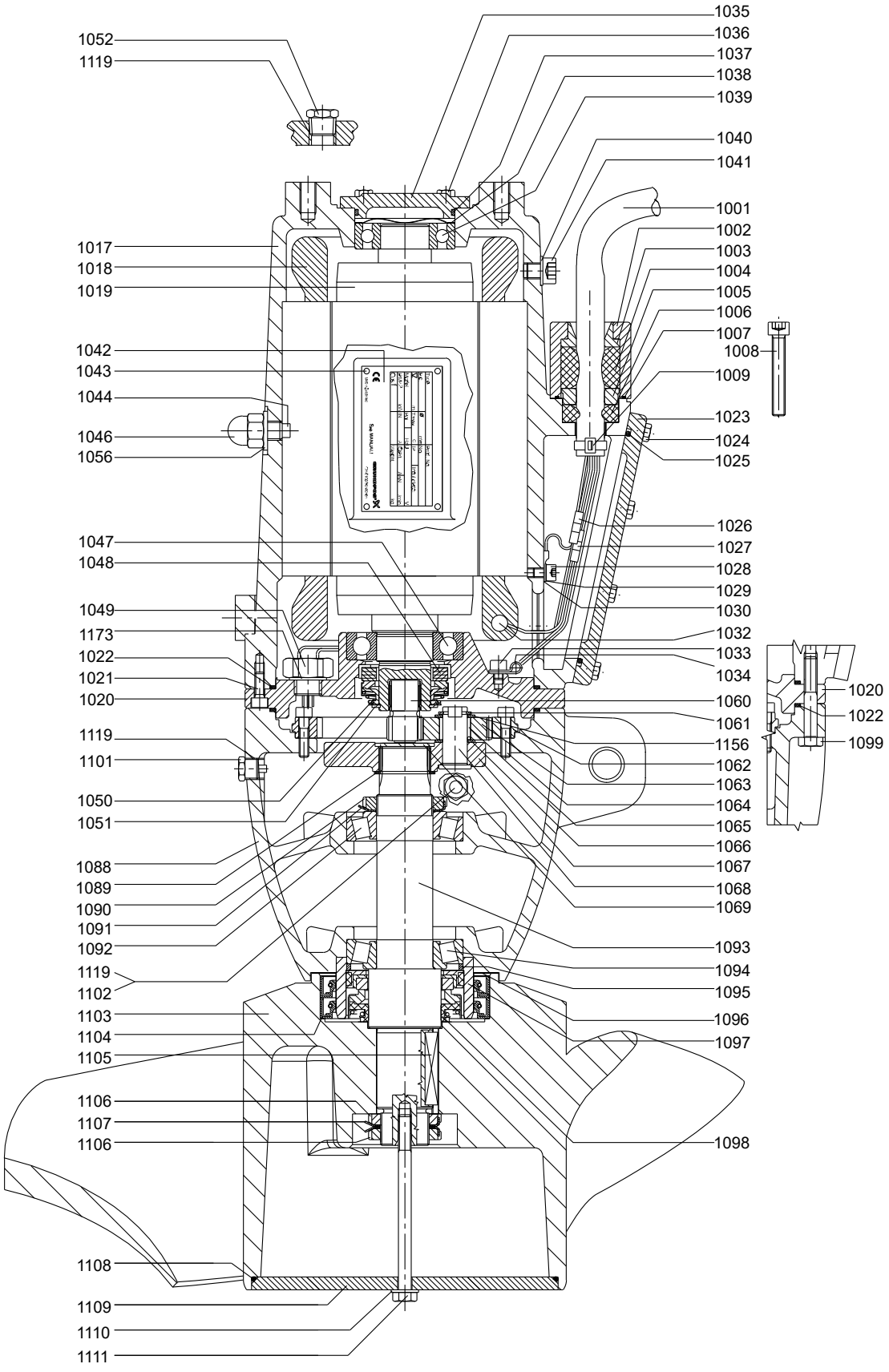

SRP.65.50 / SRP.80.50 / SRP.100.50 (50 Hz), SRP.70.50 / SRP.100.50 (60 Hz) SRP.95.20 / SRP.136.20 (60 Hz, North America)

Bearing, motor

Pos.	Description	Dimensions	96645955
1038	Compensation disc	71 x 79	1
1039	Ball bearing SKF 6208.2RS1/C3 GJN	40 x 80 x 18	1
1047	Ball bearing SKF 6010.2RS1/C3 GJN	50 x 80 x 16	1

Bearing, gearbox

Pos.	Description	Dimensions	95065467
1090	Slotted nut KM9; Elastic stop	M45 x 1.5	1
1092	Tapered roller bearing 30209	45 x 85 x 20.75	1
1094	Tapered roller bearing 32209	45 x 85 x 24.75	1

Cable entry, 2.5 mm^2

Pos.	Description	Dimensions	95065465
1003	Cable guide		1
1004	Cable sealing large	∅48/∅20.2 x 34	1
1005	Thrust washer		1
1006	Cable sealing small	∅44/∅20.2 x 18.5	1
1007	O-ring	3.0 x 54.0	1
1008	Cylinder head screw	M10 x 30	2
1009	Cable relief	∅23	1
1025	O-ring	3.53 x 139.29	1
1026	Cable joint	2.5 mm^2	6
1027	Cable joint	2.5 mm^2	4
1030	Cable shoe	2.5 mm^2/M6	1
-	Shrink hose for connectors		10

Gear casing

Pos.	Description	Dimensions	95038481
1088	Gear casing MD160		1
1089	Retaining ring A 40		1
1090	Slotted nut KM9; Elastic stop	M45 x 1.5	1
1092	Tapered roller bearing 30209	45 x 85 x 20.75	1
1093	Gear shaft MD160		1
1094	Tapered roller bearing 32209	45 x 85 x 24.75	1
1101	Drain plug with magnet	3/8" Gas	1
1102	Plug	3/8" Gas	2
1119	PTFE tape		1

Radial sealing

Pos.	Description	Dimensions	95065469*	95039131
1096	Speedy Sleeve	∅100	1	-
1104	Lip seal	100 x 120 x 12	2	2
1108	O-ring	2.62 x 94.92	1	1
1108	O-ring	3.0 x 184.0	1	1
1108	O-ring	3.0 x 225.0	1	1
1110	Washer	∅10.5 / 20 x 2	-	1
1157	Gasket	96 x 75 x 2	1	1

* Suitable for wear ring without ceramic (old version).

Seal kit

Pos.	Description		95065486
1004	Cable sealing large	∅48/∅20.2 x 34	1
1006	Cable sealing small	∅44/∅20.2 x 18.5	1
1007	O-ring	3.0 x 54.0	1
1022	O-ring	2.62 x 215.57	2
1025	O-ring	3.53 x 139.29	1
1037	O-ring	2.62 x 75.87	1
1048	Mechanical shaft seal	∅50	1
1050	Shim	50 x 63 x 0.5	1
1051	Retaining ring A 50		1
1108	O-ring	3.0 x 184.0	1

Shaft seal

Pos.	Description	Description	95065470
1098	Mechanical shaft seal	∅50	1

Slotted nut

Pos.	Description	Dimensions	95038489
1106	Slotted nut KM8	M40 x 1.5	2
1107	Lock washer MB8	∅40	2

Water-in oil sensor

Pos.	Description	Dimensions	95038409
1049	Water-in-oil sensor		1
1173	Seal washer	17 x 23 x 1.5	1

Wear ring

Pos.	Description	Dimensions	Standard 95037375
1097	Wear ring ceramic	∅100	1
1104	Lip seal	100 x 120 x 12	2
1108	O-ring	2.62 x 94.92	1
	O-ring	3.0 x 184.0	1
	O-ring	3.0 x 225.0	1
1157	Gasket	96 x 75 x 2	1

SRP.65.50 / SRP.80.50 / SRP.100.50 (50 Hz), SRP.70.50 / SRP.100.50 (60 Hz)
SRP.95.20 / SRP.136.20 (60 Hz, North America)

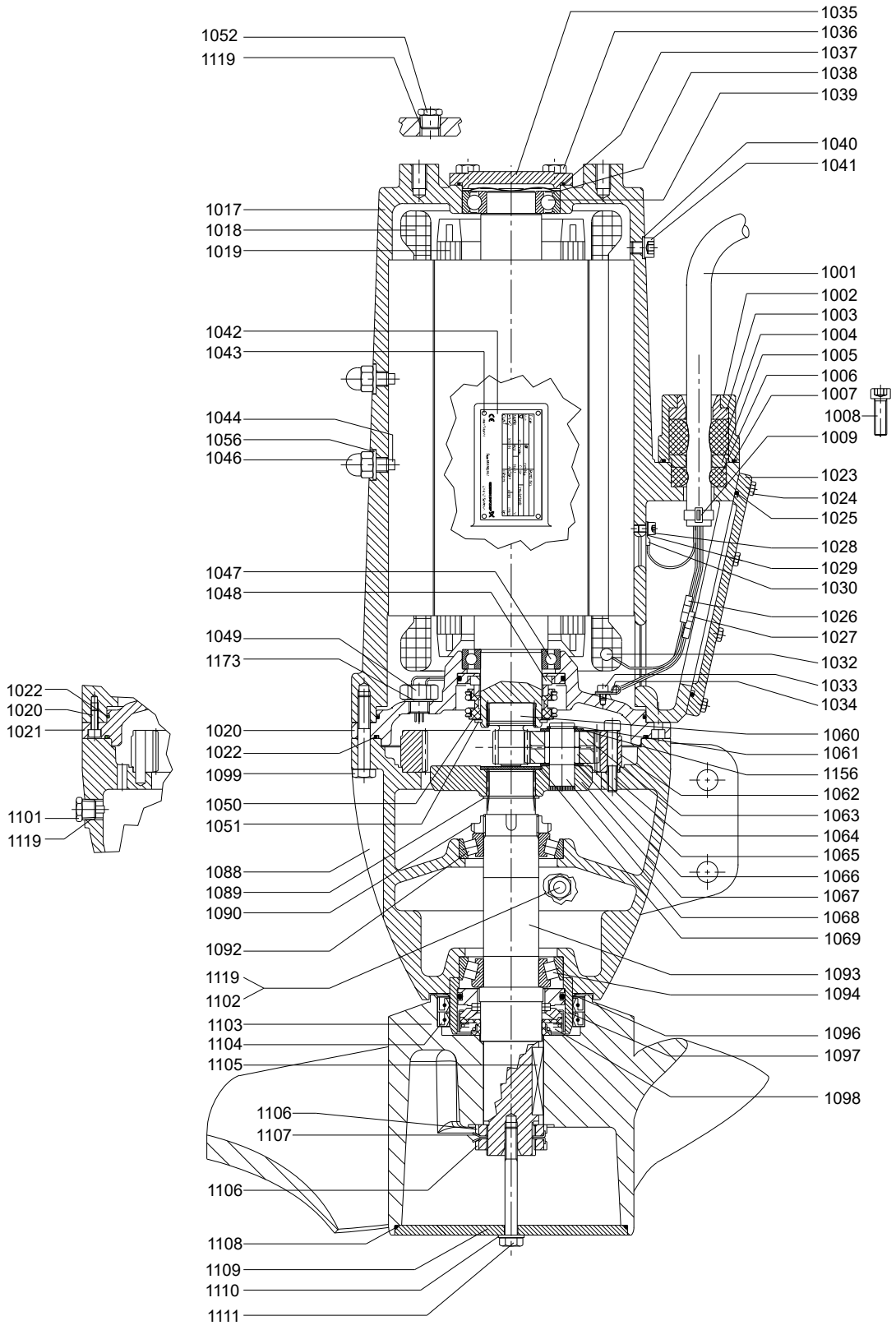

Cable

Pos.	Description	Dimensions	95038486	95038487	95038488
1001	Cable	12 x 2.5 mm^2 ∅20.5	10 m / 30 ft	15 m / 50 ft	25 m / 80 ft
1026	Cable joint	2.5 mm^2	6	6	6
1027	Cable joint	2.5 mm^2	4	4	4
1030	Cable shoe	2.5 mm^2/M6	1	1	1

Gear

Pos.	Description	50 Hz	SRP.65.50	SRP.80.50	SRP.100.50	-
		60 Hz SI	SRP.100.50	-	-	SRP.70.50
		60 Hz US	SRP.136.20	-	-	SRP.95.20
		Kit No	95065495	95065515	95065516	95065518
1060	Sun wheel PG160 Z=21 i = 4.28		1	-	-	-
	Sun wheel PG160 Z=24 i = 3.87		-	1	-	-
	Sun wheel PG160 Z=27 i = 3.55		-	-	1	-
	Sun wheel PG160 Z=18 i = 4.83		-	-	-	1
1061	Retaining ring A 20		3	3	3	3
1062	Ring gear PG160		1	1	1	1
1063	Planet gear PG160 i = 4.28		3	-	-	-
	Planet gear PG160 i = 3.87		-	3	-	-
	Planet gear PG160 i = 3.55		-	-	3	-
	Planet gear PG160 i = 4.83		-	-	-	3
1065	Roller		114	114	114	114
1066	Washer PG160		3	3	3	3
1067	Planet carrier PG160		1	1	1	1
1068	Planet pin PG160		3	3	3	3
1069	Cover PG160		1	1	1	1
1156	Washer PG160		3	3	3	3

Impeller

Pos.	Description	500/45 ∅500 mm
	Kit No	95038701
1103	Impeller 500/45	1
1104	Lip seal	2
1105	Fit-in key	1
1106	Slotted nut KM8	2
1107	Lock washer MB8	2
1108	O-ring	1
1109	Hub cover MDR500	1
1110	Washer	1
1111	Hexagon head screw	1

SRP.65.50 / SRP.80.50 / SRP.100.50 (50 Hz), SRP.70.50 / SRP.100.50 (60 Hz)
SRP.95.20 / SRP.136.20 (60 Hz, North America)

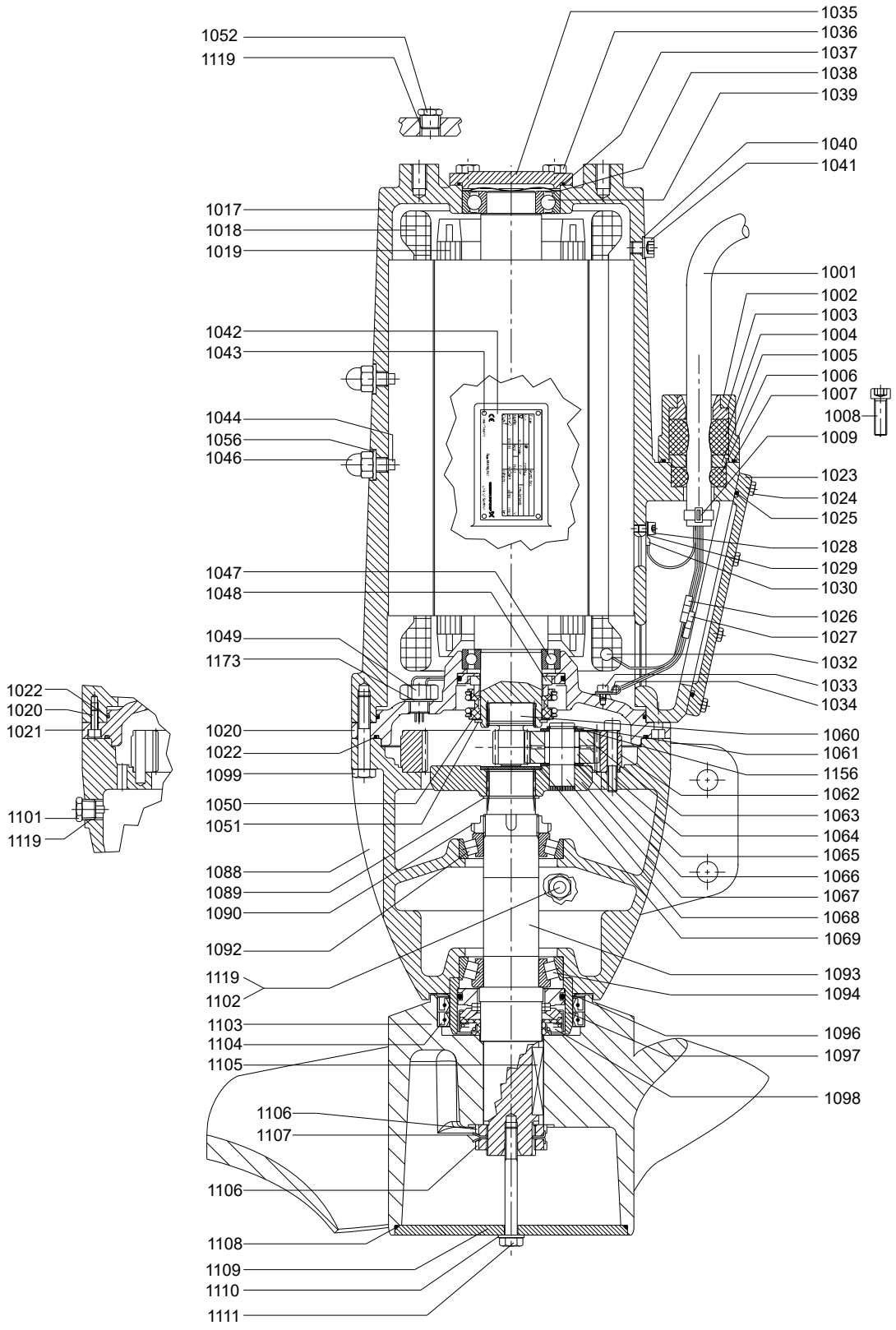

Motor

Pos.	Description		Non-Ex version		Ex version
		50 Hz	SRP.65.50 SRP.80.50	SRP.100.50	SRP.65.50-80.50
		60 Hz SI	SRP.70.50	SRP.100.50	-
		60 Hz US	SRP.95.20	SRP.136.20	-
		Pole kW Hp	4 pole 9.0 kW 12.2 Hp	4 pole 14.0 kW 19 Hp	4 pole 9.0 kW 12.2 Hp
		Kit No	*95038702*	*95038703*	*95038484*
1002	Cable flange MD160/250		1	1	1
1007	O-ring		1	1	1
1008	Cylinder head screw		2	2	2
1017	Motor housing MD160		1	1	1
1018	Stator winded MD160		1	1	1
1019	Rotor with shaft MD160		1	1	1
1020	Motor flange MD160		1	1	1
1021	Cylinder head screw		3	3	3
1022	O-ring		2	2	2
1023	Terminal box cover		1	1	1
1024	Hexagon head screw		8	8	8
1025	O-ring		1	1	1
1028	Cylinder head screw		1	1	1
1029	Lock washer M6		1	1	1
1033	Cylinder head screw		1	1	1
1034	Cable clamp		1	1	1
1035	Bearing cover MD160		1	1	1
1036	Hexagon head screw		4	4	4
1037	O-ring		1	1	1
1038	Compensation disc		1	1	1
1039	Ball bearing SKF 6208.2RS1/C3 GJN		1	1	1
1040	U-Washer		1	1	1
1041	Cylinder head screw		1	1	1
1044	Set screw		2	2	2
1046	Nut		2	2	2
1047	Ball bearing SKF 6010.2RS1/C3 GJN		1	1	1
1048	Mechanical shaft seal		1	1	1
1049	Water-in-oil sensor		1	1	1
1050	Shim		1	1	1
1051	Retaining ring A 50		1	1	1
1052	Plug		1	1	1
1053	Connection fro protective earthing		-	-	1
1056	Seal washer		2	2	1
1119	PTFE tape		1	1	2
1173	Seal washer		1	1	1

SRP.65.50 / SRP.80.50 / SRP.100.50 (50 Hz), SRP.70.50 / SRP.100.50 (60 Hz)
SRP.95.20 / SRP.136.20 (60 Hz, North America)

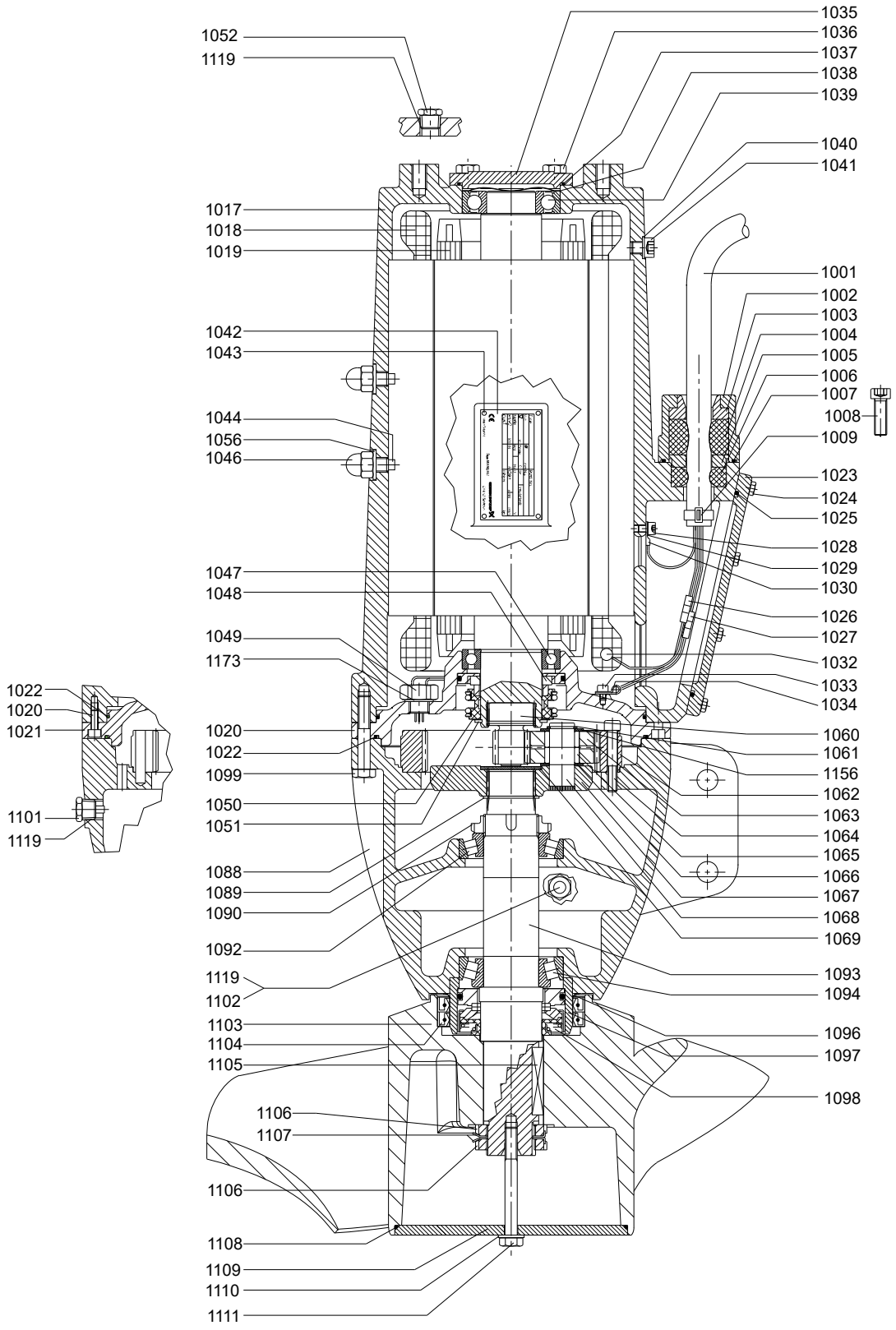

Impeller diameter 80/32

SRP.70.80/100.80/130.80 (50 Hz), SRP.70.80/120.80/130.80 (60 Hz) SRP.95.32/163.32/176.32 (60 Hz North America)

Bearing, motor

Pos.	Description	Dimensions	96645955
1038	Compensation disc	71 x 79	1
1039	Ball bearing SKF 6208.2RS1/C3 GJN	40 x 80 x 18	1
1047	Ball bearing SKF 6010.2RS1/C3 GJN	50 x 80 x 16	1

Bearing, gearbox

Pos.	Description	Dimensions	95065467
1090	Slotted nut KM9; Elastic stop	M45 x 1.5	1
1092	Tapered roller bearing 30209	45 x 85 x 20.75	1
1094	Tapered roller bearing 32209	45 x 85 x 24.75	1

Cable entry, 2.5 mm^2

Pos.	Description	Dimensions	95065465
1003	Cable guide		1
1004	Cable sealing large	∅48 / ∅20.2 x 34	1
1005	Thrust washer		1
1006	Cable sealing small	∅44 / ∅20.2 x 18.5	1
1007	O-ring	3.0 x 54.0	1
1008	Cylinder head screw	M10 x 30	2
1009	Cable relief	∅23	1
1025	O-ring	3.53 x 139.29	1
1026	Cable joint	2.5 mm^2	6
1027	Cable joint	2.5 mm^2	4
1030	Cable shoe	2.5 mm^2/M6	1
-	Shrink hose for connectors		10

Gear casing

Pos.	Description	Dimensions	95038481
1088	Gear casing MD160		1
1089	Retaining ring A 40		1
1090	Slotted nut KM9; Elastic stop	M45 x 1.5	1
1092	Tapered roller bearing 30209	45 x 85 x 20.75	1
1093	Gear shaft MD160		1
1094	Tapered roller bearing 32209	45 x 85 x 24.75	1
1101	Drain plug with magnet	3/8" Gas	1
1102	Plug	3/8" Gas	2
1119	PTFE tape		1

Radial seal

Pos.	Description	Dimensions	95065469*	95039131
1096	Speedy Sleeve	∅100	1	-
1104	Lip seal	100 x 120 x 12	2	2
1108	O-ring	2.62 x 94.92	1	1
1108	O-ring	3.0 x 184.0	1	1
1108	O-ring	3.0 x 225.0	1	1
1110	Washer	∅10.5 / 20 x 2	-	1
1157	Gasket	96 x 75 x 2	1	1

* Suitable for wear ring without ceramic (old version).

Seal kit

Pos.	Description		95065488
1004	Cable sealing large	∅48 / ∅20.2 x 34	1
1006	Cable sealing small	∅44 / ∅20.2 x 18.5	1
1007	O-ring	3.0 x 54.0	1
1022	O-ring	2.62 x 215.57	2
1025	O-ring	3.53 x 139.29	1
1037	O-ring	2.62 x 75.87	1
1048	Mechanical shaft seal	∅50	1
1050	Shim	50 x 63 x 0.5	1
1051	Retaining ring A 50		1
1108	O-ring	3.0 x 225.0	1

Shaft seal

Pos.	Description	Description	95065470
1098	Mechanical shaft seal	∅50	1

Slotted nut

Pos.	Description	Dimensions	95038489
1106	Slotted nut KM8	M40 x 1.5	2
1107	Lock washer MB8	∅40	2

Water-in oil sensor

Pos.	Description	Dimensions	95038409
1049	Water-in-oil sensor		1
1173	Seal washer	17 x 23 x 1.5	1

Wear ring

Pos.	Description	Dimensions	Standard
			95037375
1097	Wear ring ceramic	∅100	1
1104	Lip seal	100 x 120 x 12	2
1108	O-ring	2.62 x 94.92	1
	O-ring	3.0 x 184.0	1
	O-ring	3.0 x 225.0	1
1157	Gasket	96 x 75 x 2	1

SRP 70.80/100.80/130.80 (50 Hz), SRP.70.80/120.80/130.80 (60 Hz)
SRP.95.32/163.32/176.32 (60 Hz North America)

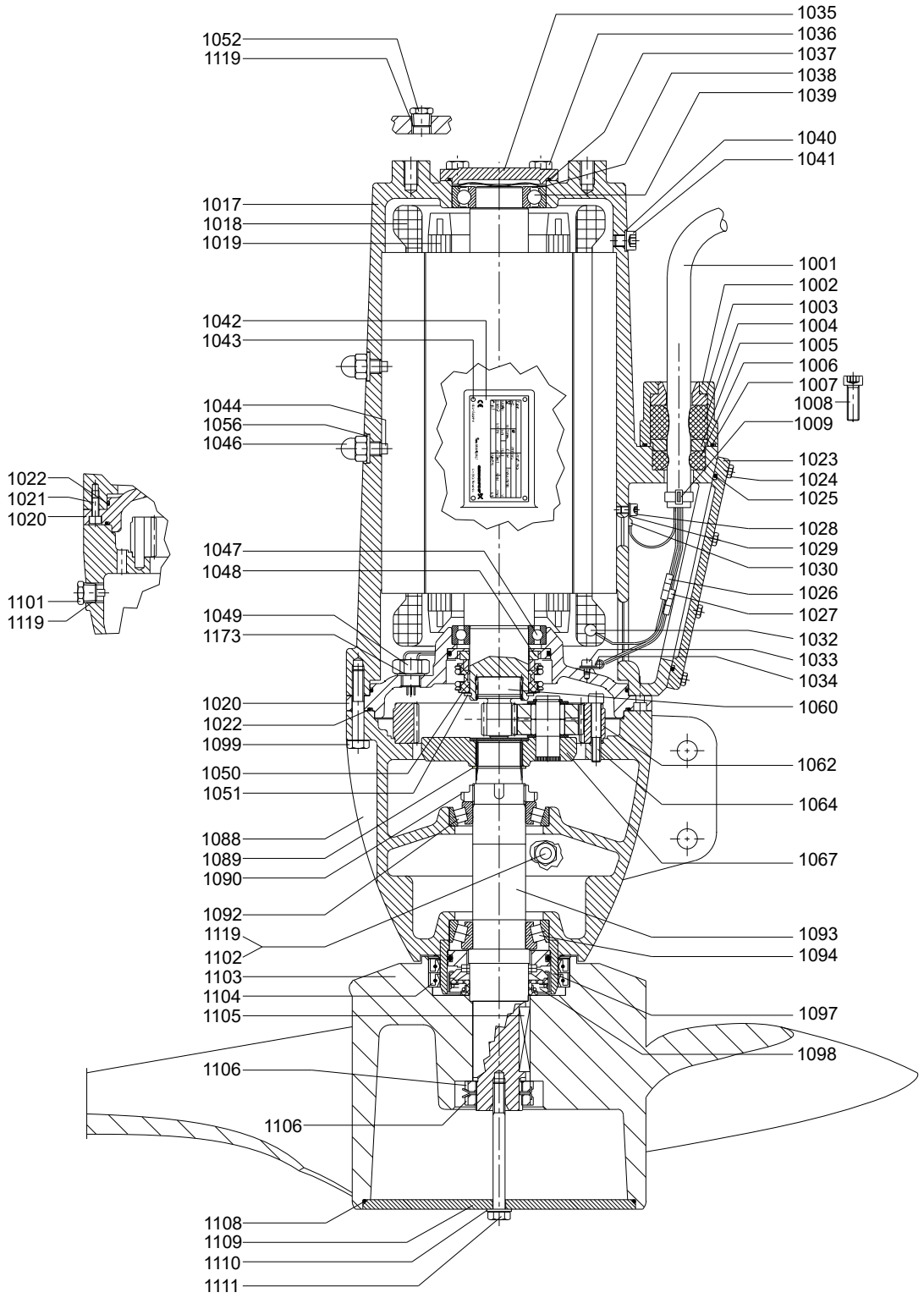

Cable

Pos.	Description	Dimensions	*95038486*	*95038487*	*95038488*
1001	Cable	12 x 2.5 mm^2 ∅20.5	10 m / 30 ft	15 m / 50 ft	25 m / 80 ft
1026	Cable joint	2.5 mm^2	6	6	6
1027	Cable joint	2.5 mm^2	4	4	4
1030	Cable shoe	2.5 mm^2/M6	1	1	1

Gear

Pos.	Description	50 Hz	-	SRP.70.80	SRP.130.80.340	SRP.130.80.375	SRP.100.80
		60 Hz SI	SRP.70.80	SRP.120.80	-	-	SRP.130.80
		60 Hz US	SRP.95.32	SRP.163.32	-	-	SRP.176.32
		Kit No	*95065524*	*95065517*	*95065495*	*95065515*	*95065518*
1060	Sun wheel PG160 Z= 12 i = 6.75		1	-	-	-	-
	Sun wheel PG160 Z= 21 i = 4.28		-	-	1	-	-
	Sun wheel PG160 Z= 24 i = 3.87		-	-	-	1	-
	Sun wheel PG160 Z= 15 i = 5.60		-	1	-	-	-
	Sun wheel PG160 Z= 18 i = 4.83		-	-	-	-	1
1061	Retaining ring A 20		3	3	3	3	3
1062	Ring gear PG160 Z69		1	1	1	1	1
1063	Planet gear PG160 i = 6.75		3	3	-	-	-
	Planet gear PG160 i = 4.28		-	-	3	-	-
	Planet gear PG160 i = 3.87		-	-	-	3	-
	Planet gear PG160 i = 5.60		-	3	-	-	-
	Planet gear PG160 i = 4.83		-	-	-	-	3
1065	Roller		114	114	114	114	114
1066	Washer PG160		3	3	3	3	3
1067	Planet carrier PG160		1	1	1	1	1
1068	Planet pin PG160		3	3	3	3	3
1069	Cover PG160		1	1	1	1	1
1156	Washer PG160		3	3	3	3	3

Impeller

Pos.	Description	800/45 Ø800
		95038707
1103	Impeller 800/45	1
1104	Lip seal	2
1105	Fit-in key	1
1106	Slotted nut KM8	2
1107	Lock washer MB8	2
1108	O-ring	1
1109	Hub cover MDR800	1
1110	Washer	1
1111	Hexagon head screw	1

SRP 70.80/100.80/130.80 (50 Hz), SRP.70.80/120.80/130.80 (60 Hz)
SRP.95.32/163.32/176.32 (60 Hz North America)

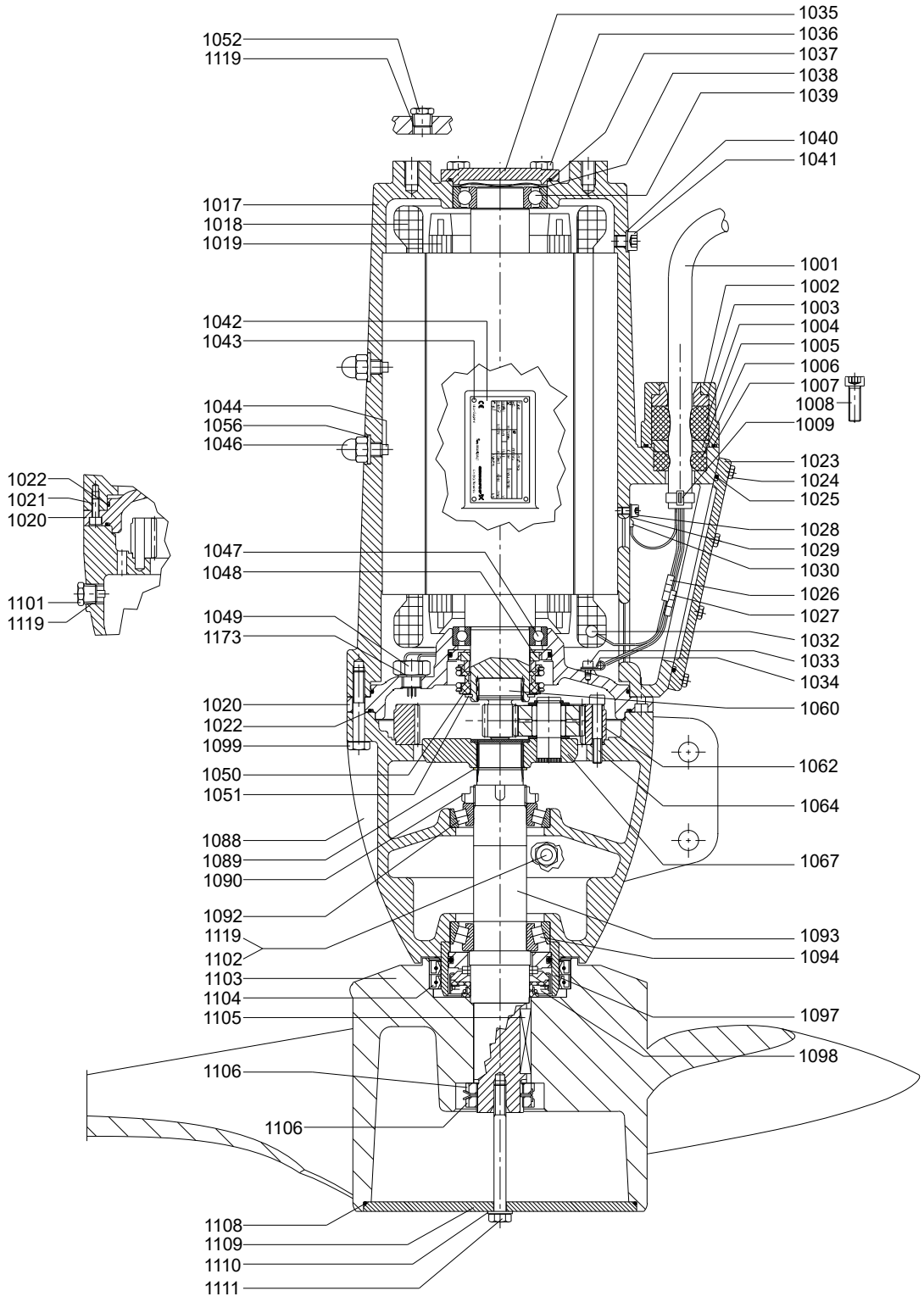

Motor

Pos.	Description		Non-Ex version		Ex version	
		50 Hz	SRP.70.80	SRP.100.80 SRP.130.80	SRP.70.80	SRP.130.80
		60 Hz SI	SRP.70.80	SRP.120.80 SRP.130.80	-	-
		60 Hz US	SRP.95.32	SRP.163.32 SRP.176.32	-	-
			4 pole 9.0 kW 12.2 Hp	4 pole 14.0 kW 19 Hp	4 pole 9.0 kW 12.2 Hp	4 pole 14.0 kW 19 Hp
			95038702	*95038703*	*95038484*	*95038485*
1002	Cable flange MD160/250		1	1	1	1
1007	O-ring		1	1	1	1
1008	Cylinder head screw		2	2	2	2
1017	Motor housing MD160		1	1	1	1
1018	Stator winded MD160		1	1	1	1
1019	Rotor with shaft MD160		1	1	1	1
1020	Motor flange MD160		1	1	1	1
1021	Cylinder head screw		3	3	3	3
1022	O-ring		2	2	2	2
1023	Terminal box cover		1	1	1	1
1024	Hexagon head screw		8	8	8	8
1025	O-ring		1	1	1	1
1028	Cylinder head screw		1	1	1	1
1029	Lock washer M6		1	1	1	1
1033	Cylinder head screw		1	1	1	1
1034	Cable clamp		1	1	1	1
1035	Bearing cover MD160		1	1	1	1
1036	Hexagon head screw		4	4	4	4
1037	O-ring		1	1	1	1
1038	Compensation disc		1	1	1	1
1039	Ball bearing SKF 6208.2RS1/C3 GJN		1	1	1	1
1040	U-Washer		1	1	1	1
1041	Cylinder head screw		1	1	1	1
1044	Set screw		2	2	2	2
1046	Nut		2	2	2	2
1047	Ball bearing SKF 6010.2RS1/C3 GJN		1	1	1	1
1048	Mechanical shaft seal		1	1	1	1
1049	Water-in-oil sensor		1	1	1	1
1050	Shim		1	1	1	1
1051	Retaining ring A 50		1	1	1	1
1052	Plug		1	1	1	1
1053	Connection for protective earthing		-	-	1	1
1056	Seal washer		2	2	2	2
1119	PTFE tape		1	1	1	1
1173	Seal washer		1	1	1	1

SRP 70.80/100.80/130.80 (50 Hz), SRP.70.80/120.80/130.80 (60 Hz)
SRP.95.32/163.32/176.32 (60 Hz North America)

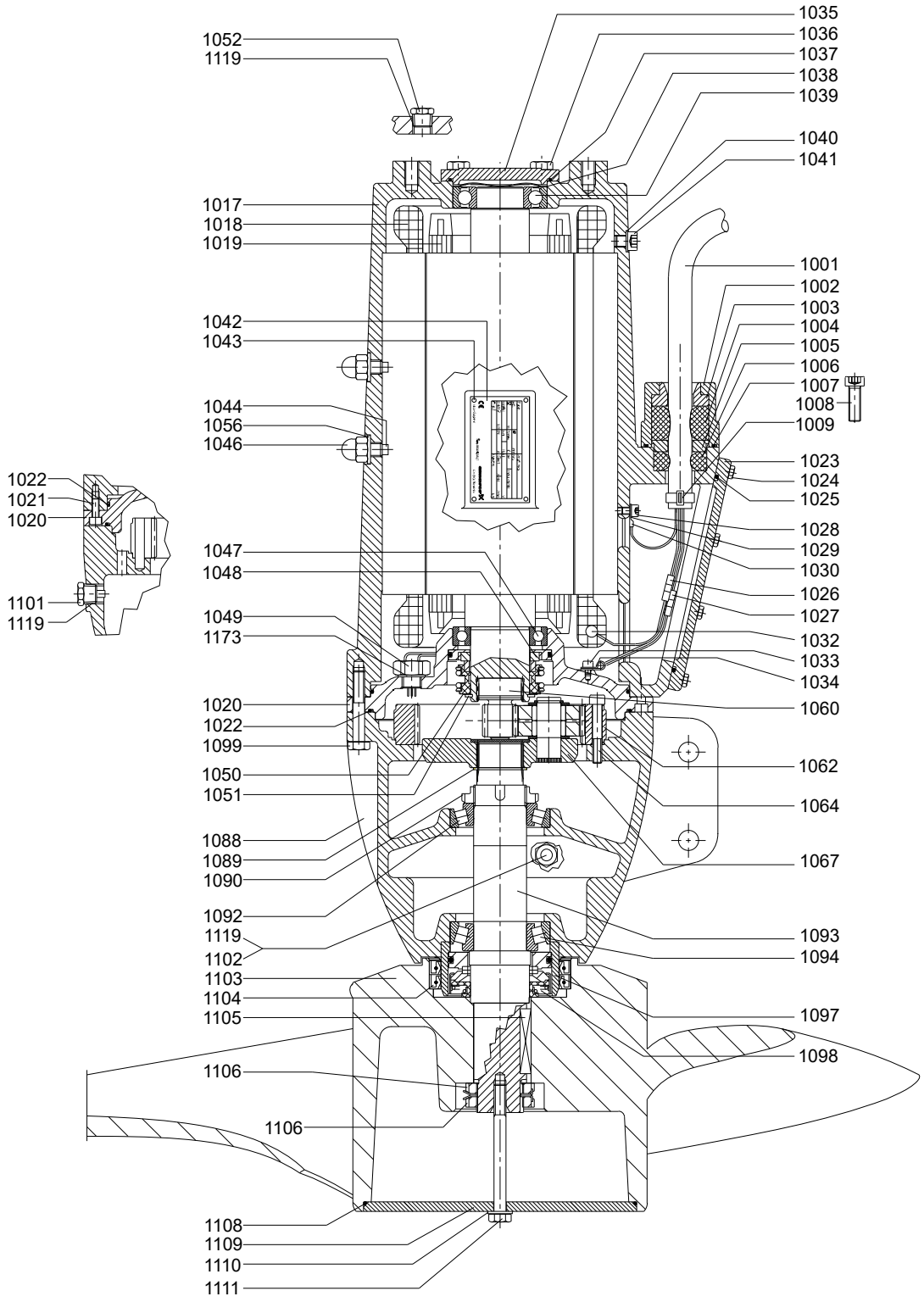

SRP.120.80 / SRP.160.80 / SRP.180.80 / SRP.200.80 / SRP.240.80 50 Hz SRP.150.80 / SRP.180.80 / SRP.200.80 / SRP.240.80 60 Hz SRP.204.32 / SRP.245.32 / SRP.272.32 / SRP.326.32 60 Hz North America

Bearing, motor

Pos.	Description	Dimensions	95065474
1038	Compensation disc	79 x 89	1
1039	Ball bearing SKF 6210.2RS1/C3 GJN	50 x 90 x 20	1
1047	Ball bearing SKF 6210.2RS1/C3 GJN	50 x 90 x 20	1

Bearing, gearbox

Pos.	Description	Dimensions	95065475
1090	Slotted nut KM12	M60 x 2	1
1091	Lock washer MB12	∅60	1
1092	Tapered roller bearing 30212	60 x 110 x 23.75	1
1094	Tapered roller bearing 33212	60 x 110 x 38	1

Cable entry, 4 mm^2

Pos.	Description	Dimensions	95065473
1003	Cable guide		1
1004	Cable sealing large	∅48/∅20.2 x 34	1
1005	Thrust washer		1
1006	Cable sealing small	∅44/∅20.2 x 18.5	1
1007	O-ring	3.0 x 54.0	1
1008	Cylinder head screw	M10 x 30	2
1009	Cable relief	∅23	1
1025	O-ring	3.53 x 139.29	1
1026	Cable joint	4.0 mm2	6
1027	Cable joint	1.5 mm^2	4
1030	Cable shoe	4.0 mm^2/M6	1
-	Shrink hose for connectors	∅9.5 - 4.8	6
-	Shrink hose for connectors	∅6.4 - 3.2	4

Gear casing

Pos.	Description	Dimensions	95038516
1088	Gear casing MD250		1
1090	Slotted nut KM12	M60 x 2	1
1091	Lock washer MB12	∅60	1
1092	Tapered roller bearing 30212	60 x 110 x 23.75	1
1093	Gear shaft MD250		1
1094	Tapered roller bearing 33212	60 x 110 x 38	1
1101	Drain plug with magnet	1/2" Gas	1
1102	Plug	1/2" Gas	2
1119	PTFE tape		1

Radial seal

Pos.	Description	Dimensions	95065477*	95039132
1096	Speedy Sleeve	∅125	1	-
1104	Lip seal	125 x 150 x 12	2	2
1108	O-ring	3.35 x 120.2	1	1
1108	O-ring	3.0 x 225.0	1	1
1108	O-ring	2.62 x 94.92	1	1
1110	Washer	∅13 / 24 x 2.5	-	1

* Suitable for wear ring without ceramic (old version).

Seal kit

Pos.	Description		95065489
1004	Cable sealing large	∅48/∅20.2 x 34	1
1006	Cable sealing small	∅44/∅20.2 x 18.5	1
1007	O-ring	3.0 x 54.0	1
1022	O-ring	3.53 x 253.59	2
1025	O-ring	3.53 x 139.29	1
1037	O-ring	3.53 x 91.67	1
1048	Mechanical shaft seal	ø50	1
1050	Shim	50 x 63 x 0.5	1
1051	Retaining ring A 50		1
1108	O-ring	3.0 x 225.0	1

Shaft seal

Pos.	Description	Description	95065478
1095	Intermediate ring MD250		1
1098	Mechanical shaft seal	∅60	1

Slotted nut

Pos.	Description	Dimensions	95038523
1106	Slotted nut KM10	M50 x 1.5	2
1107	Lock washer MB10	∅50	2

Water-in oil sensor

Pos.	Description	Dimensions	95038409
1049	Water-in-oil sensor		1
1173	Seal washer	17 x 23 x 1.5	1

Wear ring

Pos.	Description	Dimensions	Standard
			95037376
1097	Wear ring ceramic	∅125	1
1104	Lip seal	125 x 150 x 12	2
1108	O-ring	3.53 x 120.2	1
1108	O-ring	3.0 x 225.0	1
1108	O-ring	2.62 x 94.92	1

SRP.120.80 / SRP.160.80 / SRP.180.80 / SRP.200.80 / SRP.240.80 50 Hz
SRP.150.80 / SRP.180.80 / SRP.200.80 / SRP.240.80 60 Hz
SRP.204.32 / SRP.245.32 / SRP.272.32 / SRP.326.32 60 Hz North America

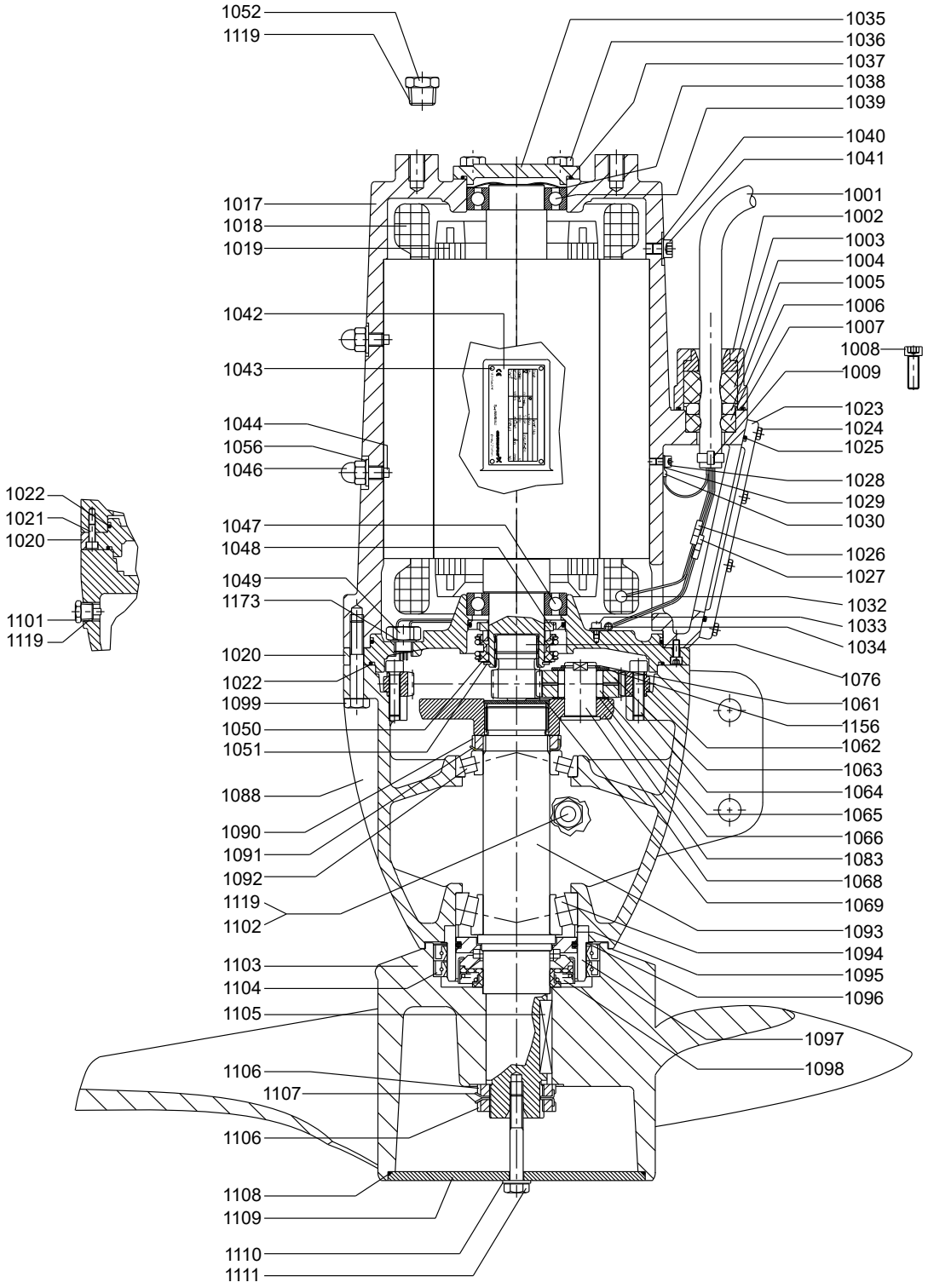

Cable

Pos.	Description	Dimensions	*95038520*	*95038521*	*95038522*
1001	Cable	7 x 4 + 4 x 1.0 mm^2 ∅20.5	10 m / 30 ft	15 m / 50 ft	25 m / 80 ft
1026	Cable joint	4.0 mm^2	6	6	6
1027	Cable joint	1.5 mm^2	4	4	4
1030	Cable shoe	4.0 mm^2/M6	1	1	1

Gear

Pos.	Description						
		50 Hz	-	SRP.120.80	SRP.160.80	SRP.180.80.387 SRP.200.80	SRP.180.80.417 SRP.240.80
		60 Hz SI	SRP.150.80	SRP.180.80.381 SRP.200.80	SRP.180.80.422 SRP.240.80	-	-
		60 Hz US	SRP.204.32	SRP.245.32.381 SRP.272.32	SRP.245.32.422 SRP.326.32	-	-
		Kit No	*95065525*	*95038611*	*95065496*	*95065521*	*95065522*
	Sun wheel PG250 Z=18 i = 5.16		1	-	-	-	-
	Sun wheel PG250 Z=21 i = 4.57		-	1	-	-	-
1060	Sun wheel PG250 Z=24 i = 4.12		-	-	1	-	-
	Sun wheel PG250 Z=27 i = 3.77		-	-	-	1	-
	Sun wheel PG250 Z=30 i = 3.50		-	-	-		1
1061	Retaining ring AS 28		3	3	3	3	3
1062	Ring gear PG250		1	1	1	1	1
	Planet gear PG250 i = 5.16		3	-	-	-	-
	Planet gear PG250 i = 4.57		-	3	-	-	-
1063	Planet gear PG250 i = 4.12		-	-	3	-	-
	Planet gear PG250 i = 3.77		-	-	-	3	-
	Planet gear PG250 i = 3.50		-	-	-	-	3
1065	Roller		108	108	108	108	108
1066	Washer PG250		3	3	3	3	3
1067	Planet carrier PG250		1	1	1	1	1
1068	Planet pin PG250		3	3	3	3	3
1069	Cover PG250		1	1	1	1	1
1156	Washer PG250		3	3	3	3	3

Impeller

Pos.	Description	800/55 Ø800
		95038710
1103	Impeller 800/55	1
1104	Lip seal	2
1105	Fit-in key	1
1106	Slotted nut KM10	2
1107	Lock washer MB10	2
1108	O-ring	1
1109	Hub cover MDR800	1
1110	Washer	1
1111	Hexagon head screw	1

SRP.120.80 / SRP.160.80 / SRP.180.80 / SRP.200.80 / SRP.240.80 50 Hz
SRP.150.80 / SRP.180.80 / SRP.200.80 / SRP.240.80 60 Hz
SRP.204.32 / SRP.245.32 / SRP.272.32 / SRP.326.32 60 Hz North America

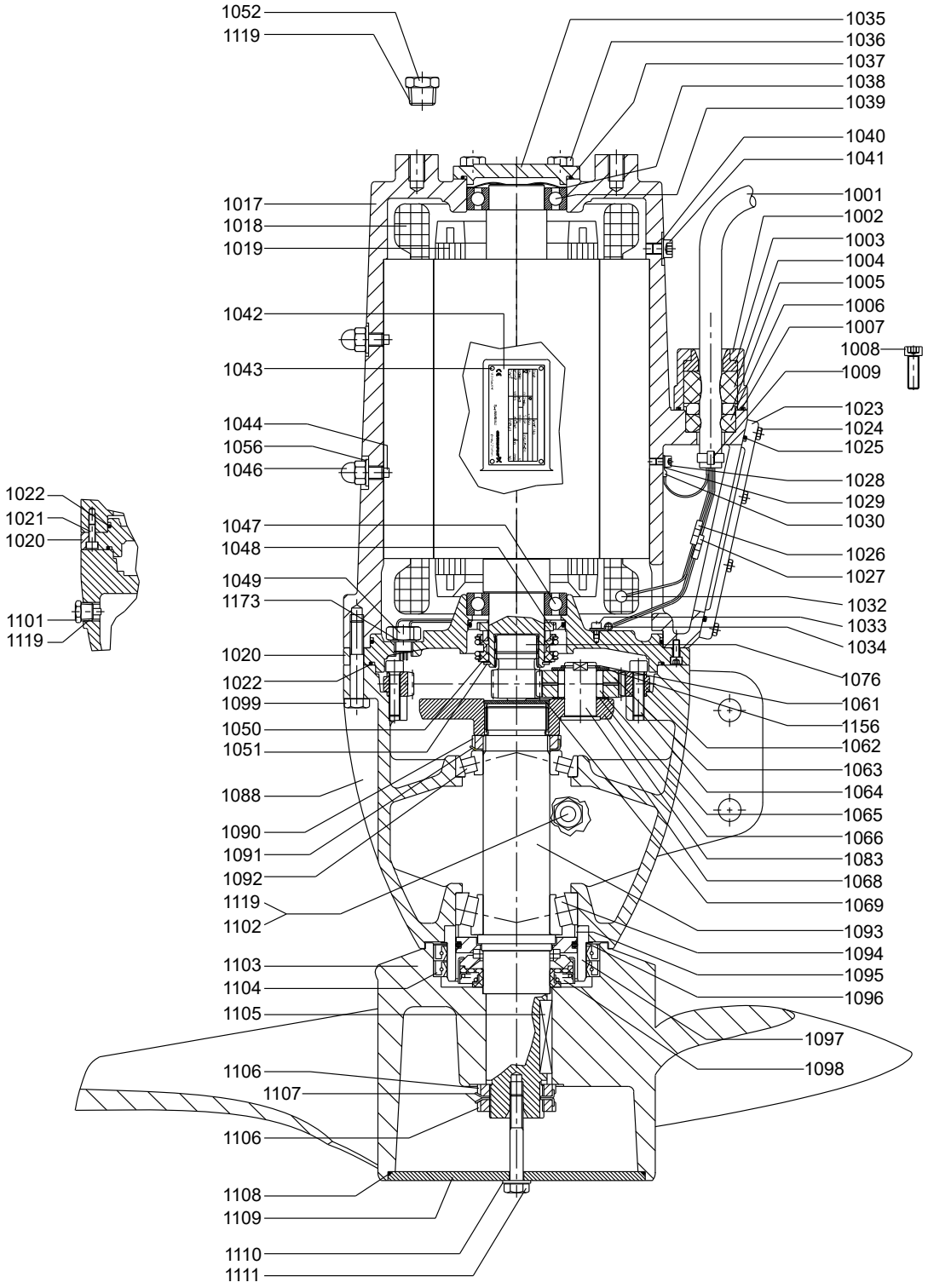

Motor

Pos.	Description			Non-Ex version		Ex version	
		50 Hz	-	SRP.120.80 SRP.160.80 SRP.180.80	SRP.200.80 SRP.240.80	SRP.120.80 SRP.160.80 SRP.180.80	SRP.200.80
		60 Hz SI	SRP.150.80 SRP.180.80	-	SRP.200.80 SRP.240.80	-	-
		60 Hz US	-	SRP.204.32 SRP.245.32	SRP.272.32 SRP.326.32	-	-
		Pole kW Hp Volt	4 pole 18.0 kW 24.5 Hp 380V	4 pole 18.0 kW 24.5 Hp 440-480V	4 pole 24.0 kW 32.6 Hp	4 pole 18.0 kW 24.5 Hp	4 pole 22.0 kW 30 Hp
		Kit No	*95038750*	*95038711*	*95038712*	*95038518*	*95038519*
1002	Cable flange MD160/250		1	1	1	1	1
1007	O-ring		1	1	1	1	1
1008	Cylinder head screw		2	2	2	2	2
1017	Motor housing		1	1	1	1	1
1018	Stator winded		1	1	1	1	1
1019	Rotor with shaft		1	1	1	1	1
1020	Motor flange		1	1	1	1	1
1021	Cylinder head screw		6	6	6	6	6
1022	O-ring		2	2	2	2	2
1023	Terminal box cover		1	1	1	1	1
1024	Hexagon head screw		8	8	8	8	8
1025	O-ring		1	1	1	1	1
1028	Cylinder head screw		1	1	1	1	1
1029	Lock washer M6		1	1	1	1	1
1033	Cylinder head screw		1	1	1	1	1
1034	Cable clamp		1	1	1	1	1
1035	Bearing cover		1	1	1	1	1
1036	Hexagon head screw		4	4	4	4	4
1037	O-ring		1	1	1	1	1
1038	Compensation disc		1	1	1	1	1
1039	Ball bearing SKF 6210.2RS1/C3 GJN		1	1	1	1	1
1040	U-Washer		1	1	1	1	1
1041	Cylinder head screw		1	1	1	1	1
1044	Set screw		2	2	2	2	2
1046	Nut		2	2	2	2	2
1047	Ball bearing SKF 6210.2RS1/C3 GJN		1	1	1	1	1
1048	Mechanical shaft seal		1	1	1	1	1
1049	Water-in-oil sensor		1	1	1	1	1
1050	Shim		1	1	1	1	1
1051	Retaining ring A 50		1	1	1	1	1
1052	Plug		1	1	1	1	1
1053	Connection for protective earthing		-	-	-	1	1
1056	Seal washer		2	2	2	2	2
1119	PTFE tape		1	1	1	1	1
1173	Seal washer		1	1	1	1	1

SRP.120.80 / SRP.160.80 / SRP.180.80 / SRP.200.80 / SRP.240.80 50 Hz
SRP.150.80 / SRP.180.80 / SRP.200.80 / SRP.240.80 60 Hz
SRP.204.32 / SRP.245.32 / SRP.272.32 / SRP.326.32 60 Hz North America

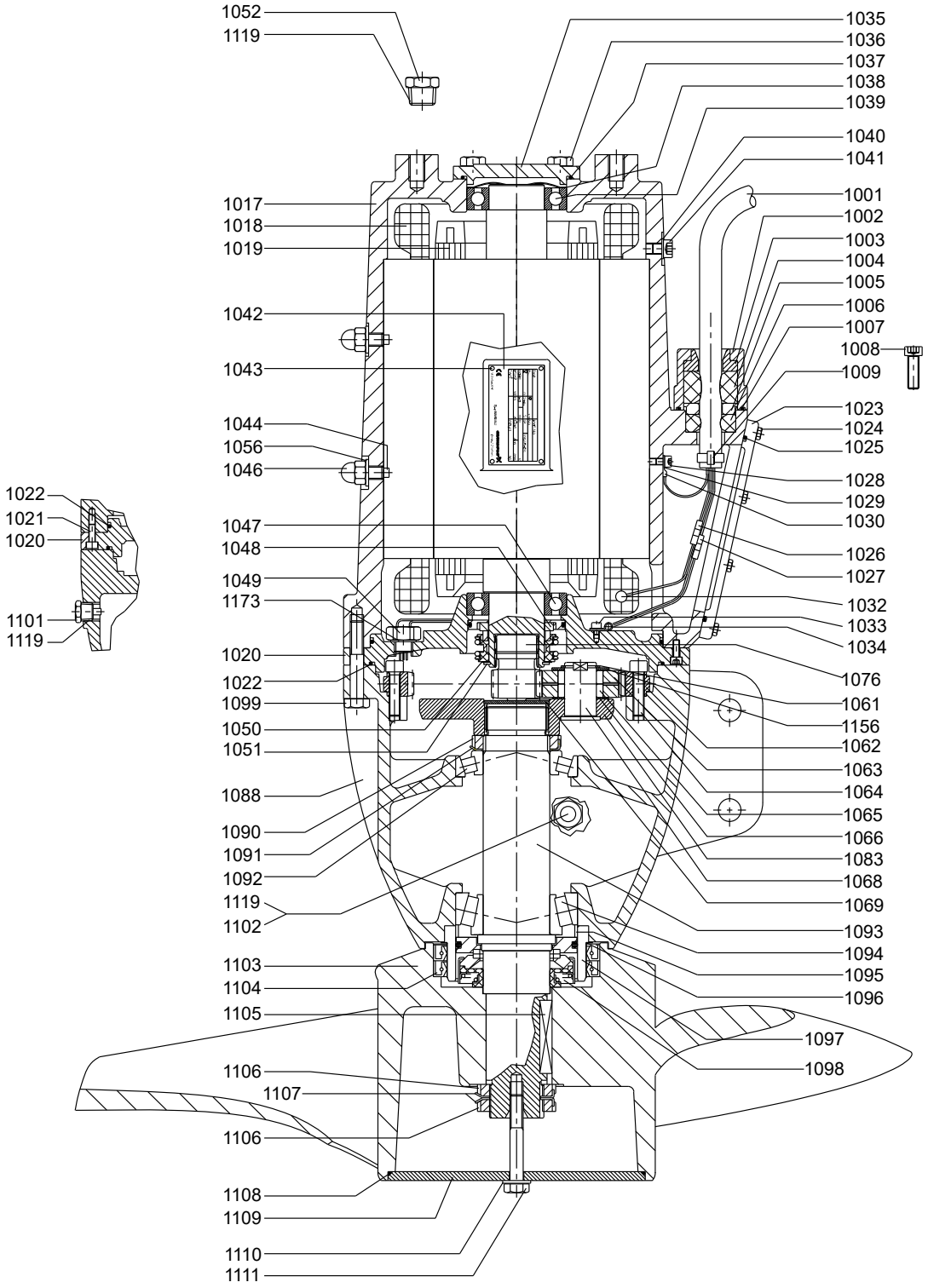

89. TP, TPE, TPD, TPED

TP Series 100 and 200

50/60 Hz

Shaft seal

model A

Pos.	Pump shaft diameter [mm]	12						
Pump type	25	All						
	32	-50/2 -80/2-90/2					-30 -60/2	
	40	-50/2 -80/2 -90/2					-30	
Pos.	Kit No	*96409293*	*96508806*	*96508807*	*96508808*	*96508809*	*96488632*	*96488634*
	Type	BUBE	BQQE	GQQE	BQQV	GQQV	BQQE	BQQV
72a	O-ring	1	1	1	1	1	1	1
105a	Shaft seal	1	1	1	1	1	1	1

Pos.	Pump shaft diameter [mm]	12		16		
Pump type	32	-30 -60/2		-40 -60/4 -80 -120 -150 -160 -180 -220 -230 -260 -330		
	40	-30		-40 -60 -80 -90/4 -120 -160 -180 -190 -230 -240 -270 -330 -390		
	50, 65, 80, 100	All				
Pos.	Kit No	*96409264*	*96432881*	*96409265*	*96409266*	*985844*
	Type	AUUE	RUUE/V	BUBE	AUUE	RUUE/V
72a	O-ring	1	1	1	1	1
105a	Shaft seal	1	1	1	1	1

model B

Pos.	Pump shaft diameter [mm]	12									
Pump type	25	-90						All			
	32	-90						-50/2 -80/2-90/2			
	40	-90						-50/2 -80/2 -90/2			
Pos.	Kit No	*98386336*	*98284949*	*98284950*	*98284961*	*98284962*	*98284936*	*96508806*	*96508807*	*96508808*	*96508809*
	Type	BUBV	BUBE	BQQE	GQQE	BQQV	GQQV	BQQE	GQQE	BQQV	GQQV
72a	O-ring	1	1	1	1	1	1	1	1	1	1
105a	Shaft seal	1	1	1	1	1	1	1	1	1	1

Wear parts, model A

Pump type	25	-50	-90				
	32			-50	-90	-60/2	
	40			-50	-90/2		60/4
Pos.	Description/kit No	*96408790*	*96408791*	*96408792*	*96408793*	*96414029*	*96436361*
9	Coupling screw	4	4	4	4	4	4
10	Coupling pin	1	1	1	1	1	1
48	Split cone nut	-	-	-	-	-	-
49b	Split cone	-	-	-	-	-	-
51	Shaft	-	-	-	-	-	-
	Shaft with split cone and impeller	1	1	1	1	1	1
71	Distributing cup	-	-	-	-	-	-

Pump type	32	-30	-40 (USA) -80 -120 -160	-40 -60/4 -150 -180 -220 - 230 -260 -330	
	40	-30	-40 -60/2 -80/2 -120	-80/4 -90/4 -160 -180 -190 - 230 -240 -270 -330 -390	
	50		-30 -40 -60/2 -80/2	-60/4 -80/4 -120 -160 -180 -240	
	65		-60/2 -80/2	-30 -40 -60/4 -80/4 -180 -240	-120 -160
	80			-40 (USA) -80 (USA) -120 -160 -240 (USA)	-30 -40 -60 -80 -160 (USA)
	100			-160	All except -160
Pos.	**Description/kit No**	***96414027***	***96414028***	***96414031***	***96409269***
9	Coupling screw	4	4	4	4
10	Coupling pin	1	1	1	1
48	Split cone nut	1	1	1	1
49b	Split cone	1	1	1	1
51	Shaft	1	1	1	1
71	Distributing cup	1	1	1	1

TP Series 100 and 200

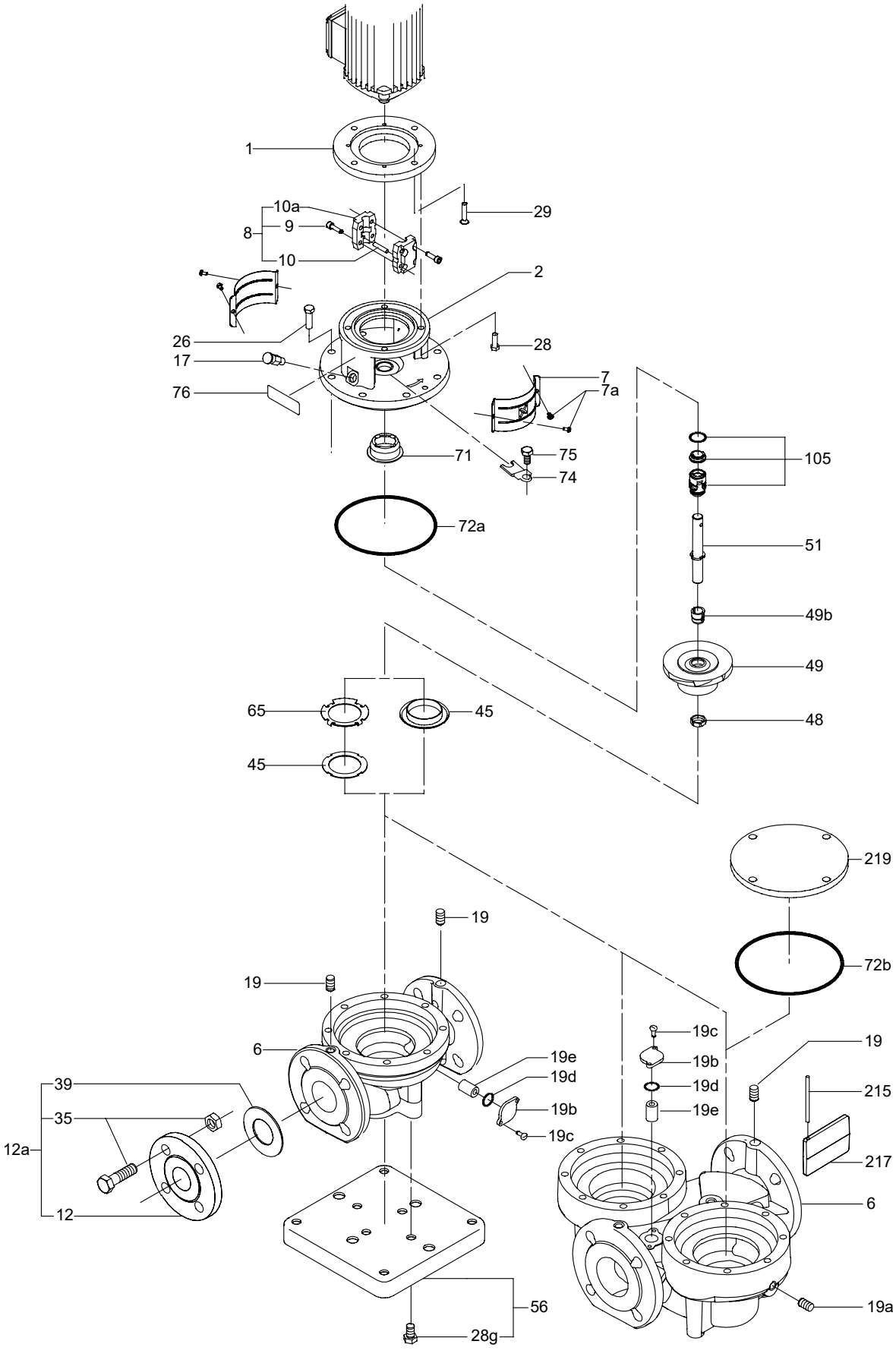

Wear parts, model B

TP

Pump type	25	-50	-80			-90
	32			-50	-80	-90
	40			-50	-80	-90
Pos.	Description/kit No	*98284938*	*98284939*	*98284941*	*98284942*	*98284940*
9	Coupling screw	4	4	4	4	4
10	Coupling pin	1	1	1	1	1
48	Split cone nut	-	-	-	-	1
49b	Split cone	-	-	-	-	1
51	Shaft	-	-	-	-	1
	Shaft with split cone and impeller	1	1	1	1	-
71	Distributing cup	-	-	-	-	1

TPE

Pump type	25	-50	-80			-90
	32			-50	-80	-90
	40			-50	-80	-90
Pos.	Description/kit No	*98284943*	*98284944*	*98284945*	*98284946*	*98284940*
9	Coupling screw	4	4	4	4	4
10	Coupling pin	1	1	1	1	1
48	Split cone nut	-	-	-	-	1
49b	Split cone	-	-	-	-	1
51	Shaft	-	-	-	-	1
	Shaft with split cone and impeller	1	1	1	1	-
71	Distributing cup	-	-	-	-	1

Coupling complete

Pos.	Kit No	*495081*	*415060*	*339114*	*339119*	*339124*	*339128*	*485133*	*485134*
	Motor/pump shaft diameter [mm]	11/12	14/12	14/16	19/16	24/16	28/16	15.9/16	28.6/16
	Description							NEMA	NEMA
8	Coupling half	2	2	2	2	2	2	2	2
9	Screw	4	4	4	4	4	4	4	4
10	Pin	1	1	1	1	1	1	1	1

Non-return valve

Pos.	Pump type	TPD 32	TPD 40	TPD 50	TPD 65	TPD 80	TPD 100
	Description/kit No	*96407253*	*96407254*	*96407255*	*96407256*	*96407257*	*96407258*
215	Guide pin	1	1	1	1	1	1
217	Valve flap	1	1	1	1	1	1

TP Series 100 and 200

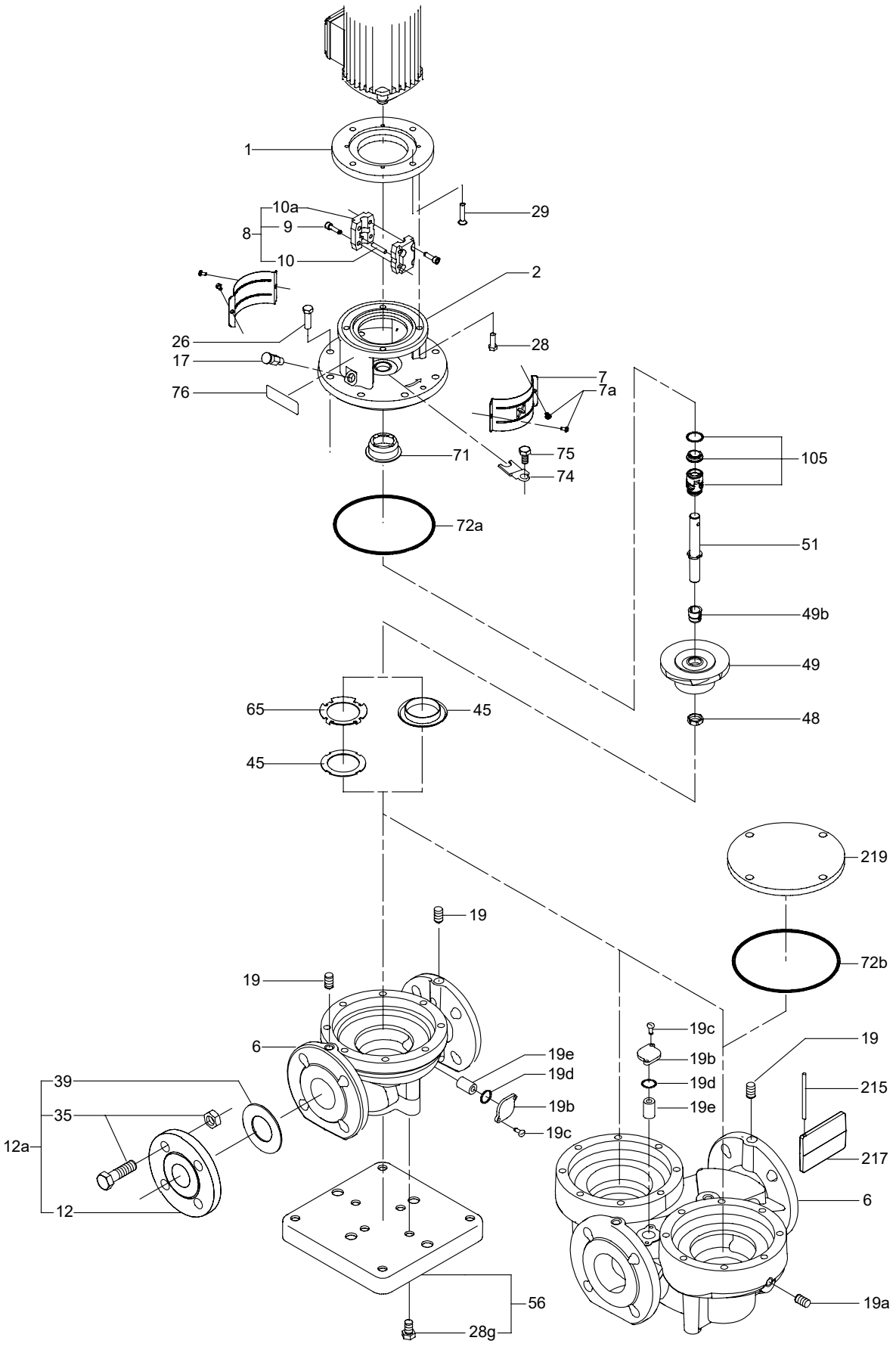

TP Series 300

Shaft diameter

TP	Poles	Pump type	Shaft diameter [mm]
32-	2, 4	All	28
40-		All	
50-		All	
65-		All	
80-	2	All	
	4	70, 90, 110, 150, 170	
		230, 240, 270, 280, 340, 410, 460, 510	38
100-	2	160, 200, 230, 240, 250, 300, 310, 350, 360, 370, 380, 390	28
		480, 530, 630, 700	38
	4	70, 90, 110	28
		130, 170, 200, 240, 250, 290, 330, 340, 370, 390, 410, 470	
125-	4, 6	All	38
150-	4	130, 160, 200, 220, 250,	
	6	60, 70, 90, 110	
	4	260, 280, 340, 360, 390, 400, 460, 500	48
200-	4	180, 220, 250, 270, 290, 330, 320, 360, 400, 410, 430, 440, 470, 490, 500, 530, 540, 590, 600, 660, 680, 770	55

Shaft seal

Pos.	Type/shaft diameter [mm]	28	38	48	55	60
105a	BAQE	*96488302*	*96537605*	*96306472*	*96306475*	*96658812*
	BAQV	*96548353*	*96548357*	*96658791*	*96658801*	*96658815*
	BQQE	*98434904*	*98434906*	*98434909*	*98434943*	*98434945*
	BQQV	*98434905*	*98434908*	*98434941*	*98434944*	*98434947*
	BQQV for PWIS free	*98670789*	*98670790*	*98670801*	*98670802*	*98670803*
	BBQE	*96551963*	*96551928*	*96658794*	*96658804*	*96658818*
	GQQE	*96488303*	*96537606*	*96306474*	*96306477*	*96658814*
	GQQV	*96504870*	*96537608*	*96658793*	*96658803*	*96658817*
	DAQF	*96548355*	*96548359*	*96658796*	*96658807*	*96658820*
	AQQE	*96551965*	*96551960*	*96658799*	*96658810*	*96658823*
	AQQV	*96551967*	*96551962*	*96658800*	*96658811*	*96658824*
	AQAE	*96551964*	*96551929*	*96658797*	*96658808*	*96658821*
	AQAV	*96551966*	*96551961*	*96658798*	*96658809*	*96658822*
	DQQE	-	*97769897*	*97685509*	*97685596*	*97685598*
	DQQV	-	*97769901*	*97685511*	*97685600*	*97685602*
	DAUE	-	*98903218*	*98903219*	*98903220*	*98903221*

Spacer ring for shaft seal (pos. 105b and 105c)

28, 48, 55 and 60 mm	38 mm	
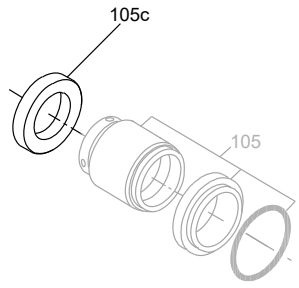	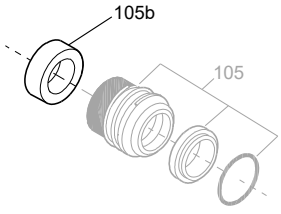	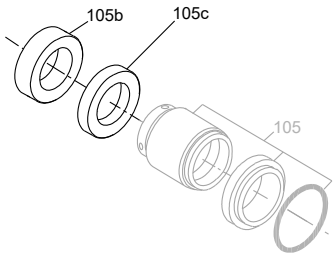
HJ92N, M7N	*MG13, RMG13*	*HJ92N, M7N*

Pos.	Shaft seal diameter [mm]	Description	Length [mm]	Kit No
105b	38	Spacer ring	15.5	*96591277*
105c	28		7.5	*96938597*
	38		10	*96938599*
	48		15	*96938602*
	55		22.5	*96938604*
	60		17.5	*96938606*
105b and 105c	38		15.5	*96930797*
			10	

Non-return valve, TPD, TPED

Pos.	Pump type	32, 40, 50	65	80	100, 125	125, 150
	Cover No*	***96476895***	***96476895***	***96506492/93***	***96506494***	***96506495***
	Description/kit No	***96488633***	***96488631***	***96537612***	***96537613***	***96537614***
211	Screw	6	6	6	6	6
212	Gasket	1	1	2	1	1
215	Shaft pin	1	1	1	1	1
216	Spring	1	1	1	1	1
217	Valve flap	2	2	2	2	2
	Pipe plug	1	1	1	1	1

* Indicated on back of cover

Nut for impeller

Pos.	Shaft diameter [mm]	28	38	48	55
	Description/kit No	***96939128***	***96939134***	***96939132***	***96939134***
67	Nut	1	1	1	1
11	Key	1	1	1	1
66a	Spring lock washer M24	1	1	1	1
66	Washer	1	1	1	1

Shaft

Containing shaft (pos. 51), nut (pos. 67), key (pos. 11), washer (pos. 66), spring washer (pos. 66a) and fixing screws (pos. 9).

Pump with 28 mm shaft								
IEC frame size	71	80	90	100 - 112	132	160	180	200
Kit No	*96039349*	*96039350*	*96039351*	*96039352*	*96039353*	*96039354*	*96039355*	*96039356*

Pump with 38 mm shaft							
IEC frame size	100 - 112	132	160	180	200	225 - 250	225 (2-pole)
Kit No	*96039357*	*96039358*	*96039359*	*96039360*	*96039361*	*96537609*	*96537610*

Pump with 48 mm shaft			
IEC frame size	180	200	225
Kit No	*96306478*	*96306478*	*96306479*

Pump with 55 mm shaft						
IEC frame size	180	200	225	250	280	315
Kit No	*96306488*	*96306488*	*96306480*	*96306480*	*96306480*	*96306480*

Wear ring

Pos.	Description/Pump type	TP 150	TP 200
45	Wear ring (in pump housing)	96810109	96810112
45	Wear ring (in cover)	*96797628*	*96810112*

Coupling guard

Pump type		P2 [kW]	Kit No
TP 150-	260/4	18.5	*96809945*
	280/4	22	
	340/4	30	*96956201*
	360/4	30	
	390/4	37	*96956222*
	400/4	37	
TP 200-	180/4	22	
	220/4	30	
	250/4	37	
	270/4	45	
	290/4	45	
	320/4	55	*96809946*
	330/4	37	*96956222*
	330/4	55	*96809946*
	360/4	45	*96956222*
	400/4	55	*96809946*
	400/4	75	
	410/4	75	
	430/4	55	
	440/4	90	
	470/4	75	
	500/4	110	*96956222/ 96809946**
	530/4	90	*96809946*
	540/4	90	
	590/4	110	*96956222/ 96809946**
	600/4	110	
	660/4	132	*96956222*
	680/4	132	
	770/4	160	

* For pumps with TECO motor (IEC280).

Content

Pos.	Description
7	Coupling guard
7a	Screw

Motor bush

Pump type		P2 [kW]	Kit No
TP 150-	260/4	18.5	*96306481*
	280/4	22	
	340/4	30	*96306482*
	360/4	30	
	390/4	37	*96306483*
	400/4	37	
TP 200-	180/4	22	*96306481*
	220/4	30	*96306482*
	250/4	37	*96306483*
	270/4	45	
	290/4	45	
	320/4	55	*96306484/ 96810023**
	330/4	37	*96306483*
	330/4	55	*96306484*
	360/4	45	*96306483*
	400/4	55	*96306484/ 96810023**
	400/4	75	*96306485*
	410/4	75	*96306485/ 96810023**
	430/4	55	*96306484*
	440/4	90	*96306485*
	470/4	75	*96306485/ 96810023**
	500/4	110	*96306486*
	530/4	90	*96306485/ 96306486**
	540/4	90	*96306485*
	590/4	110	*96306486*
	600/4	110	
	660/4	132	*96306486/ 96306487**
	680/4	132	
	770/4	160	

* For pumps with TECO-motor (IEC315).

Content

Pos.	Description
8a	Motor bush
23	Hexagon socket head cap screw
9	Hexagon socket set screw

Intermediate ring

Only for pumps with TECO motor (IEC280).

Pump type		P2 [kW]	Kit No
TP 200-	440/4	90	*96832916*
	500	110	
	530/4	90	
	540/4	90	
	590/4	110	
	600/4	110	

Content

Pos.	Description
1	Intermediate ring
28	Hexagon head screw M16
36a	Hexagon nut M16

TP Series 300

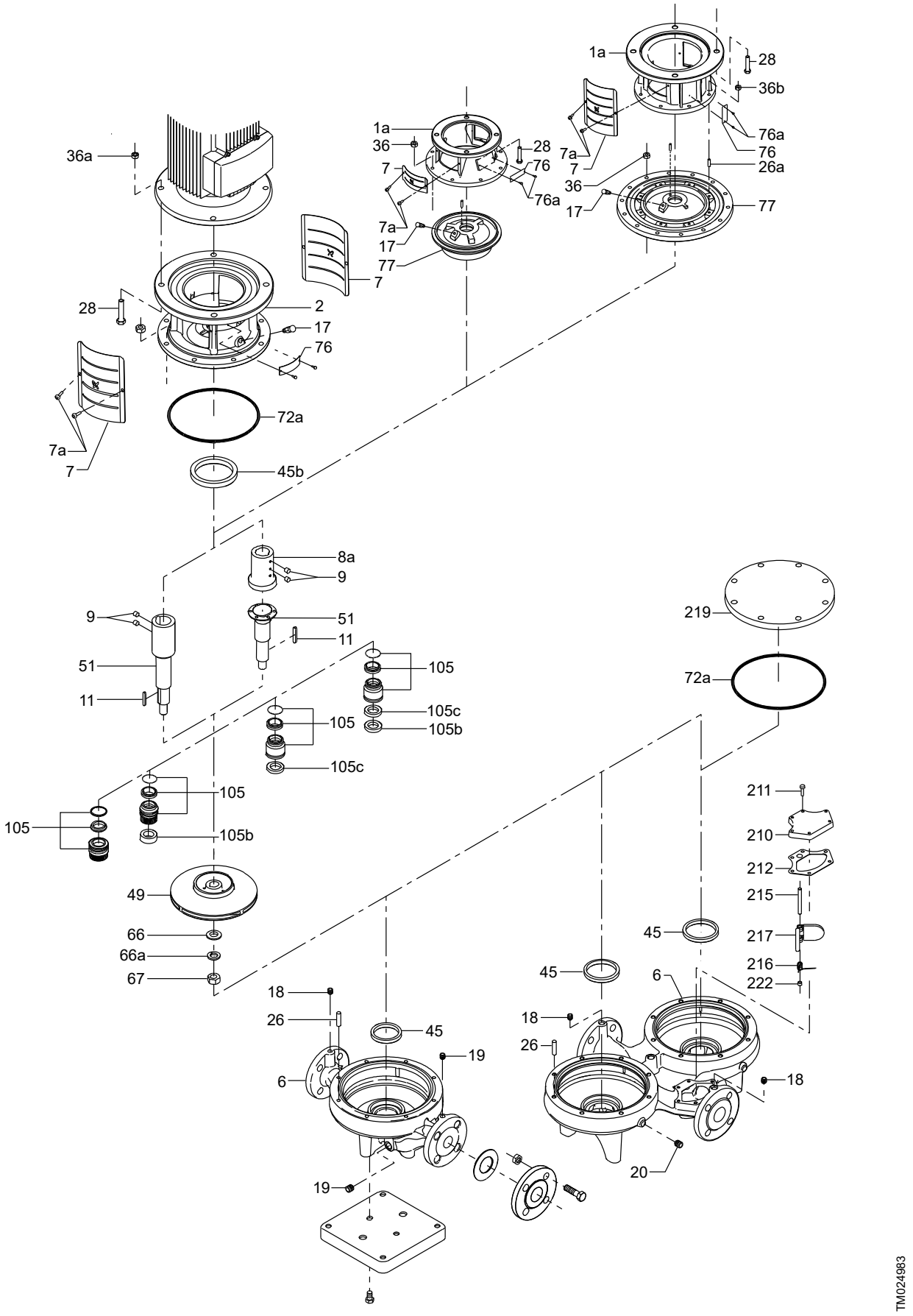

O-ring
50 Hz

2-pole		4-pole		6-pole		O-ring, pos. 72a		
Pump type	P2 [kW]	Pump type	P2 [kW]	Pump type	P2 [kW]	V (FKM)	E (EPDM)	F (FXM)
-	-	TP 32-80/4	0.25	-	-	*97757697*	*97757659*	*97790022*
-	-	TP 32-100/4	0.37	-	-			
TP 32-200/2	1.1	-	-	-	-			
TP 32-250/2	1.5	-	-	-	-			
TP 32-320/2	2.2	-	-	-	-			
TP 32-380/2	3	-	-	-	-			
TP 32-460/2	4	TP 32-120/4	0.55	-	-	*97757698*	*97757671*	*97790080*
TP 32-580/2	5.5	-	-	-	-			
TP 40-240/2	2.2	TP 40-100/4	0.55	-	-	*97757697*	*97757659*	*97790022*
TP 40-300/2	3	-	-	-	-			
TP 40-360/2	4	-	-	-	-			
TP 40-470/2	5.5	TP 40-130/4	0.75	-	-	*97757698*	*97757671*	*97790080*
TP 40-580/2	7.5	TP 40-160/4	1.1	-	-			
TP 40-430/2	5.5	TP 40-110/4	0.75	-	-			
TP 40-530/2	7.5	TP 40-140/4	1.1	-	-			
TP 40-630/2	11	-	-	-	-			
TP 50-160/2	1.1	-	-	-	-	*97757697*	*97757659*	*97790022*
TP 50-190/2	1.5	-	-	-	-			
TP 50-240/2	2.2	-	-	-	-			
TP 50-290/2	3	-	-	-	-			
TP 50-360/2	4	TP 50-90/4	0.55	-	-	*97757697*	*97757659*	*97790022*
TP 50-430/2	5.5	-	-	-	-			
TP 50-420/2	7.5	TP 50-80/4	0.75	-	-	*97757699*	*97757672*	*97790081*
TP 50-540/2	11	TP 50-120/4	1.1	-	-			
TP 50-630/2	15	TP 50-140/4	1.5	-	-			
TP 50-440/2	7.5	TP 50-110/4	0.75	-	-			
TP 50-570/2	11	TP 50-130/4	1.1	-	-			
TP 50-710/2	15	TP 50-160/4	1.5	-	-			
TP 50-830/2	18.5	TP 50-190/4	2.2	-	-			
TP 50-900/2	22	TP 50-230/4	3	-	-			
TP 65-170/2	2.2	-	-	-	-	*97757697*	*97757659*	*97790022*
TP 65-210/2	3	-	-	-	-			
TP 65-250/2	4	-	-	-	-			
TP 65-190/2	2.2	TP 65-90/4	0.75	-	-			
TP 65-230/2	3	-	-	-	-			
TP 65-260/2	4	-	-	-	-			
TP 65-340/2	5.5	-	-	-	-			
TP 65-410/2	7.5	-	-	-	-			
TP 65-460/2	11	TP 65-110/4	1.1	-	-	*97757699*	*97757672*	*97790081*
TP 65-550/2	15	TP 65-130/4	1.5	-	-			
TP 65-660/2	18.5	TP 65-150/4	2.2	-	-			
TP 65-720/2	22	TP 65-170/4	3	-	-			
TP 65-930/2	30	TP 65-240/4	4	-	-			
TP 80-140/2	2.2	-	-	-	-	*97757697*	*97757659*	*97790022*
TP 80-180/2	3	-	-	-	-			
TP 80-210/2	4	-	-	-	-			
TP 80-240/2	5.5	-	-	-	-			

2-pole		4-pole		6-pole		O-ring, pos. 72a		
Pump type	P2 [kW]	Pump type	P2 [kW]	Pump type	P2 [kW]	V (FKM)	E (EPDM)	F (FXM)
TP 80-250/2	7.5	TP 80-70/4	1.1	-	-	*97757697*	*97757659*	*97790022*
TP 80-330/2	11	TP 80-90/4	1.5	-	-			
TP 80-400/2	15	TP 80-110/4	2.2	-	-			
TP 80-520/2	18.5	TP 80-150/4	3	-	-	*97757698*	*97757671*	*97790080*
TP 80-570/2	22	TP 80-170/4	4	-	-			
TP 80-700/2	30	-	-	-	-			
-	-	TP 80-240/4	5.5	-	-	*97757698*	*97757671*	*97790080*
-	-	TP 80-270/4	7.5	-	-			
-	-	TP 80-340/4	11	-	-			
TP 100-160/2	4	-	-	-	-	*97757697*	*97757659*	*97790022*
TP 100-200/2	5.5	-	-	-	-			
TP 100-240/2	7.5	-	-	-	-			
TP 100-250/2	11	TP 100-70/4	1.5	-	-	*97757697*	*97757659*	*97790022*
TP 100-310/2	15	TP 100-90/4	2.2	-	-			
TP 100-360/2	18.5	TP 100-110/4	3	-	-			
TP 100-390/2	22	-	-	-	-			
TP 100-480/2	30	TP 100-130/4	4	-	-	*97757698*	*97757671*	*97790080*
-	-	TP 100-170/4	5.5	-	-			
-	-	TP 100-200/4	7.5	-	-	*97757705*	*97757675*	*96887764*
-	-	TP 100-250/4	11	-	-			
-	-	TP 100-330/4	15	-	-			
-	-	TP 100-370/4	18.5	-	-			
-	-	TP 100-410/4	22	-	-			
-	-	TP 125-60/4	2.2	-	-	*97757697*	*97757659*	*97790022*
-	-	TP 125-80/4	3	-	-			
-	-	TP 125-95/4	4	-	-			
-	-	TP 125-70/4	2.2	-	-	*97757697*	*97757659*	*97790022*
-	-	TP 125-90/4	3	-	-			
-	-	TP 125-100/4	4	-	-			
-	-	TP 125-110/4	4	TP 125-60/6	1.5	*97757698*	*97757671*	*97790080*
-	-	TP 125-130/4	5.5	TP 125-70/6	2.2			
-	-	TP 125-160/4	7.5	-	-			
-	-	TP 125-190/4	11	TP 125-80/6	3	*97757705*	*97757675*	*96887764*
-	-	TP 125-230/4	15	TP 125-100/6	4			
-	-	TP 125-210/4	11	TP 125-90/6	3			
-	-	TP 125-250/4	15	TP 125-110/6	4			
-	-	TP 125-300/4	18.5	TP 125-130/6	5.5			
-	-	TP 125-340/4	22	TP 125-160/6	7.5			
-	-	TP 125-400/4	30	-	-			
-	-	TP 125-320/4	18.5	TP 125-140/6	5.5	*97757705*	*97757675*	*96887764*
-	-	TP 125-360/4	22	TP 125-170/6	7.5			
-	-	TP 125-420/4	30	-	-			
-	-	TP 150-70/4	5.5	-	-	*97757698*	*97757671*	*97790080*
-	-	TP 150-110/4	7.5	-	-			
-	-	TP 150-155/4	11	-	-			
-	-	TP 150-170/4	15	-	-			
-	-	TP 150-130/4	7.5	TP 150-60/6	2.2	*97757703*	*97757673*	*96887763*
-	-	TP 150-160/4	11	TP 150-70/6	3			
-	-	TP 150-200/4	15	TP 150-90/6	4			
-	-	TP 150-220/4	18.5	TP 150-110/6	5.5			
-	-	TP 150-250/4	22	-	-			

2-pole		4-pole		6-pole		O-ring, pos. 72a		
Pump type	P2 [kW]	Pump type	P2 [kW]	Pump type	P2 [kW]	V (FKM)	E (EPDM)	F (FXM)
-	-	TP 150-260/4	18.5	-	-	97757705	97757675	96887764
-	-	TP 150-280/4	22	-	-			
-	-	TP 150-340/4	30	-	-			
-	-	TP 150-390/4	37	-	-			
-	-	TP 200-50/4	4	-	-	97757698	97757671	97790080
-	-	TP 200-70/4	5.5	-	-			
-	-	TP 200-90/4	7.5	-	-			
-	-	TP 200-130/4	11	-	-			
-	-	TP 200-150/4	15	-	-			
-	-	TP 200-160/4	15	-	-	97757703	97757673	96887763
-	-	TP 200-190/4	18.5	-	-			
-	-	TP 200-200/4	22	-	-			
-	-	TP 200-240/4	30	-	-			
-	-	TP 200-290/4	37	-	-			
-	-	TP 200-180/4	22	-	-	97757705	97757675	96887764
-	-	TP 200-220/4	30	-	-			
-	-	TP 200-250/4	37	-	-			
-	-	TP 200-270/4	45	-	-			
-	-	TP 200-320/4	55	-	-			
-	-	TP 200-410/4	75	-	-			
-	-	TP 200-330/4	37	-	-	97757705	97757676	96887764
-	-	TP 200-360/4	45	-	-			
-	-	TP 200-400/4	55	-	-			
-	-	TP 200-470/4	75	-	-			
-	-	TP 200-530/4	90	-	-			
-	-	TP 200-590/4	110	-	-			
-	-	TP 200-660/4	132	-	-			

60 Hz

2-pole		4-pole		O-ring, pos. 72a		
Pump type	P2 [kW]	Pump type	P2 [kW]	V (FKM)	E (EPDM)	F (FXM)
-	-	TP 32-120/4	0.55	97757698	97757671	97790080
-	-	TP 32-140/4	0.75			
-	-	TP 32-190/4	1.1			
TP 32-300/2	2.2	-	-			
TP 32-360/2	3	-	-			
TP 32-450/2	4	-	-			
TP 32-550/2	5.5	-	-			
TP 32-680/2	7.5	-	-			
TP 32-820/2	11	-	-			
TP 40-370/2	4	TP 40-120/4	0.75	97757698	97757671	97790080
TP 40-450/2	5.5	TP 40-160/4	1.1			
TP 40-550/2	7.5	TP 40-190/4	1.5			
TP 40-740/2	11	TP 40-220/4	2.2			
TP 40-850/2	15	-	-			
TP 40-930/2	18.5	-	-			
TP 40-400/2	4	TP 40-110/4	0.75			
TP 40-460/2	5.5	TP 40-150/4	1.1			
TP 40-530/2	7.5	TP 40-180/4	1.5			
TP 40-690/2	11	TP 40-230/4	2.2			
TP 40-820/2	15	-	-			
TP 40-920/2	18.5	-	-			

2-pole		4-pole		O-ring, pos. 72a		
Pump type	P2 [kW]	Pump type	P2 [kW]	V (FKM)	E (EPDM)	F (FXM)
TP 50-250/2	2.2	-	-	97757697	97757659	97790022
TP 50-300/2	3	-	-			
TP 50-350/2	4	-	-	97757697	97757659	97790022
TP 50-410/2	5.5	-	-			
TP 50-440/2	7.5	TP 50-110/4	0.75	97757699	97757672	97790081
TP 50-540/2	11	TP 50-120/4	1.1			
TP 50-720/2	15	TP 50-140/4	1.5			
TP 50-430/2	7.5	TP 50-100/4	0.75			
TP 50-530/2	11	TP 50-115/4	1.1			
TP 50-640/2	15	TP 50-130/4	1.5			
-	-	TP 50-180/4	2.2			
TP 50-790/2	18.5	TP 50-190/4	2.2			
TP 50-880/2	22	TP 50-240/4	3			
TP 50-1050/2	30	TP 50-270/4	4			
-	-	TP 50-340/4	5.5			
TP 65-220/2	3	-	-	97757697	97757659	97790022
TP 65-260/2	4	-	-			
TP 65-200/2	3	-	-			
TP 65-250/2	4	-	-			
TP 65-340/2	5.5	-	-			
TP 65-390/2	7.5	-	-			
TP 65-480/2	11	TP 65-130/4	1.5	97757699	97757672	97790081
TP 65-540/2	15	TP 65-150/4	2.2			
TP 65-630/2	18.5	TP 65-190/4	3			
TP 65-740/2	22	TP 65-230/4	4			
TP 65-910/2	30	TP 65-310/4	5.5			
TP 65-1050/2	37	TP 65-330/4	7.5			
TP 80-200/2	4	-	-	97757697	97757659	97790022
TP 80-240/2	5.5	-	-			
TP 80-290/2	7.5	-	-			
TP 80-330/2	11	TP 80-110/4	2.2	97757697	97757659	97790022
TP 80-400/2	15	-	-			
TP 80-480/2	18.5	TP 80-150/4	3	97757698	97757671	97790080
TP 80-530/2	22	TP 80-170/4	4			
TP 80-640/2	30	-	-			
TP 80-750/2	37	-	-			
-	-	TP 80-230/4	5.5			
-	-	TP 80-280/4	7.5			
-	-	TP 80-340/4	11			
-	-	TP 80-410/4	15			
-	-	TP 80-460/4	18.5			
-	-	TP 80-510/4	22	97757698	97757671	97790080
TP 100-230/2	7.5	-	-			
TP 100-300/2	11	-	-			
TP 100-370/2	15	-	-			
TP 100-350/2	18.5	TP 100-100/4	3			
TP 100-380/2	22	-	-			
TP 100-530/2	30	TP 100-130/4	4	97757697	97757659	97790022
TP 100-630/2	37	TP 100-170/4	5.5			
TP 100-700/2	45	-	-	97757697	97757659	97790022

2-pole		4-pole		O-ring, pos. 72a		
Pump type	P2 [kW]	Pump type	P2 [kW]	V (FKM)	E (EPDM)	F (FXM)
-	-	TP 100-200/4	7.5	*97757705*	*97757675*	*96887764*
-	-	TP 100-240/4	11			
-	-	TP 100-350/4	22			
-	-	TP 100-290/4	15			
-	-	TP 100-340/4	18.5			
-	-	TP 100-390/4	22			
-	-	TP 100-470/4	30			
-	-	TP 125-80/4	3.0	*97757697*	*97757659*	*97790022*
-	-	TP 125-110/4	4.0			
-	-	TP 125-135/4	5.5			
-	-	TP 125-100/4	3.0			
-	-	TP 125-120/4	4.0			
-	-	TP 125-140/4	5.5			
-	-	TP 125-130/4	5.5	*97757698*	*97757671*	*97790080*
-	-	TP 125-160/4	7.5			
-	-	TP 125-200/4	11			
-	-	TP 125-230/4	15			
-	-	TP 125-210/4	11	*97757705*	*97757675*	*96887764*
-	-	TP 125-220/4	15			
-	-	TP 125-280/4	18.5			
-	-	TP 125-340/4	22			
-	-	TP 125-365/4	30			
-	-	TP 125-260/4	15			
-	-	TP 125-320/4	18.5			
-	-	TP 125-360/4	22			
-	-	TP 125-420/4	30			
-	-	TP 125-480/4	37			
-	-	TP 125-430/4	30			
-	-	TP 125-490/4	37			
-	-	TP 150-130/4	11	*97757698*	*97757671*	*97790080*
-	-	TP 150-160/4	15			
-	-	TP 150-200/4	18.5			
-	-	TP 150-220/4	22			
-	-	TP 150-170/4	11	*97757698*	*97757671*	*97790080*
-	-	TP 150-190/4	15			
-	-	TP 150-230/4	18.5			
-	-	TP 150-250/4	22			
-	-	TP 150-180/4	15	*97757703*	*97757673*	*96887763*
-	-	TP 150-210/4	18.5			
-	-	TP 150-240/4	22			
-	-	TP 150-300/4	30			
-	-	TP 150-340/4	37			
-	-	TP 150-360/4	30	*97757705*	*97757675*	*96887764*
-	-	TP 150-400/4	37			
-	-	TP 150-440/4	45	*97757707*	*97757676*	*96887765*
-	-	TP 150-480/4	55			
-	-	TP 150-610/4	75			
-	-	TP 150-700/4	90			
-	-	TP 150-810/4	110			
-	-	TP 150-960/4	132			
-	-	TP 200-270/4	37	*97757705*	*97757675*	*96887764*

2-pole		4-pole		O-ring, pos. 72a		
Pump type	P2 [kW]	Pump type	P2 [kW]	V (FKM)	E (EPDM)	F (FXM)
-	-	TP 200-80/4	7.5	*97757698*	*97757671*	*97790080*
-	-	TP 200-110/4	11			
-	-	TP 200-140/4	15			
-	-	TP 200-190/4	18.5			
-	-	TP 200-210/4	22			
-	-	TP 200-250/4	30	*97757703*	*97757673*	*96887763*
-	-	TP 200-280/4	37			
-	-	TP 200-320/4	45			
-	-	TP 200-360/4	55			
-	-	TP 200-390/4	75			
-	-	TP 200-290/4	45	*97757705*	*97757675*	*96887764*
-	-	TP 200-330/4	55			
-	-	TP 200-400/4	75			
-	-	TP 200-440/4	90			
-	-	TP 200-500/4	110			
-	-	TP 200-430/4	55	*97757707*	*97757676*	*96887765*
-	-	TP 200-490/4	75			
-	-	TP 200-540/4	90			
-	-	TP 200-600/4	110			
-	-	TP 200-680/4	132			
-	-	TP 200-770/4	160			

TP Series 300

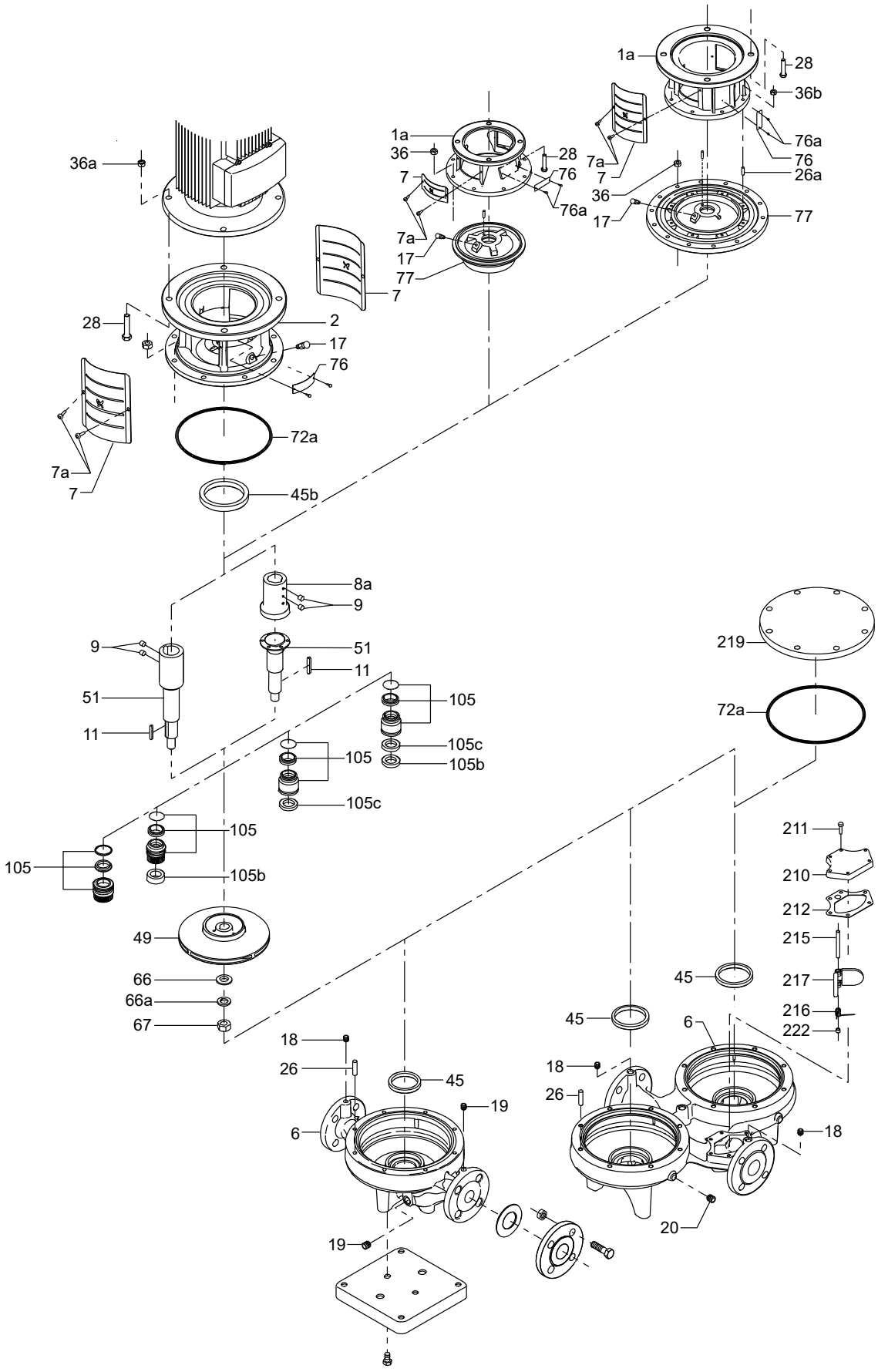

TP Series 400

DN 65 - DN 250

Air vent screw

Pos.	Description/kit No	*96121641*
17	Air vent screw	1

Impeller screw

Pos.	Description/kit No	*96121643*
68	Screw M8 x 30	1
	Screw M12 x 40	1
	Screw M16 x 50	1

Shaft seal, 10 bar

The kits include the shaft seal (pos. 105) and a mounting cone.

Pump type		Shaft diameter [mm]
TP 100-	650/2	40
	600/4	45
TP 125-	540/4	55
	570/2, 730/2, 810/2	45
TP 150-	310/4, 370/4, 380/4, 420/4, 490/4, 550/4	55
TP 200-	260/4, 280/4, 300/4, 320/4, 350/4, 380/4, 390/4, 430/4, 520/4, 570/4	60
TP 250-	280/4, 310/4, 390/4, 450/4, 530/4, 580/4	

Type/shaft diameter [mm]	40	45	50	55	60
BAQE	*96161882*	*96161883*	*96161885*	*96161884*	*96161886*
BAQV	*96161893*	*96161894*	*96161896*	*96161895*	*96161897*
BQQE	*96161911*	*96161912*	*96161914*	*96161913*	*98434945*
BQQV	*96161899*	*96161900*	*96161902*	*96161901*	*98434947*
GQQE	*96161888*	*96161889*	*96161890*	*96551584*	*96161891*
GQQV	*96161905*	*96161906*	*96161908*	*96161907*	*96161909*

Shaft seal, 25 bar

The kits include the shaft seal (pos. 105) and a mounting cone.

Pump type		Shaft diameter
TP 65-	250/4, 350/4, 370/4, 430/4, 440/4, 570/4, 630/4	1 7/8"
	950/2, 1000/2, 1320/2, 1380/2, 1500/2, 1670/2, 2040/2, 2360/2	2 1/2"
TP 80-	170/4, 210/4, 250/4, 270/4, 290/4, 350/4, 400/4,	1 5/8"
	300/4, 370/4, 390/4, 450/4, 530/4, 580/4,	1 7/8"
	730/2, 800/2, 900/2, 1020/2, 1040/2, 1160/2, 1210/2, 1410/2, 1570/2	2"
	1030/2, 1130/2, 1400/2, 1450/2, 1550/2, 1600/2, 1900/2, 2100/2, 2300/2	2 1/2"
TP 100-	170/4, 210/4, 220/4, 250/4, 260/4, 330/4, 360/4	1 5/8"
	270/4, 320/4, 380/4, 420/4, 450/4, 530/4, 590/4, 620/2, 700/2, 820/2, 960/2, 1000/2, 1100/2, 1250/2, 1350/2	2"
	1050/2, 1180/2, 1400/2, 1450/2, 1530/2, 1560/2, 1680/2, 1700/2, 2100/2, 2350/2	2 5/8"
TP 125-	150/4, 210/4, 240/4, 270/4, 310/4 (60 Hz), 320/4 (60 Hz), 370/4 (60 Hz)	1 7/8"
	580/2, 720/2, 750/2	2"
	280/4, 310/4 (50 Hz), 350/4, 370/4 (50 Hz), 430/4, 440/4, 500/4, 570/4, 620/4	2 1/2"
	480/4, 580/4, 640/4, 670/4, 830/4, 910/4	2 3/4"
	1060/2, 1160/2, 1310/2, 1500/2, 1670/2	2 5/8"
TP 150-	170/4, 220/4, 230/4, 270/4, 350/4, 380/4	2 1/2"
	240/4, 320/4, 330/4, 370/4, 450/4, 490/4,	
	430/4, 530/4, 650/4, 710/4, 800/4, 930/4	2 3/4"
TP 200-	190/4, 210/4, 220/4, 230/4, 250/4, 310/4	2 1/4"
	450/4, 510/4, 560/4, 620/4, 670/4, 760/4, 840/4, 930/4	2 3/4"
TP 250-	260/4, 280/4, 350/4, 370/4, 380/4, 420/4, 520/4, 560/4,	2 5/8"
	270/4, 320/4, 370/4, 430/4, 500/4, 550/4,	
	490/4, 540/4, 600/4, 660/4, 720/4, 800/4, 910/4, 1020/4	3"

Type/shaft diameter	1 5/8"	1 7/8"	2"	2 1/4"	2 1/2"	2 3/4"	2 5/8"	3"
DBUE	*96121645*	*96121646*	*96121647*	*96121644*	*96121648*	*96121649*	*96121650*	*96121652*

TP 100 - TP 200, 10 bar

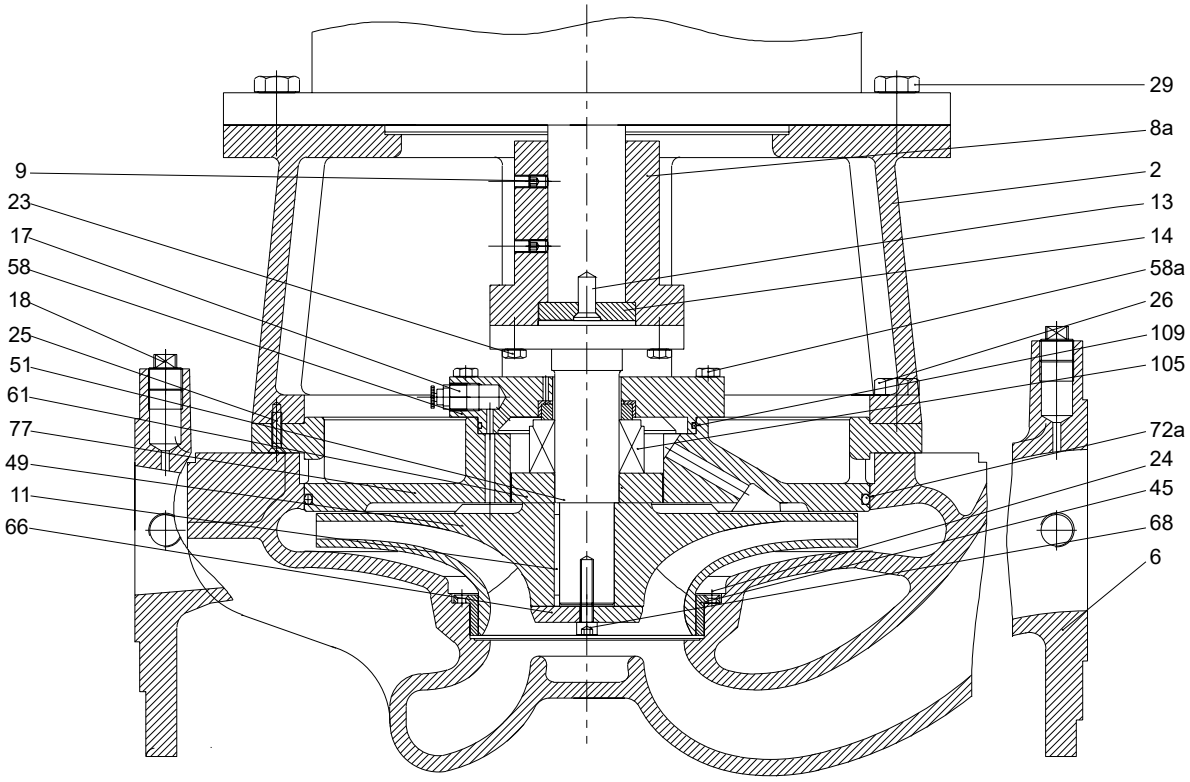

TP 65 - TP 250, 25 bar

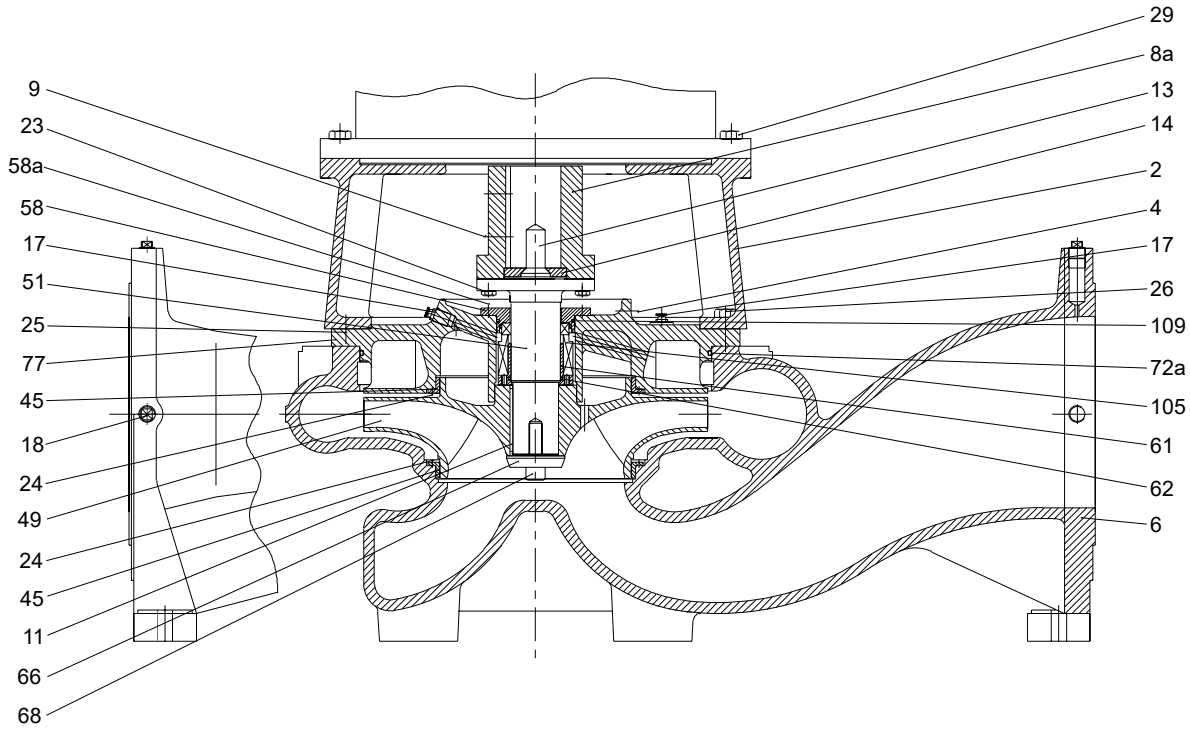

O-ring

The kits include O-rings (pos. 62, 72a, 109).

Pump type		Kit No
10 bar		
TP 100-	600/4	*96121691*
	650/2	*96121692*
TP 125-	540/2	*96121687*
	570/2, 730/2, 810/2	*96121689*
TP 150-	310/4, 370/4, 380/4, 420/4, 490/4, 550/4	*96121687*
TP 200-	260/4, 280/4, 300/4, 320/4, 350/4, 380/4, 390/4, 430/4, 520/4, 570/4	
TP 250-	280/4, 310/4, 390/4, 450/4, 530/4, 580/4	*96121688*
25 bar		-
TP 65-	250/4, 350/4, 370/4, 430/4, 440/4, 570/4, 630/4	*96121677*
	950/2, 1000/2, 1320/2, 1380/2, 1500/2, 1670/2, 2040/2, 2360/2	*96121681*
TP 80-	1020/2, 1040/2	*96121674*
	300/4, 370/4, 390/4, 450/4, 530/4, 580/4	*96121677*
	170/4, 210/4, 250/4, 270/4, 290/4, 350/4, 400/4	*96121679*
	1130/2, 1400/2, 1450/2, 1550/2, 1600/2, 1900/2, 2100/2, 2300/2	*96121681*
TP 100-	270/4, 320/4, 380/4, 420/4, 450/4, 530/4, 590/4	*96121673*
	620/2, 700/2, 820/2, 960/2, 1000/2, 1250/2, 1350/2	*96121674*
	170/4, 210/4, 220/4, 250/4, 260/4, 330/4, 360/4	*96121679*
	1050/2, 1180/2, 1400/2, 1450/2, 1530/2, 1560/2, 1680/2, 1700/2, 2100/2, 2350/2	*96121683*
TP 125-	580/2, 720/2, 750/2	*96121675*
	150/4, 210/4, 240/4, 270/4, 310/4 (60 Hz), 320/4 (60 Hz), 370/4 (60 Hz)	*96121678*
	280/4, 310/4 (50 Hz), 320/4 (50 Hz), 350/4, 370/4 (50 Hz), 430/4, 440/4, 500/4, 570/4, 620/4	*96121681*
	10060/2, 1160/2, 1310/2, 1500/2, 1670/2,	*96121683*
	480/4, 580/4, 640/4, 670/4, 830/4, 910/4	*96121686*
TP 150-	170/4, 220/4, 230/4, 270/4, 350/4, 380/4	*96121680*
	240/4, 270/4, 320/4, 330/4, 350/4, 370/4, 450/4, 490/4,	*96121681*
	430/4, 530/4, 650/4, 710/4, 800/4, 930/4	*96121686*
TP 200-	190/4, 210/4, 220/4, 230/4, 250/4, 310/4	*96121682*
	450/4, 510/4, 560/4, 620/4, 670/4, 760/4, 840/4, 930/4	*96121684*
	260/4, 280/4, 350/4, 370/4, 380/4, 420/4, 520/4, 560/4	*96121683*
TP 250-	490/4, 540/4, 600/4, 660/4, 720/4, 800/4, 910/4, 1020/4	*96121676*
	270/4, 320/4, 370/4, 430/4, 5004, 550/4	*96121685*

Wear parts

The kits include countersunk screws (pos. 24) and one neck ring (pos. 45).

Pumps with two neck rings require two kits, these pumps are highlighted with bold.

Pump type		Kit No
TP 65-	All models	*96121667*
TP 80-	170/4, 210/4, 250/4, 270/4, 290/4, 350/4, 400/4, 730/2, 800/2, 900/2, 1020/2, 1040/2, 1160/2, 1210/2, 1410/2, 1570/2	*96121666*
	300/4, 370/4, 390/4, 450/4, 530/4, 580/4, 1030/2, 1130/2, 1400/2, 1450/2, 1550/2, 1600/2, 1900/2, 2100/2, 2300/2	*96121667*
TP 100-	170/4, 210/4, 220/4, 250/4, 260/4, 330/4, 360/4, 600/4, 620/2, 650/2, 700/2, 820/2, 960/2, 1000/2, 1100/2, 1250/2, 1350/2	*96121661*
	270/4, 320/4, 380/4, 420/4, 450/4, 530/4, 590/4, 1050/2, 1180/2, 1400/2, 1450/2, 1530/2, 1560/2, 1680/2, 1700/2, 2100/2, 2350/2	*96121668*
TP 125-	150/4, 210/4, 240/4, 270/4, 280/4, 320/4, 350/4, 370/4, 430/4, 440/4, 500/4, 570/2, 570/4, 580/2, 620/4, 720/2, 730/2, 750/2, 810/2, 1160/2, 1310/2, 1500/2, 1670/2	*96121662*
	480/4, 580/4, 640/4, 670/4, 830/4, 910/4	*96121663*
	1060/2	*96121668*
TP 150-	240/4, 270/4, 310/4, 320/4, 330/4, 350/4, 370/4, 380/4, 420/4, 450/4, 490/4, 550/4, **710/4, 800/4, 930/4**	*96121663*
	430/4, 530/4, 650/4	*96121665*
	170/4, 220/4, 230/4, 380/4	*96121669*
TP 200-	260/4, 280/4, 300/4, 320/4, 350/4, 370/4, 380/4, 390/4, 430/4, 420/4, **450/4, 510/4,** 520/4, **560/4**, 570/4, **620/4, 670/4, 760/4, 840/4, 930/4**	*96121664*
	190/4, 210/4, 220/4, 230/4, 310/4	*96121670*
TP 250-	430/4	*96121664*
	270/4, 280/4, 310/4, 320/4, 370/4, 390/4, 450/4, **490/4,** 500/4, 530/4, **540/4,** 550/4, 580/4, **600/4, 660/4, 720/4, 800/4, 910/4, 1020/4**	*96121665*

TP 100 - TP 200, 10 bar

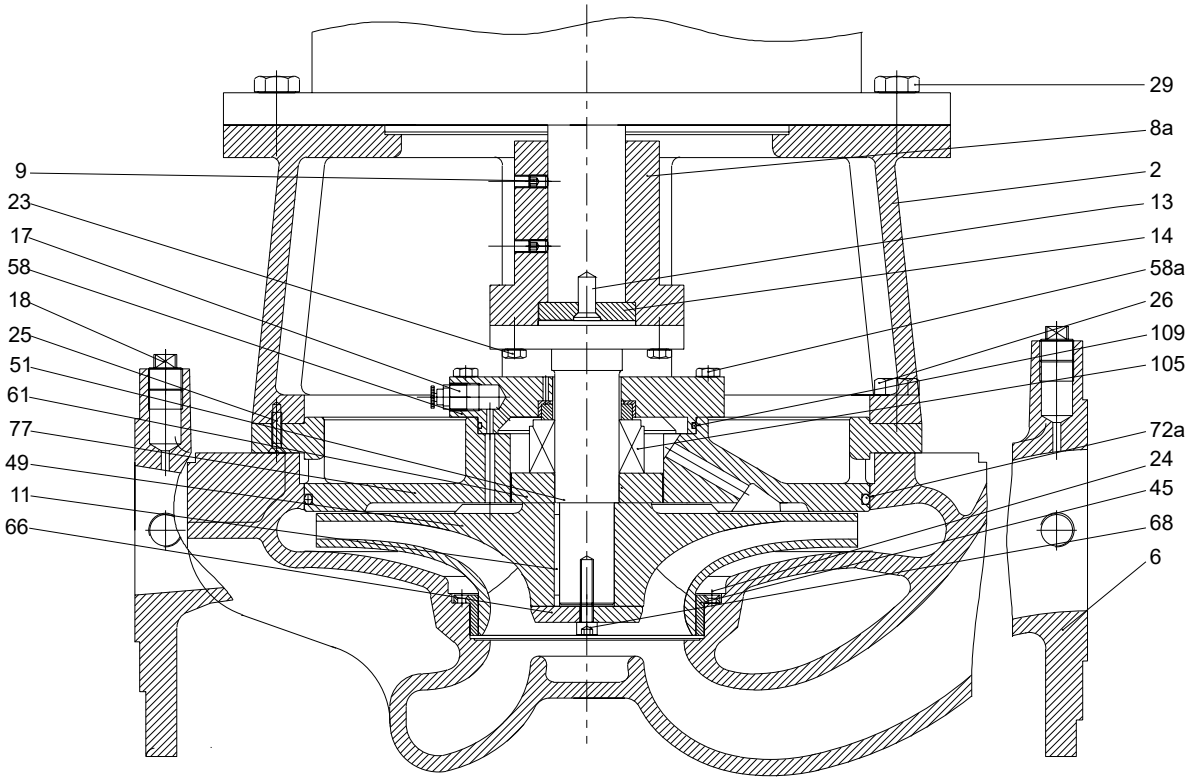

TM026998

TP 65 - TP 250, 25 bar

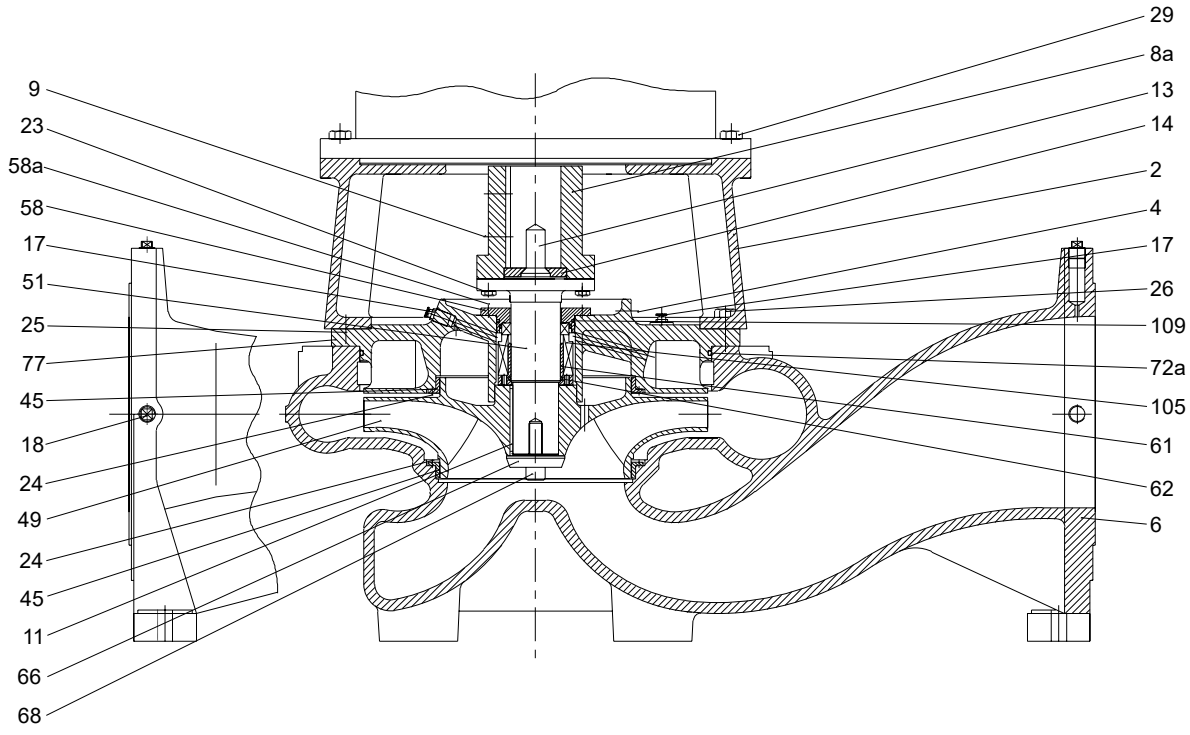

TM027000

TP Series 400

DN 300 - DN 400

Air vent screw

Pos.	Pump	TP 300	TP 400
	Description/kit No	*96121641*	*96121642*
17	Air vent screw	1	1
30	Union		2
31	Pipe bush		2
32	Pipe		1

Impeller screw

Pos.	Description/kit No	*96121643*
68	Screw M8 x 30	1
	Screw M12 x 40	1
	Screw M16 x 50	1

O-ring

Pos.	Description	Pump	TP 300	TP 400
		Kit No	*96121693*	*96121694*
62	O-ring		1	
72a	O-ring		1	2
109	O-ring		1	1

Wear parts

Pos.	Description	Pump	TP 300	TP 400
		Kit No	*96121671*	*96121672*
24(b)	Countersunk screw		6	6
45(b)	Neck ring		1	2
109	O-ring			2

Wear ring for impeller, TP 400

Pos.	Description/kit No	*96121695*
45	Wear ring for impeller	2
24	Set screw	16

Shaft seal

Description	Pump	TP 300	TP 400
	Kit No	*96121658*	*96121659*
Shaft seal		DBUE	DBUE

TP 300, 25 bar

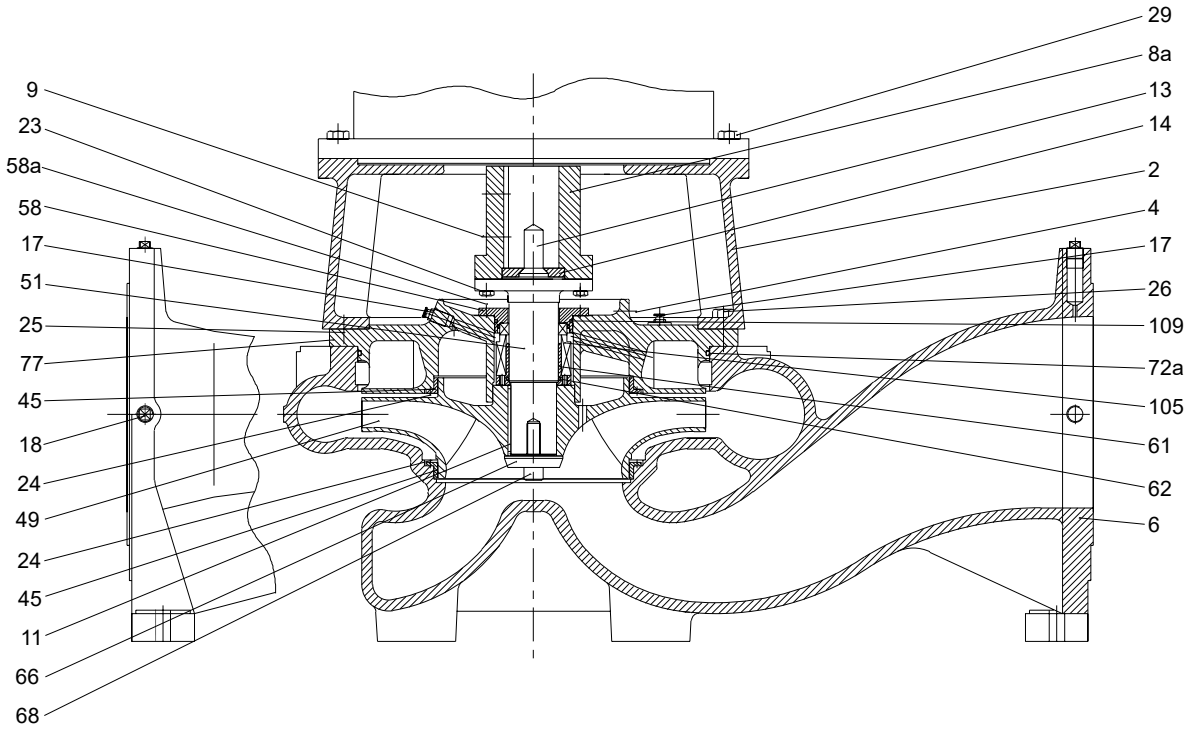

TM027000

TP 400, 25 bar

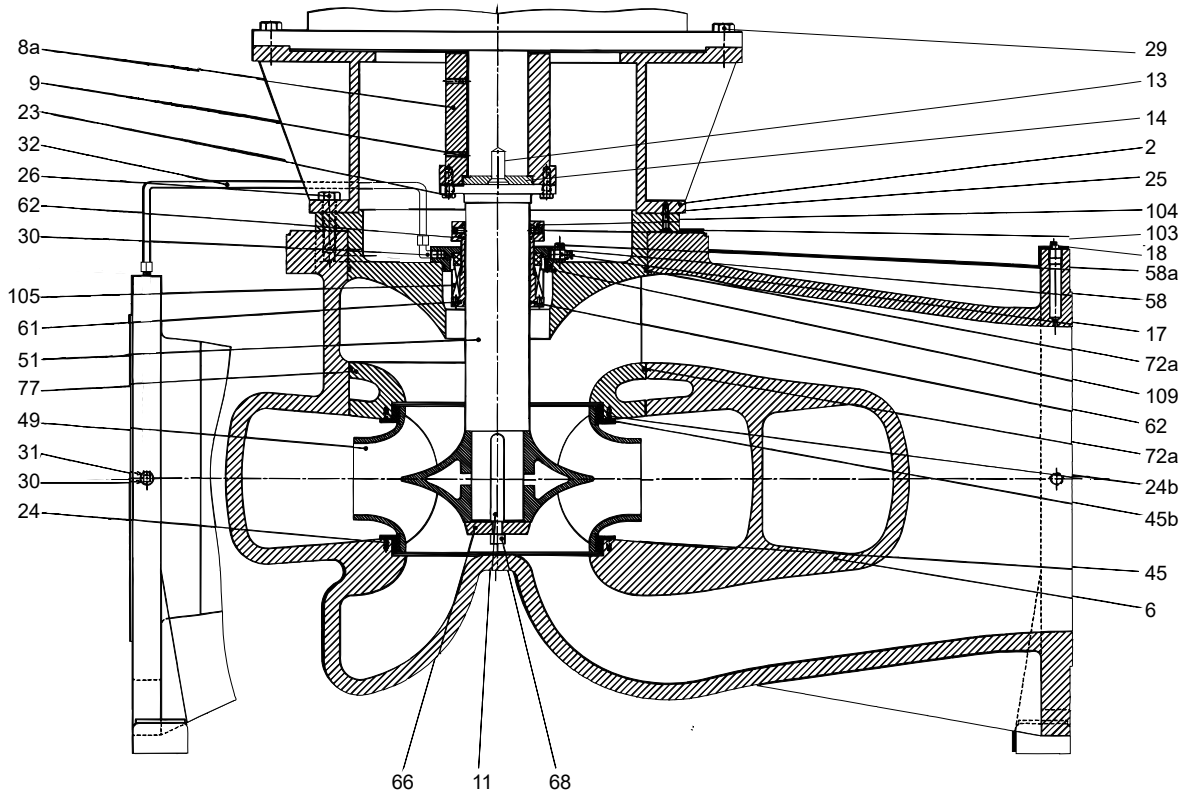

TM026997

90. TPE2, TPE2 D, TPE3, TPE3 D

50/60 Hz

Impeller

Pump type		TPE2, TPE2 D, TPE3, TPE3 D					
		32	40	50	65	80	100
Pos.	Kit No	*98660094*	*98660095*	*98660096*	*98660097*	*98660098*	*98660098*
11	Key	1	1	1	1	1	1
45	Neck ring	1	1	1	1	1	1
49	Impeller	1	1	1	1	1	1
66a	Lock washer	1	1	1	1	1	1
67	Locking nut	1	1	1	1	1	1

Pump housing

Pump type		TPE2							
		32	40	50	65	80		100	
Pos.	Type	PN 6, 10 , 16				PN 6	PN 10, 16	PN 6	PN 10, 16
	Kit No	*98660054*	*98660055*	*98660056*	*98660057*	*98660058*	*98660059*	*98660060*	*98660061*
6	Pump housing	1	1	1	1	1	1	1	1

Pump type		TPE2 D							
		32	40	50	65	80		100	
Pos.	Type	PN 6, 10 , 16				PN 6	PN 10, 16	PN 6	PN 10, 16
	Kit No	*98660070*	*98660071*	*98660072*	*98660073*	*98660074*	*98660075*	*98660076*	*98660077*
6	Pump housing	1	1	1	1	1	1	1	1

Pump type		TPE3							
		32	40	50	65	80		100	
Pos.	Type	PN 6, 10 , 16				PN 6	PN 10, 16	PN 6	PN 10, 16
	Kit No	*98660062*	*98660063*	*98660064*	*98660065*	*98660066*	*98660067*	*98660068*	*98660069*
6	Pump housing	1	1	1	1	1	1	1	1

Pump type		TPE3 D							
		32	40	50	65	80		100	
Pos.	Type	PN 6, 10 , 16				PN 6	PN 10, 16	PN 6	PN 10, 16
	Kit No	*98660078*	*98660079*	*98660080*	*98660081*	*98660082*	*98660083*	*98660084*	*98660085*
6	Pump housing	1	1	1	1	1	1	1	1

Shaft seal

Pump type		TPE2, TPE2 D, TPE3, TPE3 D					
		32, 40, 50, 65, 80, 100					
Pos.	Kit No	*98660102*	*98660103*	*98660104*	*98660105*	*98660106*	*98660107*
	Type	BUBE	BQQE	GQQE	BUBV	BQQV	GQQV
301a	O-ring	1	1	1	1	1	1
105	Shaft seal	1	1	1	1	1	1

Two-way flap

Pump type		TPE2 D, TPE3 D					
		32	40	50	65	80	100
Pos.	Kit No	*98660108*	*98660109*	*98660110*	*98660111*	*98660112*	*98660113*
215	Guide pin	1	1	1	1	1	1
215a	Plug	2	2	2	2	2	2
217	Valve flap	1	1	1	1	1	1

TPE2, TPE2 D, TPE3, TPE3 D

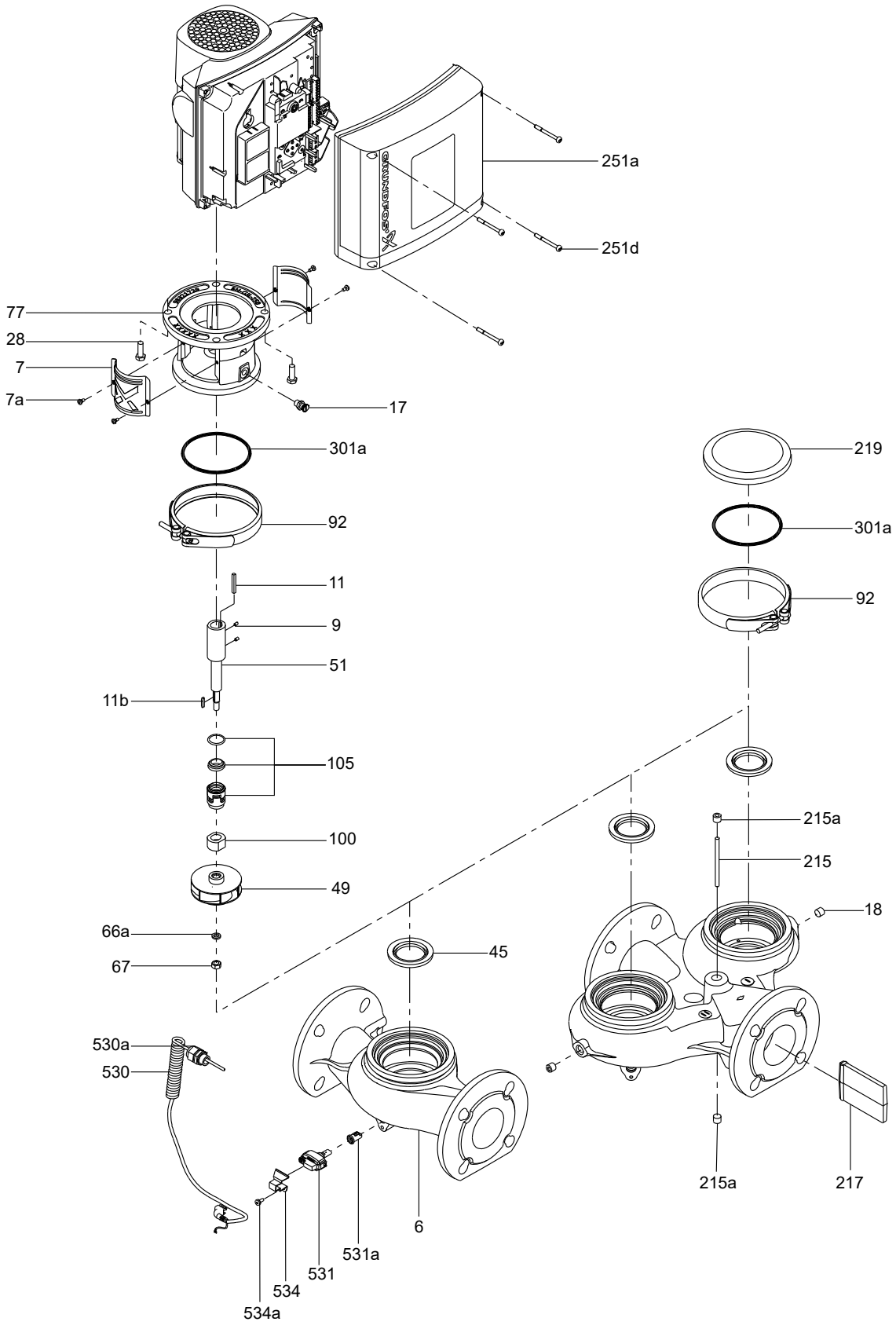

Air vent screw

Pump type		TPE2, TPE2 D, TPE3, TPE3 D
		32, 40, 50, 65, 80, 100
Pos.	Kit No	*98164277*
17	Air vent screw	1

Clamp

Pump type		TPE2, TPE2 D, TPE3, TPE3 D
		32, 40, 50, 65, 80, 100
Pos.	Kit No	*98660114*
92	Clamp	1

Motor stool

Pump type		TPE2, TPE2 D, TPE3, TPE3 D
		32, 40, 50, 65, 80, 100
Pos.	Kit No	*98660053*
77	Motor stool	1

O-ring

Pump type		TPE2, TPE2 D, TPE3, TPE3 D	
		32, 40, 50, 65, 80, 100	
Pos.	Kit No	*98660099*	*98811502*
	Type	EPDM	FKM
301a	O-ring	1	1

Sensor and cable

Pump type		TPE3, TPE3 D
		32, 40, 50, 65, 80, 100
Pos.	Kit No	*98802463*
	Type	DPS
530	Cable	1
531	Sensor	1
531a	Sealing cap	1
534	Bracket	1
534a	Screw	1

Choose the shaft according to the pump production date.

Shaft

Before week 39, 2016

Pump type		TPE2, TPE2 D, TPE3, TPE3 D	
		32, 40, 50, 65, 80, 100	
Pos.	Kit No	*98660100*	*98660101*
	Type	EN 1.4301	EN 1.4401
9	Set screw	3	3
11	Key	1	1
51	Shaft	1	1

From week 39, 2016

Pump type		TPE2, TPE2 D, TPE3, TPE3 D	
		32, 40, 50, 65, 80, 100	
Pos.	Kit No	*99131304*	*99131305*
	Type	EN 1.4301	EN 1.4401
9	Set screw	3	3
11	Key	1	1
51	Shaft	1	1

TPE2, TPE2 D, TPE3, TPE3 D

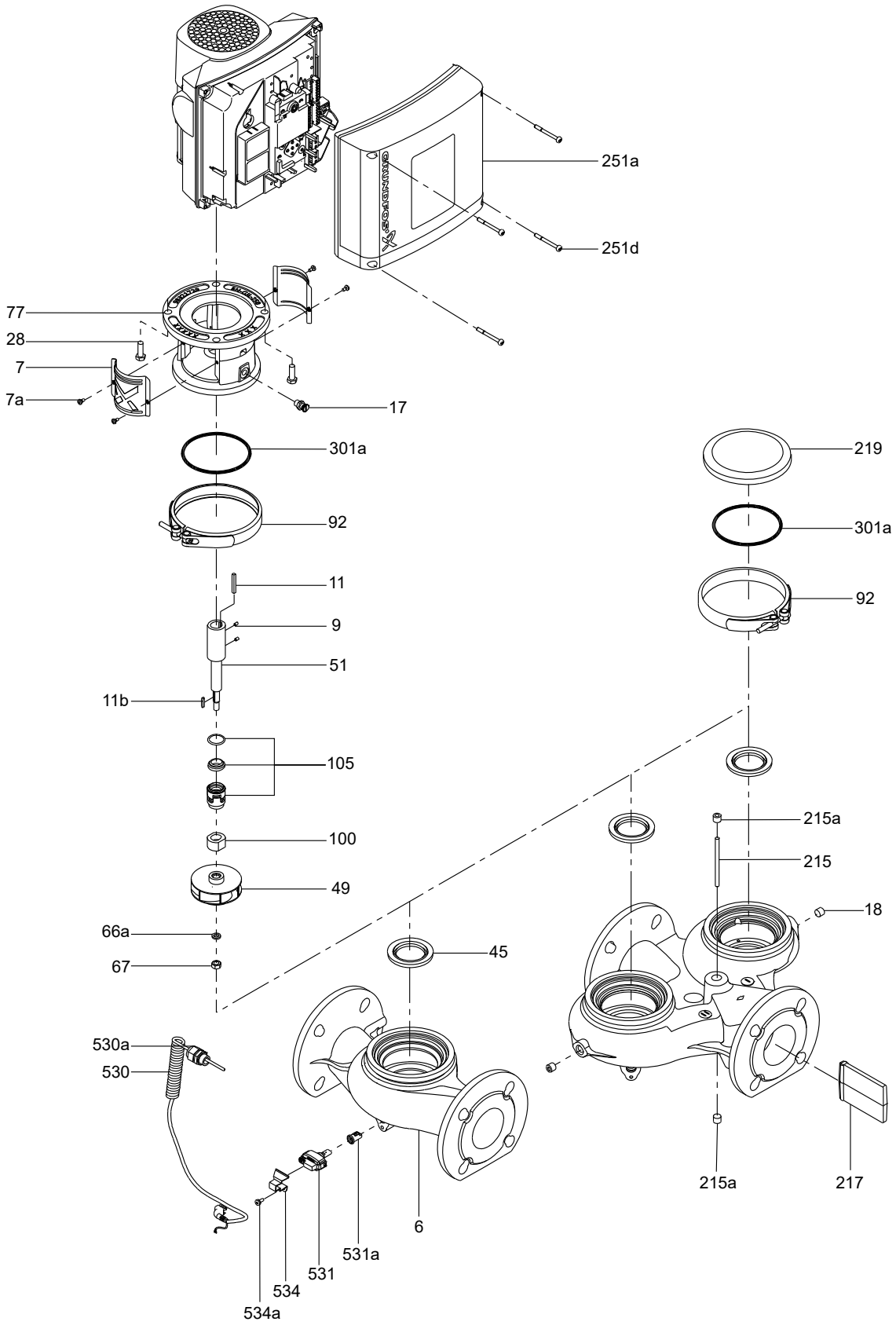

91. UMT, UMTD, UPT, UPTD

UMT, UPT

50/60 Hz, Models A, B, C, D

Coupling complete

Pos.						NEMA	NEMA
	Kit No	*339114*	*339119*	*339124*	*339128*	*485133*	*485134*
	Motor/pump shaft diameter [mm]	**14/16**	**19/16**	**24/16**	**28/16**	**15.9/16**	**28.6/16**
	Description						
8	Coupling half	2	2	2	2	2	2
9	Screw	4	4	4	4	4	4
10	Pin	1	1	1	1	1	1

Shaft seal

Pos.	**Pump shaft diameter [mm]**	**16**					**12**				
	UMT	**40/50/65/80/100**									
	UPT	**40-60/40-120/50/65/80/100**					**25/32/40-50/40-90**				
	Kit No	*495063*	*495078*	*985844*	*96436691*	*96436690*	*495067*	*96421210*	*96421211*	*96421212*	*96421213*
	Pump model	**B, C, D**					**A, B**	**B, C, D**			
	Description	**AUUE**	**BUBE**	**RUUE/V**	**BQQE**	**BQQV**	**CVBE/V**	**BUUE**	**BUUV**	**GUUE**	**GUUV**
48	Split cone nut	1	1	-	1	1	-	-	-	-	-
49b	Split cone	1	1	-	1	1	-	-	-	-	-
72a	O-ring	1	1	1	1	1	1	1	1	1	1
105a	Shaft seal	1	1	1	1	1	1	1	1	1	1

Wear parts

Pos.	**UMT**	**40/50/65/80/100**		
	UPT	**40-60/40-120/50/65/80/100**		
	Kit No	*985271*	*495064*	*495079*
	Pump model	**A**	**B, C, D**	**B, C, D**
	Description		**AUUE**	**BUBE**
9	Coupling screw	4	4	4
10	Coupling pin	1	1	1
48	Split cone nut	1	1	1
49b	Split cone	1	1	1
51	Shaft	1	1	1
71	Distributing cup	1	1	1
72a	O-ring	1	1	1
105a	Shaft seal	1	1	1

Pos.	**UPT**	**25-50**	**25-90**	**32-30, 40-50**	**32-90, 40-90**	**25-50**	**25-90**
	Kit No	*96552581*	*96552582*	*96552583*	*96552584*	*96552567*	*96552568*
	Pump model	**A**	**A**	**A**	**A**	**B**	**B**
	Description	**CVBE**	**CVBE**	**CVBE**	**CVBE**	**CVBE**	**CVBE**
9	Coupling screw	4	4	4	4	4	4
10	Coupling pin	1	1	1	1	1	1
49 51	Shaft with impeller	1	1	1	1	1	1
72a	O-ring	1	1	1	1	1	1
105a	Shaft seal	1	1	1	1	1	1

UMT, UPT

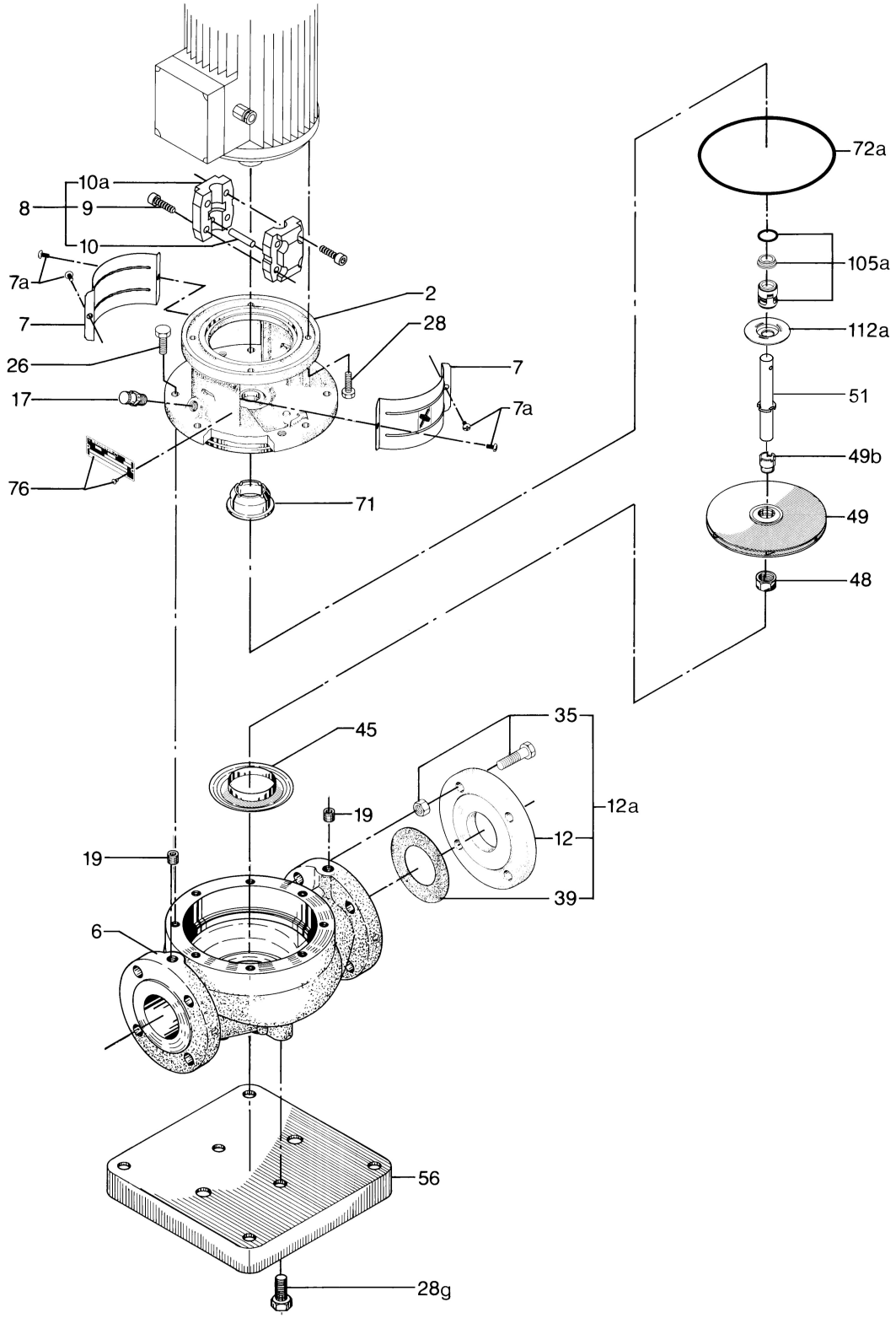

TM005354

UMTD, UPTD

Coupling complete

Pos.						NEMA	NEMA
	Kit No	*339114*	*339119*	*339124*	*339128*	*485133*	*485134*
	Motor/pump shaft diameter [mm]	**14/16**	**19/16**	**24/16**	**28/16**	**15.9/16**	**28.6/16**
	Description						
8	Coupling half	2	2	2	2	2	2
9	Screw	4	4	4	4	4	4
10	Pin	1	1	1	1	1	1

Shaft seal

Pos.	**Pump shaft diameter [mm]**	**16**					**12**				
	UMT	**40/50/65/80/100**									
	UPT	**40-60/40-120/50/65/80/100**					**25/32/40-50/40-90**				
	Kit No	*495063*	*495078*	*985844*	*96436691*	*96436690*	*495067*	*96421210*	*96421211*	*96421212*	*96421213*
	Pump model	**B, C, D**					**A, B**	**B, C, D**			
	Description	**AUUE**	**BUBE**	**RUUE/V**	**BQQE**	**BQQV**	**CVBE/V**	**BUUE**	**BUUV**	**GUUE**	**GUUV**
48	Split cone nut	1	1	-	1	1	-	-	-	-	-
49b	Split cone	1	1	-	1	1	-	-	-	-	-
72a	O-ring	1	1	1	1	1	1	1	1	1	1
105a	Shaft seal	1	1	1	1	1	1	1	1	1	1

Wear parts

Pos.	**UMTD**	**40/50/65/80/100**			**25/32/40-50/40-90**	
	UPTD	**40-60/40-120/50/65/80/100**				
	Kit No	*985271*	*495064*	*495079*	*495068*	*495083*
	Pump model	**A**	**B, C, D**	**B, C, D**	**A**	**B**
	Description		**AUUE**	**BUBE**	**CVBE**	**CVBE**
9	Coupling screw	4	4	4	4	4
10	Coupling pin	1	1	1	1	1
48	Split cone nut	1	1	1	-	-
49b	Split cone	1	1	1	1	1
51	Shaft	1	1	1	1	1
71	Distributing cup	1	1	1	-	-
72a	O-ring	1	1	1	1	1
105a	Shaft seal	1	1	1	1	1

Valve for twin-head pumps

Pos.	**UMTD, UPTD**	**40**
	Kit No	*545196*
	Description	
215	Pin	1
217	Valve flap	1
220	Non-return valve casing	1

UMTD, UPTD

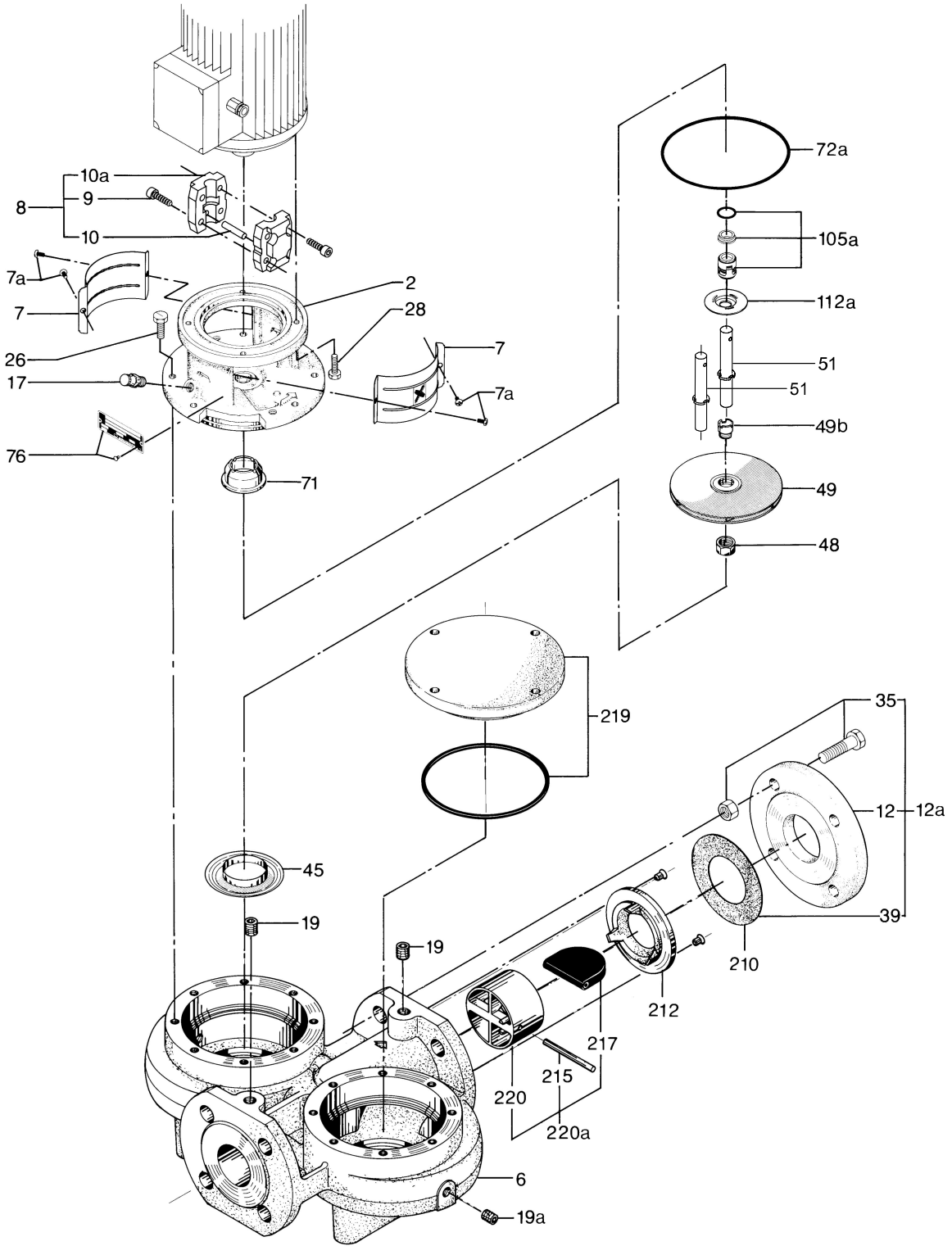
72a
10a
9
8
10
105a
7a
2
112a
7
28
51
26
7
51
17
7a
49b
76
71
49
48
219
35
12
12a
45
39
19
19
210
212
217
215
220
220a
6
19a
TM005355

92. Unilift

Unilift AP12, 35, 50

50/60 Hz

Shaft seal

Pos.	Pump types	Produced before 0321 (yyww)	
	Material	BQQP	BQQV
	Kit No	*96427804*	*96426650*
	Description		
37a	O-ring	1	1
66	Washer	1	1
67	Lock nut	1	1
67a	Protective cap	1	1
105	Shaft seal	1	1
188a	Screw	6	6
193	Screw	2	2
194	O-ring	2	2
198	O-ring	2	2
199	O-ring	1	1
-	Oil for motor	1	1

Unilift AP12, 35, 50

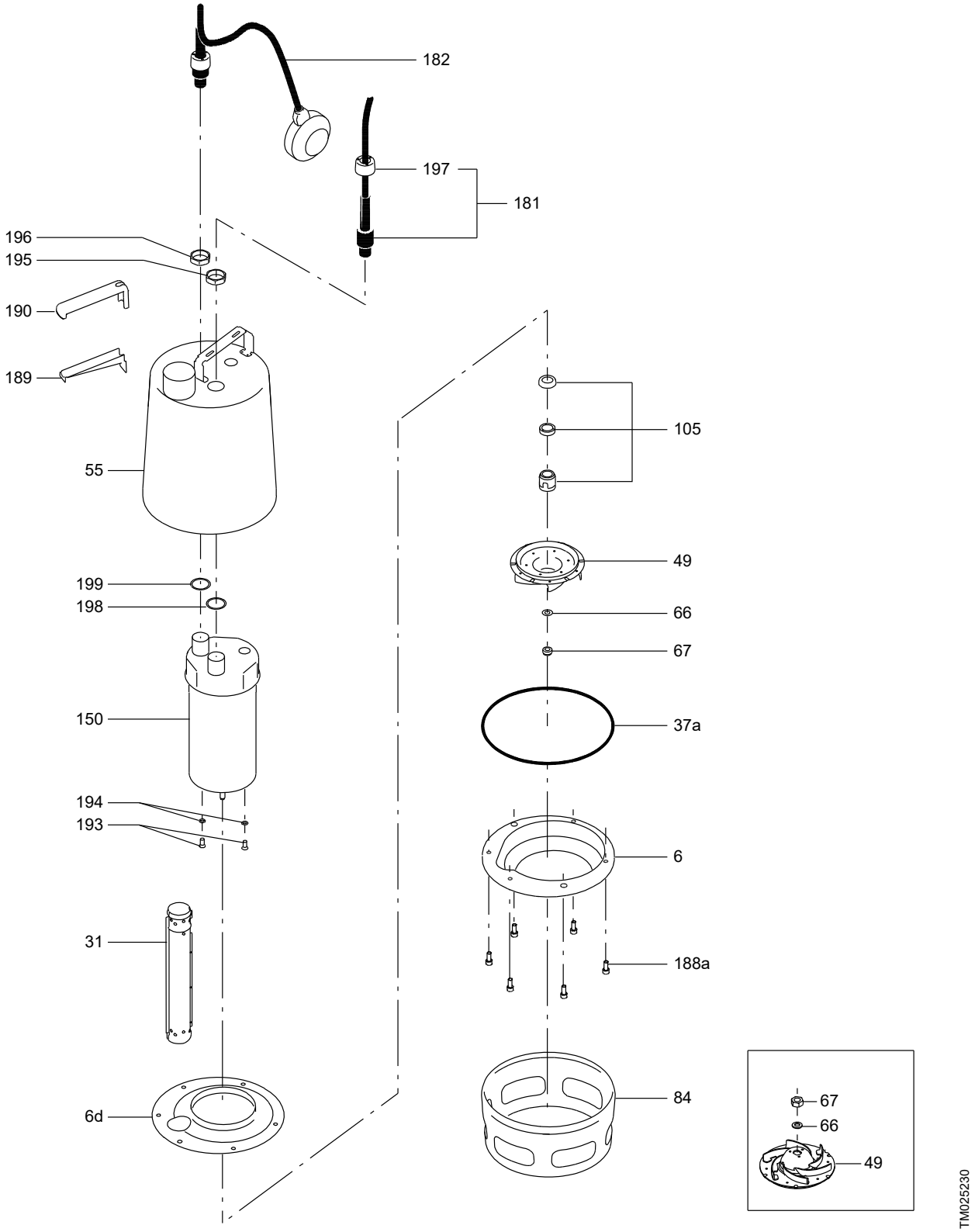

Unilift AP35B, AP50B

Shaft seal

Pos.	Pump type	Produced before 0321 (yyww)	
	Kit No	96429307	96429308
	Description	BQQP	BQQV
37	O-ring	1	1
37a	O-ring	1	1
66	Lock washer	1	1
67	Nut M10	1	1
105a	Shaft seal	1	1
193	Screw	2	2
194	O-ring	2	2
-	Oil for motor	1	1

Cable (new type)

Plug type	Schuko	Schuko	Schuko	None	None
Kit No	16701	16702	16734	16730	16731
Switch	Float switch	-	Float switch	-	-
Phase	1	1	1	3	3
Cable lenght [m]	10	10	5	5	10
Nut	2	2	2	2	2
Washer	2	2	2	2	2
Cable complete	1	1	1	1	1

Cable (old type)

Kit No	96429309	96429310
Description	Automatic	Manual
Motor plug housing	1	1
Intermediate plug	1	1
AMP terminals for power supply	1 set	1 set
AMP terminals for earth conductors	1 set	1 set
Oetiker rings	1 set	1 set
Cable entry with 1 hole	-	1
Cable entry with 2 holes	1	-
Rubber grommet for three-phase	-	1

Cable

Pos.	Kit No	96487149
	Description	DN 40
182	Cable	1

Upper guide rail holder

Pos.	Kit No	96829356
-	Upper guide rail 3/4"	1

Guide shoe

Pos.	Outlet	Rp 2	NPT 2
	Description	NBR	NBR
	Kit No	97771479	97771485
-	Rubber seal for guide shoe	1	1
-	Guide shoe	1	1

SmartSeal

Pos.	Kit No	Rp 2/NPT 2
	Description	NBR
	Kit No	97771488
-	SmartSeal for guide shoe	1

Unilift AP35B, AP50B

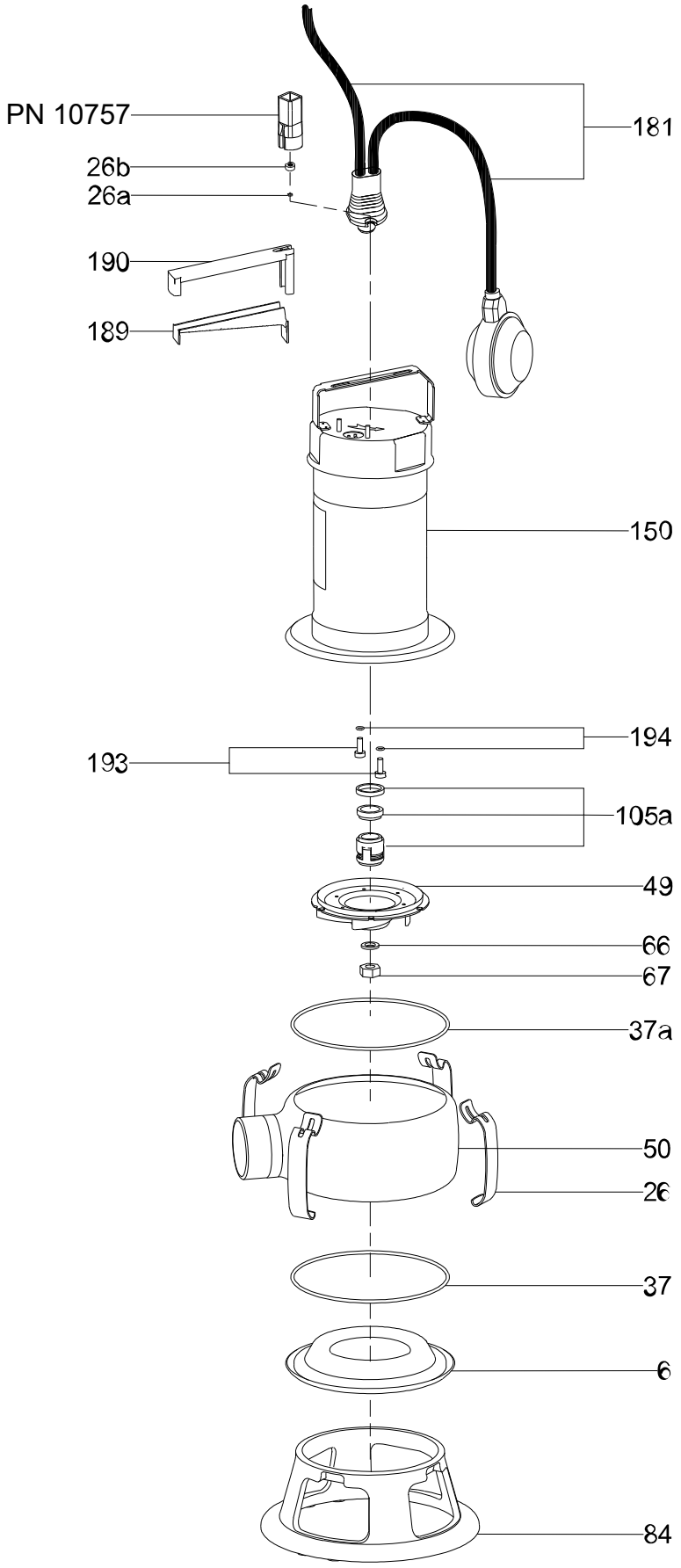

Unilift CC 5, 7, 9

50/60 Hz

Bottom part

Pos.	Description	CC 5, 7, 9
	Kit No	*97530921*
50	Pump housing, inlet	1
37a	O-ring	1

Cable

Pos.	Description	50 Hz						60 Hz	
		CC 5			CC 7, CC 9			115 V	230 V
								CC 5, 7, 9	CC 5, 7, 9
	Kit No	*96578971*	*97825411*	*97825415*	*96578972*	*97825435*	*97825438*	*97513318*	*97513331*
	Plug type	Schuko	Australia	None	Schuko	Australia	None	US	US
181	Cable, 10 m	1	1	1	1	1	1	-	-
	Cable, 32 ft	-	-	-	-	-	-	1	1
250	Cable entry	1	1	1	1	1	1	1	1
250a	Cable relief	1	1	1	1	1	1	1	1
48a	O-ring	1	1	1	1	1	1	1	1
48b	Cable crimp	3	3	3	3	3	3	3	3

Discharge connection

Pos.	Pump type	Unilift CC 5, 7, 9	Unilift CC 5, 7, 9
	Kit No	*97825319*	*97825327*
	Thread type	G	NPT
149b	Discharge connection	1	1
149a	O-ring	1	-
130a	Discharge elbow GAS 1 1/4 - GAS 1 1/4	1	1

Float switch

Pos.	Pump type	Unilift CC 5, 7, 9	Unilift CC 5, 7, 9
	Frequency	50 Hz	60 Hz
	Kit No	*96578970*	*97513612*
182	Float switch	1	1
250	Cable entry	1	1
250a	Cable relief	1	1
48a	O-ring	1	1
48b	Cable crimp	4	4

Impeller

Pos.	Description	50 Hz			60 Hz		
		CC 5	CC 7	CC 9	CC 5	CC 7	CC 9
	Kit No	*96578967*	*96578968*	*96578969*	*97512794*	*97512822*	*97512824*
48a	O-ring	1	1	1	1	1	1
49	Impeller	1	1	1	1	1	1
66	Washer	1	1	1	1	1	1
67	Nut	1	1	1	1	1	1
159	V-ring	-	1	1	-	1	1

Motor

Pos.	Description	50/60 Hz			60 Hz		
		230			115 V		
		CC 5	CC 7	CC 9	CC 5	CC 7	CC 9
	Kit No	***96578973***	***96578974***	***96578975***	***97513772***	***97513776***	***97513778***
48	Motor	1	1	1	1	1	1
48a	O-ring	1	1	1	1	1	1
48b	Cable crimp	3	3	3	3	3	3

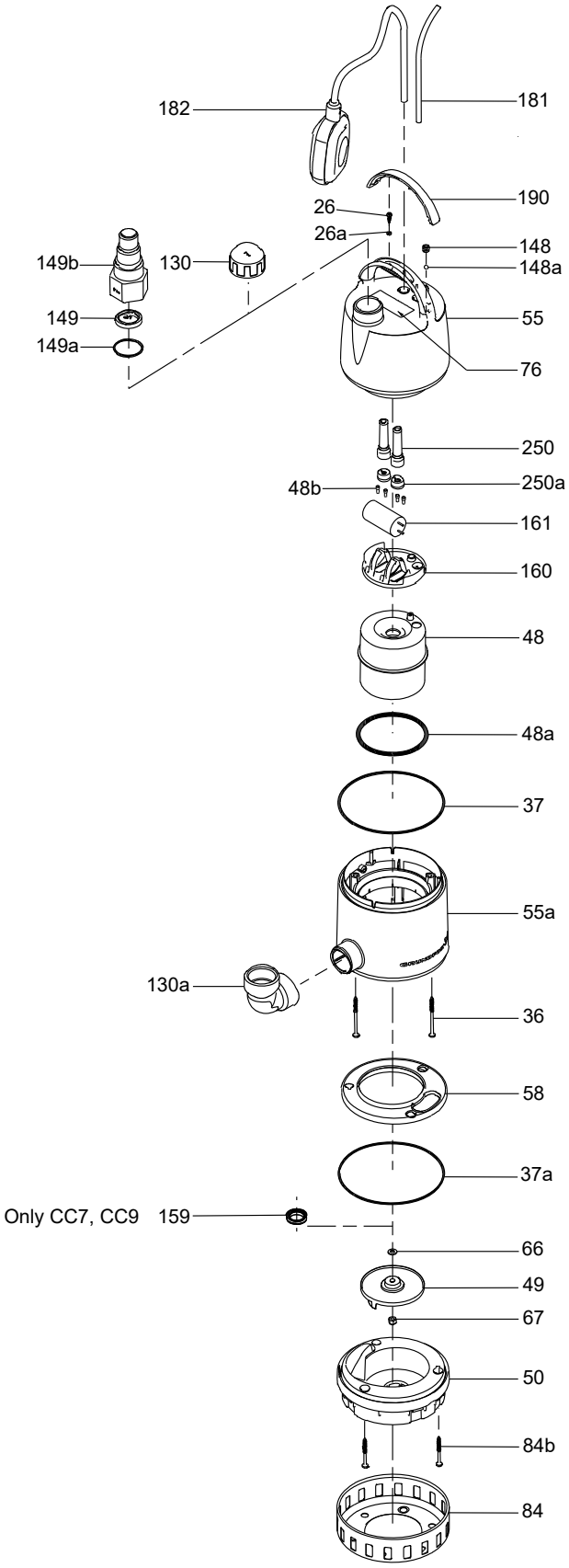
182
181
190
26
26a
148
148a
149b
130
149
149a
55
76
250
48b
250a
161
160
48
48a
37
55a
130a
36
58
37a
Only CC7, CC9
159
66
49
67
50
84b
84
TM031101

Flap valve

Pos.	Pumpe type	Unilift CC 5, 7, 9
	Kit No	***97825322***
149	Rubber flap valve	1
149a	O-ring	1

O-ring

Pos.	Pumpe type	Unilift CC 5, 7, 9
	Kit No	***98561387***
48a	O-ring	1
37a	O-ring	2
149a	O-ring	1

Spare part and bulk parts

Capacitor

Pos.	Description	50/60 Hz	50 Hz	60 Hz		
		230 V	230 V	115 V		230 V
		CC 5	CC 7, CC 9	CC 5, 7	CC 9	CC 7, 9
	Kit No	***96578976***	***96578977***	***97825310***	***97825316***	***97824695***
161	Capacitor	10	10	10	10	10
48b	Cable crimp	20	20	20	20	20

Discharge connection

Pos.	Pumpe type	Unilift CC 5, 7, 9	Unilift CC 5, 7, 9
	Kit No	***96578979***	***97825317***
	Thread type	**G**	**NPT**
149b	Discharge connection	10	10
149a	O-ring	1	-

Flap valve

Pos.	Pumpe type	Unilift CC 5, 7, 9
	Kit No	***96578978***
149	Rubber flap valve	10
149a	O-ring	-

Handle cover

Pos.	Pumpe type	Unilift CC 5, 7, 9
	Kit No	***96622011***
190	Handle cover	10

Strainer

Pos.	Pumpe type	Unilift CC 5, 7, 9
	Kit No	***96578990***
84	Strainer	1

Unilift CC 5, 7, 9

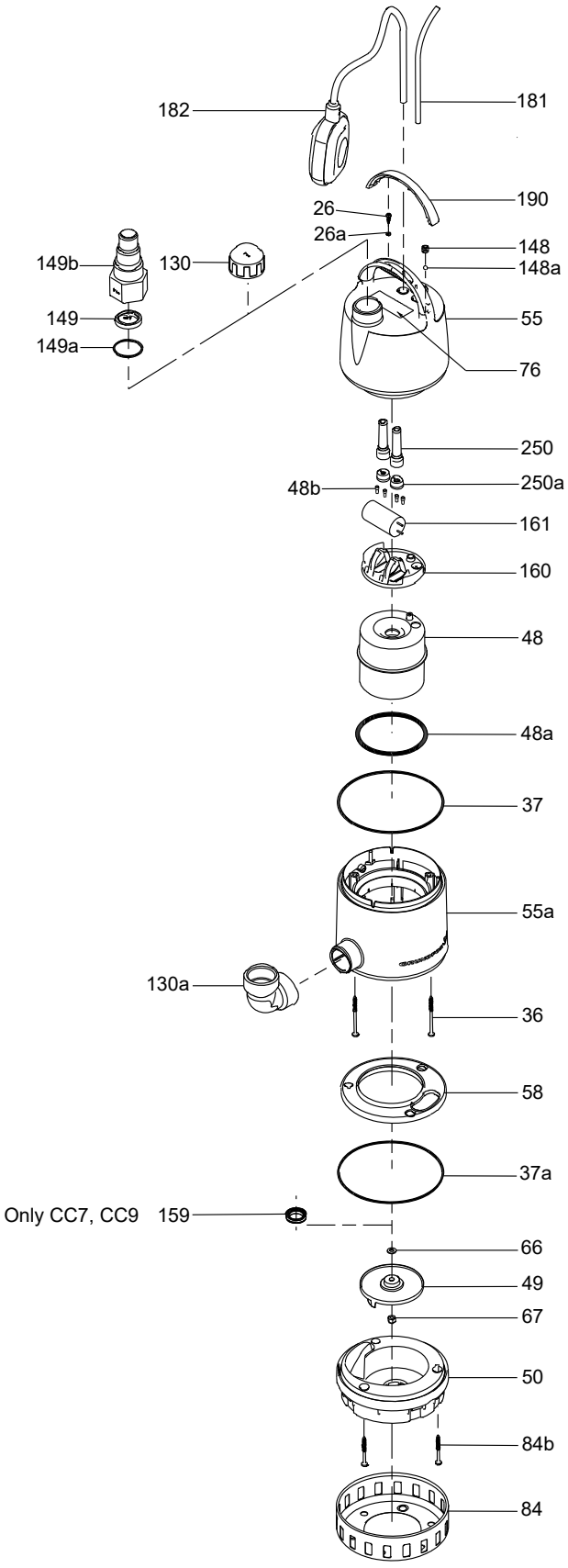

Unilift KP

50/60 Hz, Models A, B, C

Bearing

Pos.	Pump type	All
	Description/kit No	***96551553***
188	Bearing complete	1

Cable

Pos.	Plug type	Australia		CEE		CH		
	Kit No	***16715***	***16716***	***16735***	***16736***	***16712***	***16710***	***16711***
	Phase	**1**	**1**	**3**	**3**	**1**	**1**	**1**
	Cable length [m]	**5**	**5**	**5**	**10**	**10**	**3**	**10**
26	Nut	2	2	2	2	2	2	2
26a	Washer	2	2	2	2	2	2	2
181	Cable	1		1	1	1		
	Cable with float switch		1				1	1

Pos.	Plug type	DK		
	Kit No	***16707***	***16705***	***16706***
	Phase	**1**	**1**	**1**
	Cable length [m]	**10**	**3**	**10**
26	Nut	2	2	2
26a	Washer	2	2	2
181	Cable	1	-	-
	Cable with float switch		1	1

Pos.	Plug type	Schuko					US		No plug	
	Kit No	***16702***	***16703***	***16700***	***16701***	***16704***	***16728***	***16729***	***16725***	***16737***
	Phase	**1**	**1**	**1**	**1**	**1**	**1, 115 V**			
	Cable length	**10 m**	**3 m**	**3 m**	**10 m**	**10 m**	**10 ft**	**25 ft**	**5 m**	**5 m**
26	Nut	2	2	2	2	2	2	2	2	2
26a	Washer	2	2	2	2	2	2	2	2	2
181	Cable	1	-	-	-	-	1	1	1	-
	Cable with float switch	-	-	1	1	-	-	-	-	-
	Cable with level switch	-	1	-	-	1	-	-	-	1

Impeller, 50 Hz

Pos.	Model:	A and B	A and B	C	
				1 x 100-110 V 3 x 200 V 3 x 380-400 V	**1 x 220-240 V as from 0108 (yyww)**
				1 x 220-240 V until 0108 (yyww)	
	Pump type	**150**	**250**	**350**	**350**
	Kit No	***015778***	***015779***	***015785***	***015787***
	Description				
37	Sealing part	1	1	1	1
49	Impeller	1	1	1	1
67	Lock nut	1	1	1	1

Impeller, 60 Hz

Pos.	Model	A and B		C
	Pump type	**150**	**250**	**350**
	Kit No	***015783***	***015784***	***015786***
	Description			
37	Sealing part	1	1	1
49	Impeller	1	1	1
67	Lock nut	1	1	1

Strainer

Pos.	Pump type	150, 250	350
	Description/kit No	***96548064***	***96548066***
84	Strainer	1	1

Unilift KP

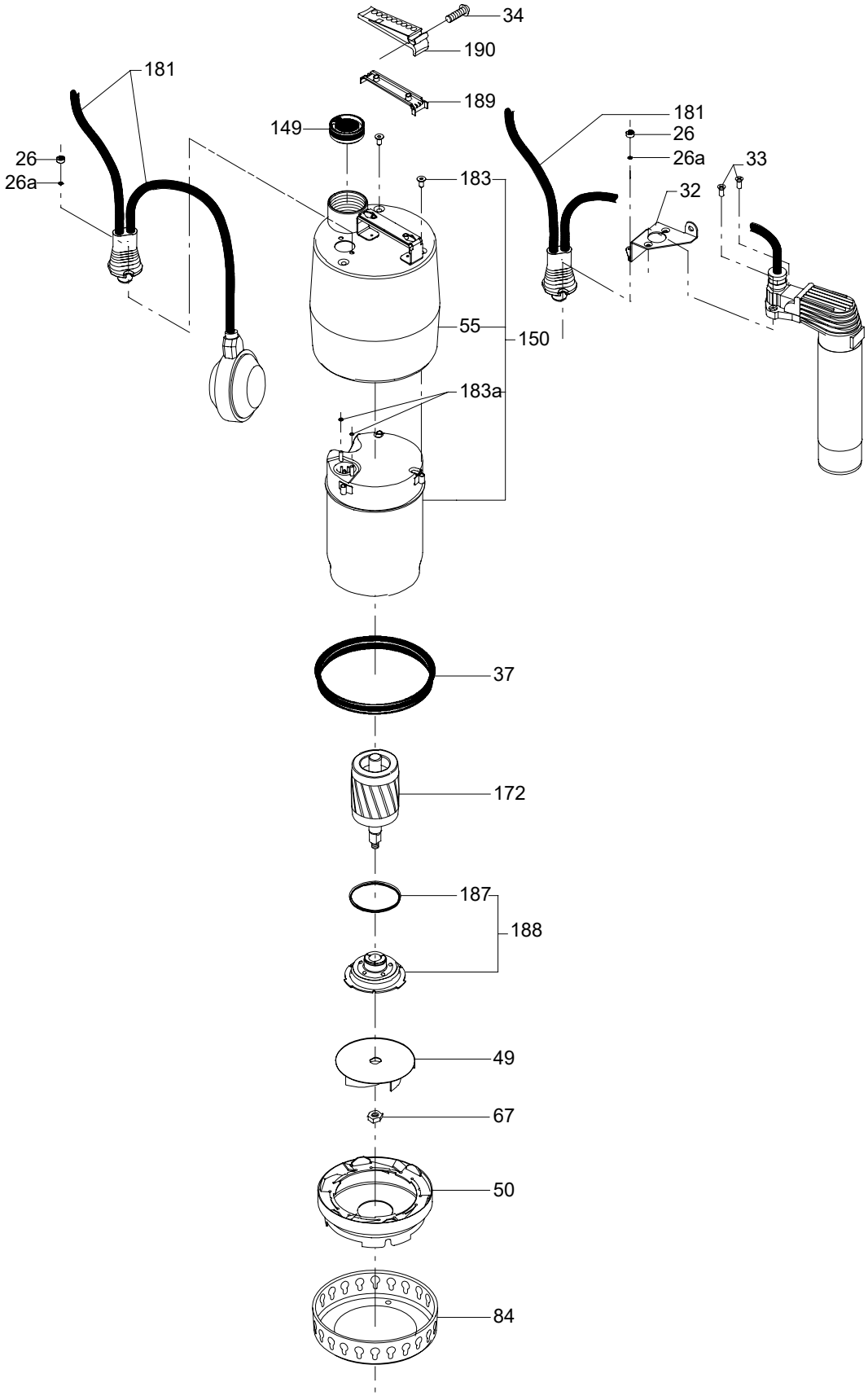
34
190
189
181
149
26
26a
183
181
26
26a
33
32
55
150
183a
37
172
187
188
49
67
50
84
TM001639

Guide shoe

Pos.	Outlet	Rp 2	NPT 2
	Rubber type	NBR	NBR
	Kit No	*97771479*	*97771485*
	Description		
-	Rubber seal for guide shoe	1	1
-	Guide shoe	1	1

Rubber valve

Pos.	Pump type	All
	Description/kit No	*15220*
149	Rubber valve	1

Shaft with rotor

Pos.	Pump type	150	250		350
		50 Hz 220-240 V	50/60 Hz 220-240 V	50 Hz 3 x 380-415 V	50/60 Hz 220-240 V 3 x 380-415 V
	Description/kit No	*96545200*	*96545201*	*96645534*	*96645536*
172	Shaft with rotor	1	1	1	1

Pos.	Plug type	None							
	Kit No	*96590416*	*16726*	*16739*	*96590417*	*16738*	*16724*	*96590414*	*96590415*
	Switch	-	-	Level switch	Level switch	Level switch	Float switch	Float switch	Float switch
	Phase	1	1	1	1	1	1	1	1
	Cable length [m]	5	10	3	5	10	3	5	10
26	Nut	2	2	2	2	2	2	2	2
26a	Washer	2	2	2	2	2	2	2	2
32	Holder for level switch	-	-	1	1	1	-	-	-
33	Screw	-	-	2	2	2	-	-	-
34	Screw	-	-	1	1	1	-	1	-
181	Cable complete	1	1	1	1	1	1	1	1

Pos.	Plug type	None		
	Kit No	*16732*	*16730*	*16731*
	Switch			
	Phase	3, 200 V	3	3
	Cable length [m]	5	5	10
26	Nut	2	2	2
26a	Washer	2	2	2
181	Cable complete	1	1	1

Upper guide rail holder

Pos.	Kit No	*96829356*
	Description	DN 40
-	Upper guide rail holder 3/4" (material 1.4301)	1

Unilift KP

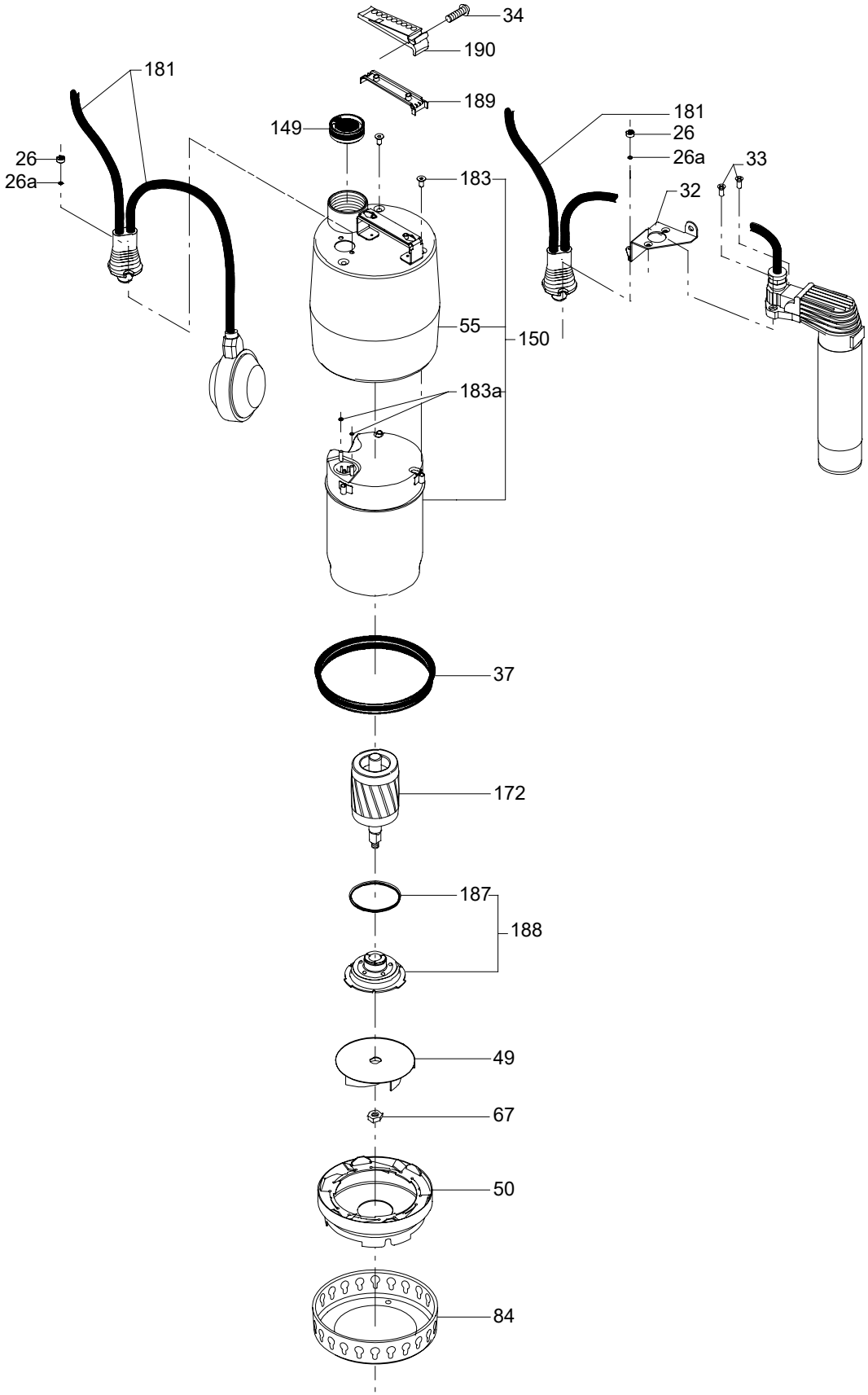
34
190
189
181
149
26
26a
183
181
26
26a
33
32
55
150
183a
37
172
187
188
49
67
50
84
TM001639

93. UPE, UPED

UPE small

50 Hz

Module

Description		Analog module MC xx
Pos.	**Pump type**	**Kit No**
90b	UPE 15-40	*605663*
	UPE 25-40	
	UPE 25-40 A	
	UPE 25-40 B	
	UPE 25-60	
	UPE 25-60 A	
	UPE 25-60 B	
	UPE 32-40	
	UPE 32-60	

Description		Bus module MB xx
Pos.	**Pump type**	**Kit No**
90a	UPE 15-40	*605518*
	UPE 25-40	
	UPE 25-40 A	
	UPE 25-40 B	
	UPE 25-60	
	UPE 25-60 A	
	UPE 25-60 B	
	UPE 32-40	
	UPE 32-60	

Pump head

Pos.	Pump type	Kit No
150	UPE 15-40	*96870790*
	UPE 25-40	
	UPE 25-40 A	*96870790*
	UPE 25-40 B	
	UPE 25-60	*96870799*
	UPE 25-60 A	*96870799*
	UPE 25-60 B	*96870799*
	UPE 32-40	*96870790*
	UPE 32-60	*96870799*

UPE small

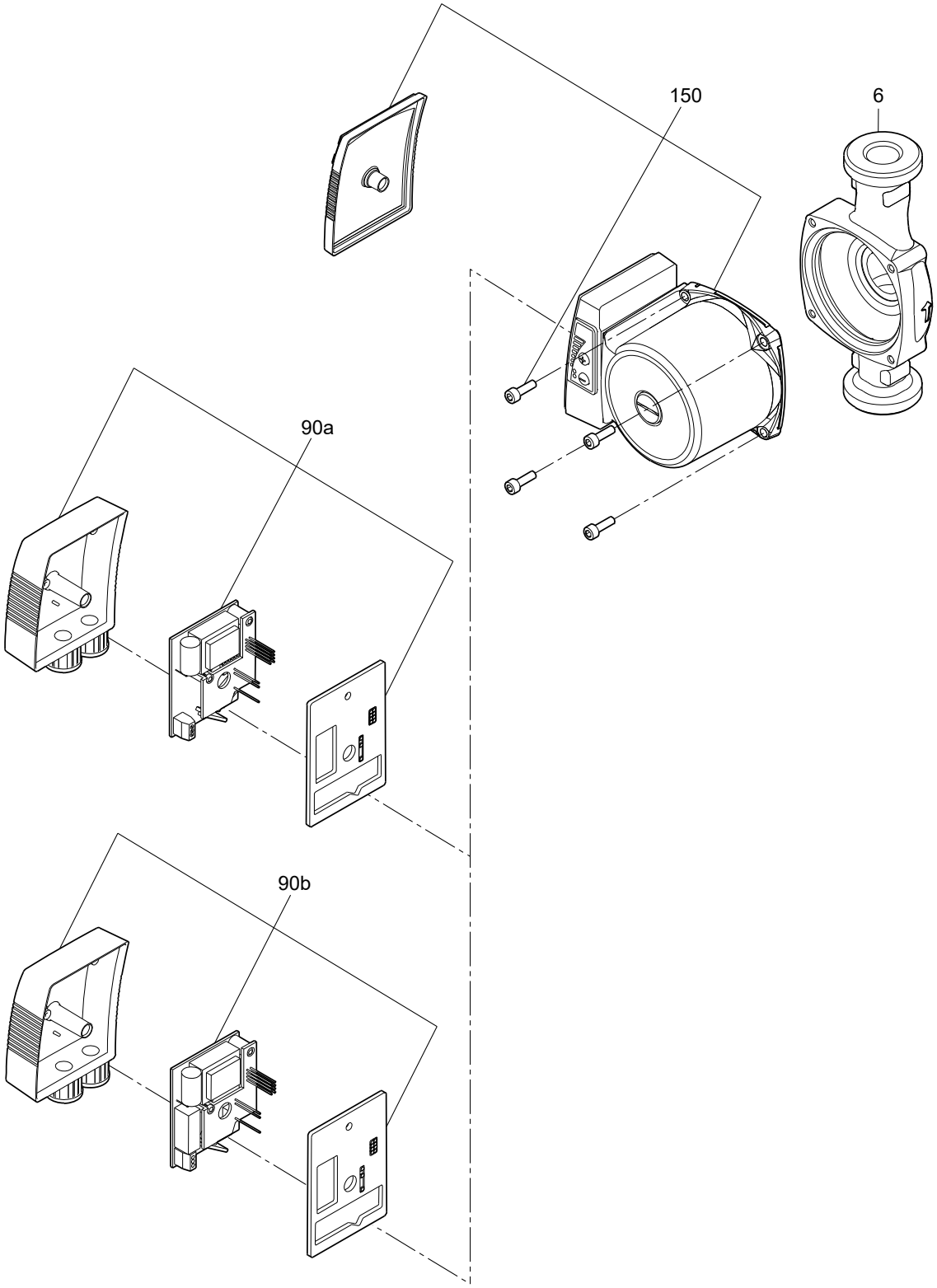

Models A, B, C

Model C

1 x 230-240 V

3 x 400-415 V

Pump type	Pump number	Pump head	Differential pressure sensor	Adapter	Gasket set [1]	Valve flap
			502	503		215, 217
UPE 80-120 F	*96402442*	*96406057*	*69005016*	-	*96406940*	-
UPE 80-120 F	*96402443*	*96406057*	*69005016*	-	*96406940*	-
UPE 80-120 FB	*96405829*	*96406057*	*69005016*	-	*96406940*	-
UPE 80-120 FB	*96402446*	*96406057*	*69005016*	-	*96406940*	-
UPE 100-60 F	*96402616*	*96406058*	*69005016*	-	*96406940*	-
UPE 100-60 F	*96402618*	*96406058*	*69005016*	-	*96406940*	-
UPE 100-60 FB	*96405830*	*96406058*	*69005016*	-	*96406940*	-
UPE 100-60 FB	*96405832*	*96406058*	*69005016*	-	*96406940*	-
UPED 80-120 F	*96403133*	*96406057*	*69005016*	-	*96406940*	*96407257*
UPED 80-120 F	*96403134*	*96406057*	*69005016*	-	*96406940*	*96407257*
UPED 100-60 F	*96405833*	*96406058*	*69005016*	-	*96406940*	*96407258*
UPED 100-60 F	*96405834*	*96406058*	*69005016*	-	*96406940*	*96407258*

1) Two gasket sets (2 x kit No) are used for twin-head pumps.

Pump head

Pos.	Description	Quantity
17a	Air vent plug	1
48	Nut for split cone	1
49	Impeller	1
49b	Split cone	1
59	Bearing plate	1
61	Stop ring	1
72a	O-ring (EPDM)	1
76	Nameplate	1
109	O-ring (EPDM)	1
148	Rotor can	1
150	Stator with housing	1
153	Axial bearing	1
172	Shaft with rotor	1
-	Glycerin	1

Seal kit

Pos.	Description	Quantity
72a	O-ring155 x 4	1
	O-ring113 x 3	1
100	O-ring18 x 4	1
-	O-ring for pressure sensor7 x 1.5	1
-	Flat gasket for pressure sensor 30/24 x 2	1
-	Gasket for cylinder part on pressure sensor	1
19d	O-ring for pressure sensor 15 x 3	1

Models A, B, C

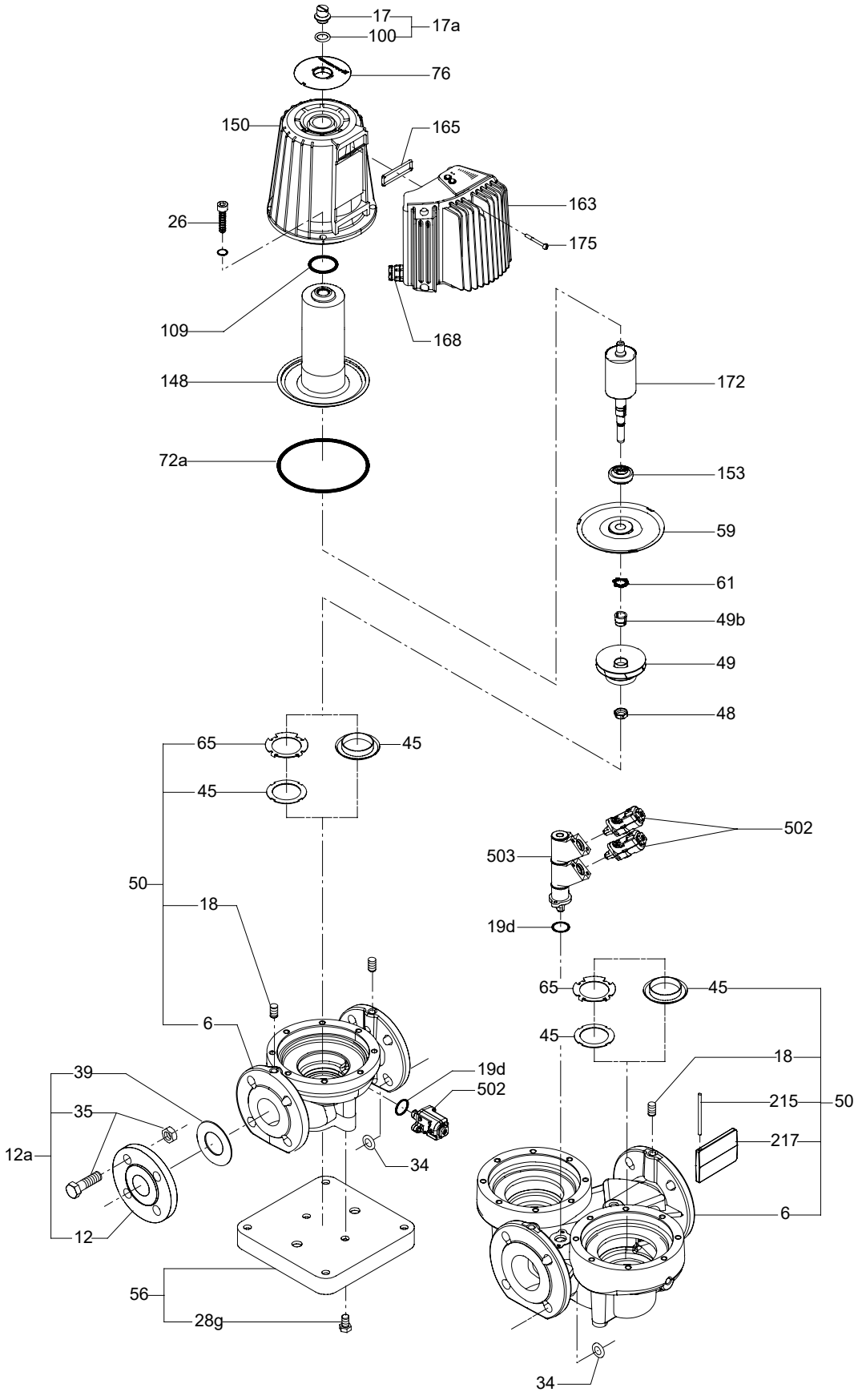
17
17a
100
76
150
165
163
26
175
109
168
148
172
72a
153
59
61
49b
49
48
65
45
45
502
503
50
18
19d
6
39
35
12a
19d
502
34
12
56
28g
65
45
45
18
215
50
217
6
34
TM011000

Model E

80/100-120 FZ

Number	Description	Pump type	Kit number
1	Pump head	UPE(D) 80/100-120 FZ	*97529251*
2	Control box, complete	UPE(D) 80/100-120 FZ	*97529279*
3	Sensor, complete	UPE(D) 80/100-120 FZ	*97529255*
4	Connection cable	UPED 80-120 FZ	*97529293*
5	Seal kit	UPE(D) 80/100-120 FZ	*97529296*
6	Flap valve	UPED 80-120 FZ	*97822546*
7	Fan (inside Control box)	UPE(D) 80/100-120 FZ	*97564038*
8	Air vent plug	UPE(D) 80/100-120 FZ	*97529299*

Model E

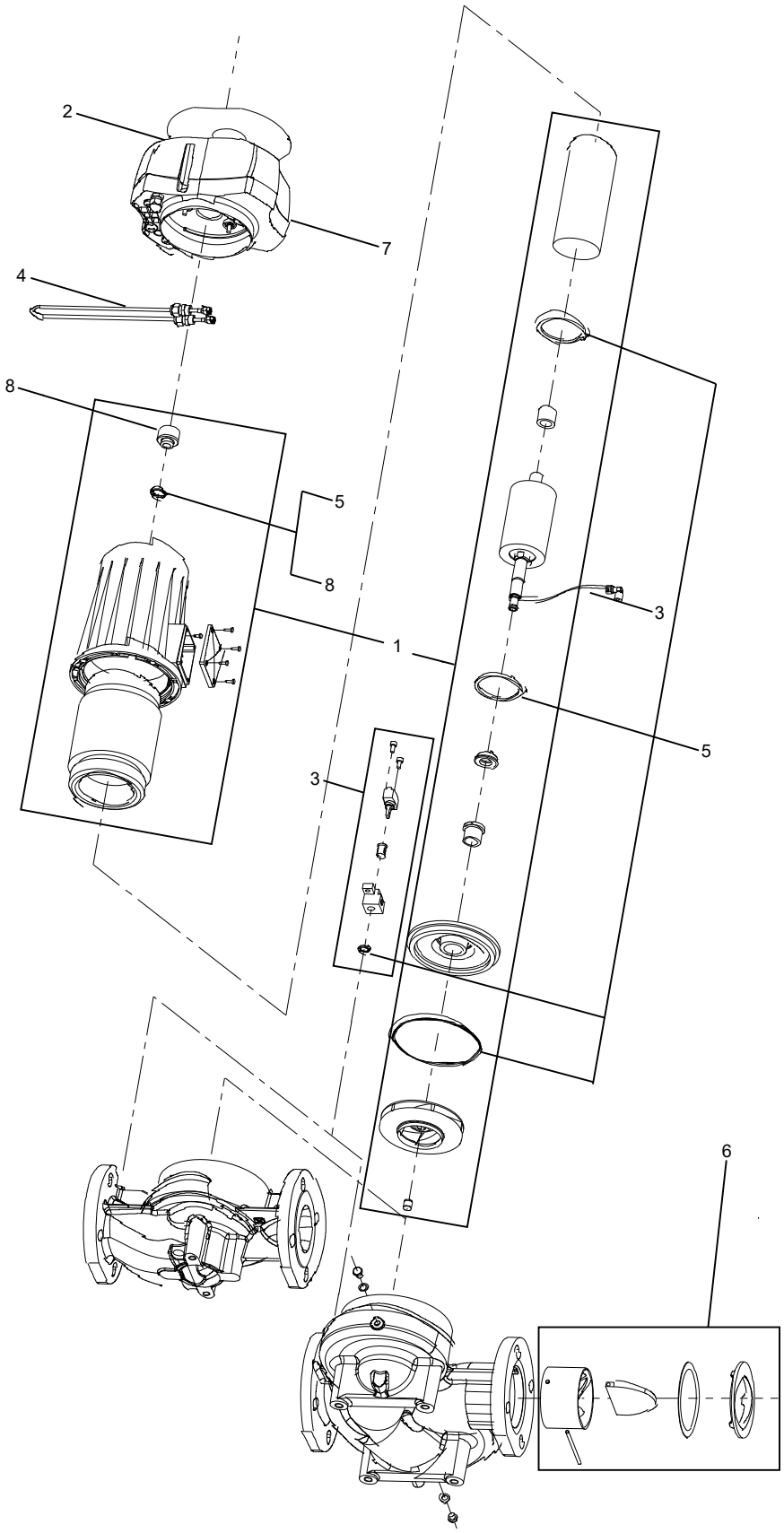

94. WL, SWL

50/60 Hz

WL1002/1502, SWL1002/1502

Pos.	Description	Pump type / Quantity	WL1002/1502		SWL1002/1502	
	Seal kit WL/WN complete incl. pos. 5, 15, 18, 25, 27, 29, 31, 34, 35, 52, 59	1	96549044		-	
1	T-DUO piston	1	96550364	96550366	96550365	96550367
2	Cylinder	1	96590317	96590321	S5598631	96590322
3	Air chamber, 4 bar	1	-			
	Air chamber, 6 bar					
5	Suction flange gasket, 1"	1	S5519553		S5518441	
	Suction flange gasket, 1 1/4"		-			
	Suction flange gasket, 1 1/2"					
6	Motor pulley, 4 bar	1	S5598569			
	Motor pulley, 6 bar		S5598569	S5598577	S5598569	S5598577
8	Connecting rod complete	1	96549014			
9	Cross-head bolt	1	96550477			
10	Cross-head	1	96550363			
11	Shaft seal, piston rod	2	96550593			
12	Seal plate	1	96588847			
13	Drip disc	1	96550473			
14	Piston rod	1	96588829			
15	Gasket for cylinder cover	1	S5598607		S5598615	
16	Air valve complete	1	96550690		96550692	
	Air valve complete with hose connection		96550694		-	
18	Gasket for lower chamber	1	S5520128		96548934	
19	Valve plate complete	1	96549009		96549041	
25	Valve rubber SWL	4	-		96550474	
	Valve rubber "S"	2	S5516430		-	
	Valve rubber "D"		S5516457		-	
26	Plug G3/8 " x 12 DIN 910	4	S5512206			
27	Plug gasket	4	S7518352			
29	Gasket for upper air chamber	1	S5520454		96548936	
30	Guide ring for piston rod	1	96588838			
31	HD packing ring	5	S5524190			
32	Stuffing box element	1	96550715			
34	Rubber clip 3/8" slotted	1	96550371			
35	Valve rubber	4	S5516449		-	
38	V-belt 0.25 kW & 0.37 KW motors	1	96548948			
	V-belt 0.55 kW & 0.75 KW motors		96548947			
	V-belt 1.1 kW & 1.5 kW motors		-			
39	Pump pulley	1	96590307			
41	Flange bearing gasket - MANILA 0.1 mm	2	-			
	Flange bearing gasket - MANILA 0.2 mm		S5598470			
43	Ball bearing 6204 for connecting rod	1	96588774			
45	Ball bearing 6202 for housing	1	96588775			
47	Ball bearing 6203 for flange	1	96588773			
50	Pressure relief valve, 4 bar	1	91043530			
	Pressure relief valve, 6 bar		91043529			
51	Bush for pressure relief valve in air chamber	1	96590274			

Pos.	Description	Pump type / Quantity	WL1002/1502		SWL1002/1502	
	Pressure flange gasket, 1"	1	S5519553		S5518441	
52	Pressure flange gasket, 1 1/4"		-			
	Pressure flange gasket, 1 1/2"		-			
53	Shaft seal flange	1	96550686			
55	O-ring for pressure relief valve	1	S5522716			
56	Gasket for pressure relief valve	1	96549016			
57	Stuffing box complete	1	96549013			
58	Oil drip washer	1	-			
59	Cylinder part gasket, Manila, 0.2 mm	1				
60	Supporting ring complete	1				
65	Belt guard complete	1	96549043			
70	Stuffing box housing, SWL	1	-			
86	Bearing cover gasket, Manila, 0.2 mm	1	-			
97	Accessory - tool for pressure relief valve	1	96590288			
98	Accessory - tool for cylinder	1	S5550329	S5550310	S5550329	S5550310
99	Accessory - tool for supporting ring	1	-			

50/60 Hz

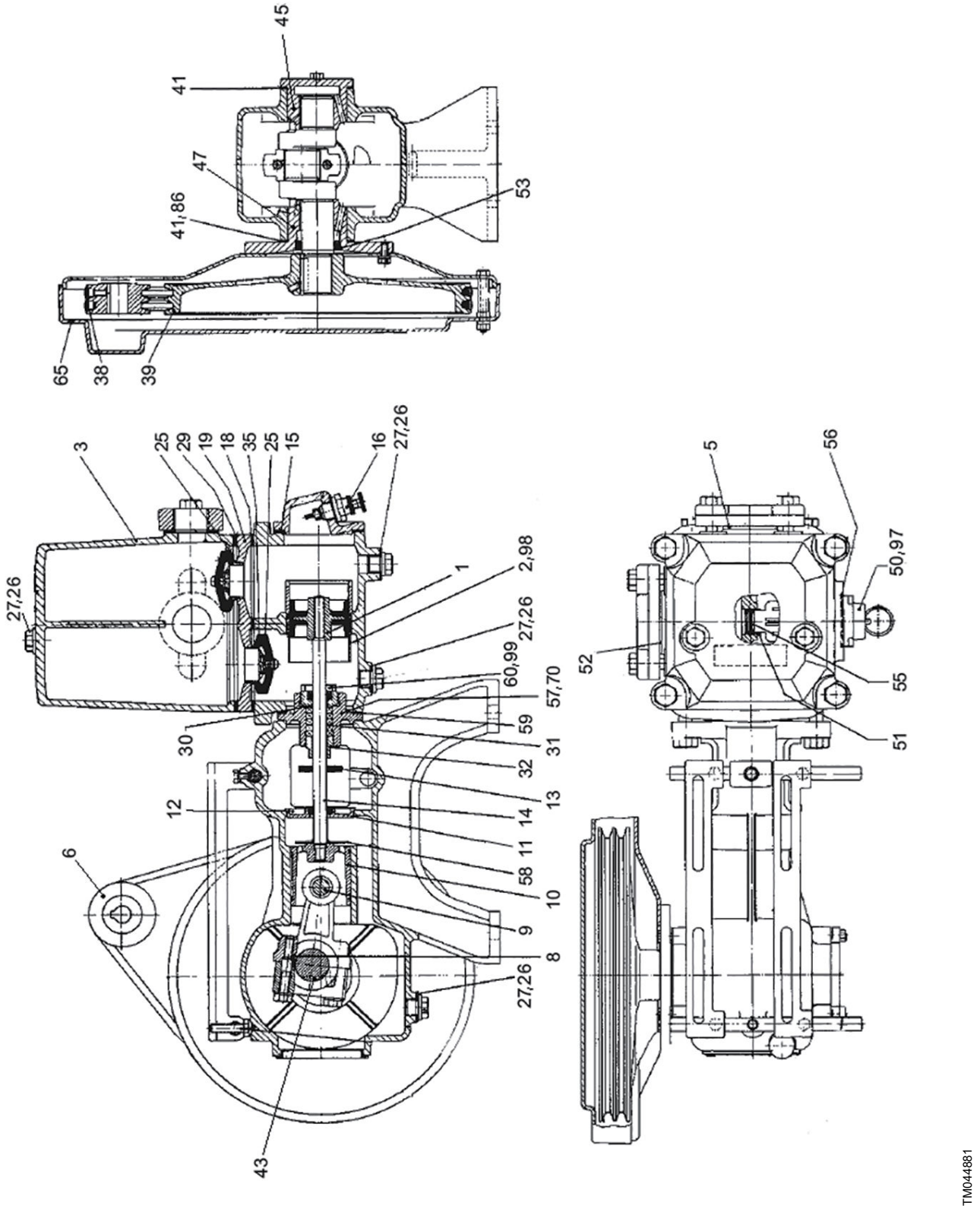
45
41
47
41,86
53
65
38
39
3
25
29
19
18
35
25
15
16
27,26
27,26
1
2,98
27,26
60,99
57,70
59
31
32
13
14
11
58
10
9
8
27,26
30
12
6
43
5
56
50,97
52
55
51
TM044881

WL2002/2402, SWL2002/2402 WL2502/3002, SWL2502/3002

Pos.	Description	Pump type / Quantity	WL2002/2402		SWL2002/2402		WL2502/3002		SWL2502/3002	
	Seal kit WL/WN complete incl. pos. 5, 15, 18, 25, 27, 29, 31, 34, 35, 52, 59	1	96549044		-		96549046		-	
1	T-DUO piston	1	96550368	96550370	96550369	96588839	96550452		S5530451	
2	Cylinder	1	96590325	96590326	S5598674	S5598690	96590276		S5538639	
3	Air chamber, 4 bar	1	-				-			
	Air chamber, 6 bar									
5	Suction flange gasket, 1"	1	S5519553		S5518441		S5519553		S5518441	
	Suction flange gasket, 1 1/4"		S5599000		S5599018		S5519561		S5518492	
	Suction flange gasket, 1 1/2"		-							
6	Motor pulley, 4 bar	1	S5598569	S5598577	S5598569	S5598577	S5501352	S5500097	S5501352	S5500097
	Motor pulley, 6 bar		S5598577					S5500100		S5500100
8	Connecting rod complete	1	96549014				96549004			
9	Cross-head bolt	1	96550477				96550591			
10	Cross-head	1	96550363				96548967			
11	Shaft seal, piston rod	2	96550593				S5520870			
12	Seal plate	1	96588847				96588848			
13	Drip disc	1	96550473				96550470			
14	Piston rod	1	96588829				96588836			
15	Gasket for cylinder cover	1	S5598607		S5598615		S5519626		S5518620	
16	Air valve complete	1	96550690		96550692		96550690		96550692	
	Air valve complete with hose connection		96550694		-		96550694		-	
18	Gasket for lower chamber	1	S5520128		96548934		S5520144		96548935	
19	Valve plate complete	1	96549009		96549041		96549000		-	
25	Valve rubber SWL	4	-		96550474		-		96550475	
	Valve rubber "S"	2	S5516430		-		S5516481		-	
	Valve rubber "D"		S5516457		-		S5516465		-	
26	Plug G3/8" x 12 DIN 910	4	S5512206							
27	Plug gasket	4	S7518352							
29	Gasket for upper chamber	1	S5520454		96548936		S5520470		96548937	
30	Guide ring for piston rod	1	96588838				96588828			
31	HD packing ring	5	S5524190				S9524204			
32	Stuffing box element	1	96550715				96549897			
34	Rubber clip 3/8" slotted	1	96550371							
35	Valve rubber	4	S5516449		-		S5516473		-	
38	V-belt 0.25 kW & 0.37 KW motors	1	96548948				96548941			
	V-belt 0.55 kW & 0.75 KW motors		96548947							
	V-belt 1.1 kW & 1.5 kW motors		-							
39	Pump pulley	1	96590307				96590281			
41	Flange bearing gasket - MANILA 0.1 mm	2	-				-			
	Flange bearing gasket - MANILA 0.2 mm		S5598470				S5519294			
43	Ball bearing 6204 for connecting rod	1	96588774				-			
45	Ball bearing 6202 for housing	1	96588775							
47	Ball bearing 6203 for flange	1	96588773							
50	Pressure relief valve, 4 bar	1	91043530							
	Pressure relief valve, 6 bar		91043529							
51	Bush for pressure relief valve in air chamber	1	96590274							
52	Pressure flange gasket, 1"	1	S5519553		S5518441		S5519553		S5518441	
	Pressure flange gasket, 1 1/4"		S5599000		S5599018		S5519561		S5518492	
	Pressure flange gasket, 1 1/2"		-							
53	Shaft seal flange	1	96550686				96550683			

Pos.	Description	Pump type	WL2002/2402		SWL2002/2402		WL2502/3002	SWL2502/3002
		Quantity						
55	O-ring for pressure relief valve	1	S5522716					
56	Gasket for pressure relief valve	1	96549016					
57	Stuffing box complete	1	96549013				96548994	S5593478
58	Oil drip washer	1	-				S5539368	
59	Cylinder part gasket, Manila, 0.2 mm	1					-	
60	Supporting ring complete	1	96549043				S5551279	
65	Belt guard complete	1	-				S9608408	
70	Stuffing box housing, SWL	1	-					
86	Bearing cover gasket, Manila, 0.2 mm	1	96590288				-	
97	Accessory - tool for pressure relief valve	1	96590288					
98	Accessory - tool for cylinder	1	S5550299	S5550264	S5550299	S5550264	S5548820	
99	Accessory - tool for supporting ring	1	-				S9548782	

50/60 Hz

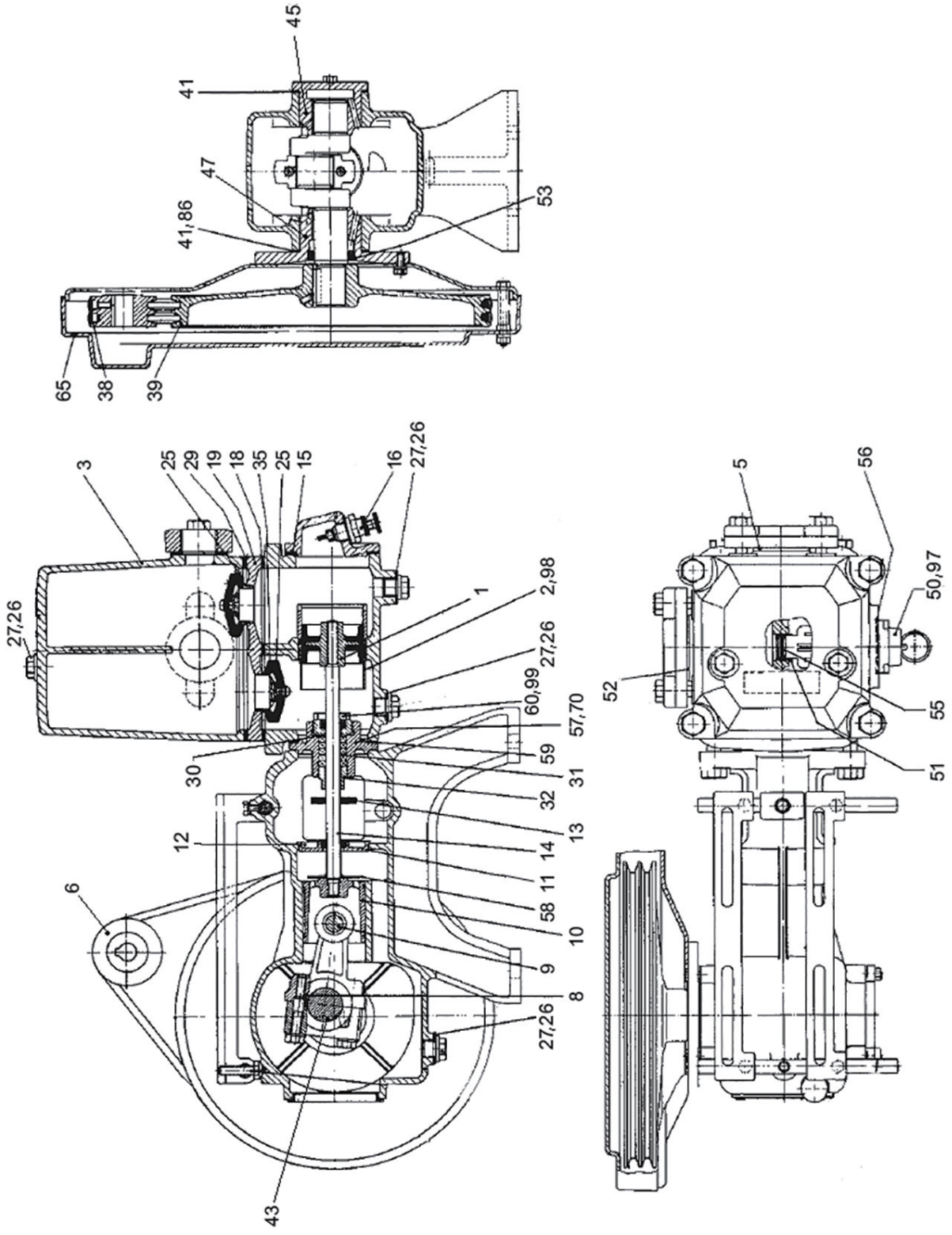
45
41
47
41,86
53
65
38
39
3
25
29
19
18
35
25
15
16
27,26
27,26
1
2,98
27,26
60,99
57,70
59
31
32
13
14
11
58
10
9
8
27,26
43
30
12
6
5
56
50,97
52
55
51
TM044881

WL4000/5000, SWL4000/5000 WN201/301, WN500

Pos.	Description	Pump type / Quantity	WL4000/5000		SWL4000/5000		WN201/301		WN500
	Seal kit WL/WN complete incl. pos. 5, 15, 18, 25, 27, 29, 31, 34, 35, 52, 59	1	96588821		-		96588817	96588818	96588819
1	T-DUO piston	1	96548960		S5530948	S5530948	96550452	96550453	96549011
2	Cylinder	1	96590278		S5538663	S5538663	96590253	96590254	96590279
3	Air chamber, 4 bar	1	96588791	96588792	-				S5552399
	Air chamber, 6 bar		96588793	96588794					96588796
5	Suction flange gasket, 1"	1	-				S5519553		-
	Suction flange gasket, 1 1/4"		S5519561	-	S5518492	-	S5599000	S5519561	
	Suction flange gasket, 1 1/2"		S5519588	S5519588	S5518522	S5518522	-		S5519588
6	Motor pulley, 4 bar	1	S5501379	96590221	S5501379	96590221	96590222	96590223	S5501484
	Motor pulley, 6 bar								
8	Connecting rod complete	1	96588837				96549005		96590303
9	Cross-head bolt	1	96550592				96550590		96550592
10	Cross-head	1	96590285				96548896		96590285
11	Shaft seal, piston rod	2	S5518299				S5520870		S5518299
12	Seal plate	1	96549898				96590246		96549898
13	Drip disc	1	96550471				96550470		96550471
14	Piston rod	1	96588835				96588825		96588831
15	Gasket for cylinder cover	1	S5519693		S5518697		S5598607	S5505234	S5519715
16	Air valve complete	1	96550690		96550692		96550690		
	Air valve complete with hose connection		-						
18	Gasket for lower chamber	1	S5520250		S5520268		S5520128	S5520144	S5520250
19	Valve plate complete	1	96549001		-		96549009	96549000	96549001
25	Valve rubber SWL	4	-		96550476		-		
	Valve rubber "S"	2	S5516503		-		S5516430	S5516481	S5516503
	Valve rubber "D"		S5516490				S5516457	S5516465	S5516490
26	Plug G3/8" x 12, DIN 910	4	S5512206						
27	Plug gasket	4	S7518352						
29	Gasket for upper air chamber	1	S5520560		S5520578		S5520454	S5520470	S5520560
30	Guide ring for piston rod	1	-				96588828		-
31	HD packing ring	5	S5524212				S9524204		S5524212
32	Stuffing box element	1	96549901				96549897		96549901
34	Rubber clip 3/8" slotted	1	96550371						
35	Valve rubber	4	S5516511		-		S5516449	S5516473	S5516511
38	V-belt 0.25 kW & 0.37 KW motors	1	96548946				96548942		96548944
	V-belt 0.55 kW & 0.75 KW motors								
	V-belt 1.1 kW & 1.5 kW motors								
39	Pump pulley	1	96590282				96590252		S5539457
41	Flange bearing gasket - MANILA 0.1 mm	2	S5519279				S5501875		-
	Flange bearing gasket - MANILA 0.2 mm		S5519278				S5501883		S5519421
43	Ball bearing 6204 for connecting rod	1	-						
45	Ball bearing 6202 for housing	1	-				96588775		-
47	Ball bearing 6203 for flange	1					96550450		
50	Pressure relief valve, 4 bar	1	-				91043530		
	Pressure relief valve, 6 bar						91043529		
51	Bush for pressure relief valve in air chamber	1					96590274		
52	Pressure flange gasket, 1"	1					S5519553	S5519553	
	Pressure flange gasket, 1 1/4"		S5519561	-	S5518492	-	S5599000	S5519561	
	Pressure flange gasket, 1 1/2"		S5519588		S5518522	S5518522	-		S5519588
53	Shaft seal flange	1	96550685				96550686		96550682
55	O-ring for pressure relief valve	1	-				S5522716		-
56	Gasket for pressure relief valve	1	S5519979				96549016		S5519979

Pos.	Description	Pump type / Quantity	WL4000/5000	SWL4000/5000	WN201/301		WN500
57	Stuffing box complete	1	96548995	-	96548998		96548999
58	Oil drip washer	1	96590258		S5507512		96590258
59	Cylinder part gasket, Manila, 0.2 mm	1	S5519286		-		S5519286
60	Supporting ring complete	1	96550712		S5551279		96550712
65	Belt guard complete	1	96590226		96549048		S5130966
70	Stuffing box housing, SWL	1	-	S5530654	-		
86	Bearing cover gasket, Manila, 0.2 mm	1	-		S5501859		-
97	Accessory - tool for pressure relief valve	1	-		96590288		
98	Accessory - tool for cylinder	1	S5548839		S5548820	S5548928	
99	Accessory - tool for supporting ring	1	S9548782				

50/60 Hz

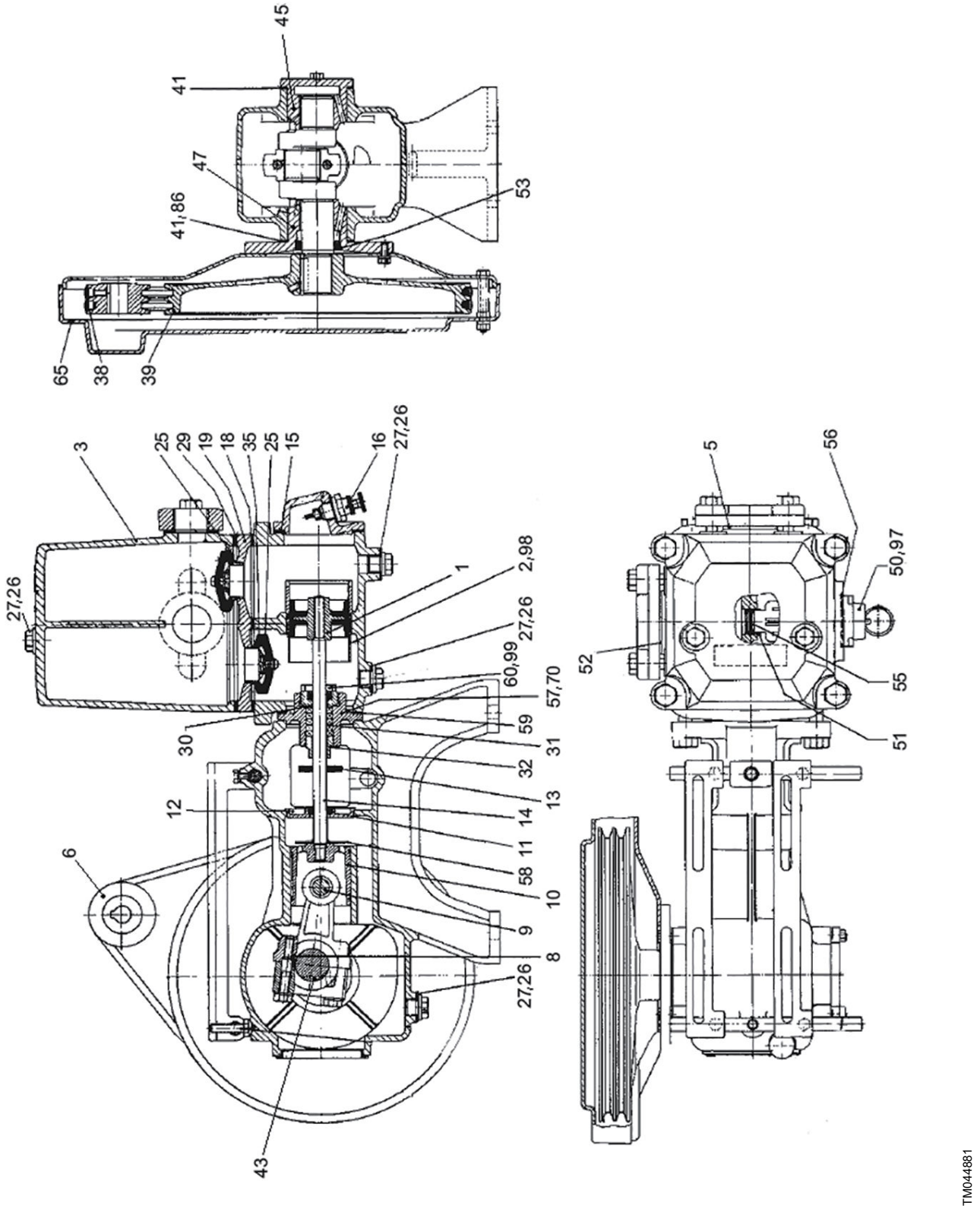
45
41
47
41,86
53
65
38
39
3
25
29
19
18
35
25
15
16
27,26
27,26
1
2,98
27,26
60,99
57,70
59
31
32
13
14
11
58
10
9
8
27,26
30
12
6
43
5
56
50,97
52
55
51
TM044881

Pos.	Description	Quantity	Product number
71	Pressure switch, 4 bar	1	96548951
	Pressure switch, 6 bar		96548953
73	Automatic air control V G1 1/4" complete, FILIA/FILIUS	1	96549010
75	Motor 1 x 220 V-4 0.25 kW, B3	1	96591765
	Motor 1 x 220 V-4 0.37 kW B3		96550628
	Motor 1 x 220 V-4 0.55 kW B3		96550629
	Motor 1 x 220 V-4 0.75 kW B3		96588856
76	Pressure gauge, 0-6 bar	1	96588823
77	Rubber pad 7 x 11 x 10	1	96590259
79	Hose clamp 34-37	1	96590255
	Hose clamp 37-40		S5510726
80	Hose D35/25 x 270	1	96590261
	Hose D35/25 x 210		96590260
	Hose D35/25 x 180		96590262
81	Elbow R3/4" x 60	1	96550456
	Elbow R3/4" x 100		96550457
82	Hose 10/6 x 1500	1	96590263

Accessories

	Automatic air control V/1 G1/2" complete, aeration	1	S5130443
	Automatic air control V/1 G1 1/4" complete, aeration		96548888
	Automatic air control V/2 G1/2" complete, venting		S5130460
	Automatic air control V/2 G1 1/4" complete, venting		96548889
	Baffle D50 x 2 holes 7.5	1	96590380
	Baffle D50 x 2 holes 9.0		96590381
	Baffle D50 x 2 holes 10.0		96590382
	Floater for automatic air control	1	96590257
	O-ring D36 x 6 for automatic air control	1	S5522651

50/60 Hz

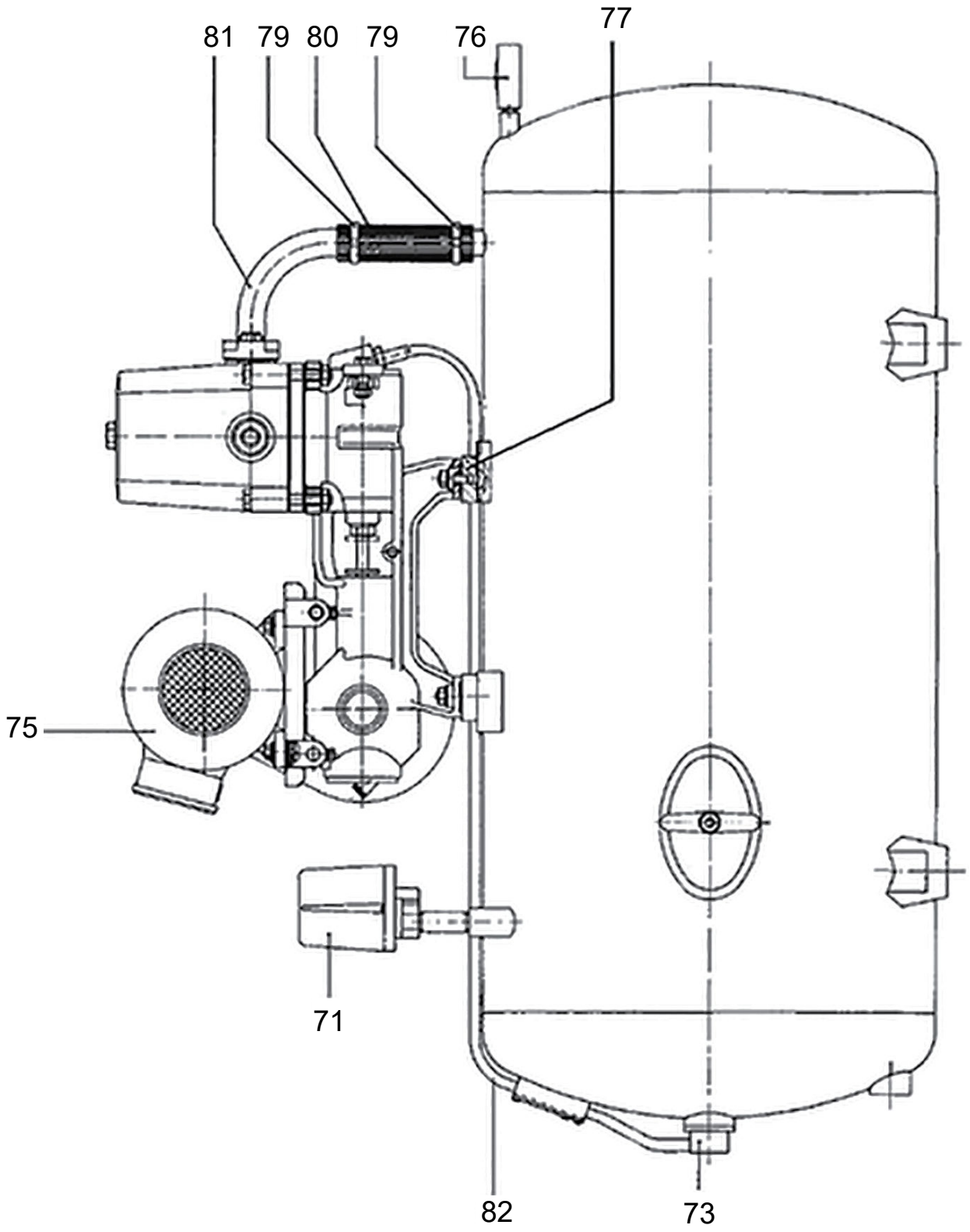

95. Recommended spare parts: AMD, AMG, AFG, SRP

50/60 Hz

Customer Information

Project title:	Customer name:
Reference number:	Customer number:
Customer contact:	Customer phone number: (____)
	Fax number: (____)

Pump information

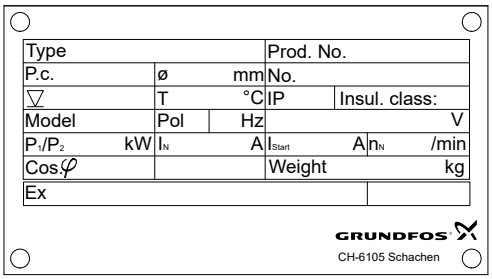

Quotation made by

Company name:
Prepared by:
Phone number: (____)
Fax number: (____)
Date:
Quote number:

Recommended spare parts

	Recommended service parts				
	AMD.XX.45		AMG, AFG, SRP		
Kit - Spare - Bulk	2 years units per pump	5 years units per pump	2 years units per pump	5 years units per pump	Product number
Kit, Shaft seal, outer	1	3			
Kit, Shaft seal, inner		1			
Kit, Bearing		1			
Kit, Sealing		1		1	
Kit, Radial sealing			2	4	
Kit, Shaft seal				1	
Kit, Bearing motor				1	
Oil [1)]	1	3		1	

1) See service instruction for amount and type.

Above recommendations are based on:
Agitators running in normal operation should be checked every 3000 operating hours or at least once a year.
If the stirred liquid is very muddy or sandy, check the pump at shorter intervals.

96. Recommended spare parts: AP, APG

50/60 Hz

Customer Information

Project title:	Customer name:
Reference number:	Customer number:
Customer contact:	Customer phone number: (____)
	Fax number: (____)

Pump information

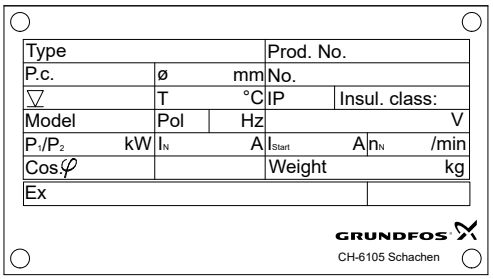

Quotation made by

Company name:
Prepared by:
Phone number: (____)
Fax number: (____)
Date:
Quote number:

Recommended spare parts

	Recommended service parts						
	1 pump		2 to 3 pumps		4 to 7 pumps		
Kit - Spare - Bulk	2 years units per pump	5 years units per pump	2 years units per pump	5 years units per pump	2 years units per pump	5 years units per pump	Product number
Kit, Wear Part Kit	1	2	2	3	4	8	
Oil [1)]	1	2	2	3	4	8	

1) See service instruction for amount and type.

Above recommendations are based on:
Agitators running in normal operation should be checked every 3000 operating hours or at least once a year.
If the stirred liquid is very muddy or sandy, check the pump at shorter intervals.

97. Recommended spare parts: BM, BME, BMET

BM

50/60 Hz Model C

Recommended spare parts for two to five years' operating time

Type	Max. number of stages	Pump wear parts kit S, NS version	Pump wear parts kit NE, S version
BM 3A / 5A	12		96440231
	15	055504	
	24	105546	
	25		96440230
	30	105547	
	33		96440229
	39	105059	
	45		96440228
	48	095059	
	60	095060	96439727
BM 8A	10	96428935	96428939
	18	96428936	96428940
	25	96428937	96428941
	37	96428938	
BM 17	5	96421723	96440235
	16	96421724	96440233
	24	96421725	96440237
	40	96440238	96440239
BM 30	5	96421732	96440241
	16	96421733	96440243
	27	96440244	96440245
	35	96440246	96440247
BM 46	6	96440248	96440249
	10	96440250	96440251
	16	96440252	96440253
	20	96440254	96440255
BM 60	6	96440369	96440370
	10	96440371	96440372
	16	96440373	96440374
	20	96440375	96440376
BM 77	8	96440256	96440257
	14	96440258	96440259
	20	96440260	96440261
BM 95	8	96440715	96440718
	14	96440716	96440719
	20	96440717	96440720
BM 125	4	96440262	96440263
	6	96440264	96440265
	9	96440266	96440267

Number of pumps	Number of wear parts kit	Motor complete	Motor cable
1-2	1	1	1
3-5	2	1	1
6-10	3	1	1
11-20	4	2	2

BME, BMET

Recommended spare parts for two to five years' operating time

Grease

Description	For motor	Part number
Grease Unirex 2N, 400 g cartridge	ABB	*96616737*
Grease Unirex N3, 400 g cartridge and grease gun	Siemens	*96741461*
Grease Klüberquiet BQ 72-72, 400 g cartridge	VEM	*96616736*

Oil for pulley head

Description	Part number
1 litre	*96586847*

For each BME(T) it is recommended to use one set of all spare parts including one set of V-belts and one set of motor bearings.

Pulley head

Description	Quantity	Part number
Rotating shaft with thrust bearing	1	*96586853*
Stationary thrust bearing	1	*96586818*
Shaft seal	1	*96586850*
Ball bearings	2	*00ID0380*
Sealing kit	1	*00145177*
Pulley head complete, 7 grooves		*96693978*
Pulley head complete, 9 grooves		*96693979*

Tools

Description	Part number
V-belt tension tester	*96575457*
V-belt gauge	*96575458*
Grease gun	*96656481*

Turbine pulley head (BMET only)

Description	Quantity	Part number
Rotating shaft with thrust bearing	1	*96586852*
Stationary thrust bearing	1	*96586818*
Sealing kit	1	*00145178*
Turbine wheel D160	1	*96892093*
Turbine wheel D185	1	*96892199*
Turbine pulley head complete	1	*96863885*

V-belt

Nominal diameter [mm]	Type	Part number
1250	XPB	*96584500*
1320	XPB	*96584501*
1400	XPB	*96584502*
1450	XPB	*96584503*
1500	XPB	*96584504*
1550	XPB	*96584505*
1600	XPB	*96584506*
1650	XPB	*96584507*
1700	XPB	*96584508*
1800	XPB	*96584509*

Wear parts kit, pump

Type	Max. number of stages	Part number N and R versions
BME(T) 17	10	*96604294*
	20	*96604295*
	30	*96604296*
BME(T) 30	10	*96604297*
	18	*96604298*
	26	*96604299*
BME(T) 46	8	*96604330*
	13	*96604331*
	17	*96604333*
BME(T) 60	8	*96604334*
	13	*96604335*
	17	*96604336*

98. Recommended spare parts: CM, CME

50/60 Hz

Customer information

Project title:	Customer name:
Reference number:	Customer number:
Customer contact:	Customer phone number: (____)
	Fax number: (____)

Pump information

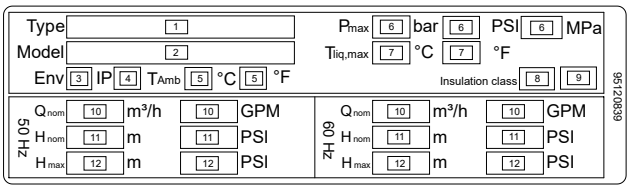

Quotation made by

Company name:

Prepared by:

Phone number: (____)

Fax number: (____)

Date:

Quote number:

Motor information

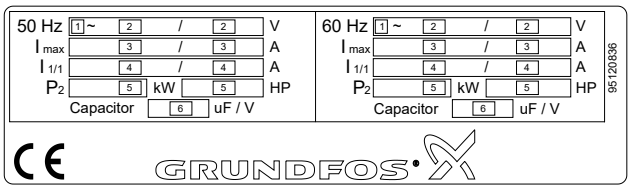

Pump and motor

Spare part/service kit	Recommended spare parts/service kits for...		
	2 years operation	5 years operation	Product number of part/kit
Gasket and seal kit	1 kit	2 kits	
Repair kit, neck ring	1 kit	2 kits	
Motor bearing kit	-	1 kits	

99. Recommended spare parts: CR, CRI, CRN 1 to 150

50/60 Hz

Customer Information

Project title:	Customer name:
Reference number:	Customer number:
Customer contact:	Customer phone number: (____)
	Fax number: (____)

Pump information

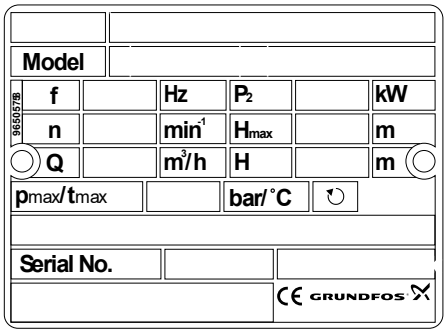

CR, CRI, CRN 1 to 20

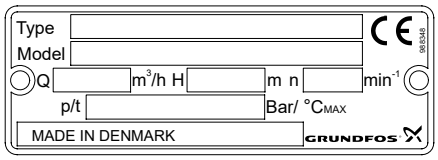

CR, CRN 32 to 150

Quotation made by

Company name:
Prepared by:
Phone number: (____)
Fax number: (____)
Date:
Quote number:

Recommended spare parts

	Recommended service parts				
	CR, CRN 1,3 & 5		CR, CRI, CRN 10, 15 & 20		
Kits	2 years units per pump	5 years units per pump	2 years units per pump	5 years units per pump	Product number of part/kit
Wear part kit	1	1	1	1	
Shaft seal kit	1	2	1	2	
O-ring kit	1	2	1	2	
Chamber stack		1		1	
Motor bearings		1		1	

	Recommended service parts				
	CR, CRN 32, 45, 64 & 90		CR, CRN 120, 150		
Kits	2 years units per pump	5 years units per pump	2 years units per pump	5 years units per pump	Product number of part/kit
Wear part kit	1	1	1	1	
Shaft seal kit	1	2	1	2	
O-ring kit	1	2	1	2	
Chamber stack		1		1	
Bearing kit	1	1	1	1	
Motor bearings		1		1	

100. Recommended spare parts: DP, EF AUTOADAPT

50/60 Hz

Customer Information

Project title:	Customer name:
Reference number:	Customer number:
Customer contact:	Customer phone number: (____)
	Fax number: (____)

Pump information

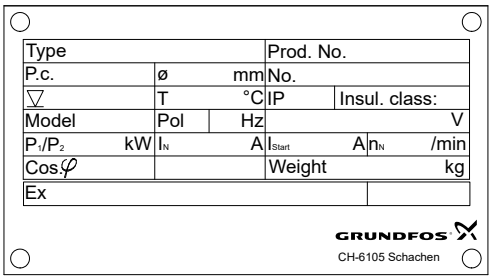

Quotation made by

Company name:
Prepared by:
Phone number: (____)
Fax number: (____)
Date:
Quote number:

Recommended spare parts

	Recommended service parts						
	1 pump		2 to 3 pumps		4 to 7 pumps		
Kit - Spare - Bulk	2 years units per pump	5 years units per pump	2 years units per pump	5 years units per pump	2 years units per pump	5 years units per pump	Product number
Kit, Shaft seal	1	2	2	3	4	8	
Kit, O-ring	1	2	2	3	4	8	
Kit, Impeller	0	1	0	2	0	4	
Kit, Bearing	0	1	0	2	0	4	
Kit, Dry-running sensor [1)]	0	1	0	1	0	1	
Kit, level sensor [1)]	0	1	0	1	0	1	
Oil [2)]	0	1	0	1	0	1	

1) Only for AUTO$_{ADAPT}$.

2) See service instruction for amount and type.

Above recommendations are based on:
Agitators running in normal operation should be checked every 3000 operating hours or at least once a year.
If the stirred liquid is very muddy or sandy, check the pump at shorter intervals.

101. Recommended spare parts: DW

50/60 Hz

Customer Information

Project title:	Customer name:
Reference number:	Customer number:
Customer contact:	Customer phone number: (____)
	Fax number: (____)

Pump information

Type			Prod. No.		
P.c.	ø mm		No.		
▽	T °C		IP	Insul. class:	
Model	Pol	Hz			V
P_1/P_2 kW	I_N A		I_{Start} A	n_N	/min
Cosφ			Weight		kg
Ex					

GRUNDFOS
CH-6105 Schachen

Quotation made by

Company name:
Prepared by: (____)
Phone number:)
Fax number: (____)
Date:)
Quote number:

Recommended spare parts

	Recommended service parts						
	1 pump		2 to 3 pumps		4 to 7 pumps		
Kit - Spare - Bulk	2 years units per pump	5 years units per pump	2 years units per pump	5 years units per pump	2 years units per pump	5 years units per pump	Product number
Kit, Shaft seal	1	2	2	3	4	8	
Kit, Impeller	0	1	0	2	0	4	
Kit, Wear Parts	0	1	0	2	0	4	
Kit, Repair	0	1	0	2	0	4	
Oil [1)]	1	2	2	3	4	8	

1) See service instruction for amount and type.

Above recommendations are based on:
Agitators running in normal operation should be checked every 3000 operating hours or at least once a year.
If the stirred liquid is very muddy or sandy, check the pump at shorter intervals.

102. Recommended spare parts: DWK, DPK

50/60 Hz

Customer Information

Project title:	Customer name:
Reference number:	Customer number:
Customer contact:	Customer phone number: (____)
	Fax number: (____)

Pump information

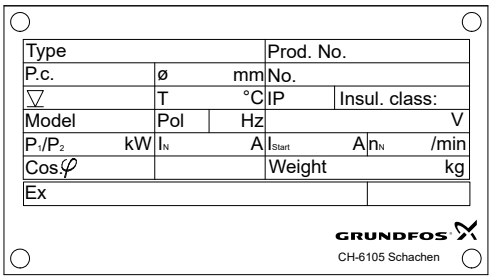

Quotation made by

Company name:
Prepared by:
Phone number: (____)
Fax number: (____)
Date:
Quote number:

Recommended spare parts

	Recommended service parts						
	1 pump		2 to 3 pumps		4 to 7 pumps		
Kit - Spare - Bulk	2 years units per pump	5 years units per pump	2 years units per pump	5 years units per pump	2 years units per pump	5 years units per pump	Product number
Kit, Shaft seal	1	2	2	3	4	8	
Kit, O-ring	1	2	2	3	4	8	
Kit, Impeller	0	1	0	2	0	4	
Kit, Bearing	0	1	0	2	0	4	
Oil [1)]	1	2	2	3	4	8	

1) See service instruction for amount and type.

Above recommendations are based on:
Agitators running in normal operation should be checked every 3000 operating hours or at least once a year.
If the stirred liquid is very muddy or sandy, check the pump at shorter intervals.

103. Recommended spare parts: KPL, KWM

50/60 Hz

Customer Information

Project title:	Customer name:
Reference number:	Customer number:
Customer contact:	Customer phone number: (____)
	Fax number: (____)

Pump information

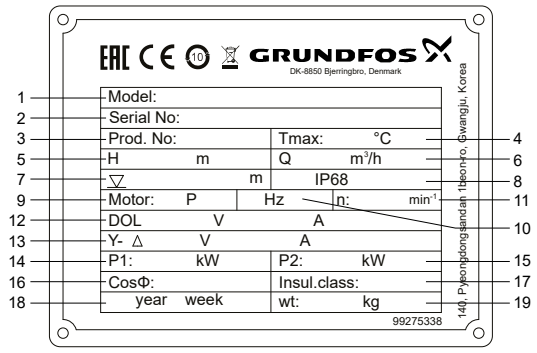

Quotation made by

Company name:
Prepared by: (____
Phone number:)
Fax number: (____
Date:)
Quote number:

Recommended spare parts

	Recommended service parts						
	1 pump		2 to 3 pumps		4 to 7 pumps		
Kit - Spare - Bulk	2 years units per pump	5 years units per pump	2 years units per pump	5 years units per pump	2 years units per pump	5 years units per pump	Product number
Kit, O-ring	1	2	2	3	4	8	
Kit, Bearing	1	2	2	3	4	8	
Kit, Mechanical seal	0	1	0	2	0	4	
Kit, Power lock	0	1	0	2	0	4	
Kit, Turbulence optimizer	0	1	0	2	0	4	
Kit, Impeller	0	1	0	2	0	4	
Oil [1]	0	1	0	2	0	4	

1) See service instruction for amount and type.

Above recommendations are based on:

The above exchange terms have been calculated based on the worst case situation, so the actual exchange terms shall be longer.

Depends on field situation, maintenance has to be considered through a proper decision by site engineers.

104. Recommended spare parts: LS

50/60 Hz

Customer Information

Project title:	Customer name:
Reference number:	Customer number:
Customer contact:	Customer phone number: (____)
	Fax number: (____)

Pump information	Quotation made by
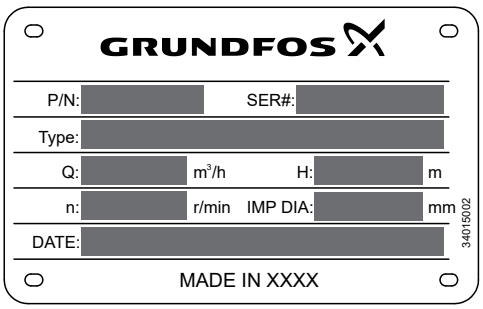	Company name: Prepared by: Phone number: (____) Fax number: (____) Date: Page 1 of: Quote number:

Recommended spare parts

Service kit	Recommended spare parts/service kits for...		
	2 years operation	5 years operation	Product number
Shaft seal kit	1 kit	2 kits	
Gasket Kit	1 kit	2 kits	
Wear ring kit	1 kit	2 kits	
Hardware Kit	-	1 kit	
Bearing Kit	-	1 kit	
Impeller Kit	-	1 kit	
Shaft sleeve Kit	-	1 kit	
Motor bearings kit	-	1 kit	

105. Recommended spare parts: NB, NBG, NK, NKG

Customer Information

Project title:	Customer name:
Reference number:	Customer number:
Customer contact:	Customer phone number: (____)
	Fax number: (____)

Pump information	**Quotation made by**
	Company name:
	Prepared by:
	Phone number: (____)
	Fax number: (____)
	Date: Page 1 of:
	Quote number:

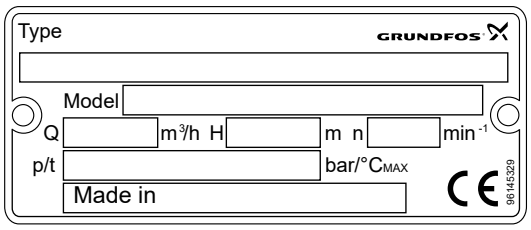

Pump with mechanical shaft seal

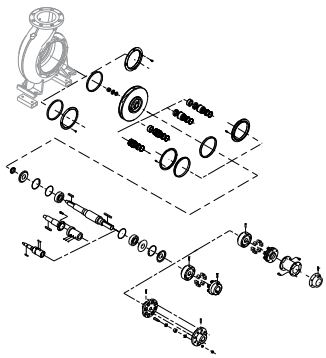

Spare part/ service kit	NB	NBG	NK	NKG	Recommended spare parts/service kits for... 2 years operation	5 years operation	Product number of part/kit
Shaft seal (Primary)	●	●	●	●	1 kit	2 kits	
Shaft seal (Secondary)	-	-	-	●	1 kit	2 kits	
Shaft seal - Cartridge	-	-	-	●	-	1 kit	
Pump O-ring, kit 1	●	●	●	●	1 kit	2 kits	
Pump O-ring, kit 2	-	-	-	●	1 kit	2 kits	
Pump O-ring, kit 3	-	-	-	●	1 kit	2 kits	
Wear rings, pos. 45	●	●	●	●	1 kit	2 kits	
Wear rings, pos. 45b	●	●	●	●	1 kit	2 kits	
Coupling complete	-	-	●	●	-	1 kit	
Rubber in coupling	-	-	●	●	1 kit	2 kits	
Shaft, Standard	●	●	●	●	-	1 kit	
Shaft, Heavy-duty	-	-	-	●	-	1 kit	
Impeller	●	●	●	●	-	1 pcs	
Nut, key and washer for impeller	●	●	●	●	-	1 kit	
Std. bearings in bearing bracket	-	-	●	●	1 kit	1 kit	

Pump with stuffing box

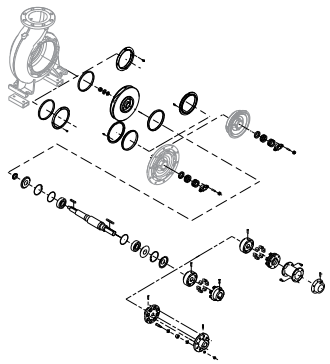

Spare part/ service kit	NB, NBG	NK, NKG	Recommended spare parts/service kits for...		
			2 years operation	5 years operation	Product number of part/kit
Stuffing box rings	-	●	1 kit	2 kits	
Pump O-ring, kit 1	-	●	1 kit	2 kits	
Pump O-ring, kit 2	-	●	1 kit	2 kits	
Pump O-ring, kit 3	-	●	1 kit	2 kits	
Wear rings, pos. 45	-	●	1 kit	2 kits	
Wear rings, pos. 45b	-	●	1 kit	2 kits	
Coupling complete	-	●	-	1 kit	
Rubber in coupling	-	●	1 kit	2 kits	
Shaft inclusive shaft sleeve	-	●	-	1 kit	
Impeller	-	●	-	1 pcs	
Nut, key and washer for impeller	-	●	-	1 kit	
Bearings in bearing bracket	-	●	1 kit	1 kit	

106. Recommended spare parts: S pumps

50/60 Hz

Customer Information

Project title:	Customer name:
Reference number:	Customer number:
Customer contact:	Customer phone number: (____)
	Fax number: (____)

Pump information

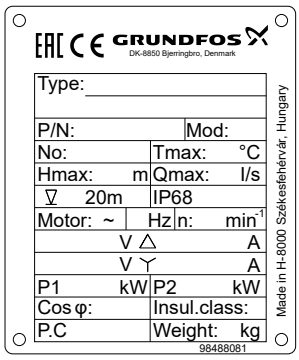

Quotation made by

Company name:

Prepared by:

Phone number: (____)

Fax number: (____)

Date: Page 1 of:

Quote number:

Recommended spare parts

	Recommended service parts				
	1 to 3 pumps, for		4 to 7 pumps, for		
Kits	2 years operation	5 years operation	2 years operation	5 years operation	Product number
Shaft seal kit, primary	1	2	4	8	
Shaft seal kit, secondary	0	1	0	4	
Bearing kit	0	1	0	4	
Moisture switch kit	0	1	0	4	
O-ring kit for oil inspection plugs	1 per pump/year	1 per pump/year	1 per pump/year	1 per pump/year	
O-ring kit pump	0	1	0	4	
Impeller kits, standard sizes [1)]	0	1	0	4	
Suction cover kit [1)]	0	1	0	4	
Pump housing / volute [1)]	0	1	0	4	

1) Only necessary if the sewage contains more than 0.003 % sand (in volume).

Note: Make sure you have the needed amount of oil for a replacement.

107. Recommended spare parts: SE, SL 9-30 kW

50/60 Hz

Customer Information

Project title:	Customer name:
Reference number:	Customer number:
Customer contact:	Customer phone number: (____)
	Fax number: (____)

Pump information

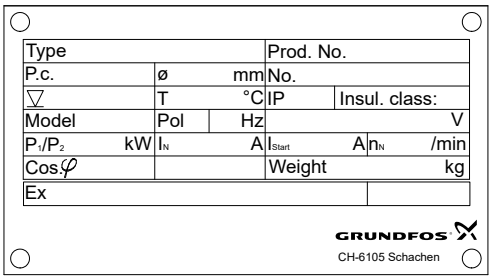

Quotation made by

Company name:
Prepared by:
Phone number: (____)
Fax number: (____)
Date:
Quote number:

Recommended spare parts

	Recommended service parts						
	1 pump		2 to 3 pumps		4 to 7 pumps		
Kit - Spare - Bulk	2 years units per pump	5 years units per pump	2 years units per pump	5 years units per pump	2 years units per pump	5 years units per pump	Product number
Kit, Shaft seal	1	2	2	3	4	8	
Kit, O-ring	1	2	2	3	4	8	
Kit, Impeller fixing	0	1	0	2	0	4	
Kit, Impeller	0	1	0	2	0	4	
Kit, Bearing	0	1	0	2	0	4	
Kit, Moisture switch	0	1	0	2	0	4	
Kit, plug	0	1	0	2	0	4	
Liquid for sub. Motor [1)]	0	1	0	2	0	4	

1) See service instruction for amount and type.

Above recommendations are based on:
Agitators running in normal operation should be checked every 3000 operating hours or at least once a year.
If the stirred liquid is very muddy or sandy, check the pump at shorter intervals.

108. Recommended spare parts: SEG

50/60 Hz

Customer Information

Project title:	Customer name:
Reference number:	Customer number:
Customer contact:	Customer phone number: (____)
	Fax number: (____)

Pump information

Type			Prod. No.		
P.c.	ø mm		No.		
▽	T °C		IP	Insul. class:	
Model	Pol	Hz			V
P_1/P_2 kW	I_N	A	I_{Start}	A n_N	/min
Cosφ			Weight		kg
Ex					

GRUNDFOS
CH-6105 Schachen

Quotation made by

Company name:
Prepared by: (____)
Phone number:)
Fax number: (____)
Date:)
Quote number:

Recommended spare parts

	Recommended service parts						
	1 pump		2 to 3 pumps		4 to 7 pumps		
Kit - Spare - Bulk	2 years units per pump	5 years units per pump	2 years units per pump	5 years units per pump	2 years units per pump	5 years units per pump	Product number
Kit, Shaft seal	1	2	2	3	4	8	
Kit, O-ring	1	2	2	3	4	8	
Kit, Impeller	0	1	0	2	0	4	
Kit, Bearing	0	1	0	2	0	4	
Kit, Grinder	0	1	0	2	0	4	
Kit, Dry-running sensor*	0	1	0	1	0	1	
Kit, level sensor [1)]	0	1	0	1	0	1	

1) Only for $AUTO_{ADAPT}$.

Above recommendations are based on:
Agitators running in normal operation should be checked every 3000 operating hours or at least once a year.
If the stirred liquid is very muddy or sandy, check the pump at shorter intervals.

109. Recommended spare parts: SE1/SEV and SL1/SLV 1.1 to 11 kW

Customer Information

50/60 Hz

Project title:	Customer name:
Reference number:	Customer number:
Customer contact:	Customer phone number: (____)
	Fax number: (____)

Pump information	**Quotation made by**
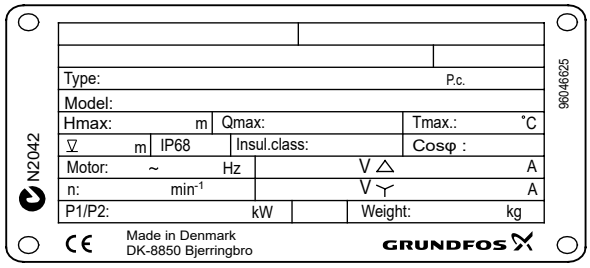	Company name:
	Prepared by:
	Phone number: (____)
	Fax number: (____)
	Date: Page 1 of:
	Quote number:

Recommended spare parts

	Recommended service parts						
	1 pump		2 to 3 pumps		4 to 7 pumps		
Kit-spare-bulk	2 years units per pump	5 years units per pump	2 years units per pump	5 years units per pump	2 years units per pump	5 years units per pump	Product number
Kit, Shaft seal	1	2	2	3	4	8	
Kit, O-ring	1	2	2	3	4	8	
Kit, Impeller fixing	0	1	0	2	0	4	
Kit, Wear ring	1	1	2	2	4	4	
Kit, Impeller	0	1	0	2	0	4	
Kit, Bearing	0	1	0	2	0	4	
Kit, smart seal for auto coupling	0	1	0	2	0	4	
Spare, Pump Housing	0	1	0	2	0	4	

110. Recommended spare parts: SL1, SLV 0.9-1.5 kW

50/60 Hz

Customer Information

Project title:	Customer name:
Reference number:	Customer number:
Customer contact:	Customer phone number: (____)
	Fax number: (____)

Pump information

Type			Prod. No.		
P.c.	ø mm		No.		
▽	T °C		IP	Insul. class:	
Model	Pol	Hz			V
P_1/P_2 kW	I_N A		I_{Start} A	n_N	/min
Cosφ			Weight		kg
Ex					

GRUNDFOS
CH-6105 Schachen

Quotation made by

Company name:
Prepared by: (____)
Phone number:
Fax number: (____)
Date:
Quote number:

Recommended spare parts

	Recommended service parts						
	1 pump		2 to 3 pumps		4 to 7 pumps		
Kit - Spare - Bulk	2 years units per pump	5 years units per pump	2 years units per pump	5 years units per pump	2 years units per pump	5 years units per pump	Product number
Kit, Shaft seal	1	2	2	3	4	8	
Kit, O-ring	1	2	2	3	4	8	
Kit, Impeller	0	1	0	2	0	4	
Kit, Bearing	0	1	0	2	0	4	
Kit, Dry-running sensor [1)]	0	1	0	1	0	1	
Kit, level sensor [1)]	0	1	0	1	0	1	
Oil [2)]	0	1	0	1	0	1	

1) Only for AUTO$_{ADAPT}$.

2) See service instruction for amount and type.

Above recommendations are based on:
Agitators running in normal operation should be checked every 3000 operating hours or at least once a year.
If the stirred liquid is very muddy or sandy, check the pump at shorter intervals.

111. Recommended spare parts: SMD, SMG, SFG, SRG

50/60 Hz

Customer Information

Project title:	Customer name:
Reference number:	Customer number:
Customer contact:	Customer phone number: (____)
	Fax number: (____)

Pump information

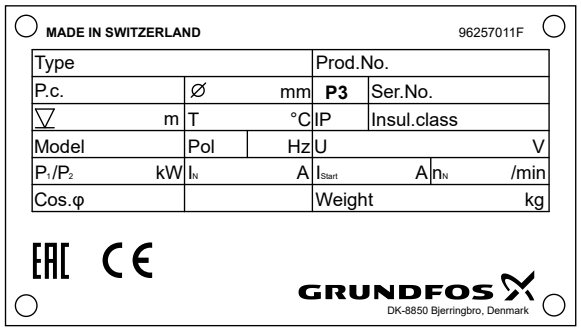

Quotation made by

Company name:
Prepared by: (____
Phone number:)
Fax number: (____
Date:)
Quote number:

Recommended spare parts

	Recommended service parts				
	SMD		SMG, SFG, SRG		
Kit - Spare - Bulk	2 years units per pump	5 years units per pump	2 years units per pump	5 years units per pump	Product number
Kit, Gasket		1		1	
Kit, Bearing motor		1		1	
Kit, Radial sealing			2	4	
Kit, Wear ring	2	4			
Kit, Shaft seal	1	2		1	

Above recommendations are based on:
Agitators running in normal operation should be checked every 3000 operating hours or at least once a year.
If the stirred liquid is very muddy or sandy, check the pump at shorter intervals.

112. Recommended spare parts: SP 17, 30, 46, 60, 77, 95, 125, 160, 215

50/60 Hz, Model B

Recommended spare parts for two to five years' operating time

Type	Wear parts kit	Wear parts kit
	Standard	N-version
SP 17 1-5 (N) (R)	*96421723*	*96421723*
SP 17 6-16 (N) (R)	*96421724*	*96421724*
SP 17 17-26 (N) (R)	*96421725*	*96421725*
SP 17 27-40 (N) (R)	*96440238*	*96440238*
SP 30 1-5 (N) (R)	*96421732*	*96421732*
SP 30 6-16 (N) (R)	*96421733*	*96421733*
SP 30 17-27 (N) (R)	*96421734*	*96421734*
SP 30 28-35 (N) (R)	*96440246*	*96440246*
SP 46 2-6 (N) (R)	*96440248*	*96440248*
SP 46 7-10 (N) (R)	*96440250*	*96440250*
SP 46 11-16 (N) (R)	*96440252*	*96440252*
SP 46 17-24 (N) (R)	*96440254*	*96440254*
SP 60 2-6 (N) (R)	*96440369*	*96440369*
SP 60 7-10 (N) (R)	*96440371*	*96440371*
SP 60 11-16 (N) (R)	*96440373*	*96440373*
SP 60 17-22 (N) (R)	*96440375*	*96440375*
SP 77 1-8 (N)	*96440256*	*96440256*
SP 77 9-14 (N)	*96440258*	*96440258*
SP 77 15-20 (N)	*96440260*	*96440260*
SP 95 1-8 (N)	*96440715*	*96440715*
SP 95 9-14 (N)	*96440716*	*96440716*
SP 95 15-20 (N)	*96440717*	*96440717*
SP 125 1-4 (N) (R)	*96440262*	*96440262*
SP 125 5-6 (N) (R)	*96440264*	*96440264*
SP 125 7-10 (N) (R)	*96440266*	*96440266*
SP 160 1-5 (N)	*205117*	*205117*
SP 160 6-9 (N)	*205118*	*205118*
SP 215 1-2 (N)	*185033*	*185033*
SP 215 3-4 (N)	*185034*	*185034*
SP 215 5-7 (N)	*185035*	*185035*
SP 215 8-10 (N)	*185036*	*185036*

Cable termination kit (shrink-flex)

Kit No	*116251*	*116252*	*116255*	*116253*	*116254*	*116257*	*116258*	*116256*
Cable type		**Flat cable**		**Three single conductors**		**Four single conductors**		**One single conductor**
mm^2	1.5 - 6	6 - 16	16 - 25	1.5 - 6	10 - 25	1.5 - 4	6 - 16	35 - 120

Number of pumps	Number of wear parts kits	Motor complete	Motor cable	Cable termination kit
1-2	1	1	1	1
3-5	2	1	1	1
6-10	3	1	1	1
11-20	4	2	2	2

Example: Spare parts for four SP 46-10, standard version

2 wear parts kits: *96440250*

1 motor complete (see part number in data booklet)

1 motor cable (see part number in data booklet)

1 cable termination kit (see part number in table above)

113. Recommended spare parts: SRP

50/60 Hz

Recommended spare parts for two to five years' operating time

SRP.30.30.xxx to SRP.70.30.xxx

Two years	Five years	Part number	Description
Quantity			
-	1	*95065484*	Sealing kit
-	1	*95065458*	Bearing kit, motor
2	4	*95065461*	Radial sealing kit
-	1	*95065462*	Shaft seal kit

SRP.35.50.xxx to SRP.50.50.xxx

Two years	Five years	Part number	Description
Quantity			
-	1	*95065485*	Sealing kit
-	1	*95065458*	Bearing kit, motor
2	4	*95065461*	Radial sealing kit
-	1	*95065462*	Shaft seal kit

SRP.65.50.xxx to SRP.100.50.xxx

Two years	Five years	Part number	Description
Quantity			
-	1	*95065486*	Sealing kit
-	1	*96645955*	Bearing kit, motor
2	4	*95065469*	Radial sealing kit
-	1	*95065470*	Shaft seal kit

SRP.70.80.xxx to SRP.100.80.xxx, and SRP.130.80.xxx

Two years	Five years	Part number	Description
Quantity			
-	1	*95065488*	Sealing kit
-	1	*96645955*	Bearing kit, motor
2	4	*95065469*	Radial sealing kit
-	1	*95065470*	Shaft seal kit

SRP.120.80.xxx, and SRP.160.80.xxx to SRP.240.80.xxx

Two years	Five years	Part number	Description
Quantity			
-	1	*95065489*	Sealing kit
-	1	*95065474*	Bearing kit, motor
2	4	*95065477*	Radial sealing kit
-	1	*95065478*	Shaft seal kit

114. Recommended spare parts: TP, TPE, TPD, TPED

50/60 Hz, Series 100/200

Customer Information

Project title:	Customer name:
Reference number:	Customer number:
Customer contact:	Customer phone number: (____)
	Fax number: (____)

Pump information

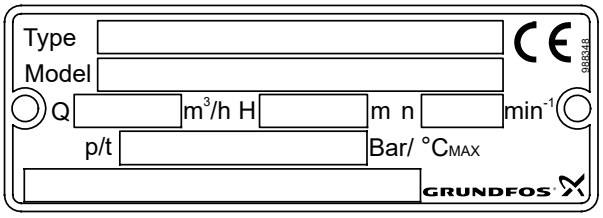

Quotation made by

Company name:

Prepared by:

Phone number: (____)

Fax number: (____)

Date: Page 1 of:

Quote number:

Recommended spare parts

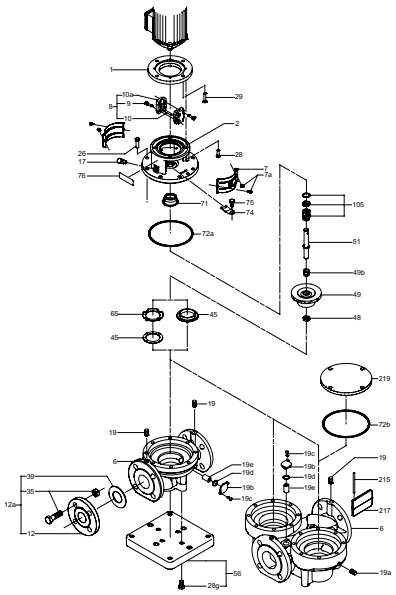

Spare part/service kit	Recommended spare parts/service kits for...		
	2 years operation	5 years operation	Product number of part/kit
Shaft seals	1 kit	2 kits	
Wear parts	1 kit	2 kits	

50/60 Hz, Series 300

Customer Information

Project title:	Customer name:
Reference number:	Customer number:
Customer contact:	Customer phone number: (____)
	Fax number: (____)

Pump information	Quotation made by
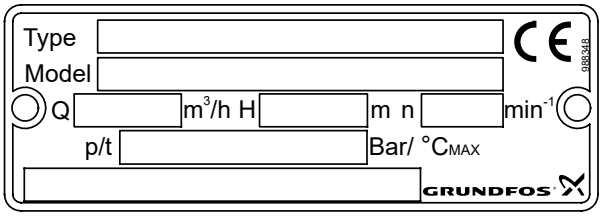	Company name:
	Prepared by:
	Phone number: (____)
	Fax number: (____)
	Date: Page 1 of:
	Quote number:

Recommended spare parts

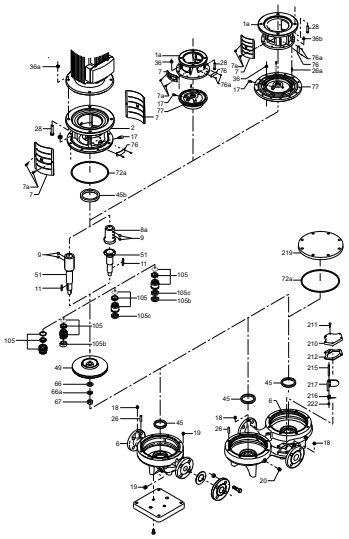

Spare part/service kit	Recommended spare parts/service kits for...		
	2 years operation	5 years operation	Product number of part/kit
Shaft seals	1 kit	2 kits	
O-ring kit	1 kit	2 kits	
Wear ring, pump housing	1 kit	2 kits	
Wear ring, cover	1 kit	2 kits	
Shaft	-	1 kit	
Impeller	-	1 pcs	
Nut, key and washer for impeller	-	1 kit	

115. Recommended spare parts: TPE2, TPE2 D, TPE3, TPE3 D

50/60 Hz

Customer Information

Project title:	Customer name:
Reference number:	Customer number:
Customer contact:	Customer phone number: (____)
	Fax number: (____)

Pump information

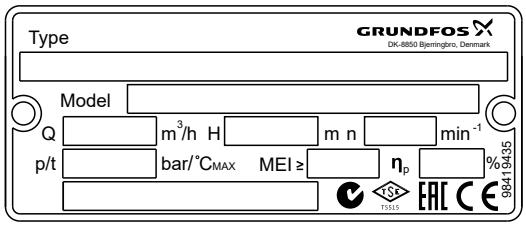

Quotation made by

Company name:

Prepared by:

Phone number: (____)

Fax number: (____)

Date: Page 1 of:

Quote number:

Recommended spare parts

Spare part/service kit	Recommended spare parts/service kits for...		
	2 years operation	5 years operation	Product number of part/kit
O-ring kit	1 kit	1 kit	
Shaft seal kit	1 kit	2 kits	
Vent plug	-	1 kit	
Clamp kit	-	1 kit	
Impeller kit	-	1 kit	
Two way flap kit (Only TPE2 D, TPE3 D)	-	1 kit	

Argentina
Bombas GRUNDFOS de Argentina S.A.
Ruta Panamericana km. 37.500industin
1619 - Garín Pcia. de B.A.
Tel.: +54-3327 414 444
Fax: +54-3327 45 3190

Australia
GRUNDFOS Pumps Pty. Ltd.
P.O. Box 2040
Regency Park
South Australia 5942
Tel.: +61-8-8461-4611
Fax: +61-8-8340-0155

Austria
GRUNDFOS Pumpen Vertrieb Ges.m.b.H.
Grundfosstraße 2
A-5082 Grödig/Salzburg
Tel.: +43-6246-883-0
Fax: +43-6246-883-30

Belgium
N.V. GRUNDFOS Bellux S.A.
Boomsesteenweg 81-83
B-2630 Aartselaar
Tel.: +32-3-870 7300
Fax: +32-3-870 7301

Belarus
Представительство ГРУНДФОС в Минске
220125, Минск
ул. Шафарнянская, 11, оф. 56, БЦ «Порт»
Тел.: +375 17 397 397 3
+375 17 397 397 4
Факс: +375 17 397 397 1
E-mail: minsk@grundfos.com

Bosnia and Herzegovina
GRUNDFOS Sarajevo
Zmaja od Bosne 7-7A
BiH-71000 Sarajevo
Tel.: +387 33 592 480
Fax: +387 33 590 465
www.ba.grundfos.com
E-mail: grundfos@bih.net.ba

Brazil
BOMBAS GRUNDFOS DO BRASIL
Av. Humberto de Alencar Castelo Branco, 630
CEP 09850 - 300
São Bernardo do Campo - SP
Tel.: +55-11 4393 5533
Fax: +55-11 4343 5015

Bulgaria
Grundfos Bulgaria EOOD
Slatina District
Iztochna Tangenta street no. 100
BG - 1592 Sofia
Tel.: +359 2 49 22 200
Fax: +359 2 49 22 201
E-mail: bulgaria@grundfos.bg

Canada
GRUNDFOS Canada inc.
2941 Brighton Road
Oakville, Ontario
L6H 6C9
Tel.: +1-905 829 9533
Fax: +1-905 829 9512

China
GRUNDFOS Pumps (Shanghai) Co. Ltd.
10F The Hub, No. 33 Suhong Road
Minhang District
Shanghai 201106 PRC
Tel.: +86 21 612 252 22
Fax: +86 21 612 253 33

Columbia
GRUNDFOS Colombia S.A.S.
Km 1.5 vía Siberia-Cota Conj. Potrero Chico,
Parque Empresarial Arcos de Cota Bod. 1A.
Cota, Cundinamarca
Tel.: +57(1)-2913444
Fax: +57(1)-8764586

Croatia
GRUNDFOS CROATIA d.o.o.
Buzinski prilaz 38, Buzin
HR-10010 Zagreb
Tel.: +385 1 6595 400
Fax: +385 1 6595 499
www.hr.grundfos.com

Czech Republic
GRUNDFOS Sales Czechia and Slovakia s.r.o.
Čajkovského 21
779 00 Olomouc
Tel.: +420-585-716 111

Denmark
GRUNDFOS DK A/S
Martin Bachs Vej 3
DK-8850 Bjerringbro
Tel.: +45-87 50 50 50
Fax: +45-87 50 51 51
E-mail: info_GDK@grundfos.com
www.grundfos.com/DK

Estonia
GRUNDFOS Pumps Eesti OÜ
Peterburi tee 92G
11415 Tallinn
Tel.: + 372 606 1690
Fax: + 372 606 1691

Finland
OY GRUNDFOS Pumput AB
Trukkikuja 1
FI-01360 Vantaa
Tel.: +358-(0) 207 889 500

France
Pompes GRUNDFOS Distribution S.A.
Parc d'Activités de Chesnes
57, rue de Malacombe
F-38290 St. Quentin Fallavier (Lyon)
Tel.: +33-4 74 82 15 15
Fax: +33-4 74 94 10 51

Germany
GRUNDFOS GMBH
Schlüterstr. 33
40699 Erkrath
Tel.: +49-(0) 211 929 69-0
Fax: +49-(0) 211 929 69-3799
E-mail: infoservice@grundfos.de
Service in Deutschland:
kundendienst@grundfos.de

Greece
GRUNDFOS Hellas A.E.B.E.
20th km. Athinon-Markopoulou Av.
P.O. Box 71
GR-19002 Peania
Tel.: +0030-210-66 83 400
Fax: +0030-210-66 46 273

Hong Kong
GRUNDFOS Pumps (Hong Kong) Ltd.
Unit 1, Ground floor, Siu Wai industrial Centre
29-33 Wing Hong Street & 68 King Lam Street, Cheung Sha Wan
Kowloon
Tel.: +852-27861706 / 27861741
Fax: +852-27858664

Hungary
GRUNDFOS Hungária Kft.
Tópark u. 8
H-2045 Törökbálint
Tel.: +36-23 511 110
Fax: +36-23 511 111

India
GRUNDFOS Pumps india Private Limited
118 Old Mahabalipuram Road
Thoraipakkam
Chennai 600 097
Tel.: +91-44 2496 6800

Indonesia
PT GRUNDFOS Pompa
Graha intirub Lt. 2 & 3
Jln. Cililitan Besar No.454. Makasar,
Jakarta Timur
ID-Jakarta 13650
Tel.: +62 21-469-51900
Fax: +62 21-460 6910 / 460 6901

Ireland
GRUNDFOS (Ireland) Ltd.
Unit A, Merrywell Business Park
Ballymount Road Lower
Dublin 12
Tel.: +353-1-4089 800
Fax: +353-1-4089 830

Italy
GRUNDFOS Pompe Italia S.r.l.
Via Gran Sasso 4
I-20060 Truccazzano (Milano)
Tel.: +39-02-95838112
Fax: +39-02-95309290 / 95838461

Japan
GRUNDFOS Pumps K.K.
1-2-3, Shin-Miyakoda, Kita-ku
Hamamatsu
431-2103 Japan
Tel.: +81 53 428 4760
Fax: +81 53 428 5005

Korea
GRUNDFOS Pumps Korea Ltd.
6th Floor, Aju Building 679-5
Yeoksam-dong, Kangnam-ku, 135-916
Seoul, Korea
Tel.: +82-2-5317 600
Fax: +82-2-5633 725

Latvia
SIA GRUNDFOS Pumps Latvia
Deglava biznesa centrs
Augusta Deglava ielā 60
LV-1035, Rīga,
Tel.: + 371 714 9640, 7 149 641
Fax: + 371 914 9646

Lithuania
GRUNDFOS Pumps UAB
Smolensko g. 6
LT-03201 Vilnius
Tel.: + 370 52 395 430
Fax: + 370 52 395 431

Malaysia
GRUNDFOS Pumps Sdn. Bhd.
7 Jalan Peguam U1/25
Glenmarie industrial Park
40150 Shah Alam, Selangor
Tel.: +60-3-5569 2922
Fax: +60-3-5569 2866

Mexico
Bombas GRUNDFOS de México S.A. de C.V.
Boulevard TLC No. 15
Parque industrial Stiva Aeropuerto
Apodaca, N.L. 66600
Tel.: +52-81-8144 4000
Fax: +52-81-8144 4010

Netherlands
GRUNDFOS Netherlands
Veluwezoom 35
1326 AE Almere
Postbus 22015
1302 CA ALMERE
Tel.: +31-88-478 6336
Fax: +31-88-478 6332
E-mail: info_gnl@grundfos.com

New Zealand
GRUNDFOS Pumps NZ Ltd.
17 Beatrice Tinsley Crescent
North Harbour Industrial Estate
Albany, Auckland
Tel.: +64-9-415 3240
Fax: +64-9-415 3250

Norway
GRUNDFOS Pumper A/S
Strømsveien 344
Postboks 235, Leirdal
N-1011 Oslo
Tel.: +47-22 90 47 00
Fax: +47-22 32 21 50

Poland
GRUNDFOS Pompy Sp. z o.o.
ul. Klonowa 23
Baranowo k. Poznania
PL-62-081 Przeźmierowo
Tel.: (+48-61) 650 13 00
Fax: (+48-61) 650 13 50

Portugal
Bombas GRUNDFOS Portugal, S.A.
Rua Calvet de Magalhães, 241
Apartado 1079
P-2770-153 Paço de Arcos
Tel.: +351-21-440 76 00
Fax: +351-21-440 76 90

Romania
GRUNDFOS Pompe România SRL
S-PARK BUSINESS CENTER, Clădirea A2, etaj 2
Str. Tipografilor, Nr. 11-15, Sector 1, Cod 013714
Bucuresti, Romania
Tel.: 004 021 2004 100
E-mail: romania@grundfos.ro

Russia
ООО Грундфос Россия
ул. Школьная, 39-41
Москва, RU-109544, Russia
Тел. (+7) 495 564-88-00 (495) 737-30-00
Факс (+7) 495 564 8811
E-mail grundfos.moscow@grundfos.com

Serbia
Grundfos Srbija d.o.o.
Omladinskih brigada 90b
11070 Novi Beograd
Tel.: +381 11 2258 740
Fax: +381 11 2281 769
www.rs.grundfos.com

Singapore
GRUNDFOS (Singapore) Pte. Ltd.
25 Jalan Tukang
Singapore 619264
Tel.: +65-6681 9688
Faxax: +65-6681 9689

Slovakia
GRUNDFOS s.r.o.
Prievozská 4D 821 09 BRATISLAVA
Tel.: +421 2 5020 1426
sk.grundfos.com

Slovenia
GRUNDFOS LJUBLJANA, d.o.o.
Leskoškova 9e, 1122 Ljubljana
Tel.: +386 (0) 1 568 06 10
Fax: +386 (0)1 568 06 19
E-mail: tehnika-si@grundfos.com

South Africa
GRUNDFOS (PTY) LTD
16 Lascelles Drive, Meadowbrook Estate
1609 Germiston, Johannesburg
Tel.: (+27) 10 248 6000
Fax: (+27) 10 248 6002
E-mail: lgradidge@grundfos.com

Spain
Bombas GRUNDFOS España S.A.
Camino de la Fuentecilla, s/n
E-28110 Algete (Madrid)
Tel.: +34-91-848 8800
Fax: +34-91-628 0465

Sweden
GRUNDFOS AB
Box 333 (Lunnagårdsgatan 6)
431 24 Mölndal
Tel.: +46 31 332 23 000
Fax: +46 31 331 94 60

Switzerland
GRUNDFOS Pumpen AG
Bruggacherstrasse 10
CH-8117 Fällanden/ZH
Tel.: +41-44-806 8111
Fax: +41-44-806 8115

Taiwan
GRUNDFOS Pumps (Taiwan) Ltd.
7 Floor, 219 Min-Chuan Road
Taichung, Taiwan, R.O.C.
Tel.: +886-4-2305 0868
Fax: +886-4-2305 0878

Thailand
GRUNDFOS (Thailand) Ltd.
92 Chaloem Phrakiat Rama 9 Road
Dokmai, Pravej, Bangkok 10250
Tel.: +66-2-725 8999
Fax: +66-2-725 8998

Turkey
GRUNDFOS POMPA San. ve Tic. Ltd. Sti.
Gebze Organize Sanayi Bölgesi
Ihsan dede Caddesi
2. yol 200. Sokak No. 204
41490 Gebze/ Kocaeli
Tel.: +90 - 262-679 7979
Fax: +90 - 262-679 7905
E-mail: satis@grundfos.com

Ukraine
ТОВ "ГРУНДФОС УКРАЇНА"
Бізнес Центр Європа
Столичне шосе, 103
м. Київ, 03131, Україна
Tel.: (+38 044) 237 04 00
Fax: (+38 044) 237 04 01
E-mail: ukraine@grundfos.com

United Arab Emirates
GRUNDFOS Gulf Distribution
P.O. Box 16768
Jebel Ali Free Zone, Dubai
Tel.: +971 4 8815 166
Fax: +971 4 8815 136

United Kingdom
GRUNDFOS Pumps Ltd.
Grovebury Road
Leighton Buzzard/Beds. LU7 4TL
Tel.: +44-1525-850000
Fax: +44-1525-850011

U.S.A.
Global Headquarters for WU
856 Koomey Road
Brookshire, Texas 77423 USA
Phone: +1-630-236-5500

Uzbekistan
Grundfos Tashkent, Uzbekistan
The Representative Office of Grundfos
Kazakhstan in Uzbekistan
38a, Oybek street, Tashkent
Tel.: (+998) 71 150 3290 / 71 150 3291
Fax: (+998) 71 150 3292

96488862 06.2022

GRUNDFOS Holding A/S
Poul Due Jensens Vej 7
DK-8850 Bjerringbro
Tel: +45 87 50 14 00
www.grundfos.com

Trademarks displayed in this material, including but not limited to Grundfos and the Grundfos logo, are registered trademarks owned by The Grundfos Group. © 2022 Grundfos Holding A/S, all rights reserved.