FORM 1615D

PUMP SECTION

Centrifugal Pumps, Type RB09 - Base Mounted, End Suction

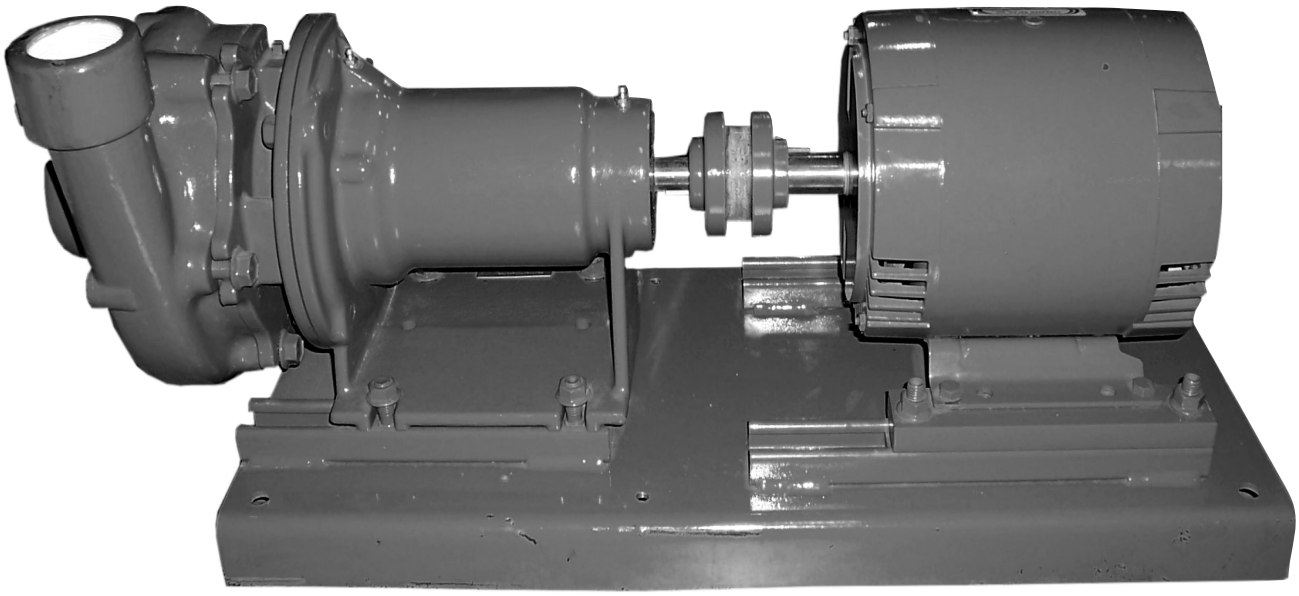

General Service Pumps
Flows to 500 GPM, 170 PSI

FEATURES

The MEPCO Model RB Series Pumps meet the latest standards for hydraulic performance and dimensional characteristics. Model RB Pumps are provided with the unique Space Base to minimize misalignment and facilitate maintenance. The guide rail design of the Space Base allows the pump and motor to be easily slid in and out of place for servicing. The Space Base eliminates the need for expensive spacer couplings which complicate the alignment process. The Space Base also provides ample open space for easy grouting.

BASE FEATURES

- Steel construction provides for rigid base installation.
- Ample open space for easy grouting
- Unique guide rail design allows pump and motor to be slid in and out of place for easy service while minimizing misalignment.

The mechanical seal is constructed of Buna N and is rated for 250 degrees Fahrenheit and pressures up to 175 PSI with ceramic seat and carbon seal face for long trouble free service. Alternative seals are available to suit other temperatures and liquids.

DESIGN FEATURES

- Dry shaft design ensures shaft is never exposed to the system fluid.
- Simplifies sleeve and seal removal/reassembly.
- Easy-to-replace slip-on shaft sleeve facilitates seal maintenance costs.

BEARING ASSEMBLY FEATURE

- Ball bearing with minimum of 50,000 hours of bearing life at worse case (3450 RPM). Maximum bearing life (1750 RPM) exceeds 50,000 hours.

The advanced impeller design maximizes hydraulic efficiency. Each impeller is dynamically balanced for vibration free operation. Model RB Pumps are ideally suited for a variety of applications, including heating, air conditioning, pressure boosting, cooling water transfer, and water supply.

Rear pull out design allows pump to be serviced without disturbing the system piping.

The standardization and interchangeability for the RB Series Pump line results in reduced parts inventories and lower costs for multiple pump installations.

MAXIMUM OPERATING CONDITIONS

Based on std. construction & pumping clear water

RPM -	1750, 3450
HORSEPOWER -	60
STD. SEAL TEMP. -	250° F
OPT. SEAL TEMP. -	300° F
OPT. SEAL TEMP. -	400° F
MODEL RB -	150 LB. FLANGES
MAX. WORKING PRESS -	175 PSI
HYDROSTATIC TEST PRESSURE -	265 PSI

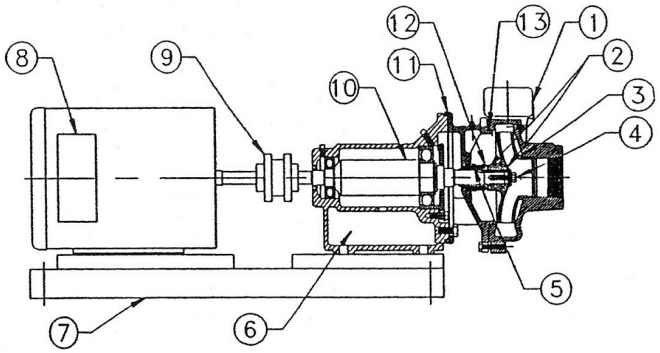

	MOTOR DATA (HP)							
	ODP				TEFC			
	1 PHASE		3 PHASE		1 PHASE		3 PHASE	
FRAME	1750 RPM	3500 RPM	1750 RPM	3500 RPM	1750 RPM	3500 RPM	1750 RPM	3500 RPM
143T	1	1 1/2	1	1 1/2	1	1 1/2	1	1 1/2
145T	1 1/2	2	1 1/2,2	2,3	1 1/2	2	1 1/2,2	2
182T	2	3	3	5	2	3	3	3
184T	3	5	5	7 1/2	3	5	5	5
213T	5	7 1/2	7 1/2	10	5	7 1/2	7 1/2	7 1/2
215T	7 1/2,10	10	–	15	7 1/2,10	10	–	10
254T	–	–	–	20	–	–	–	15
256T	–	–	–	25	–	–	–	20
284TS	–	–	–	30	–	–	–	25
286TS	–	–	–	40	–	–	–	30
324TS	–	–	–	50	–	–	–	40
326TS	–	–	–	60	–	–	–	50
364TS	–	–	–	–	–	–	–	60

MATERIAL LIST

AND AVAILABLE OPTIONS

NO.	ITEM	MATERIAL	OPTION
1	CASE	CLASS 30 C.I.	BRONZE
2	O-RING	BUNA N	EPT/VITON
3	IMPELLER	BRONZE	CAST IRON
4	BOLT	STEEL	BRONZE
5	MECH. SEAL	BUNA N	EPT/VITON
6	BEARING ASSY.	BALL TYPE	
7	BASE	STEEL	

NO.	ITEM	MATERIAL	OPTION
8	MOTOR	NEMA (ODP)	TEFC/XPROOF
9	COUPLING	FLEX	
10	SHAFT	STEEL	
11	ADAPTER	CLASS 30 C.I.	
12	SLEEVE	BRONZE	SST
13	O-RING	BUNA N	EPT/VITON

RAPID SELECTION CURVES

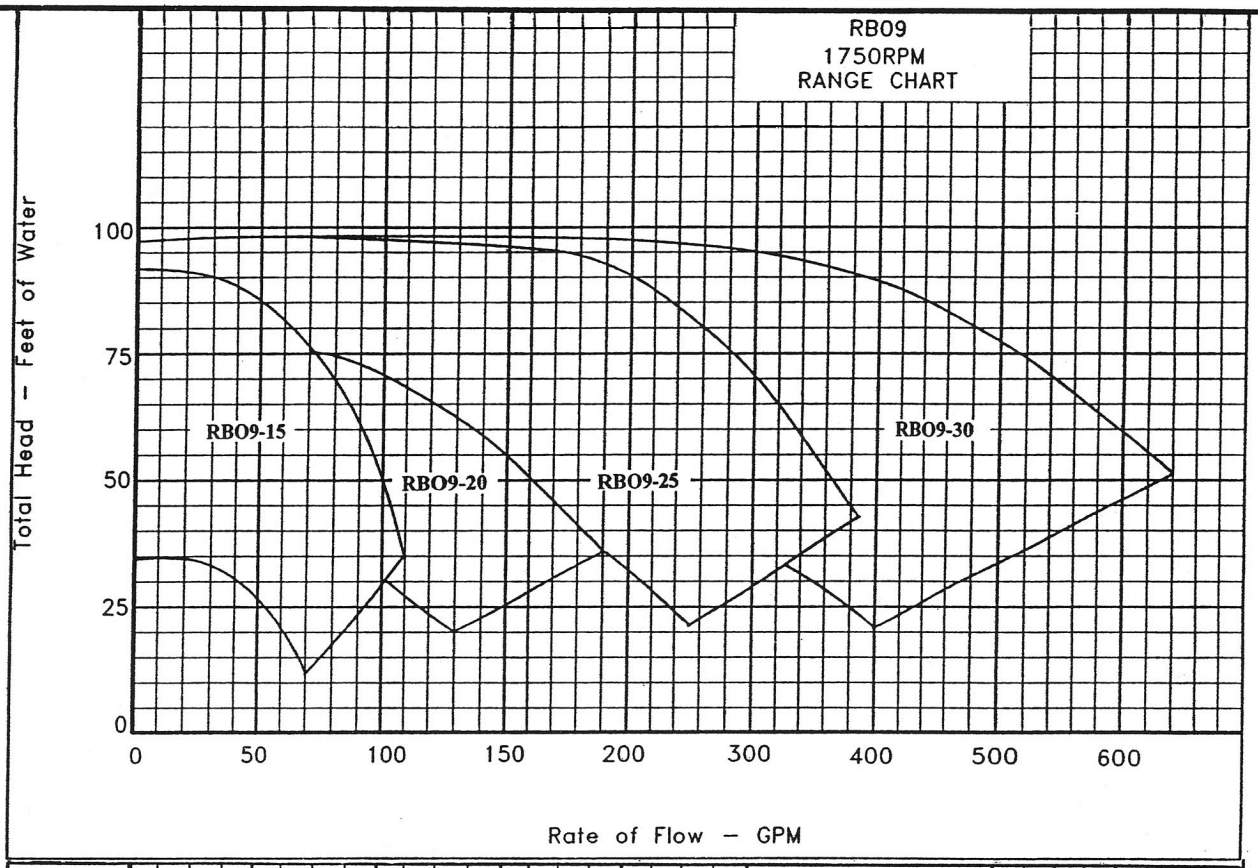

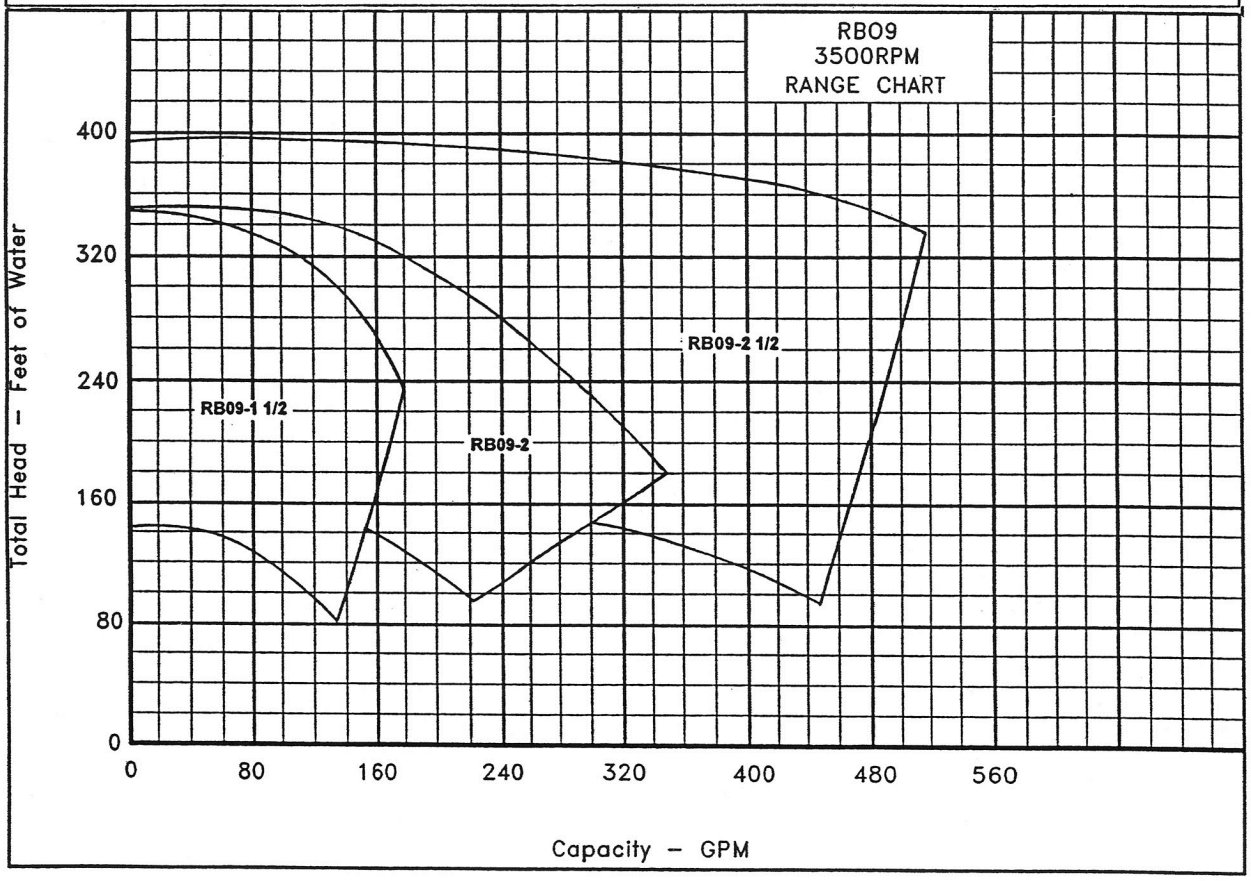

NOTE: Computerized pump selection program available, Pump Flo[tm]

DIMENSIONS

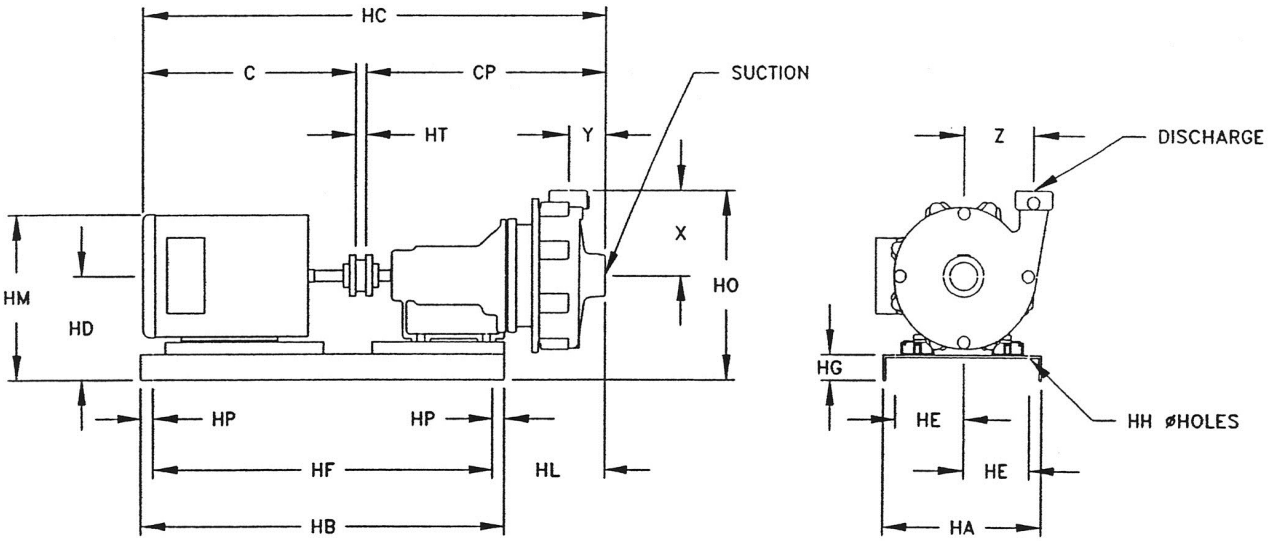

PUMP	MOTOR FRAME SIZE	DISC. NPT	SUCT. NPT	DIMENSIONS IN INCHES																	
				C	CP	HA	HB	HC	HD	HE	HF	HG	HH	HL	HM	HO	HP	HT	X	Y	Z
RB09 15	143T	1 1/2	2	12 9/16	19 5/8	13	30	32 1/2	8 1/4	5 1/2	28	2	ø9/16	9 1/16	11 5/8	15	1	3/8	6 3/4	3 1/16	5 7/8
	145T			14 1/4				34 7/16										5/8			
	182T			15 3/8				35 3/4							12 7/16			3/4			
	184T			16 5/8				37													
	213T			18				38 3/8							13 5/16			7/8			
	215T			19 1/4				39 5/8													
RB09 20	143T	2	2 1/2	12 9/16	20 3/4	13	30	33 11/16	8 1/4	5 1/2	28	2	ø9/16	10 1/4	11 5/8	15 3/4	1	3/8	7 1/2	4 1/16	6 1/16
	145T			14 1/4				35 5/8										5/8			
	182T			15 3/8				36 7/8							12 7/16			3/4			
	184T			16 5/8				38 3/16													
	213T			18				39 9/16							13 5/16			7/8			
	215T			19 1/4				40 13/16													
RB09 25	143T	ø2 1/2 FLANGE	ø3 FLANGE	12 9/16	20	13	30	32 15/16	8 1/4	5 1/2	28	2	ø9/16	9 1/2	11 5/8	15 7/16	1	3/8	7 3/16	3 1/16	6 1/16
	145T			14 1/4				34 7/8										5/8			
	182T			15 3/8				36 1/8							12 7/16			3/4			
	184T			16 5/8				37 7/16													
	213T			18				38 7/8							13 5/16			7/8			
	215T			19 1/4				40 1/16													
RB09 30	143T	ø3 FLANGE	ø4 FLANGE	12 9/16	20 5/8	13	30	33 9/16	8 1/4	5 1/2	28	2	ø9/16	10 1/8	11 5/8	15 15/16	1	3/8	7 11/16	3 7/16	7 3/16
	145T			14 1/4				35 1/2										5/8			
	182T			15 3/8				36 3/4							12 7/16			3/4			
	184T			16 5/8				38 1/16													
	213T			18				39 1/2							13 5/16			7/8			
	215T			19 1/4				40 3/4													

DIMENSIONS

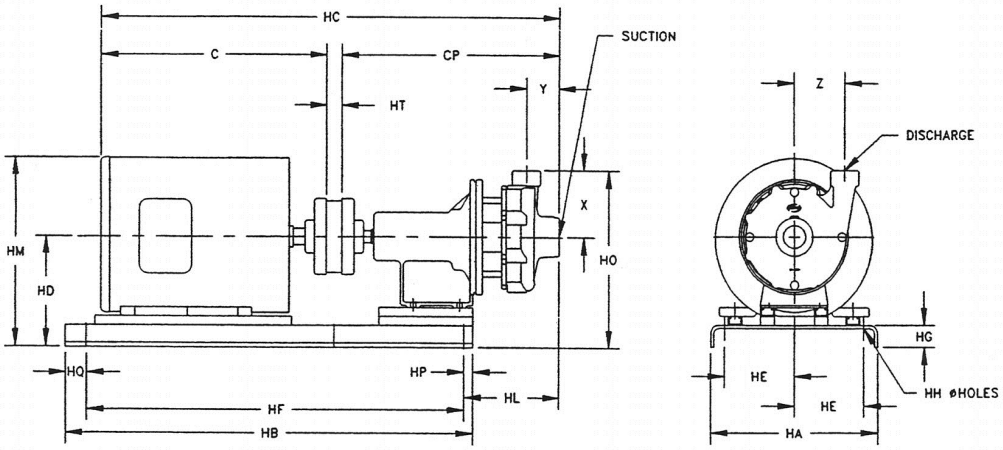

PUMP	MOTOR FRAME SIZE	DISC. NPT	SUCT. NPT	DIMENSIONS IN INCHES																		
				C	CP	HA	HB	HC	HD	HE	HF	HG	HH	HL	HM	HO	HP	HQ	HT	X	Y	Z
RB09 15	254T	1 1/2	2	21 11/16	24 1/2	19 3/4	48	47 3/16	12 1/2	8 1/4	44 1/2	2 1/2	ø5/8	10 1/16	19 1/8	19 1/4	1	2 1/2	1	6 3/4	3 1/16	5 7/8
	256T			23 3/16				48 11/16														
	284T			24 15/16				50 9/16							20 1/8				1 1/8			
	286T			25 1/16				50 11/16														
	324T			28 5/8				54 9/16							21				1 7/16			
	326T			28 1/2				54 7/16														
	364T			28 5/8				54 3/4							22 1/2				1 5/8			
	365T			29 5/8				55 3/4														
RB09 20	254T	2	2 1/2	21 11/16	25 5/8	19 3/4	48	48 5/16	12 1/2	8 1/4	44 1/2	2 1/2	ø5/8	11 3/16	19 1/8	20	1	2 1/2	1	7 1/2	4 1/16	6 1/16
	256T			23 3/16				49 13/16														
	284T			24 15/16				51 11/16							20 1/8				1 /8			
	286T			25 1/16				51 13/16														
	324T			25 5/8				55 11/16							21				1 7/16			
	326T			28 1/2				55 9/16														
	364T			28 5/8				55 7/8							22 1/2				1 5/8			
	365T			29 5/8				56 7/8														
RB09 25	254T	ø2 1/2 FLANGE	ø3 FLANGE	21 11/16	24 7/8	19 3/4	48	47 9/16	12 1/2	8 1/4	44 1/2	2 1/2	ø5/8	10 7/16	19 1/8	19 1/16	1	2 1/2	1	7 3/16	3 1/16	6 1/16
	256T			23 3/16				49 1/16														
	284T			24 15/16				50 15/16							20 1/8				1 1/8			
	286T			25 1/16				51 1/16														
	324T			25 5/8				54 15/16							21				1 7/16			
	326T			28 1/2				54 13/16														
	364T			28 5/8				55 1/8							22 1/2				1 5/8			
	365T			29 5/8				56 1/8														
RB09 30	254T	ø3 FLANGE	ø4 FLANGE	21 11/16	25 9/16	19 3/4	48	48 1/4	12 1/2	8 1/4	44 1/2	2 1/2	ø5/8	11 1/16	19 1/8	20 3/16	1	2 1/2	1	7 11/16	3 7/16	7 3/16
	256T			23 3/16				49 3/4														
	284T			24 15/16				51 5/8							20 1/8				1 1/8			
	286T			25 1/16				51 3/4														
	324T			25 5/8				55 5/8							21				1 7/16			
	326T			28 1/2				55 1/2														
	364T			28 5/8				55 7/8							22 1/2				1 5/8			
	365T			29 5/8				56 7/8														

DIMENSIONS CONTINUED

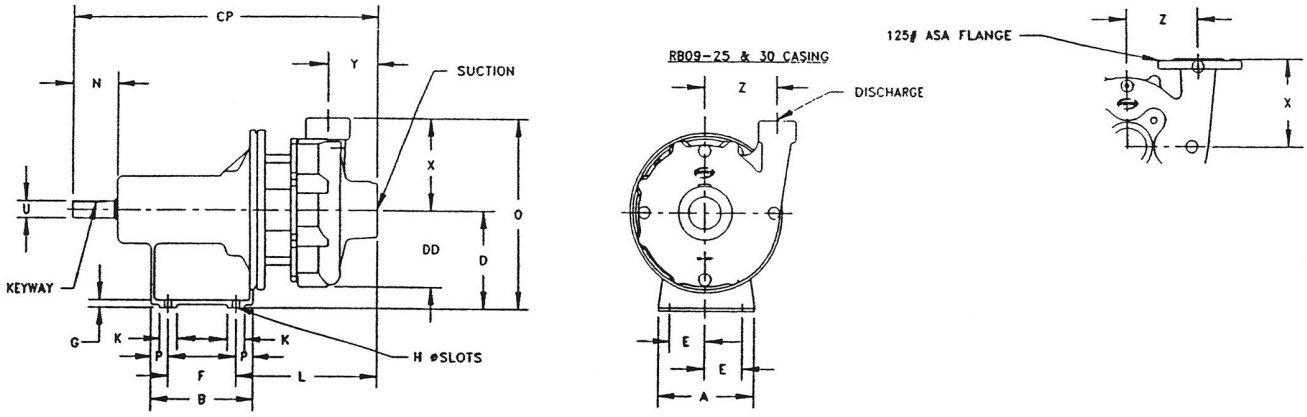

PUMP	DISC. NPT	SUCT. NPT	DIMENSIONS IN INCHES																	
			A	B	CP	D	DD	E	F	G	H	K	L	N	O	P	U	X	Y	Z
RB09 15	1 1/2	2	8	8 1/2	24 1/2	8	5 7/8	3	5 1/2	5/8	5/8	1 1/2	10 9/16	3 7/8	14 3/4	1 1/2	⌀1 3/8	6 3/4	3 1/16	5 7/8
RB09 20	2	2 1/2	8	8 1/2	25 5/8	8	6	3	5 1/2	5/8	5/8	1 1/2	11 11/16	3 7/8	15 1/2	1 1/2	⌀1 3/8	7 1/2	4 1/16	6 1/16
RB09 25	⌀2 1/2 FLANGE	⌀3 FLANGE	8	8 1/2	24 7/8	8	6 3/8	3	5 1/2	5/8	5/8	1 1/2	10 15/16	3 7/8	15 3/16	1 1/2	⌀1 3/8	7 3/16	3 1/16	6 1/16
RB09 30	⌀3 FLANGE	⌀4 FLANGE	8	8 1/2	25 9/16	8	6 11/16	3	5 1/2	5/8	5/8	1 1/2	11 5/8	3 7/8	15 11/16	1 1/2	⌀1 3/8	7 11/16	3 7/16	7 3/16

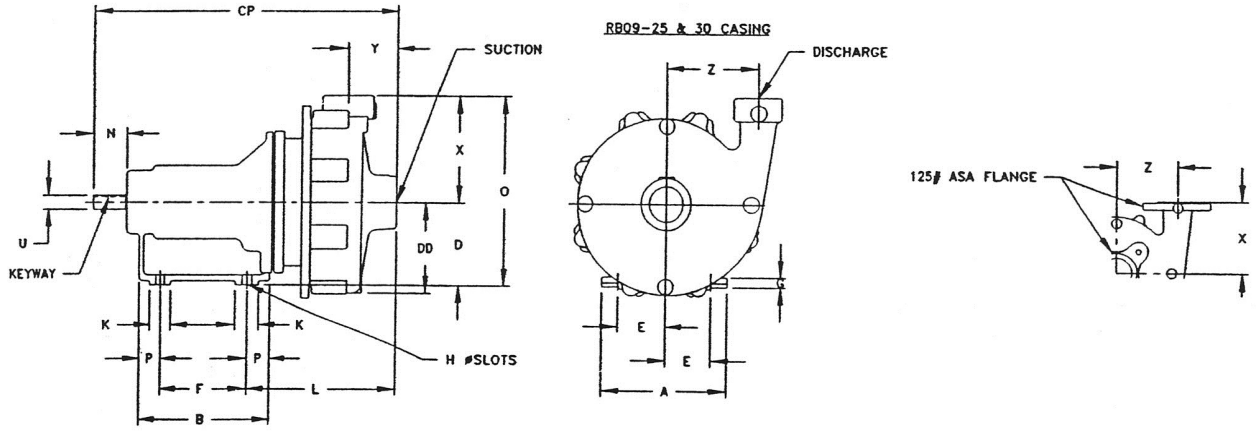

PUMP	MOTOR FRAME SIZE	DISC. NPT	SUCT. NPT	DIMENSIONS IN INCHES																	
				A	B	CP	D	DD	E	F	G	H	K	L	N	O	P	U	X	Y	Z
RB09 15	143T	1 1/2	2	8	8 1/2	19 9/16	5 1/4	5 7/8	3	5 1/2	5/8	5/8	1 1/2	9 9/16	2 1/8	12	1 1/2	⌀7/8	6 3/4	3 1/16	5 7/8
	145T																				
	182T																				
	184T																				
	213T																				
	215T																				
RB09 20	143T	2	2 1/2	8	8 1/2	20 3/4	5 1/4	6	3	5 1/2	5/8	5/8	1 1/2	10 3/4	2 1/8	12 3/4	1 1/2	⌀7/8	7 1/2	4 1/16	6 1/16
	145T																				
	182T																				
	184T																				
	213T																				
	215T																				
RB09 25	143T	⌀2 1/2 FLANGE	⌀3 FLANGE	8	8 1/2	20	5 1/4	6 3/8	3	5 1/2	5/8	5/8	1 1/2	10	2 1/8	12 1/2	1 1/2	⌀7/8	7 3/16	3 1/16	6 1/16
	145T																				
	182T																				
	184T																				
	213T																				
	215T																				
RB09 30	143T	⌀3 FLANGE	⌀4 FLANGE	8	8 1/2	20 5/8	5 1/4	6 11/16	3	5 1/2	5/8	5/8	1 1/2	10 5/8	2 1/8	12 1/2	1 1/2	⌀7/8	7 11/16	3 7/16	7 3/16
	145T																				
	182T																				
	184T																				
	213T																				
	215T																				

SELECTION CURVES

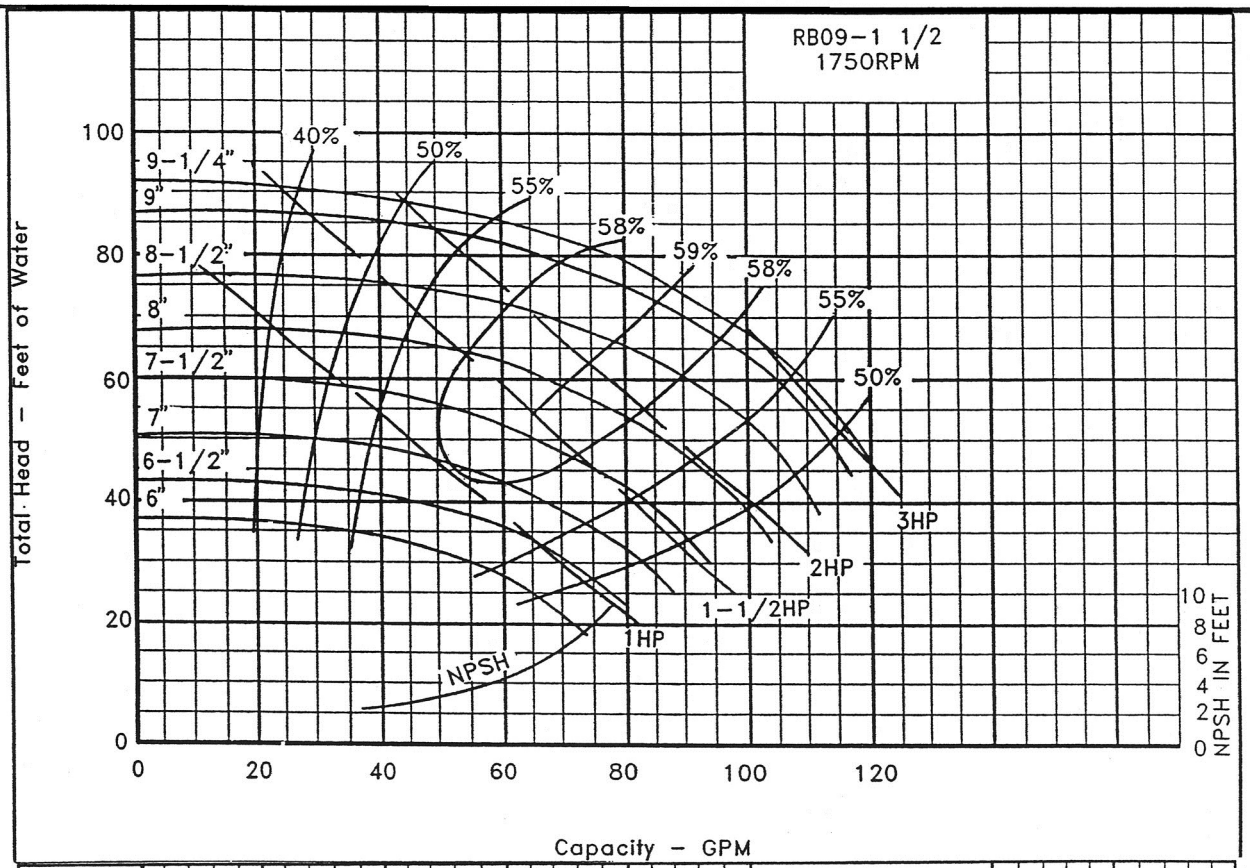

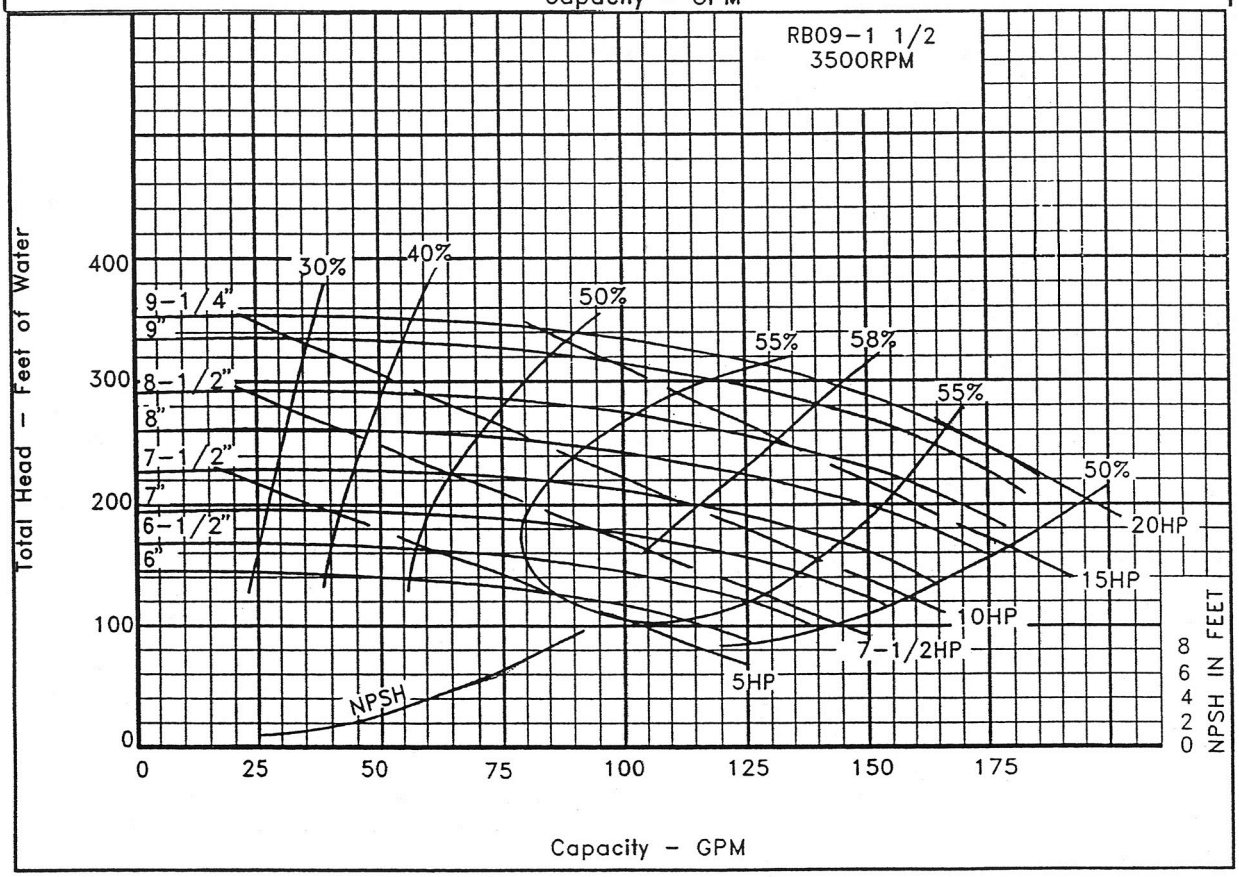

NOTE Computerized pump selection program available, Pump Flo™.

SELECTION CURVES

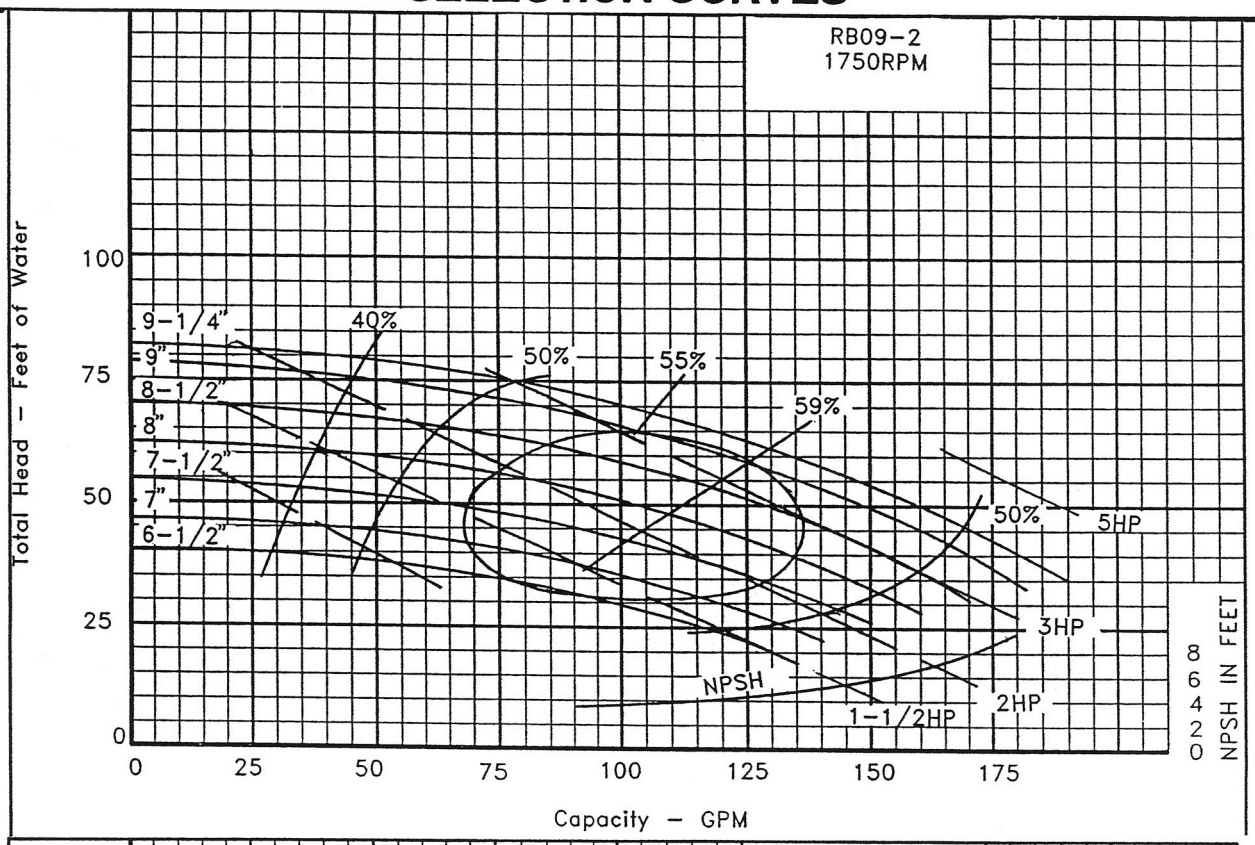

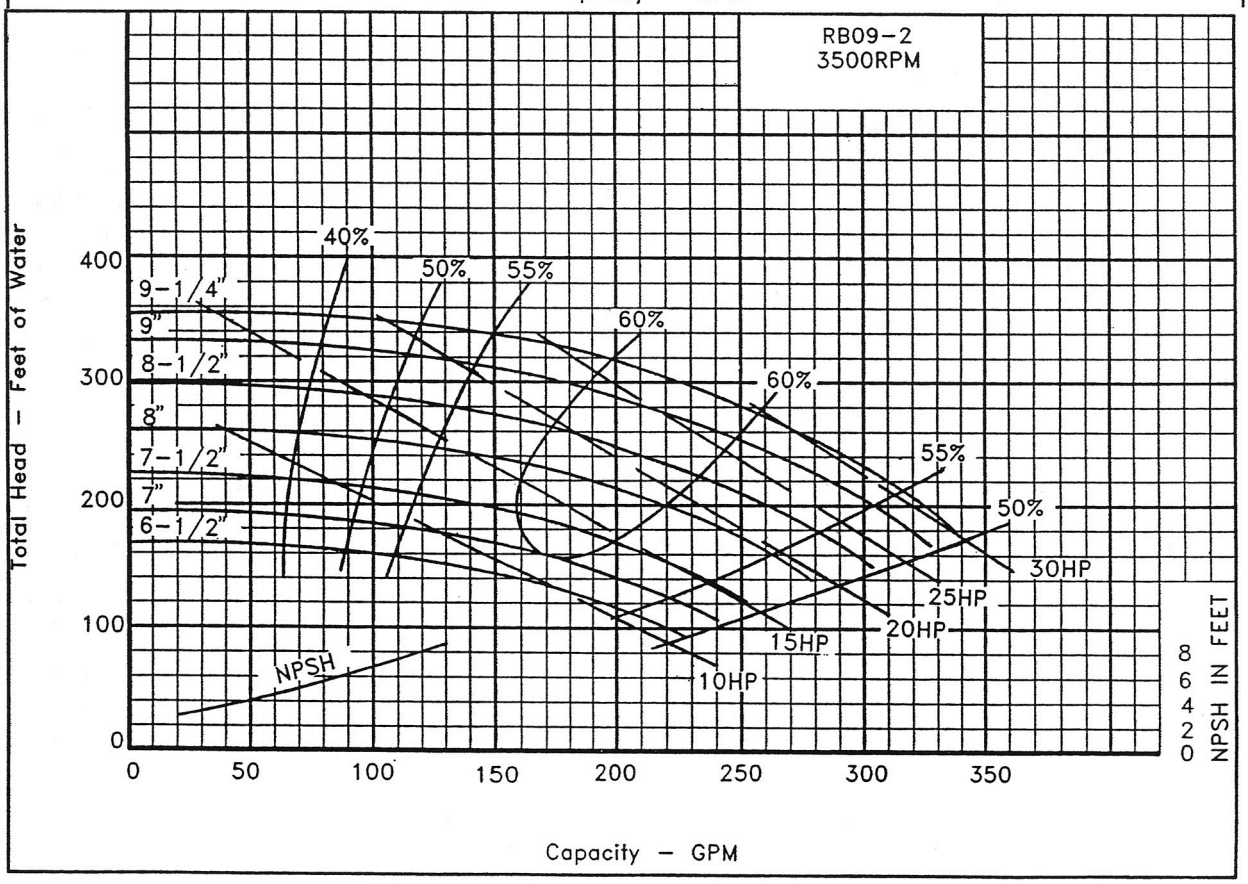

NOTE: 1) Computerized pump selection program available, Pump Flo™.

SELECTION CURVES

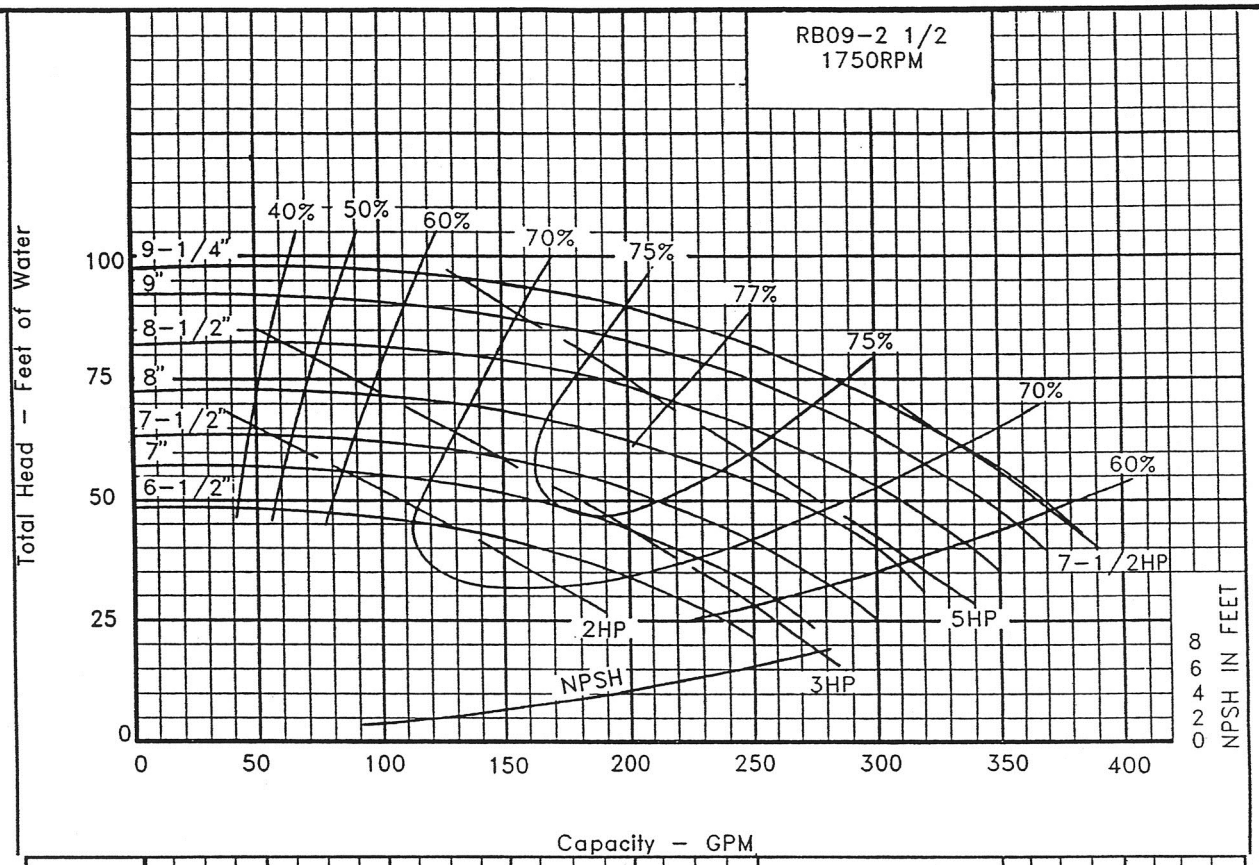

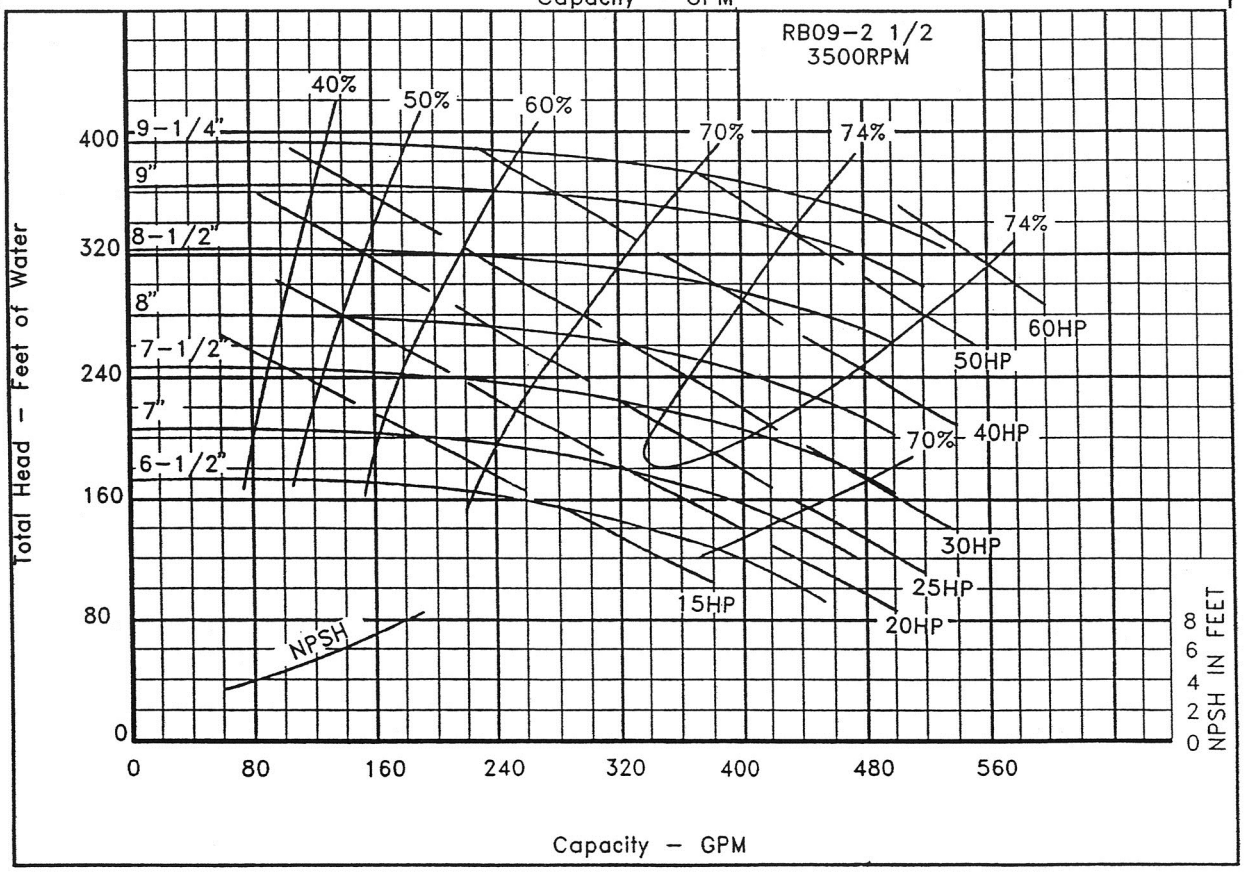

NOTE: 1) Computerized pump selection program available, Pump Flo[tm].

SELECTION CURVES

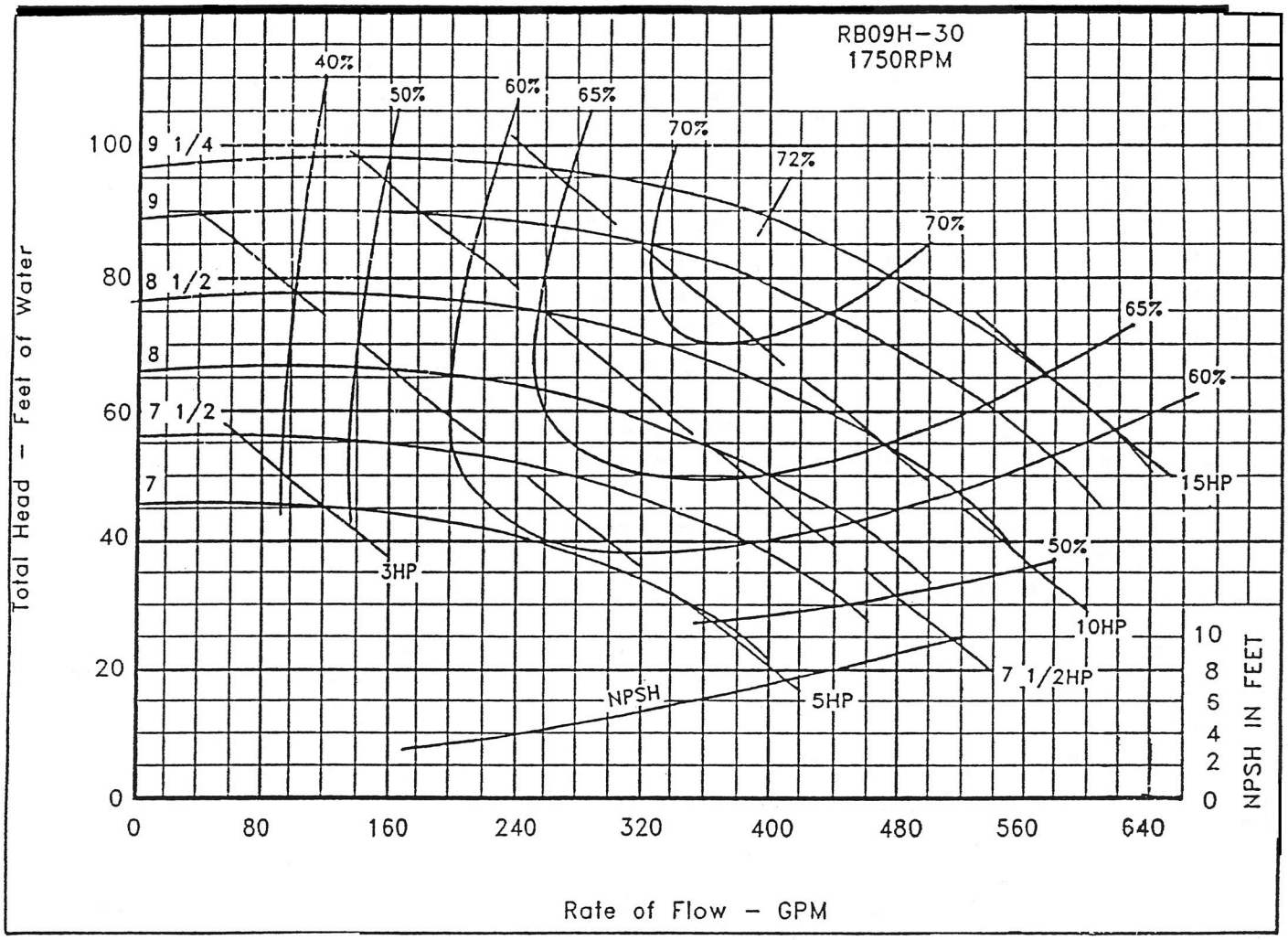

TYPICAL SPECIFICATIONS

Rating Class: 125 Class A
PRESSURE-TEMPERATURE RATINGS

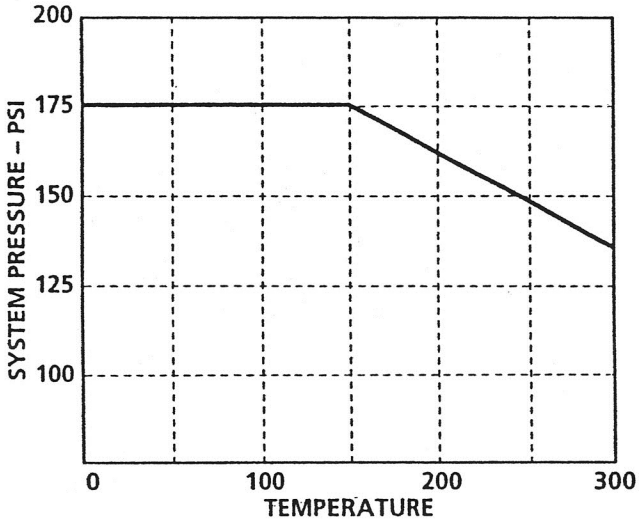

OPERATING SPECIFICATIONS		
	Standard	Optional
Pressure	175 PSIG*	
Temperature: Mechanical Seal	250F	300F

Motors: All NEMA Standard (T orTS)
* In accordance with ANSI Standard B16.1 Class 125

- Furnish and install centrifugal base mounted, end-suction, single stage pump(s) with capacities and characteristics as shown on plans. Pumps shall be MEPCO base mounted, Model RB or approved equal. Pump volute shall be Class 30 cast iron, and impeller shall be brass enclosed type, dynamically balanced.
- Shaft Seal shall be rated for minimum of 175 PSI working pressure. Casings shall have vent and drain ports at tip and bottom of the casing.
- Motor shall meet NEMA specifications and shall be of the size, voltage and enclosure called for on the plans. It shall have heavy-duty ball bearings and stainless steel shaft.
- Each pump shall be factory tested and thoroughly cleaned and painted with high grade lacquer prior to shipment.
- Each pump shall be checked by the contractor and regulated for proper differential pressure, voltage and amperage draw. This data shall be noted on a permanent tag or label and fastened to pump for owner's reference.
- The base shall be made of structural steel and incorporate a guide rail system to allow the pump and motor to be slid apart for service without risking major misalignment or disturbing the piping. A flexible coupler shall connect the pump to the motor and shall be covered by a coupler guard. Contractor shall level and grout each pump according to the manufacturers recommendations to insure proper alignment prior to operation.

3695 44th Street SE, Grand Rapids, Michigan 49512 Phone
616.971.3420 Fax 616.971.3421www.mepcollc.com

FORM 1615D

PRINTED IN U.S.A.